Declassified in Part - Sanitized Copy Approved for Release 2012/07/02 : CIA-RDP02-06298R000900050017-2

MATERIAL LIST

WORKS NO. TS81107 D.O. NO. 147-51028 CUST. P.O. 28755

QUANTITY 2 SIZE & TYPE 2 1/2 UNB-10

CERTIFIED BY DATE 6/25/85 STAT

SECTIONAL DWG. NO. RW116899

REF. NO.	NO. OF PIECES	NAME OF PARTS	MATERIAL
		STATIONARY PARTS	
1-A	1	CASING UPPER HALF	CAST IRON ASTM-4-278 CL. 25
1-B	1	CASING LOWER HALF	CAST IRON ASTM-4-278 CL. 25
3	4	CASING RING	BRONZE ASTM-B-271
5	1	DIAPHRAGM	17% CHROME STEEL
17	1	THRUST BEARING HOUSING	CAST IRON
19	1	THRUST BEARING COVER (OUTER)	CAST IRON
21	1	LINE BEARING HOUSING	CAST IRON
27	3	ELASTIC SEAL RING	FLUOREL
81	2	ADJUSTING BOLT	STEEL
85	2	CONSTANT LEVEL OILER	WHITE METAL
89	1	NAMEPLATE	ANODIZED ALUMINUM
193	2	BEARING HOUSING COVER	CAST IRON
225	2	BEARING VENTS	STEEL
		ROTATING PARTS	
2	1	SHAFT W/KEYS	CARBON STEEL ASTM-A-576
4	2	1ST & 3RD STAGE IMPELLER	BRONZE
4-A	2	2ND & 4TH STAGE IMPELLER	BRONZE
6	1	THRUST BEARING	STEEL
8	1	LINE BEARING	STEEL
22	2	WATER SHIELD	BRONZE
24	1	BEARING LOCKNUT	STEEL
28	1	BEARING LOCKWASHER	STEEL
30	2	DISTANCE SLEEVE (SHORT)	17% CHROME STEEL
30-A	1	DISTANCE SLEEVE (LONG)	17% CHROME STEEL
76	1	OIL FLINGER	CAST IRON
82	1	OIL RING	STEEL

M.C.I.
CIA BID PKG. #3
SUBMITTAL #
RESUBMITTAL #
REC./APRVL.

Declassified in Part - Sanitized Copy Approved for Release 2012/07/02 : CIA-RDP02-06298R000900050017-2

Declassified in Part - Sanitized Copy Approved for Release 2012/07/02 : CIA-RDP02-06298R000900050017-2

RW-116899

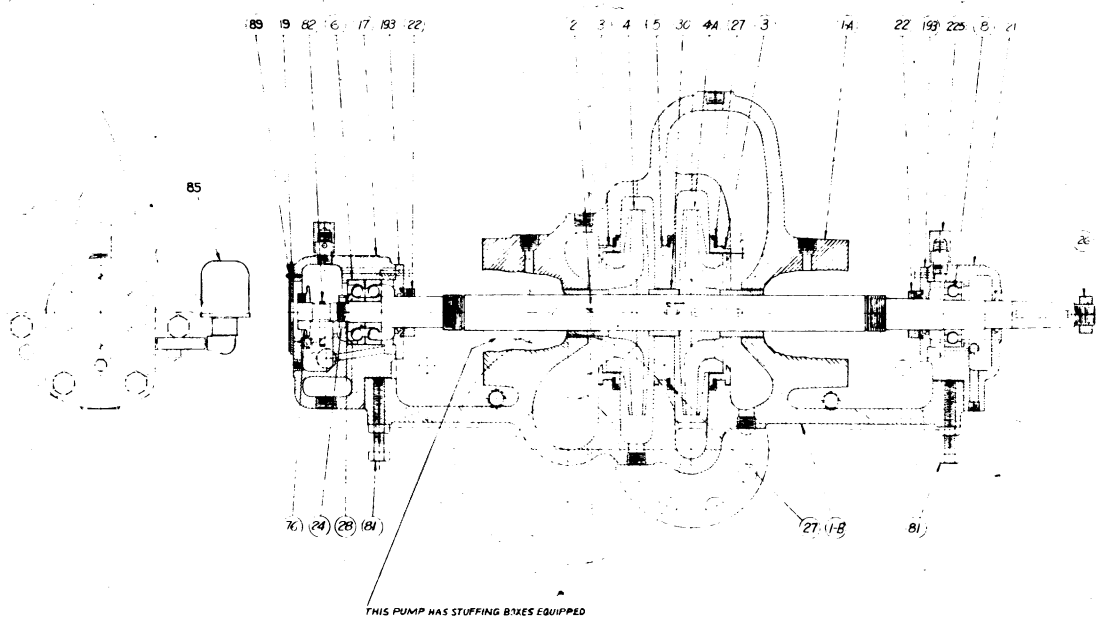

ROTATING PARTS

REF NO	NO. REQ'D	NAME OF PART
2	1	SHAFT W KEYS
4	1	1ST STAGE IMPELLER
4A	1	2ND STAGE IMPELLER
15	1	THRUST BEARING
8	1	...NE BEARING
22	2	WATER SHIELD
24	1	BEARING LOCKNUT
26	1	COUPLING NUT
28	1	BEARING LOCKWASHER
30	1	DISTANCE SLEEVE
76	1	OIL FINGER
82	1	...L RING

STATIONARY PARTS

REF NO	NO. REQ'D	NAME OF PART
1	1	CASING UPPER HALF
11	1	CASING LOWER HALF
3	2	CASING RING
5	1	CENTER DIAPHRAGM
17	1	THRUST BEARING HSG.
21	1	LINE BEARING HOUSING
27	3	ELASTIC SEAL RING
81	2	ADJUSTING BOLT
15	1	CONSTANT LEVEL OILER
19	1	NAME PLATE COVER
193	2	BEARING HOUSING COVER
225	1	BEARING SLEEVE
8	1	THRUST END OUTER COVER

M.C.I.
CIA BID PKG. #3
SUBMITTAL #
RESUBMITTAL #
REC./APRVL.

PLEASE NOTE

FOR SECTION WITHOUT ELASTIC SEAL RING SEE RW-131465
STANDARD SECTION ON RW-103551

ADDED THRUST END OUTER COVER 1-2-87 BC

UNB VOLUTE PUMP
SECTIONAL ELEVATION

WORTHINGTON PUMP AND MACHINERY CORPORATION
Harrison, New Jersey

SCALE 1:8 Sq. | SIZE C | RW-116899

Declassified in Part - Sanitized Copy Approved for Release 2012/07/02 : CIA-RDP02-06298R000900050017-2

Declassified in Part - Sanitized Copy Approved for Release 2012/07/02 : CIA-RDP02-06298R000900050017-2

** D-2125-455 (HACH.)
*** 0358 (C. STL.)
1853 (C. STL. W.E.C.)
0165 (18-8 S.S.)
1852 (18-8 S.S. W.E.C.)
3809 (316 S.S.)

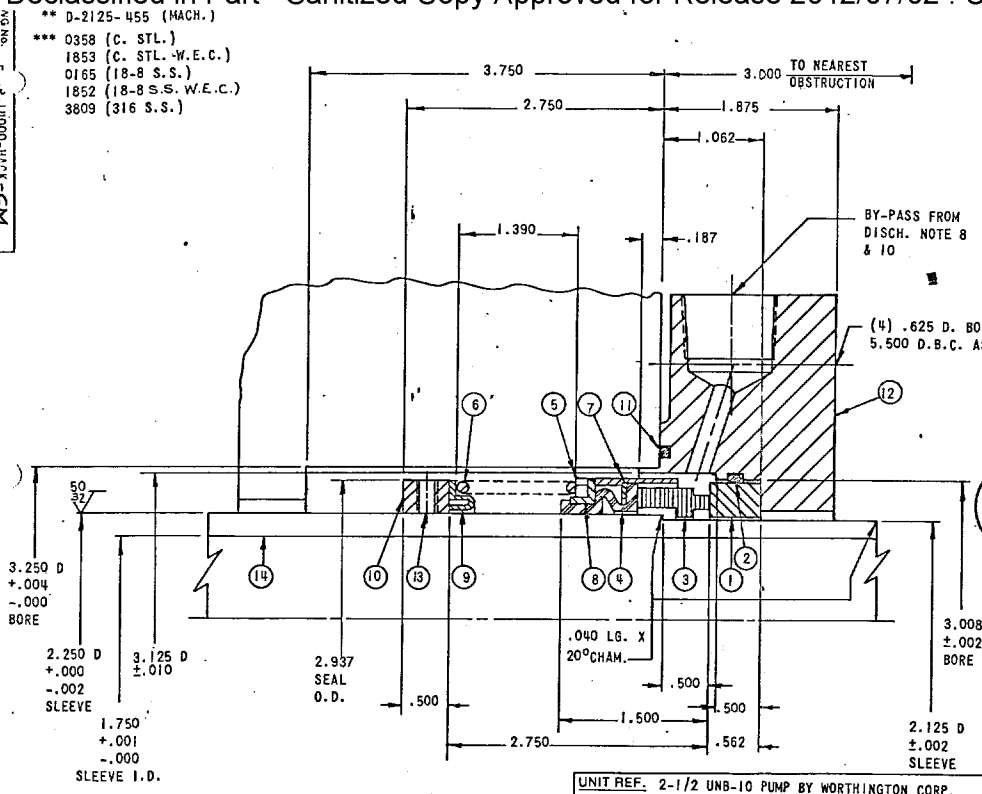

ITEM	*	DWG. NUMBER			MAT'L.	PART NAME	*	QUANTITY	MATERIAL	RECOMMENDED SPARE PARTS
1		D	2125	455	9200	MATING RING		1	TUNG. CARBIDE	X
2		.	0000	234	9560	"O" RING		1	CRANLAST	X
3	*	D	2250	347	9010	PRIMARY RING		1	CARBON	X
4	*	D	2250	191	3800	BELLOWS		1	CRASLAST	X
5	*	D	2250	303	0500	RETAINER		1	18-8 S.S.	
6	*		***			SPRING		1	18-8 S.S.	
7	*	D	2250	144	0500	DISC		1	18-8 S.S.	
8	*	D	2250	031	0500	DRIVE BAND		1	18-8 S.S.	
9	*	D	2250	068	0500	SPRING HOLDER		1	18-8 S.S.	
10		D	2250	093	0500	COLLAR		1	18-8 S.S.	
11			0000	237	9560	"O" RING		1	CRANLAST	X
12		HACK	2125	.008	0200	GLAND PLATE		1	STEEL	
13		5/16-24 X 3/8 LG. 1131-2406-000			0550	SET SCREW		2	316 S.S.	X
14		BY	CUST.			SLEEVE				

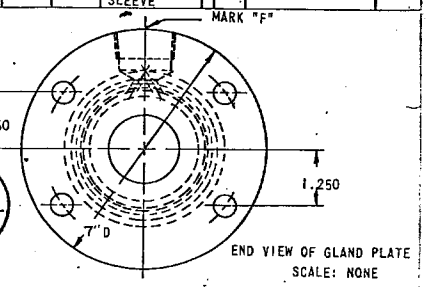

END VIEW OF GLAND PLATE
SCALE: NONE

M.C.I.
CIA BID PKG. #3
SUBMITTAL #
RESUBMITTAL #
REC./APRVL.

OPERATING CONDITIONS:

LIQUID WATER

SP. GR.	SPEED	TEMP.	PRESS.
1.0	3600 RPM	250°	

CODE: O_{28} | F_{10} | 1 | D | 1

SEAL ASS'Y No. D-2250-619
MATING RING ASS'Y No.

*PART OF ASSEMBLY
+ SPECIAL PART

UNIT REF. 2-1/2 UNB-10 PUMP BY WORTHINGTON CORP.
801885-74

B/P REF. DWG. #RY-155479 DT'D 3-12-67 BY WORTHINGTON CORP.
P.O. # TS 081107 AB

7 CIRCULATE SUITABLE LIQUID (INLET AT BOTTOM, OUTLET AT TOP) AT
6 SEAL SUPPLIED WITH CRANELAST "KEEP OIL FROM CONTACTING ELASTOMERIC PARTS. FOR INSTALLATION USE PROPYLENE GLYCOL, GLYCERINE, OR DISTILLED WATER
☒ GLAND MUST BE IN CONTACT WITH HOUSING DO NOT OVERSTRESS
☒ 4 MAINTAIN PRESSURE IN SEAL CAVITY ABOVE VAPOR POINT DURING OPERATION
☒ 3 BEFORE INSTALLING SEAL LUBRICATE ITEM # 2 & 4
☒ 2 VENT GAS ENTRAPMENT BEFORE STARTUP
☒ 1 CLEAN SEAL FACES BEFORE FINAL ASSEMBLY

☐ 12 SPACER (ITEM #) IS ONLY FOR THE PURPOSE OF PROPERLY LOCATING SEAL AFTER GLAND PLATE, BEARINGS, SHAFT, AND SEAL ARE LOCKED IN PLACE SPACER MUST BE REMOVED BEFORE STARTING UNIT
☐ 11 TO AVOID MOVEMENT OF SLEEVE IN RELATION TO SHAFT SPOT FACE SHAFT UNDER TWO SET SCREWS MIN ON THE OUTER ROW 180° APART
☒ 10 USE A "JOHN CRANE" SEAL SITTER (PRESSURE SENSITIVE SWITCH) TO PROTECT SEAL FROM POSSIBLE DRY RUN
☐ 9 USE A "JOHN CRANE" PRESSURE LUBRICATOR TO MAINTAIN CIRCULATION OF PRESSURIZED LUBRICANT TO THE SEAL CHAMBER
☒ 8 USE A "JOHN CRANE" ABRASIVE SEPARATOR IF PUMPAGE CONTAINS SOLIDS IN SUSPENSION
☒ IF REQUIRED

IMPORTANT NOTES:

REV		
C	REV. & REDRAWN 79-00656	

PRINT IS PROPERTY OF CRANE PACKING CO. SUBJECT TO RETURN UPON DEMAND. TITLE TO SAME NEVER SOLD OR TRANSFERRED FOR ANY REASON ALL RIGHTS TO INVENTION RESERVED

John Crane®
CRANE PACKING COMPANY
6400 W. OAKTON ST.
MORTON GROVE, ILL.

STD. APP.	
DR. APP.	
DR.	M.P.
CH.	Y. Yoman
APPR.	
DATE	3-27-79

TYPE - 1B
2.250 D. SHAFT SEAL
WORTHINGTON CORP.
TANEYTOWN, MD.

DWG. No. F-SP-11000-HACK-CM

Declassified in Part - Sanitized Copy Approved for Release 2012/07/02 : CIA-RDP02-06298R000900050017-2

Declassified in Part - Sanitized Copy Approved for Release 2012/07/02 : CIA-RDP02-06298R000900050017-2

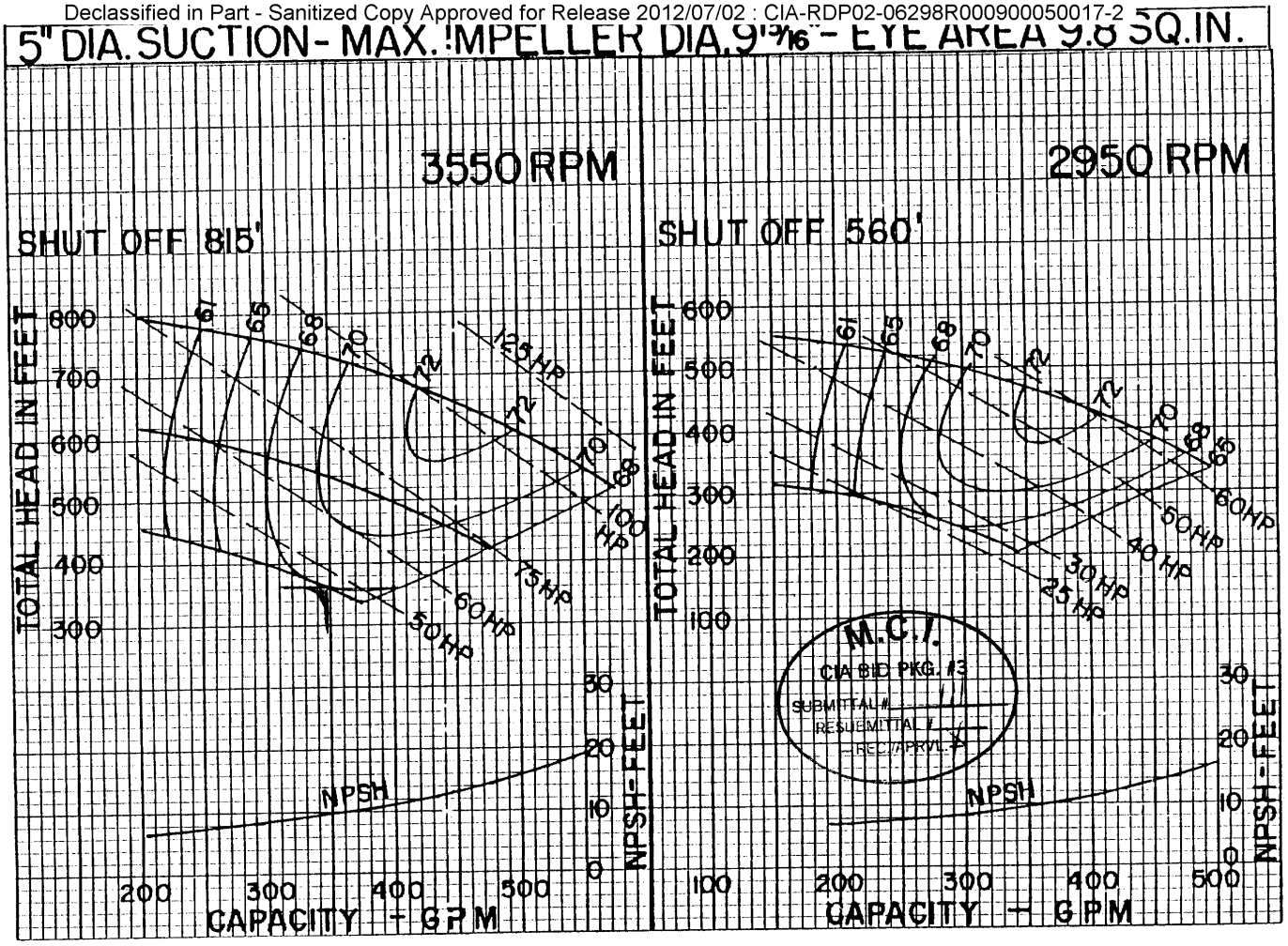

2½ UNB-10

ER- 2494

DESIGN CONDITIONS	This pump is guaranteed for one set of designed conditions. Other points shown on this curve are approximate and not guaranteed. The design capacity, head and efficiency are based on shop tests when handling clear, cold water.	CUSTOMER: Mechanical Constructors, Inc		Worthington Group, McGraw-Edison Company
Capacity 350 GPM		SERVICE: Boiler Feed	ITEM:	Date 6-25-85
Total Head 367 Ft.				
Eff. 67% Sp. Gr. 0.943				
BHP 46 Design ____ Max. ____		2½ UNB-10		ER- 2494
NPSH Avail. ____				

Declassified in Part - Sanitized Copy Approved for Release 2012/07/02 : CIA-RDP02-06298R000900050017-2

Declassified in Part - Sanitized Copy Approved for Release 2012/07/02 : CIA-RDP02-06298R000900050017-2

2036-8 Page 2
October 1980
Supersedes
February 1976 Issue
1½ LLR-7
60 Cycle

Customer MECHANICAL CONSTR. Worthington S.O. 147-51029
Project _____ Proposal/Order No. 60-750632
Cust. Proposal/Order No. 28755 Certified By [signature]
Customer Item No. 1-BOILER FEED P-2 DEAERATOR #1 & 2 Date 8/26/85
Liquid/Service WATER Sp. Gr. .943 Visc. _____ SSU
Capacity 110 Head 367 Temp. 250 °F/X Consistency 57 %

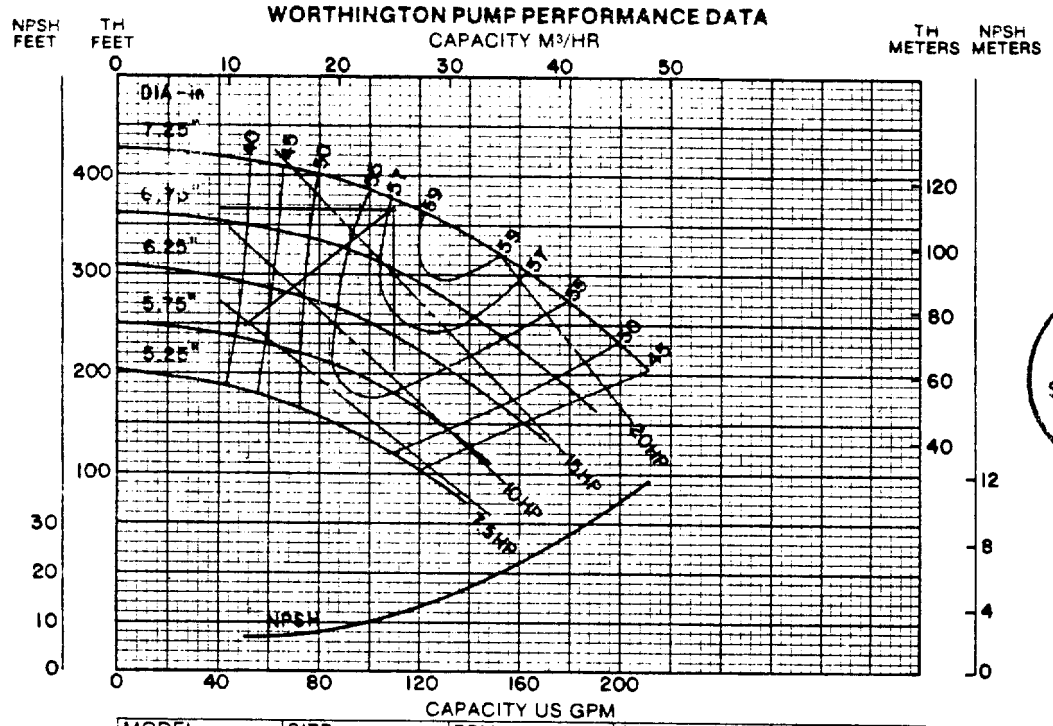

MODEL	SIZE	RPM	CURVE NO.	MAX. SOLIDS
1·1/2 LLR-7	IMP C	3530	A-19078	.12 DIA

M.C.I.
CIA BID PKG. #3
SUBMITTAL # 11
RESUBMITTAL # _____
— REC./APRVL. X

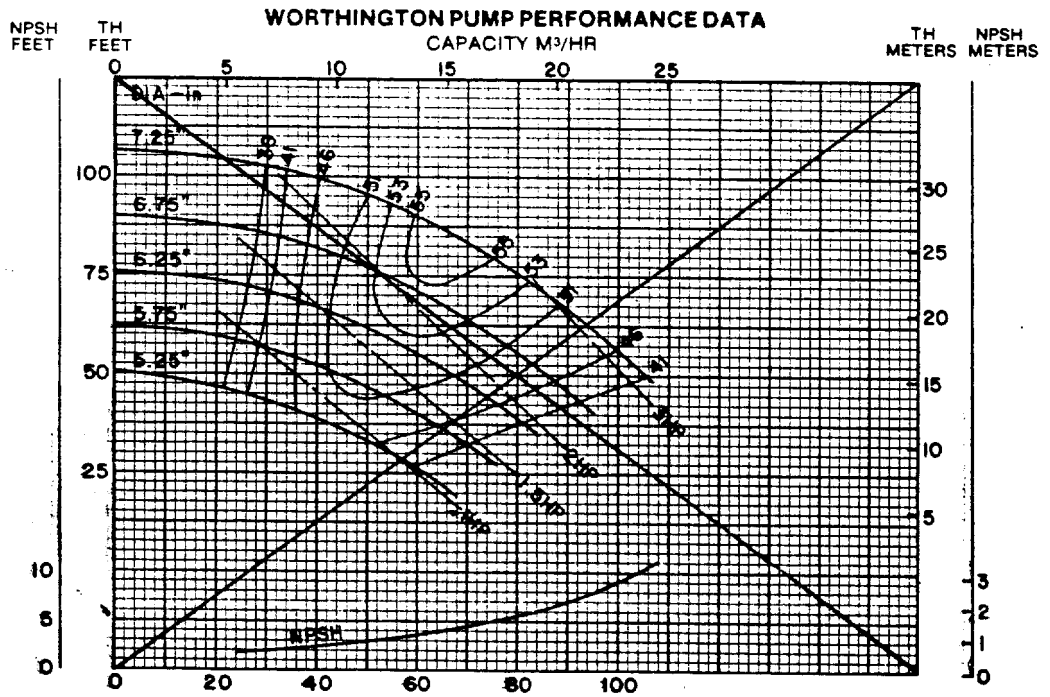

MODEL	SIZE	RPM	CURVE NO.	MAX. SOLIDS
1·1/2 LLR-7	IMP C	1730	A-19079	.12 DIA

Litho'd. in U.S.A. **WORTHINGTON PUMP**

Declassified in Part - Sanitized Copy Approved for Release 2012/07/02 : CIA-RDP02-06298R000900050017-2

Declassified in Part - Sanitized Copy Approved for Release 2012/07/02 : CIA-RDP02-06298R000900050017-2

Customer MECHANICAL CONSTRUCTORS Worthington S.O. 144-51024
Project _____ Proposal/Order No. 60-750633
Cust. Proposal/Order No. 28755 Certified By Samuel R. Bailey
Customer Item No. 2. BOILER FEED P-3 Date 8/26/85
DEAERATOR #1 & 2
Liquid/Service WATER Sp. Gr. .943 Visc. _____ SSU
Capacity 220 Head 367 Temp. 250 °F/% Consistency 60 %

2036-8 Page 9
October 1980
Supersedes
March 1971 Issue
2½ LR-10
60 Cycle

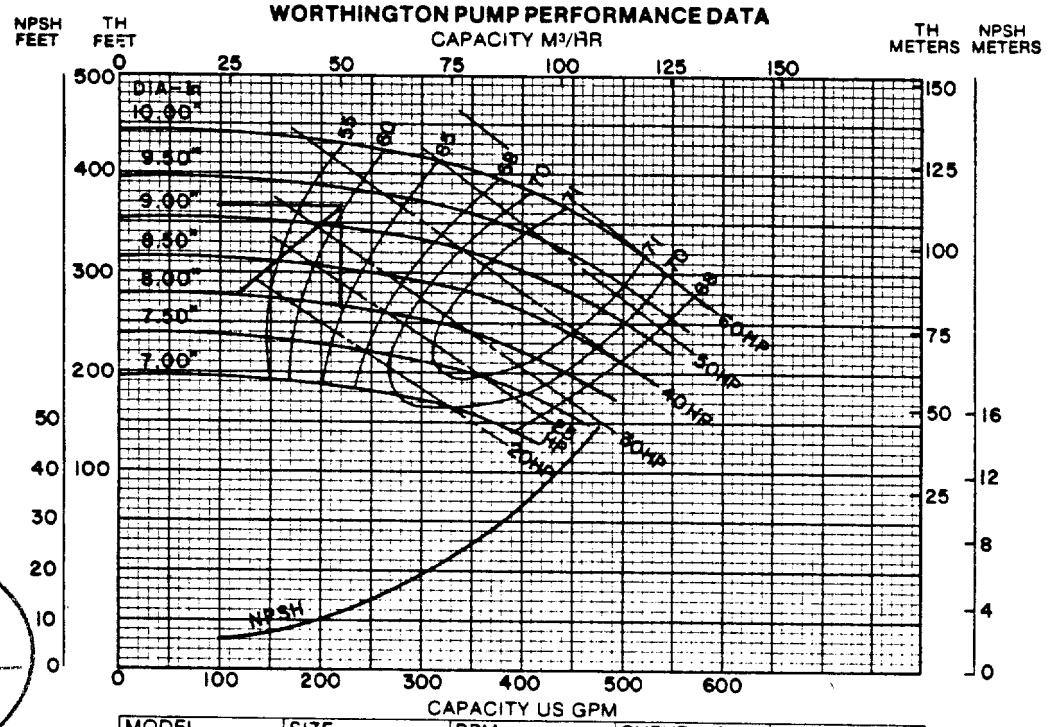

MODEL	SIZE	RPM	CURVE NO.	MAX. SOLIDS
2-1/2 LR-10	IMP C	3550	A-19086	.25 DIA

M.C.I.
CIA BID PKG. #3
SUBMITTAL #
RESUBMITTAL #
REC./APRVL.

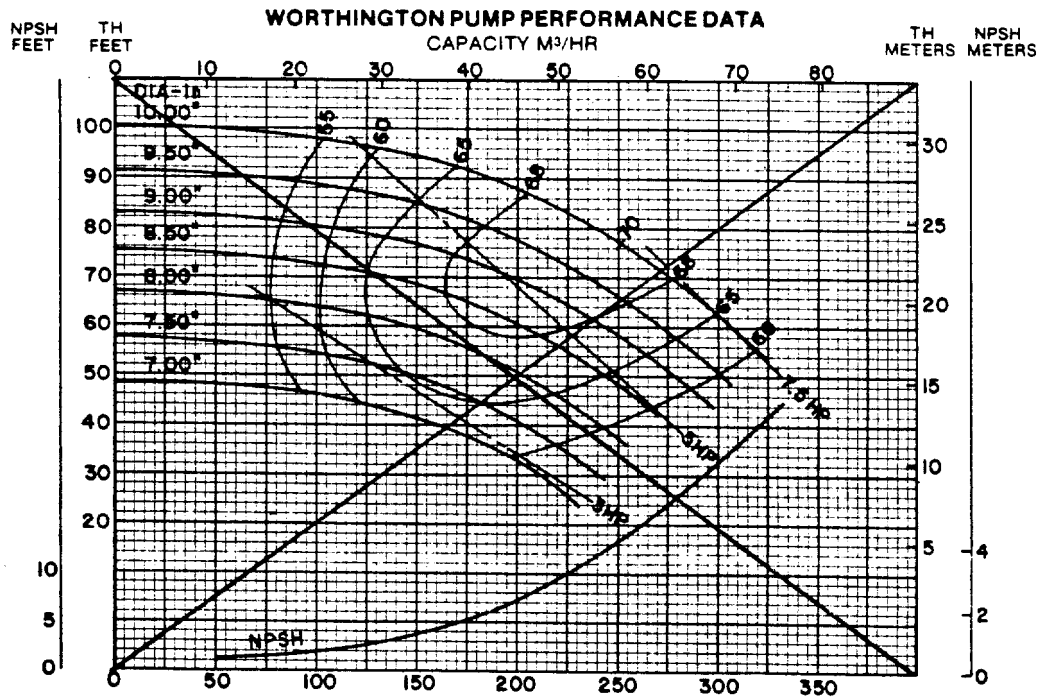

MODEL	SIZE	RPM	CURVE NO.	MAX. SOLIDS
2-1/2 LR-10	IMP C	1750	A-19087	.25 DIA

Declassified in Part - Sanitized Copy Approved for Release 2012/07/02 : CIA-RDP02-06298R000900050017-2

Declassified in Part - Sanitized Copy Approved for Release 2012/07/02 : CIA-RDP02-06298R000900050017-2

Customer MECHANICAL CONSTRUCTORS Worthington S.O. LTT 31029
Project _____ Proposal/Order No. 60-750635
Cust. Proposal/Order No. 28755 Certified By Samuel Brilley
Customer Item No. 4. CONDENSATE P-3 Date 8/26/85

Liquid/Service WATER Sp. Gr. .943 Visc. _____ SSU
Capacity 360 Head 60 Temp. 250 °F/°C Consistency 78 %

2036-8 Page 13
October 1980
Supersedes
February 1976 Issue
3 LR-9
60 Cycle

M.C.I.
CIA BID PKG. #3
SUBMITTAL # 111
RESUBMITTAL #
RECEIVED

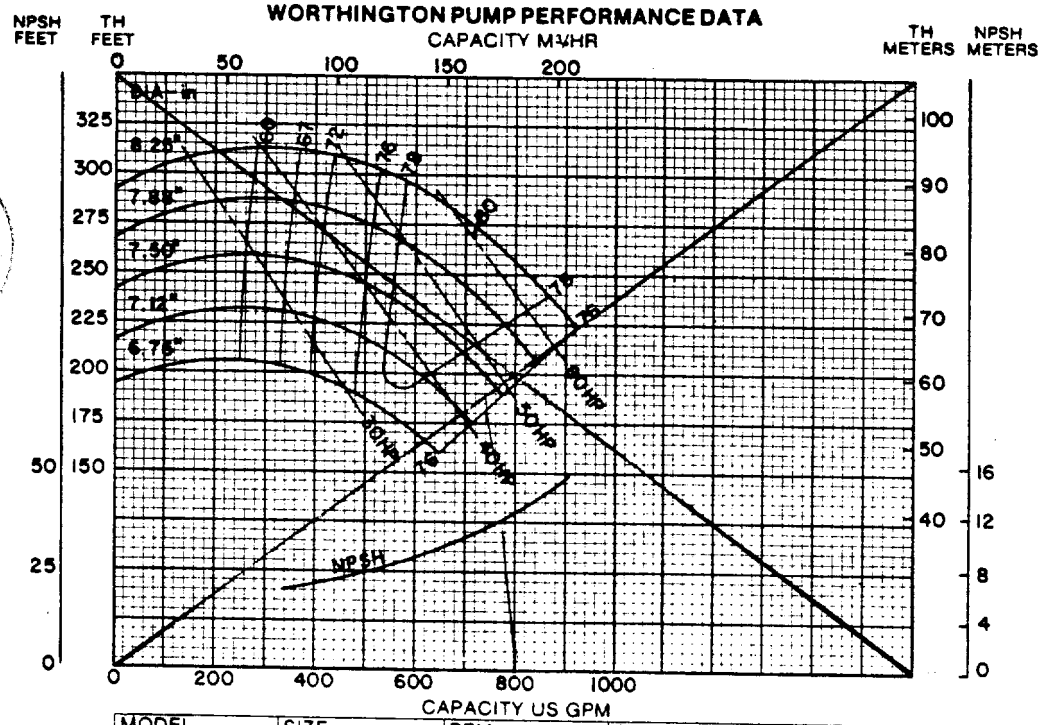

MODEL	SIZE	RPM	CURVE NO.	MAX. SOLIDS
3LR-9	IMP C	3550	A-19092	.38 DIA

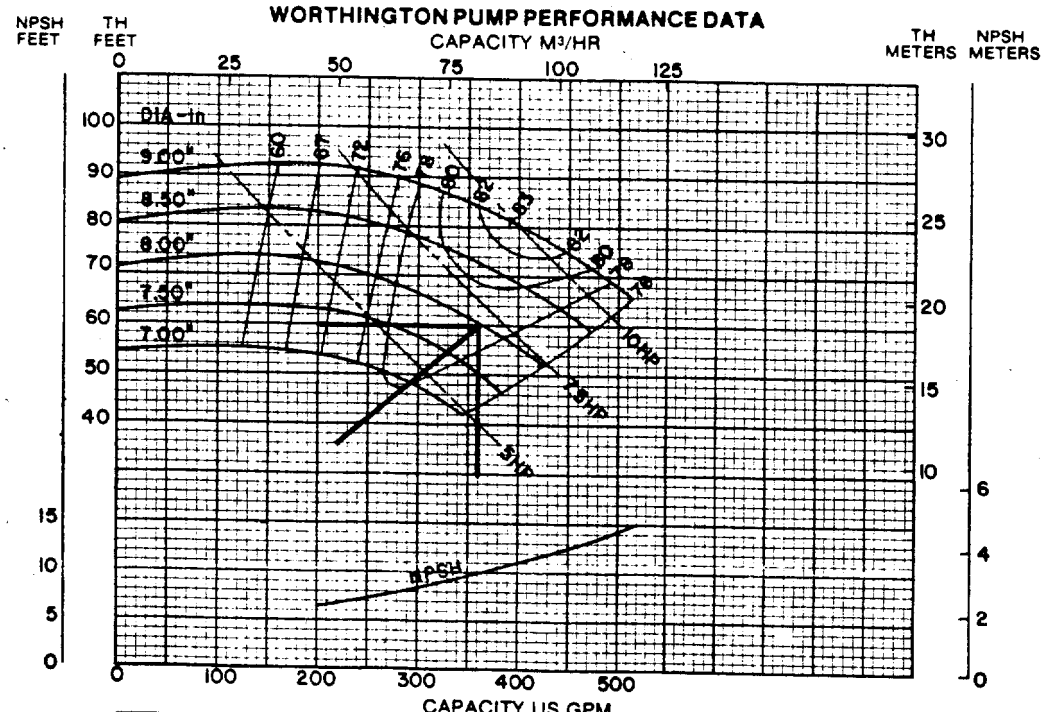

MODEL	SIZE	RPM	CURVE NO.	MAX. SOLIDS
3LR-9	IMP C	1760	A-19093	.38 DIA

Declassified in Part - Sanitized Copy Approved for Release 2012/07/02 : CIA-RDP02-06298R000900050017-2

RY-183822

Declassified in Part - Sanitized Copy Approved for Release 2012/07/02 : CIA-RDP02-06298R000900050017-2

CLOCKWISE ROTATION
DETERMINED FROM OUTBOARD END OF PUMP

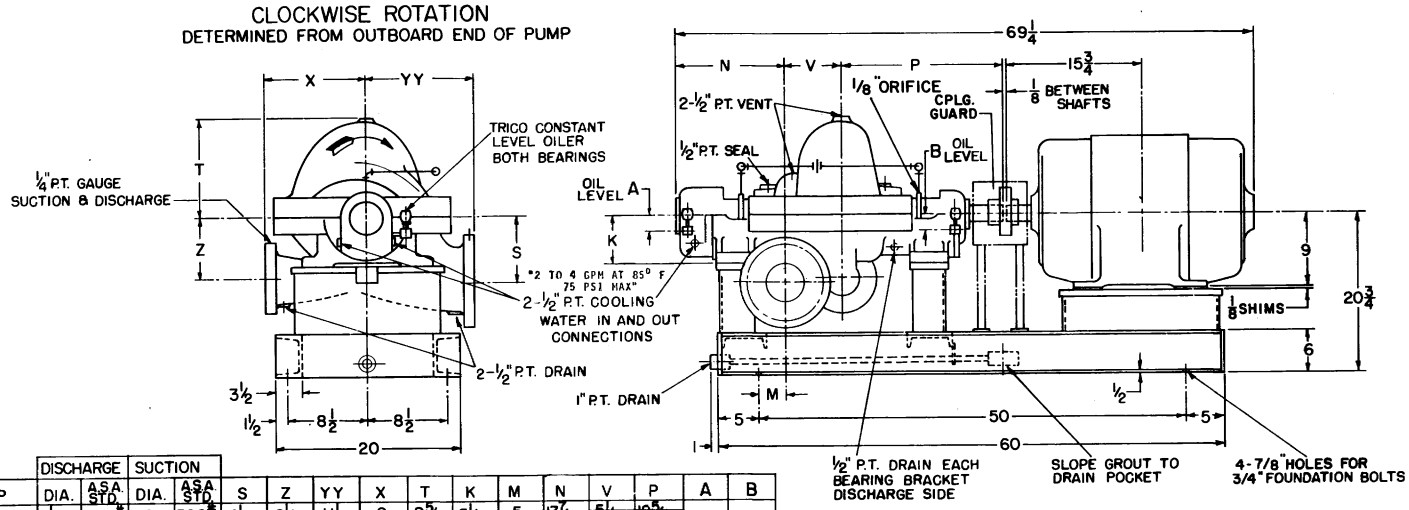

PUMP	DISCHARGE DIA.	DISCHARGE A.S.A. STD.	SUCTION DIA.	SUCTION A.S.A. STD.	S	Z	YY	X	T	K	M	N	V	P	A	B
~~1 1/2-UNB-11~~	~~1 1/2~~	~~600#~~	~~3~~	~~300#~~	~~4 1/2~~	~~6 1/2~~	~~11 1/2~~	~~9~~	~~9 5/8~~	~~8 1/2~~	~~5~~	~~13 7/8~~	~~5 1/2~~	~~19 5/8~~		
~~2-UNB-9~~	~~2~~	~~600#~~	~~4~~	~~250#~~	~~6~~	~~6~~	~~11 1/2~~	~~10 1/2~~	~~9 1/4~~	~~8 1/2~~	~~8~~	~~13 7/8~~	~~5 1/2~~	~~19 5/8~~		
2 1/2-UNB-10	2 1/2	600#	5	250#	6 1/2	6 1/2	12 1/2	11 1/2	10 5/8	5 1/2	4 5/8	13 3/4	6	19 1/2	1 1/4	1 7/32
~~3-UNB-11~~	~~3~~	~~600#~~	~~6~~	~~250#~~	~~7 1/2~~	~~7 1/2~~	~~13~~	~~12~~	~~12 1/8~~	~~8 1/2~~	~~4 5/8~~	~~13 1/2~~	~~6 1/2~~	~~19 3/4~~		
~~4-UNB-12~~	~~4~~	~~400#~~	~~6~~	~~250#~~	~~8 1/2~~	~~8~~	~~14~~	~~13 1/2~~	~~12 5/8~~	~~8 1/2~~	~~4 3/4~~	~~14 3/4~~	~~7 3/8~~	~~21 1/2~~		
~~5-UNB-13~~	~~5~~	~~400#~~	~~8~~	~~250#~~	~~9~~	~~9~~	~~16~~	~~15 1/2~~	~~14~~	~~8 1/2~~	~~6~~	~~16 7/32~~	~~7 1/8~~	~~22 1/32~~		
~~6-UNB-17~~	~~6~~	~~250#~~	~~10~~	~~250#~~	~~10 1/2~~	~~11 1/2~~	~~20~~	~~18~~	~~19~~	~~8 1/2~~	~~6 3/4~~	~~18 9/16~~	~~9 1/2~~	~~23 7/16~~		

DRIVER DATA			
MFG. SIEMENS-ALLIS	H.P. 50	R.P.M. 3600	PH/CY/V 3/60/480
ENCL. T.E.F.C.	FR 365 US	FURNISHED BY WORTHINGTON	
CPLG. SIER BATH C-1 1/2			
SEAL. JOHN CRANE TYPE 1-B			

M.C.I.
CIA BID PKG. #3
SUBMITTAL # 111
RESUBMITTAL #
REC./APRVL.

USER MUST PROVIDE FOR REASONABLE ADJUSTMENT OF PIPING, FOUNDATION BOLTS, AND CONDUIT TO MATCH CONNECTIONS

ALL DIMENSIONS ARE IN INCHES

15 34 40

CORRECT FOR CUSTOMER'S ORDER 55755
CUSTOMER MECHANICAL CONSTRUCTORS, INC.
DISTRICT OFFICE ORDER 14-3102 WORKS ORDER TS81107
CERTIFIED BY [illegible] DATE 6-22-85

Dimensions are from drawings, castings may vary slightly. Foundation bolts must not be fixed rigidly until machine is in place. This print is loaned subject to return on demand and under condition that it is not to be used in any way detrimental to our interests. Do not scale; additional dimensions will be furnished upon request.

ALT. DATES

2 1/2 UNB-10 VOLUTE PUMP ELEVATION

WORTHINGTON PUMP DIVISION, DRESSER INDUSTRIES, INC.
TANEYTOWN, MD.

ORDER TS81107 DATE 6-19-85 SCALE NTS

DRAWN	CHECKED	APPROVED	
RSN	[illegible]	[illegible] 7/18	RY-183822 A

Declassified in Part - Sanitized Copy Approved for Release 2012/07/02 : CIA-RDP02-06298R000900050017-2

Declassified in Part - Sanitized Copy Approved for Release 2012/07/02 : CIA-RDP02-06298R000900050017-2

YX-101729

DRIVER: TURBODYNE
SST 300 STEAM TURBINE
FR 302T
8.3 HP @ 1755 RPM

PUMP ROTATION
CLOCKWISE WHEN VIEWED
FROM COUPLING END

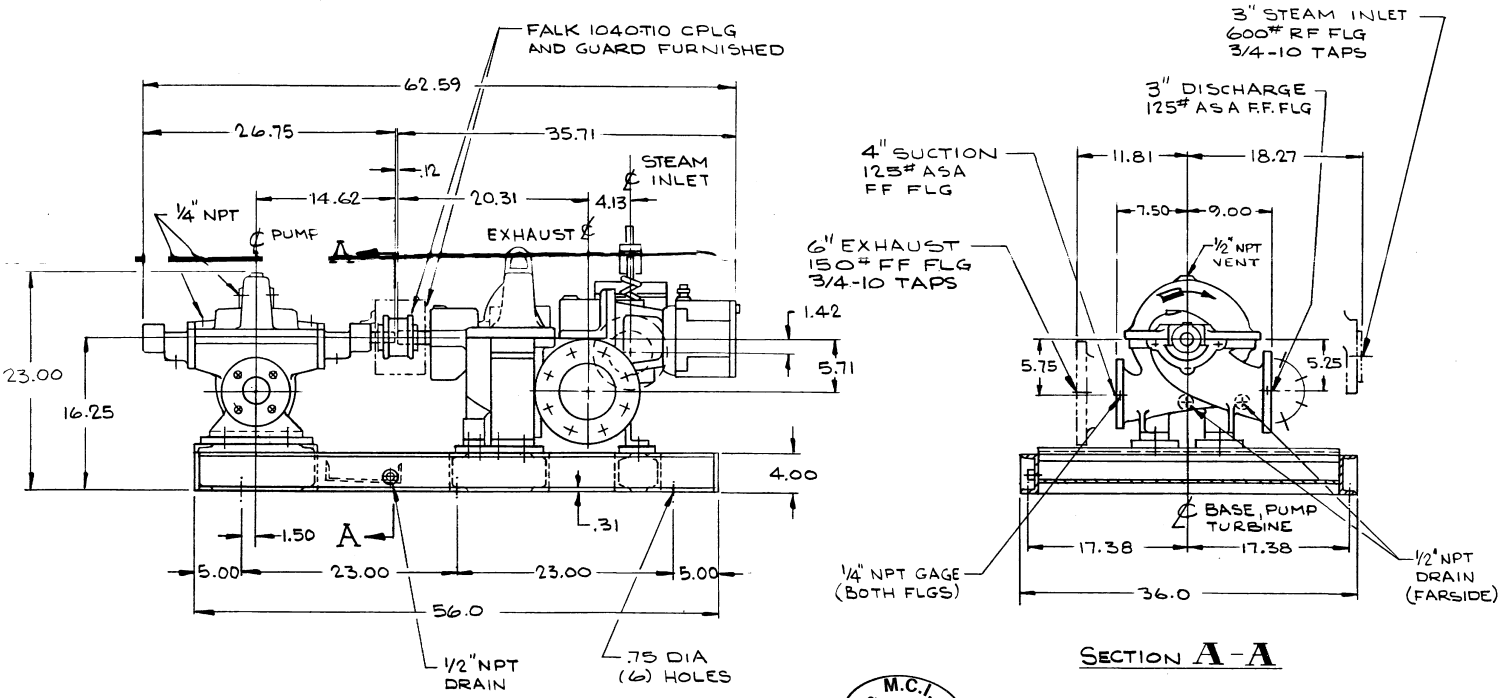

SECTION A-A

M.C.I.
CIA BID PKG. #3
SUBMITTAL #
RESUBMITTAL #
REC./APRVL.

TAG: "CONDENSATE P-3"

CORRECT FOR CUSTOMER'S ORDER NO. 28755
CUSTOMER MECHANICAL CONSTRUCTORS, INC.
DISTRICT OFFICE ORDER 6147-51029 WORKS ORDER 60-750635
CERTIFIED BY Samuel P. Bradley DATE 8-26-85

Dimensions are from drawings, castings may vary slightly. Foundation bolts must not be fixed rigidly until machine is in place. This print is loaned subject to return on demand and under condition that it is not to be used in any way detrimental to our interests. Do not scale; additional dimensions will be furnished upon request.

ALT. DATES

3LR-9 VOLUTE PUMP
ELEVATION

WORTHINGTON PUMP DIVISION, DRESSER INDUSTRIES, INC.
EAST ORANGE, N.J. 07017

ORDER 60-750635 DATE 8-13-85 SCALE 1 1/2" = 1 FT

DRAWN	CHECKED	APPROVED	
EaP	RW	CW	YX-101729

Declassified in Part - Sanitized Copy Approved for Release 2012/07/02 : CIA-RDP02-06298R000900050017-2

Declassified in Part - Sanitized Copy Approved for Release 2012/07/02 : CIA-RDP02-06298R000900050017-2

RX-101728

DRIVER: TURBODYNE
SST 300 STEAM TURBINE
FR 302T
55 HP @ 3550 RPM

PUMP ROTATION:
COUNTER CLOCKWISE WHEN
VIEWED FROM COUPLING END

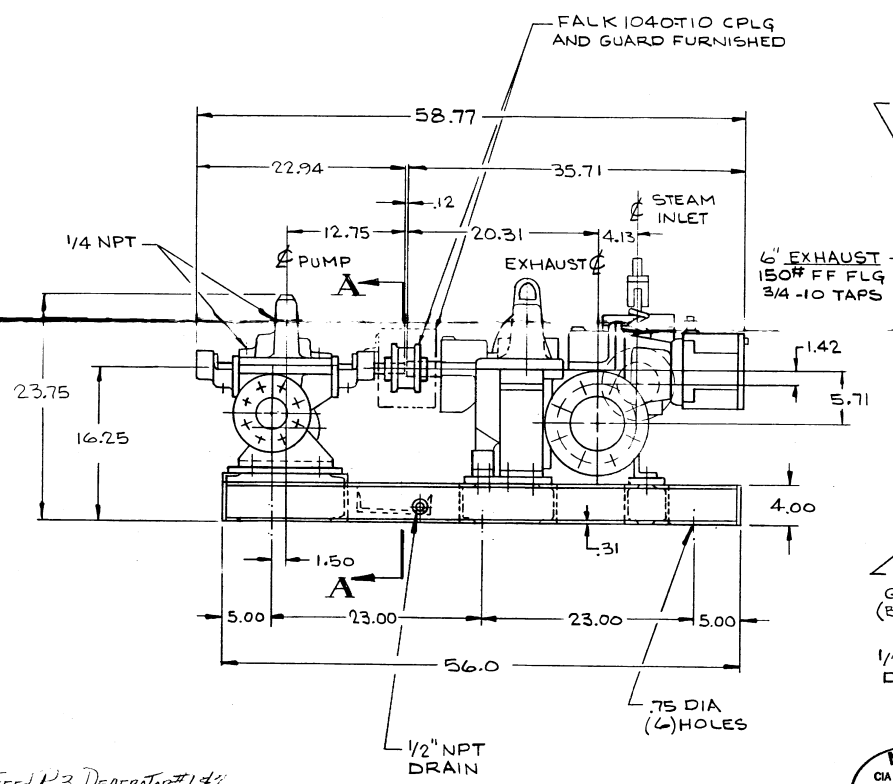

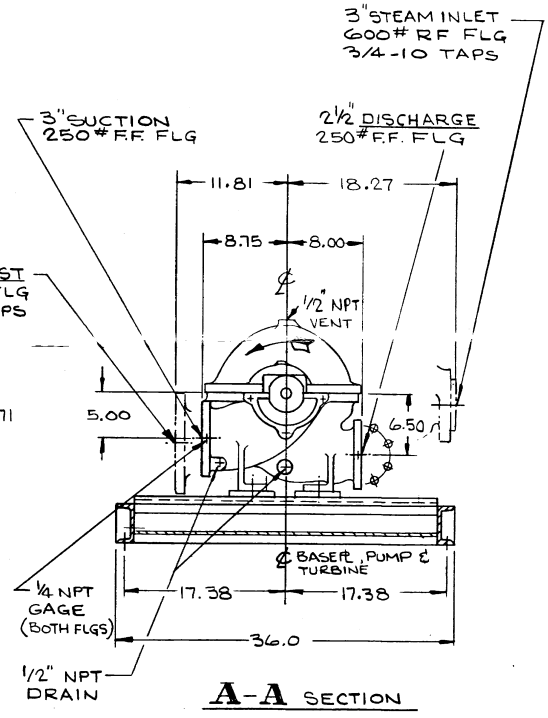

A-A SECTION

M.C.I.
CIA BID PKG. #3
SUBMITTAL #
RESUBMITTAL #
REC./APRV.

TAG: "BOILER FEED P-3, DEAERATOR #1 & 2"

CORRECT FOR CUSTOMER'S ORDER No. 28755
CUSTOMER MECHANICAL CONSTRUCTORS, INC.
DISTRICT OFFICE ORDER 147-51029 WORKS ORDER 60-750633
CERTIFIED BY Samuel S. Bailey DATE 8-26-85

Dimensions are from drawings, castings may vary slightly. Foundation bolts must not be fixed rigidly until machine is in place. This print is loaned subject to return on demand and under condition that it is not to be used in any way detrimental to our interests. Do not scale; additional dimensions will be furnished upon request.

ALT. DATES

2 1/2 LR-10 VOLUTE PUMP
ELEVATION

WORTHINGTON PUMP DIVISION, DRESSER INDUSTRIES, INC.
EAST ORANGE, N.J. 07017

ORDER 60-750633 DATE 8-12-85 SCALE 1 1/2" = 1 FT

DRAWN	CHECKED	APPROVED	
EaP	Gw	CW	YX-101728

Declassified in Part - Sanitized Copy Approved for Release 2012/07/02 : CIA-RDP02-06298R000900050017-2

Declassified in Part - Sanitized Copy Approved for Release 2012/07/02 : CIA-RDP02-06298R000900050017-2

CD-190107 REF. CD-190106

LIST OF GAUGES

GAUGE	DIAL SIZE	DESCRIPTION	CONN.	SIZE & TYPE	CONNECT TO
a	4-1/2	INITIAL STEAM PRESSURE	A-Y	1/2 PIPE THD	A-X AT TURBINE
b	4-1/2	EXHAUST STEAM PRESSURE	B-Y	1/2 PIPE THD	B-X AT TURBINE
c		TACHOMETER INDICATOR			
d		NAMEPLATE			

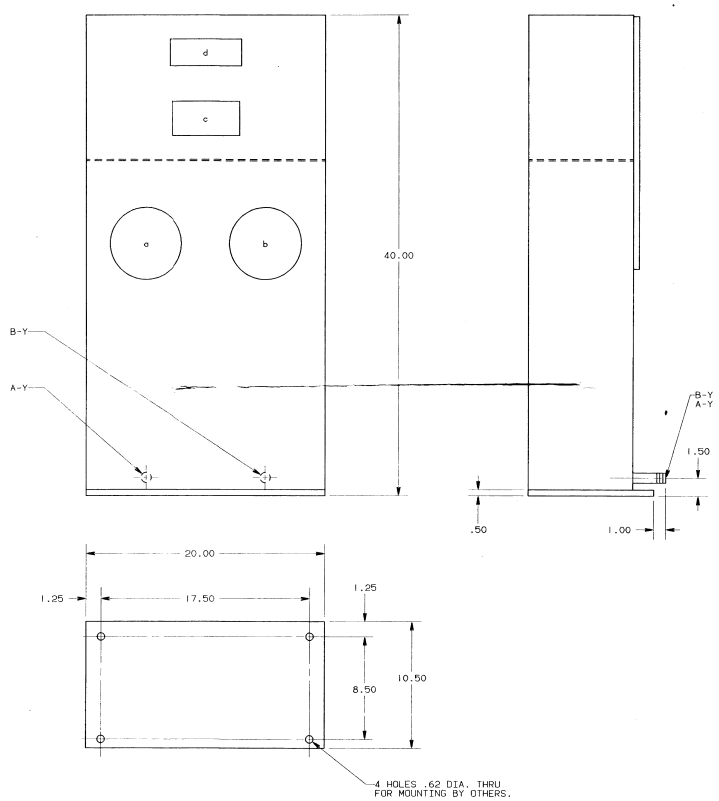

THIS PRINT IS CERTIFIED CORRECT FOR

WORTHINGTON PUMP DIV.

CUSTOMER'S ORDER NO.: Y-750632-635-C
BRANCH OFFICE NO.: 10-51065
WORK ORDER NO.: U-23524
APPROVED BY: [signature] DATE: 7/29/85
A. PLANK

THE CONSTRUCTION SHOWN IS STANDARD FOR THIS MACHINE. ANY DEVIATION FROM STANDARD MAY INVOLVE ADDITIONAL COST, A CORRESPONDING INCREASE IN SELLING PRICE AND DELAY IN SHIPMENT. IF CHANGES ARE NECESSARY INDICATE THEM CAREFULLY AND IN DETAIL ON THIS PRINT AND RETURN TO TURBODYNE. YOU WILL BE ADVISED PROMPTLY AS TO THE ADDITIONAL PRICE. MEANWHILE THOSE DETAILS INVOLVED WILL BE HELD UP UNTIL YOUR AUTHORIZATION TO PROCEED IS RECEIVED.

STEAM TURBINE DIVISION

THIS PRINT IS CERTIFIED CORRECT FOR

WORTHINGTON PUMP DIV.

CUSTOMER'S ORDER NO.: Y-750632-635-A
BRANCH OFFICE NO.: 10-51066
WORK ORDER NO.: U-23525
APPROVED BY: [signature] DATE: 7/29/85
A. PLANK

THE CONSTRUCTION SHOWN IS STANDARD FOR THIS MACHINE. ANY DEVIATION FROM STANDARD MAY INVOLVE ADDITIONAL COST, A CORRESPONDING INCREASE IN SELLING PRICE AND DELAY IN SHIPMENT. IF CHANGES ARE NECESSARY INDICATE THEM CAREFULLY AND IN DETAIL ON THIS PRINT AND RETURN TO TURBODYNE. YOU WILL BE ADVISED PROMPTLY AS TO THE ADDITIONAL PRICE. MEANWHILE THOSE DETAILS INVOLVED WILL BE HELD UP UNTIL YOUR AUTHORIZATION TO PROCEED IS RECEIVED.

STEAM TURBINE DIVISION

M.C.I. CIA BID PKG. #3 SUBMITTAL # 111 DISSEMINATION TECHNICAL

MANUFACTURING LOCATION	ORIGINAL DATE

OUTLINE-GAUGEBOARD

Turbodyne TURBODYNE DIVISION DRESSER INDUSTRIES INC. WELLSVILLE, N.Y. 14895

DRAWN BY: PDC	DATE: 7/22/85
CHECKED: B. HYDE	SCALE: 1 = 4
SUPER: R.A.	FRAME: 20 X 40
APP BY: C.B.	SO.: U-23524

CD-190107

CAT. NO.	CAD IDENT. NO.
	GBOEAB/D190107//,1/11

NOTICE:
THIS DRAWING AND ALL INFORMATION THEREON IS THE PROPERTY OF TURBODYNE AND IS CONFIDENTIAL AND MUST NOT BE MADE PUBLIC OR COPIED. IT IS SUBJECT TO RETURN ON DEMAND

Declassified in Part - Sanitized Copy Approved for Release 2012/07/02 : CIA-RDP02-06298R000900050017-2

Declassified in Part - Sanitized Copy Approved for Release 2012/07/02 : CIA-RDP02-06296R000900050017-2

LE-178371

REF. LD-170665

"SST-300" STEAM TURBINE

WITH

"WOODWARD" TG GOVERNOR

FRAME 302T

NOTES

1. STEAM INLET AND EXHAUST PIPING MUST BE PROPERLY SUPPORTED SO AS NOT TO EXCEED ALLOWABLE FORCES AND MOMENTS GIVEN.
2. HOLD-DOWN BOLTS SHOULD NOT BE RIGIDLY LOCATED UNTIL UNIT IS IN PLACE ON FOUNDATION AS BOLT HOLES MAY VARY .24/6.0mm.
3. 2 HOLES .57 / 14.00mm DIA. LOCATE BOLTING FROM TURBINE SUPPORT SEE NOTE#2.
4. 4 HOLES .72/18mmDIA. LOCATE BOLTING FROM TURBINE SUPPORT. SEE NOTE #2.
5. DRILL AND REAM FOR 2 #8 P&W TAPER DOWELS AFTER FINAL ALIGNMENT IN FIELD.
6. THIS DIMENSION INCREASES BY 8.00/203.2mm WHEN REMOVING TURBINE CASE COVER.
7. PROVISION FOR LIFTING TURBINE CASE COVER ONLY.
8. 1 KEYWAY .376 +.001 -.000 WIDE / 9.6mm +.03 -.00 DEEP
   .209 +.010 -.000 DEEP / 5.3mm +.25 -.00 DEEP.
9. 4 HOLES .63/11mm DIA. LOCATE BOLTING FROM TURBINE GUIDE BLOCK.
10. INSTALL A RELIEF VALVE BETWEEN TURBINE CASING AND FIRST SHUT OFF. SEE CERTIFIED DATA SHEET FOR REQUIRED FLOW CAPACITY AND RELIEF PRESSURE SETTING.
11. CIRCULATION OF COOLING WATER THROUGH BEARING CASE WATER JACKETS IS A NORMAL REQUIREMENT. SEE INSTRUCTION MANUAL FOR POSSIBLE EXCEPTIONS. MAXIMUM WATER PRESSURE 75 psig.
12. TRICO OILERS.
13. OIL LEVEL TO BE MAINTAINED IN BEARING CASES.
14. WHEN COOLING WATER HARNESS IS SPECIFIED CONNECTIONS B-V & C-V WILL BE FIRED BY TURBODYNE.
15. INLET CONNECTION CONFORMS TO ANSI B16.5 FOR FACING AND DRILLING REQUIREMENTS.

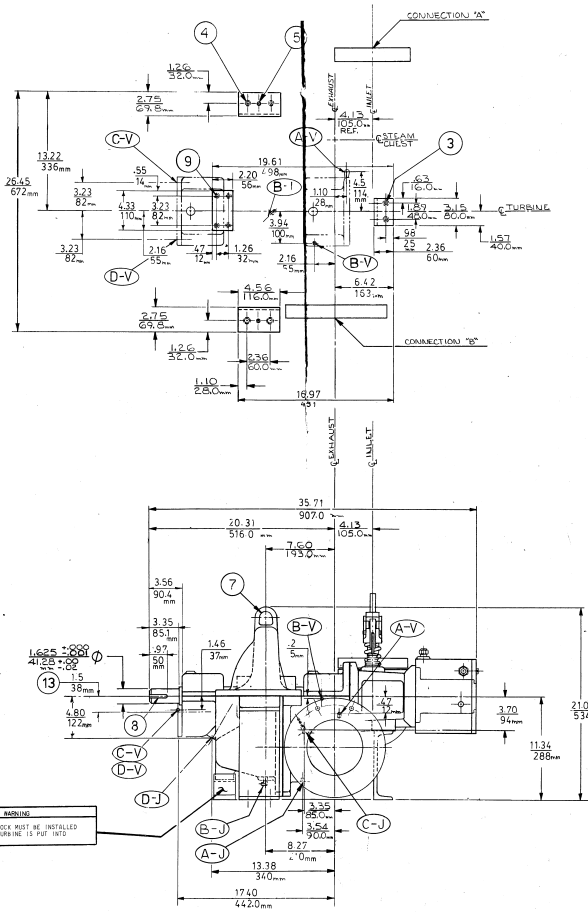

WARNING

GUIDE BLOCK MUST BE INSTALLED BEFORE TURBINE IS PUT INTO SERVICE.

DRESSER INDUSTRIES
TURBODYNE DIVISION
WELLSVILLE, NEW YORK
TURBINE INDEX SHEET
SINGLE STAGE

SERIAL NO. 37616-000 NO. UNITS 1 S. O. U-23524

CUSTOMER WORTHINGTON PUMP ORDER NO. Y-750632-035-C

TO BE USED BY INC. D.O. BALTIMORE 10-51065

LOCATION WASHINGTON, D.C. ITEM NO.

DRIVEN MACHINE COND. PUMP

CERTIFIED PRINT LE-178371 SHIPMENT DUE 09/09/99

TYPE 302T POWER 8.3HP ROTATION CW RPM 1760

STEAM PRESS. 100PSIG STEAM TEMP. 338F EXHAUST 15PSIG

STEAM RATE STEAM RATE 163.5LB/HP-HR

TYPE GOV. TG-13L SENTINEL VALVE SETTING 110 PSIG

VALVE BODY 3 IN. FLANGE 600LB. R.F. LOCATION RIGHT VALVE 1 1/3

EXHAUST 8 IN FLANGE 150LB F.F. LOCATION LEFT OIL BATH LUBRICATION

RELIEF VALVE SETTING START 110PSIG FULL OPEN 120PSIG TO PASS 140LB/HR

SPEED CHANGER +5% -15% EMERGENCY TRIP 2125 R. P. M.

TOWL AIR VS SPEED RELATIONSHIP 3 PSI MIN RPM 15 PSI MAX RPM

H. S. COUPLING NONE FURNISHED BY

"L" COUPLING NONE FURNISHED BY

CAST STEEL GOV END-NODULAR IRON COVER AND DISTANCE
UNITUDINAL LE-178374-N
ROD-TRIP LINKAGE LE-176355-N
STM CHEST & LINKAGE - LE-178394-N

FURNISH 1 HAND VALVE

WRITTEN BY R.R. Blank APPROVED BY DATE 7/20/98

	KG.	LBS.
TURBINE	272.	600
APPROXIMATE WEIGHT OF UPPER HALF OF TURBINE CASING	27.	60
APPROXIMATE WEIGHT OF TURBINE ROTOR	23.	50

CUSTOMER'S MAJOR CONNECTIONS

CONNECTION	SIZE	RATING	D.D.	B.C.	NO. HOLES	DIA. HOLES		RAISED FACE	REMARKS
"A"	.00 / 7.-.25mm	600	8.23 / 209.5mm	6.62 / 168.3mm	8	3/4-10		.25 X 6.00 / 6.4 X 127.0mm	SEE NOTE #1 15
"B"	.00 / 15.-.4mm	150	11.82 / 300.3mm	9.50 / 241.3mm	8	3/4-10		NONE	SEE NOTE #1

CUSTOMER'S AUXILIARY CONNECTIONS

	CONNECTION	NO.	SIZE & TYPE	VALVE REQ'D	VALVE SUPPLIED BY	PIPE TO	REMARKS
A-J	STEAM RING DRAIN	1	1/4 NPT	YES	CUSTOMER	ATMOS. OR OPEN DRAIN	
B-J	TURBINE CASING DRAIN	1	3/8 NPT	YES	CUSTOMER	ATMOS. OR OPEN DRAIN	
C-J	GOVERNOR END - PACKING CASE LEAKOFF	1	1/8 NPT	NO	----	ATMOS. OR OPEN DRAIN	
D-J	DRIVE END PACKING CASE LEAKOFF	1	1/8 NPT	NO	----	ATMOS. OR OPEN DRAIN	
E-J	STEAM CHEST DRAIN	1	1/2 NPT	YES	CUSTOMER	ATMOS. OR OPEN DRAIN	
F-J	VALVE STEM LEAKOFF	2	1/4 NPT	NO	----	ATMOS. OR OPEN DRAIN	
A-V	GOV. END BEARING CASE COOLING WATER SUPPLY	1	1/4 NPT	NO	NONE	SOURCE OF COOLING WATER	SEE NOTE #11
B-V	GOV. END BEARING CASE COOLING WATER DISCHARGE	1	1/4 NPT	YES	CUSTOMER	DRAIN	SEE NOTE #11
C-V	DRIVE END BEARING CASE COOLING WATER SUPPLY	1	1/4 NPT	NO	NONE	SOURCE OF COOLING WATER	SEE NOTE #11
D-V	DRIVE END BEARING CASE COOLING WATER DISCHARGE	1	1/4 NPT	YES	CUSTOMER	DRAIN	SEE NOTE #11

PIPING CALCULATIONS

1. THE TOTAL RESULTANT FORCE AND TOTAL RESULTANT MOMENT IMPOSED ON THE TURBINE AT ANY CONNECTION MUST NOT EXCEED THE FOLLOWING:

$$F = \frac{6-M}{3}$$

CONNECTION	6
INLET	1501
EXHAUST	3006

F = RESULTANT FORCE (POUNDS) INCLUDING PRESSURE FORCES WHERE UNRESTRAINED EXPANSION JOINTS ARE USED AT THE CONNECTION EXCEPT ON VERTICAL EXHAUSTS FULL VACUUM LOAD IS ALLOWED ON VERTICAL DOWN EXHAUST FLANGES. IT IS NOT INCLUDED AS PART OF THE PIPING LOAD.

M = RESULTANT MOMENT, POUND FEET

2. THE COMBINED RESULTANTS OF THE FORCES AND MOMENTS OF THE INLET AND EXHAUST CONNECTIONS, RESOLVED AT THE CENTERLINES OF THE EXHAUST CONNECTION MUST NOT EXCEED THE FOLLOWING TWO CONDITIONS:

   a. THE RESULTANTS MUST NOT EXCEED: $F_E = \frac{1677 - M_E}{2}$

   F_E = COMBINED RESULTANT OF INLET AND EXHAUST FORCES, POUNDS

   M_E = COMBINED RESULTANT OF INLET AND EXHAUST MOMENTS, AND MOMENTS RESULTING FROM FORCES, POUND FEET

   b. THE COMPONENTS OF THESE RESULTANTS SHALL NOT EXCEED:

   F_x = 335 POUNDS M_x = 1677 POUND FEET

   F_y = 839 POUNDS M_y = 839 POUND FEET

   F_z = 671 POUNDS M_z = 839 POUND FEET

3. FOR TURBINES WITH A VERTICAL EXHAUST AND AN UNRESTRAINED EXPANSION JOINT AT THE EXHAUST, CALCULATE THE VERTICAL FORCE COMPONENT ON THE EXHAUST CONNECTION EXCLUDING PRESSURE LOADING. COMPARE THIS WITH 1/6 OF THE PRESSURE LOADING ON THE EXHAUST. USE THE LARGER OF THE TWO VALUES FOR VERTICAL FORCE COMPONENT ON THE EXHAUST CONNECTION.

4. THESE VALUES OF ALLOWABLE FORCE AND MOMENT PERTAIN TO THE TURBINE STRUCTURE ONLY. THEY DO NOT PERTAIN TO THE FORCES AND MOMENTS IN THE CONNECTING PIPING. FLANGE AND FLANGE BOLTING SHOULD NOT EXCEED THE ALLOWABLE LOADS AS DEFINED BY APPLICABLE CODES AND REGULATORY BODIES.

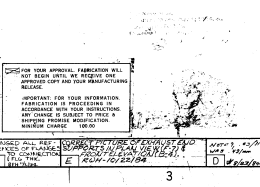

M.C.J. (IA SO FIG. 6) SUBMITTAL & RECAPPROVAL

JUL 1 0 1998

M

JUN 1 5 1998

FOR YOUR APPROVAL. FABRICATION WILL NOT BEGIN UNTIL WE RECEIVE ONE APPROVED COPY AND YOUR MANUFACTURING RELEASE.

IMPORTANT: FOR YOUR INFORMATION, PLEASE NOTE THE FOLLOWING IN ACCORDANCE WITH YOUR INSTRUCTIONS ANY CHANGE IS SUBJECT TO PRICE & SHIPPING PROMISE MODIFICATION MINIMUM CHARGE 100.00

F	CHANGED ALL REF. DIMENSIONS OF FLANGES TO CONNECTION STA. TYPE	E	CHANGED PICTURE OF EXHAUST END SUPPORTS (LIFTING LUGS) & ADDED TURBINE WEIGHT. RGH-10/23/98	D	NOTE 3 +3/-0mm WAS +2/-0mm ADDED NOTE 15 WAS NOTE 13 RGH 11/2/98	C ADDED NOTE 13 & 14 RGH 10/28/98
B	REVISED NOTE 2 SEE NOTE 15 RGH 10/28/98	A	REVISED QUOTE BLOCK ADDED "LE" PREFIX WHERE CUST. NUMBER WAS 12" LONG RGH 10/28/98			

Turbodyne
Steam Turbines

Dresser-Rand
Wellsville Operation
Wellsville, New York 14895

DRAWN	RAY HOBERG	DATE	JUNE 21/1983
CHECKED		SCALE	1:6
SUPERVISOR		FRAME	302-1V
APPROVED		PART NO.	DAR18031

OUTLINE, SST 302T

LE-178371

NOTES:
THIS DRAWING AND INFORMATION THEREON IS THE PROPERTY OF TURBODYNE DIVISION OF DRESSER INDUSTRIES, INC. AND MUST BE MADE BLANK OR COPIED. - IS SUBJECT TO RETURN ON REMOVAL.

DRAWING SIZE D (ANSI)

Declassified in Part - Sanitized Copy Approved for Release 2012/07/02 : CIA-RDP02-06296R000900050017-2