Approved For Release 2005/07/12 : CIA-RDP02-06298R000900110002-1

MCI CONSTRUCTORS, INC.

7649 Dynatech Court
Springfield, Virginia 22153

Address replies to:
P O Box 2786
Springfield, Virginia 22152

Telephone (703) 569-8010
TWX 710-831-0333 MCI ALE

CLIENT: General Services Administration

PROJECT: CIA Headquarters Expansion
Bid Package 3 - Powerhouse Modifications

SUBMITTAL DATE: October 18, 1985

SUBMITTAL NUMBER: 128

SPEC. SECTION: 15616 VENDOR: Berkness Control and Equipment Corp.

EQUIPMENT DESCRIPTION: Boiler Blowoff System

STATUS: Approved for submittal as clarified

C.Q.C. REPRESENTATIVE: BF

Brian J. Fleming

VARIATIONS AND CLARIFICATIONS

1. This operation and maintenance manual submittal applies to the boiler blowoff system as described in Specification Section 15616, Paragraph 19.

Approved For Release 2005/07/12 : CIA-RDP02-06298R000900110002-1

Approved For Release 2005/07/12 : CIA-RDP02-06298R000900110002-1

SH&G Submittal System – Add/Resubmit Form

Logged

MCI CONSTRUCTORS INC — Contractor's Name
7649 DYNATECH CT, SPRINGFIELD VA 22153 — Address, State
10-18-85 — Mail Date

Type (1)	Project No. (2–8)	Contr. Suffix (9–14)	Spec. Section (15–21)	Page (22–24)	Line (25–26)	Actual Date In (27–32)	Prom. Date Out (33–38)	Manufacturer / Supplier (39–62)
A	13155	C	15616	301	28			WILSON/BC+E

Type: A Add, R Resubmit

C.A. Name: E. MEDLING

Discipline Routing (63–65, 66–68, 69–71, 72–74, 75–77) — Responsibility (78–80)

Routing Order

Checkers Name

Distribution

1. EDP ☐ KP & KV

REVIEWED BY: CHERYL HERBERICH

BF

Dup. Card3 (1, 2-26)	Ref. No. (27–30)	Type (31–33)	Description (34–69)
4	1	lts	MCI CLARIFICATION LETTER
4	2	bkl	OPERATION AND MAINTENANCE MANUAL-
4			BOILER BLOWOFF SYSTEM
4			
4			
4			
4			
4			
4			
4			
4			
4			
4			
4			

7-2-75

RECEIVED 1985

Page 1 of 1 Pages

Approved For Release 2005/07/12 : CIA-RDP02-06298R000900110002-1

Approved For Release 2005/07/12 : CIA-RDP02-06298R000900110002-1

a division of Kewanee Boiler Corporation
P.O. Box 24084 Oakland, Ca. 94623
2985 Ford Street Oakland, Ca. 94601 · (415) 261-8737

Owner's manual

JOB NUMBER: W 14032

JOB NAME: CIA POWER HOUSE

JOB LOCATION: LANGLEY, VA.

M.C.I.
CIA BID PKG. #3
SUBMITTAL #
RESUBMITTAL #
REC/APRVL

Model: 83 U3F BLOWDOWN SEPARATOR / 20 MWG SILENT EXHAUST HEAD

System Output: _____ LB/HR

Boiler Feed Pump Capacity: _____ HP _____ GPM @ _____ 'TDH

Recycle Pump Capacity: _____ HP _____ GPM @ _____ 'TDH

Condensate Pump Capacity: _____ HP _____ GPM @ _____ 'TDH

Electrical System: Supply _____ Volt, _____ Phase, _____ Cycle

Control Circuit _____ Volt, _____ Phase, _____ Cycle

Approved For Release 2005/07/12 : CIA-RDP02-06298R000900110002-1

Approved For Release 2005/07/12 : CIA-RDP02-06298R000900110002-1

SEPARATORS WITH FLANGED CONNECTIONS

ALL MODELS ARE A.S.M.E. CODE VESSELS.

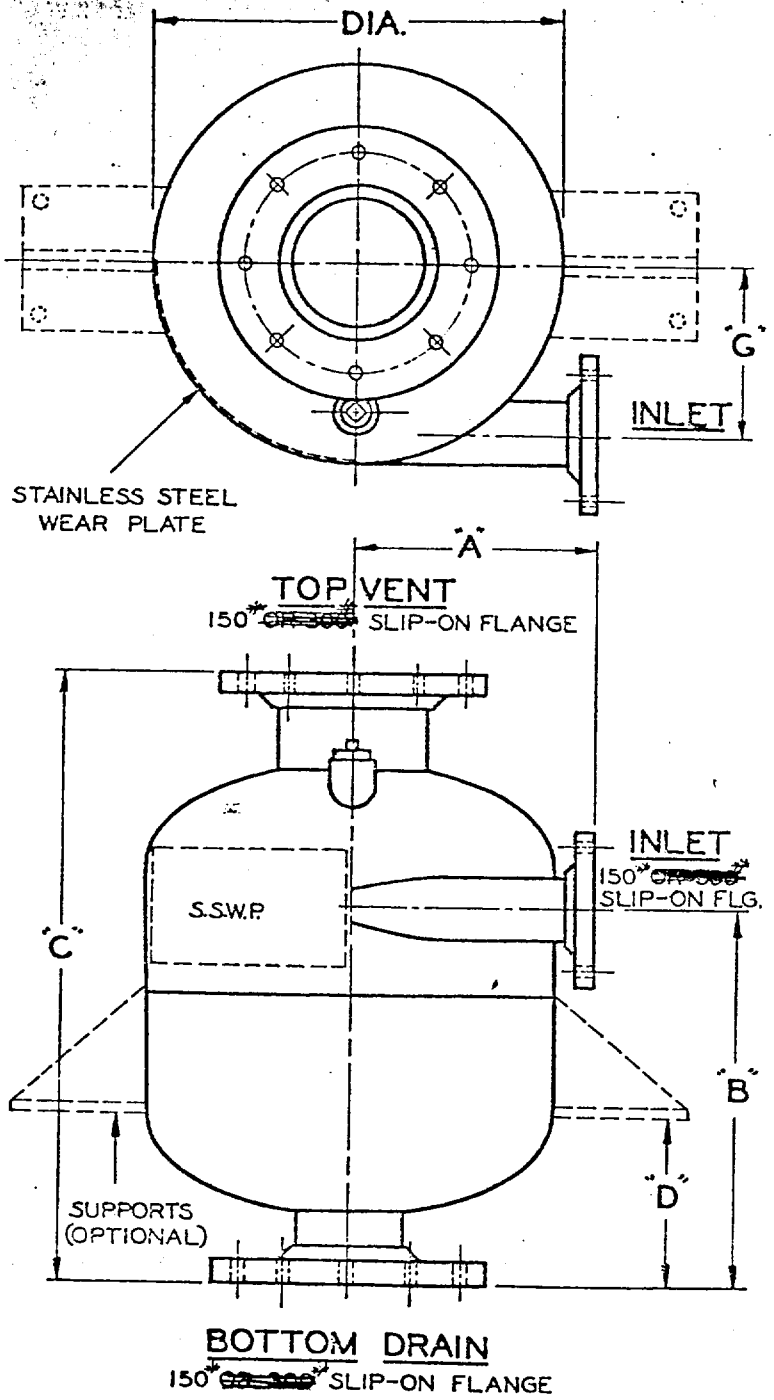

FLANGES

	150#	300#
INLET	✓	
VENT	✓	
DRAIN	✓	

MODELS

8" DIAMETER					16" DIAMETER				
	MODEL	M.T.	WT. ①	WT. ②		MODEL	M.T.	WT. ①	WT. ②
	83-US3F	5/16	48	53	✓	83-U3F	5/16	158	186
						83-NB3F	3/8	173	201
	77-UMS3F	3/16	41	46		77-UM3F	3/16	125	153

	INLET	"G"		INLET	"G"
	1/2"	3 3/8"		1"	7 3/16"
	3/4"	3 1/4"		1 1/4"	7"
	1"	3 3/16"		1 1/2"	6 7/8"
				2"	6 5/8"
			✓	2 1/2"	6 3/8"
VENT			VENT		
	2 1/2"	3"	✓	5"	6"
DRAIN			DRAIN		
	2 1/2"	3"		4" ✓ 5"	6"

M.T. = MATERIAL THICKNESS IN INCHES
WT. = ESTIMATED WEIGHT IN POUNDS
① WITH 150# FLANGES
② WITH 300# FLANGES

DIMENSIONS

	DIA.	"A"	"B"	"C"	"D"
	8"	6"	9 1/4"	14 3/4"	4 1/2"
✓	16"	10"	15 7/8"	26"	7 1/8"

Ⓐ WEIGHTS ADDED 6-22-73

CIA POWER HOUSE
W 14032

WILSON ENGINEERING CORPORATION
6. NORTH MICHIGAN AVE.
CHICAGO, ILL. 60602

DRAWN: 5-14-70 A.B.V.
APPROVED:
REVISED: 6-22-73

70-53

Approved For Release 2005/07/12 : CIA-RDP02-06298R000900110002-1

Approved For Release 2005/07/12 : CIA-RDP02-06298R000900110002-1

AFTERCOOLERS-FLANGED CONNECTIONS

Type – MANUAL or ELECTRIC CONTROL
Models – MEF

Selection	Size in inches	FLANGES 150 lbs. Selection	Weight in lbs.	300 lbs. Selection	Weight in lbs.
	2½		25		29
	3		30		38
	4		44		65
	5		60		93
	6		68		106
	8		126		182

Cold Water Supply Inlet

½" Couplings for Temperature Controller and Thermometer

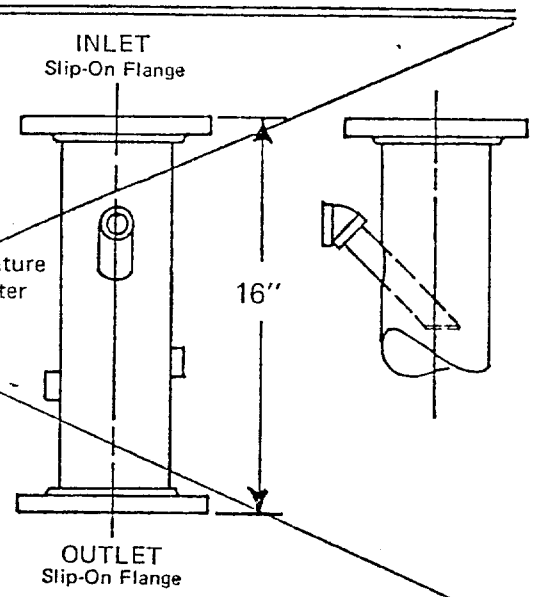

Type – AUTOMATIC TEMPERATURE REGULATOR CONTROL
Models – TRF

JOB # W14032

NOTE: For ¾" Temperature Regulating Control Package, Aftercooler Type TRF will look like MEF above.

Selection	Size in inches	FLANGES 150 lbs. Selection	Weight in lbs.	300 lbs. Selection	Weight in lbs.
	2½		25		29
	3		30		38
	4		44		65
✓	5		60		93
	6		68		106
	8		126		182

Cold Water Supply Inlet

1" Temperature Regulator Bulb Connection

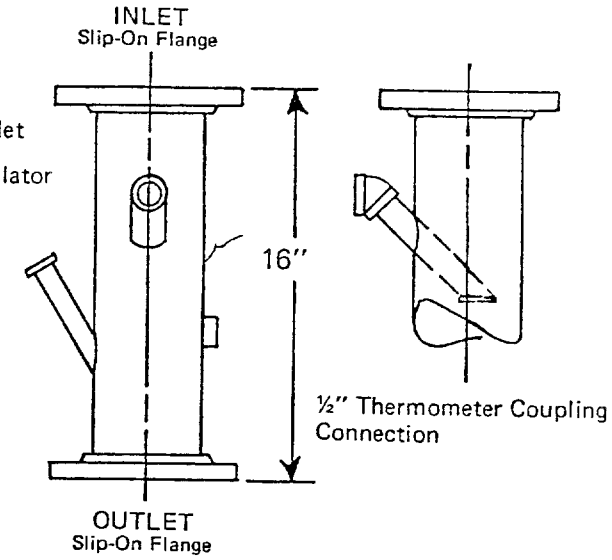

NOTES:
1. Required for tempering blowoff discharge.
2. Cold water supply inlet (std. elbow) sized to meet job requirements – 2 "
3. Aftercooler inlet must match separator bottom drain connection.
4. Used for multiple unit blowoff system see drawings No. 92-BSTM and 95-BSTE.

WILSON ENGINEERING
INDUSTRIAL STEAM
a division of Kewanee Boiler Corporation
P.O. Box 24084 Oakland, Ca. 94623
2985 Ford Street Oakland, Ca. 94601 · (415) 261-8737

DRAWING 70-56
Effective: 6/1/83
Supersedes: 5/8/70

Approved For Release 2005/07/12 : CIA-RDP02-06298R000900110002-1

Approved For Release 2005/07/12 : CIA-RDP02-06298R000900010002-1

GATE VALVE:

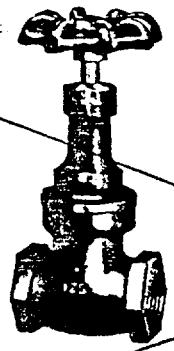

Specifications and Dimensions for Gate Valves

Selection	SIZE in inches	END to END in inches	CENTER to TOP, Open in inches	HANDWHEEL DIA. in inches	WEIGHT in lbs.
	½	1-15/16	4-5/8	2-1/4	1.1
	¾	2-3/16	4-7/8	2-5/8	1.5
	1	2-1/2	7	2-13/16	2.3
	1¼	2-3/4	8-1/4	3-7/16	3.4
	1½	3	9-1/4	3-3/4	4.7
	2	3-7/16	11-3/4	4-3/8	8.1
	2½	4-1/16	14	5-5/16	13.3

Y-STRAINER:

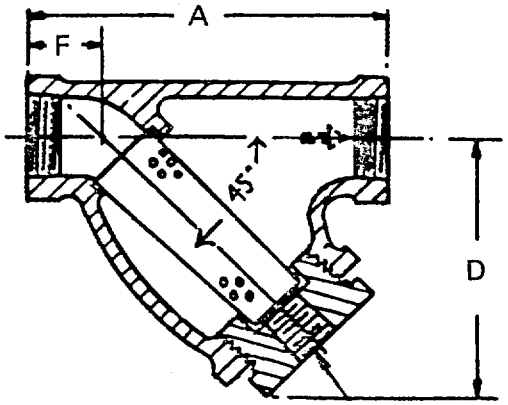

G=Size of Blow Off

Selection	SIZE in inches	DIMENSIONS in inches				WEIGHT in lbs.
		A	D	F	G	
	½	3-7/8	3	13/16	½	2¼
	¾	3-7/8	3	13/16	½	2¼
	1	5	4	1-1/4	¾	4½
	1¼	5-1/2	4-1/2	1-1/4	¾	6
	1½	6	5	1-1/4	1	8
✓	2	7-1/4	5	1-7/16	1	14
	2½	9	6-5/16	1-5/8	1¼	26

CHECK VALVE:

Specifications and Dimensions for Check Valves

Selection	SIZE in inches	END to END in inches	CENTER to TOP in inches	WEIGHT in lbs.
	½	2-5/8	1-7/8	.70
	¾	3-1/8	2-1/8	1.2
	1	3-11/16	2-1/2	1.7
	1¼	4-7/16	3	2.5
	1½	4-3/4	3-1/4	3.3
✓	2	5-5/8	3-7/8	5.4
	2½	6-13/16	4-1/2	8.5

3" DIAL THERMOMETER:

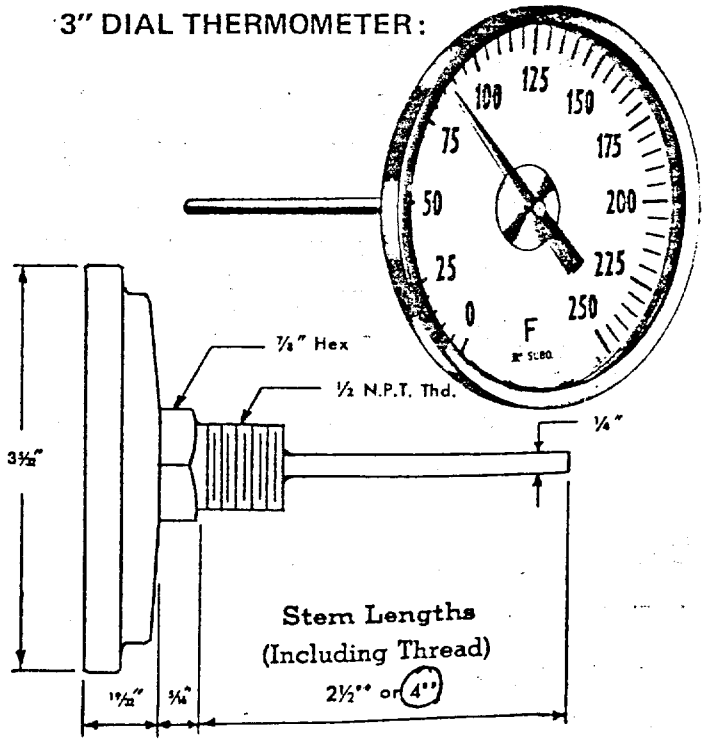

Approved For Release 2005/07/12 : CIA-RDP02-06298R000900010002-1

OTHER SIZES AND MAKES AVAILABLE UPON REQUEST

Approved For Release 2005/07/12 : CIA-RDP02-06298R000900110002-1

COOLING WATER CONTROL ACCESSORIES

TEMPERATURE REGULATORS:

JOB# W14032

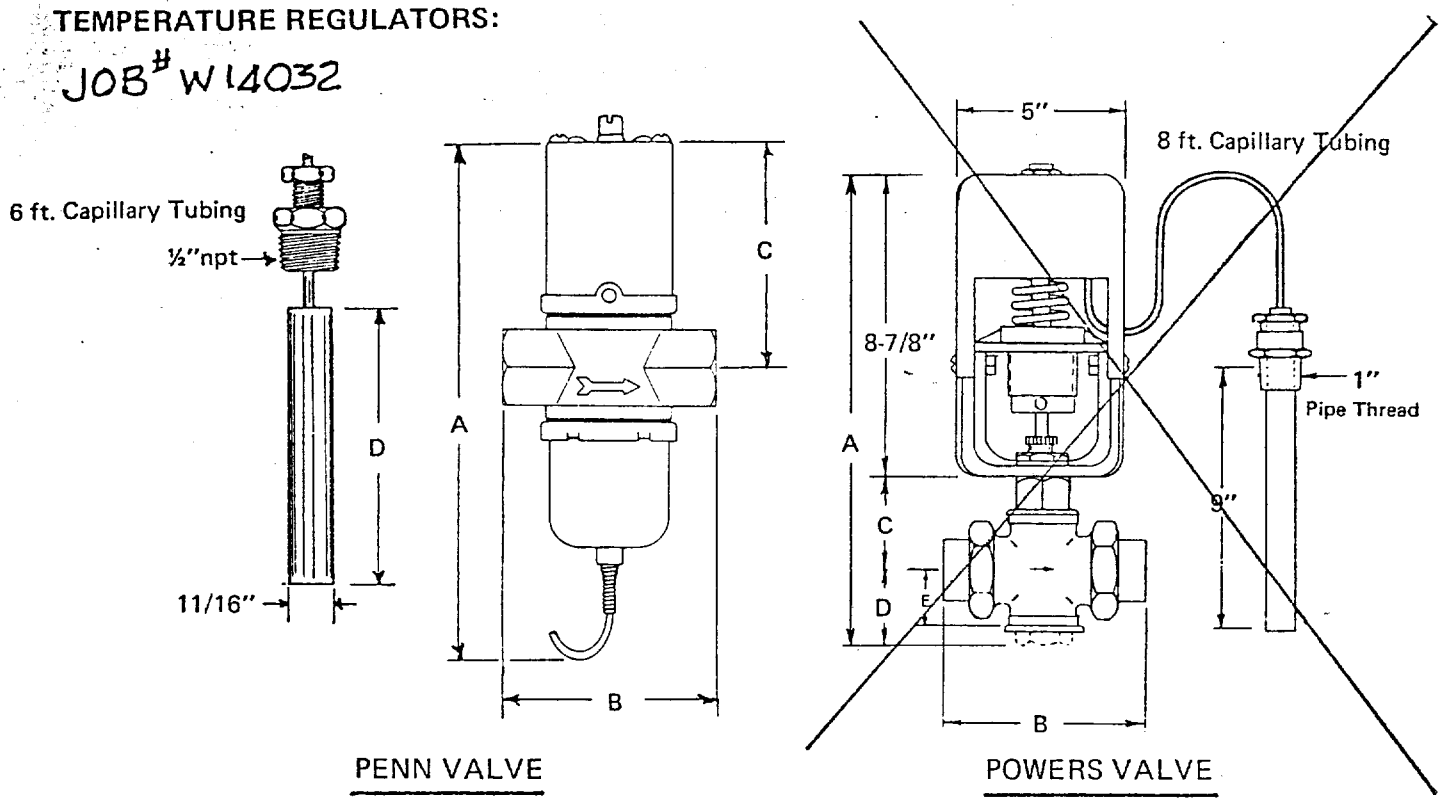

Specifications and Dimensions for Regulators

VALVE TYPE	Selection	VALVE SIZE in inches NPT	DIMENSIONS in inches A	B	C	D	E	APPROX. SHIP. WT. in lbs.
Penn Valve		¾	7-29/64	3-9/16	3-51/64	3-1/4	---	5.6
		1 *	10-13/64	4-27/32	5-31/64	6	---	10
		1¼ *	10-37/64	4-55/64	5-43/64	6	---	11.8
		1½ *†	10-37/64	5-5/16	5-43/64	6	---	17.5
	✓	2 *†	12-33/64	6-5/8	6-15/32	10	---	27
		2½ *†	12-33/64	6-3/4	6-15/32	10	---	33
Powers Valve		2	18-1/8	9-5/8	4-7/8	4-3/8	3-5/8	36
		2½ *†	22	9-1/8	5	5-3/8	5-3/8	88

* Cast Iron Body † 125 lb. Flanged Ends

INSTALLATION – THERMOSTATIC BULB

Install bulb vertically pointing downward or in any position where the end of the bulb will be lower than the tank bushing. If installed horizontally, the notch on the bulb neck must face upward.

over

WILSON ENGINEERING
INDUSTRIAL STEAM
a division of Kewanee Boiler Corporation
P.O. Box 24084 Oakland, Ca. 94623
2985 Ford Street Oakland, Ca. 94601 (415) 261-9737

Effective: 6/1/83
Supersedes: 12/1/72

Approved For Release 2005/07/12 : CIA-RDP02-06298R000900110002-1

Approved For Release 2005/07/12 : CIA-RDP02-06298R000900110002-1

WILSON ENGINEERING
P.O. Box 2000 Telex 910-366-7526
OAKLAND, CA 94623

CAST IRON EXHAUST HEAD

Protect your roof and building from the hot water in your exhaust steam with a Cast Iron Exhaust Head. This exhaust head is, as far as we know, the only one on the market with a ribbed baffle plate. The clearance areas are large, and we will guarantee that this head will cause no back pressure. It is made of cast iron and will last a lifetime.

The steam entering the exhaust head is directed by two horizontal openings against the baffle plates, where the condensed water is trapped and drained to the well of the exhaust head.

The outlet area is larger than the inlet area permitting the steam to pass from it without the hissing noise attendant to some exhaust heads.

Pipe Size	2"	2½"	3"	3½"	4"	5"	6"	8"	10"	12"	14"	16"	18"
Dimension A	7"	7"	8½"	8½"	10"	12½"	16"	18"	21"	24"	23½"	29"	31"
Dimension B	7"	7"	8½"	8½"	10"	12½"	16"	18"	21"	24"	28"	32"	36"
Drain	1"	1"	1"	1"	1"	1¼"	1¼"	1¼"	2"	2½"	2½"	3"	3"
Weight	20	20	32	32	54	70	160	230	350	460	700	800	1100
Capacity*	380	380	800	800	1280	1600	2300	4000	6300	9100	11800	14700	19400

*Capacity Lbs. Exhaust Steam/Hour based on 5000 ft./min- velocity at atmospheric pressure.

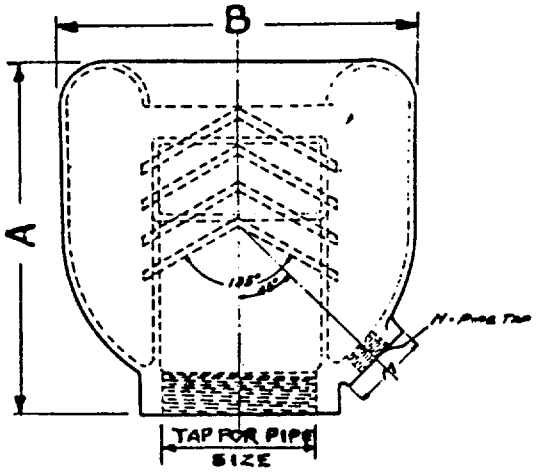

Note:

1) 2"— 5" Screwed End

2) 6"— 12" Flanged End

3) 14" and larger Fitted for Studs

JOB # W 14032

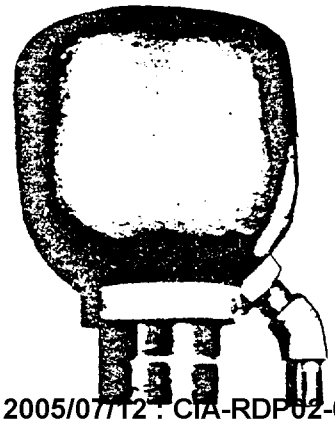

Approved For Release 2005/07/12 : CIA-RDP02-06298R000900110002-1

Approved For Release 2005/07/12 : CIA-RDP02-06298R000900110002-1

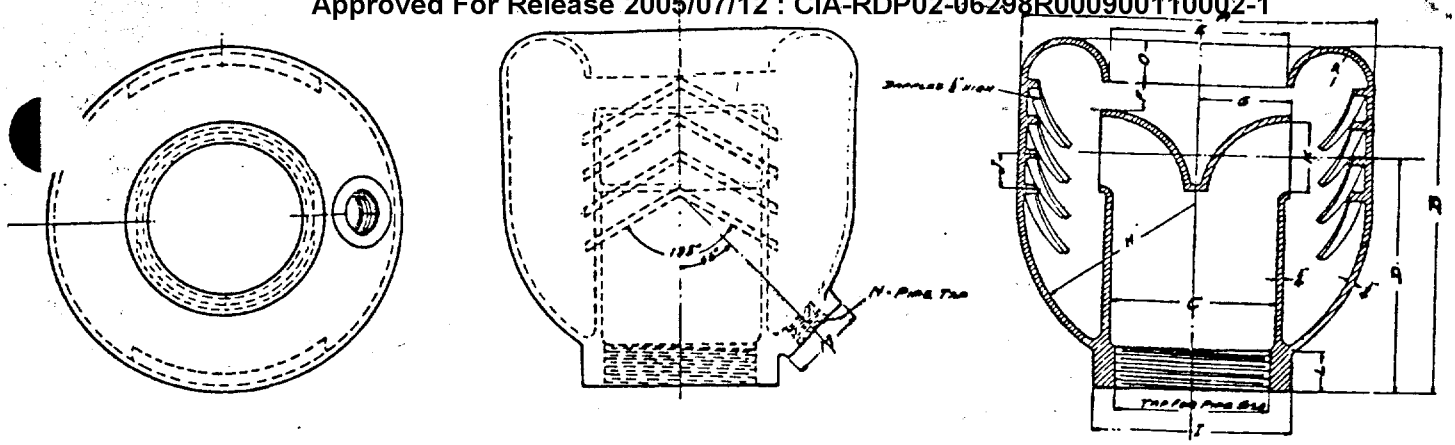

Size	A	B	C	D	E	F	G	H	I	J	K	L	M	N	O	P
2" - 2½"	7"	7"	3"	4⅜"	2¾"	¾"	1⅞"	3¼"	4"	½"	1¼"	¾"	1¾"	1"	1 1/16"	1 3/16"
3" - 3½"	8½"	8½"	4¼"	5⅜"	4¾"	⅞"	2½"	4"	5½"	1"	1¾"	1¼"	2"	1"	1 5/16"	1 11/16"
4" - 4½"	10"	10"	5"	6⅜"	5"	1"	3"	4¾"	6½"	1¼"	2¼"	1¼"	2"	1"	1¼"	1"
5"	12½"	12½"	5¾"	8 3/16"	6¼"	1¼"	3⅜"	6"	7"	1¼"	2 "	1½"	2½"	1¼"	1 5/16"	1 5/16"

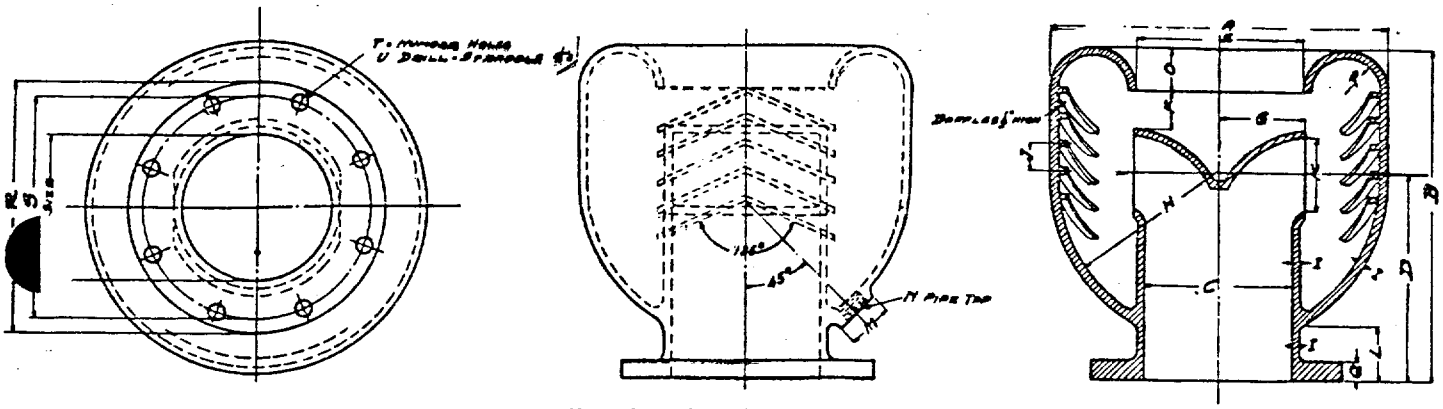

Size	A	B	C	D	E	F	G	H	I	J	K	L	M	N	O	P	Q	R	S	T	U
6"	16"	16"	6"	10½"	7"	1½"	3½"	7¾"	¼"	1½"	3"	2½"	2½"	1¼"	2¼"	2"	1"	11"	9½"	8	⅞"
8"	18"	18"	8"	11½"	9"	2"	4⅜"	8¾"	¼"	1½"	4"	3"	2½"	1¼"	2¼"	2"	1⅛"	13½"	11¾"	8	⅞"
10"	21"	21"	10"	13⅛"	11"	2½"	5¾"	10⅛"	⅜"	1¾"	5"	3½"	3½"	2"	2½"	2⅛"	1 3/16"	16"	14¼"	12	1"
12"	24"	24"	12"	15⅞"	13"	3"	7½"	11⅝"	⅜"	2"	6"	4½"	5"	2½"	2¾"	2⅜"	1¼"	19"	17"	12	1"

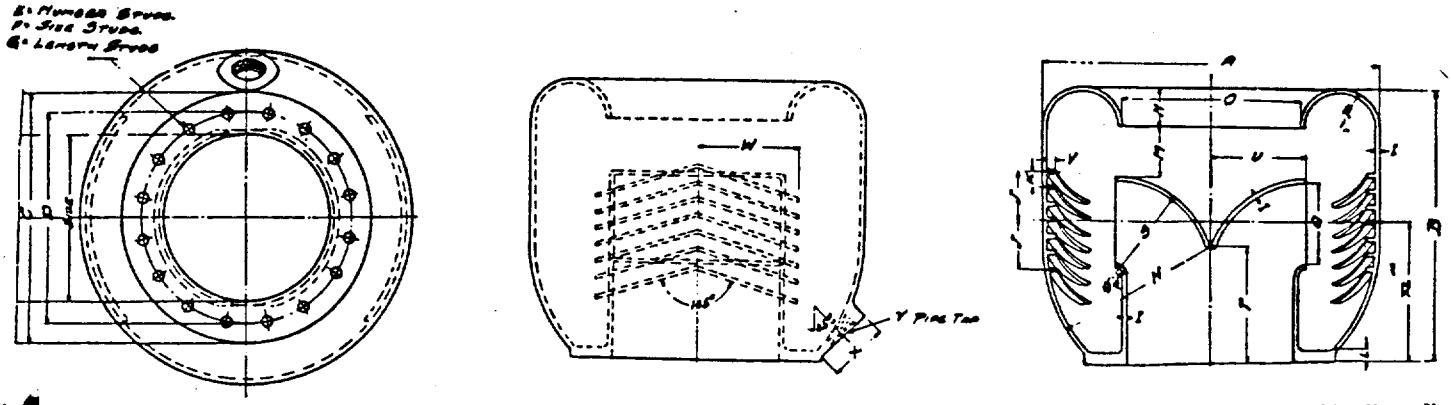

Size		B	C	D	E	F	G	H	I	J	K	L	M	N	O	P	Q	R	S	T	U	V	W	X	Y
14"		23½"	21"	18¼"	12	1"	3¾"	14"	⅜"	5¼"	1¾"	1⅜"	3½"	3¼"	15"	2⅛"	7"	12⅞"	8⅜"	10½"	8¼"	1"	9"	5"	2½"
16"	32"	29"	23½"	21¼"	16	1"	3⅞"	16"	⅜"	5¼"	1¾"	1 5/16"	4"	3¾"	17"	3⅜"	8"	16⅞"	9⅜"	12"	9¼"	1"	10"	6"	3"
18"	36"	31"	25"	22¾"	16	1⅛"	4¼"	18"	⅞"	7"	1¾"	1 9/16"	4½"	4¼"	19"	3 13/16"	9"	17 3/16"	10 13/16"	14½"	10¼"	1"	11"	6"	3"
20"	40"	33"	27½"	25"	20	1⅛"	4½"	20"	⅞"	7"	1¾"	1 9/16"	5"	4¾"	21"	4 3/16"	10"	17 13/16"	11 13/16"	16"	11¼"	1"	13"	6"	3"
24"	48"	38"	32"	29½"	20	1¼"	5"	24"	⅞"	8"	2"	1⅞"	6"	5¾"	25"	5 3/16"	12"	19 13/16"	13 13/16"	19½"	13¼"	1¼"	15"	7½"	4"

Approved For Release 2005/07/12 : CIA-RDP02-06298R000900110002-1

Approved For Release 2005/07/12 : CIA-RDP02-06298R000900110002-1

INSTALLATION, OPERATING AND PARTS DATA FOR WILSON BLOWDOWN EQUIPMENT

INSTALLATION

Job requirements and boiler room space determine the best arrangement for each installation.

The top vent piping to atmosphere should be independent and as direct as possible.

Aftercooling requirements may be met by any of the three types of aftercoolers and control systems shown in the accompanying schematic installation drawings.

The drain connection from the separator or aftercooler should have free flow to sewer or other disposal piping, with a minimum number of elbows, etc. Adequate pitch on horizontal drain piping is required and long runs should be avoided.

Installation Nos. 1 & 3

Se[illegible] inlet above the boiler blowoff piping. On low pressure boiler insta[illegible]tions the height above the boiler blowoff piping should be kept at a minimum. Where a blowoff valve is used to drain a dead boiler, a two-way drain cock should be provided, to drain water by gravity.

Installation No. 2

Separator inlet below the boiler blowoff piping. This installation provides full drainage of a dead boiler and blowoff piping between each blowdown period.

Installation No. 4

Separator can be used in a battery of two or more boilers. The separator inlet and piping from the boilers to the separator should remain the same size as the largest boiler blowoff connection.

OPERATION

No operating manual required. Normal procedure for blowing down boilers operates the WILSON separator.

PARTS LIST

No parts list required as there are no replaceable parts on WILSON separators or aftercoolers.

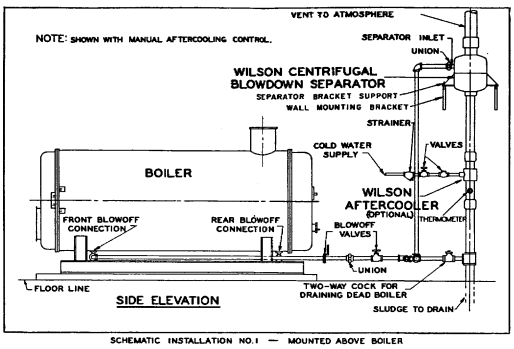

SCHEMATIC INSTALLATION NO. 1 — MOUNTED ABOVE BOILER

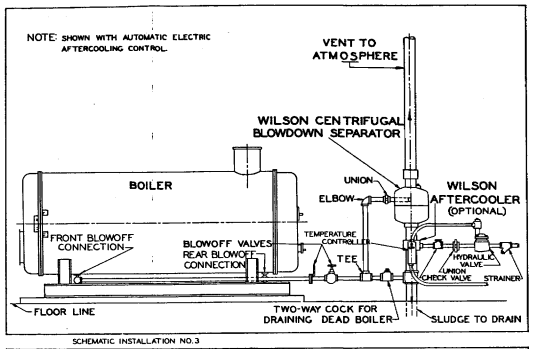

SCHEMATIC INSTALLATION NO. 3

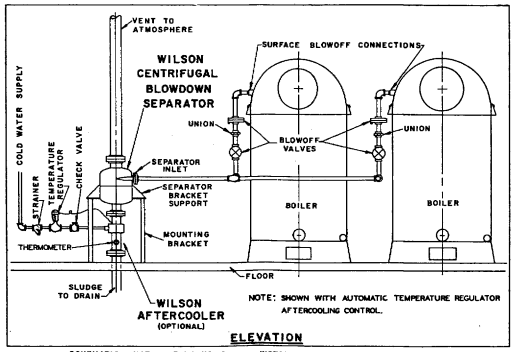

SCHEMATIC INSTALLATION NO. 2 — INSTALLED BELOW BLOWOFF CONNECTION

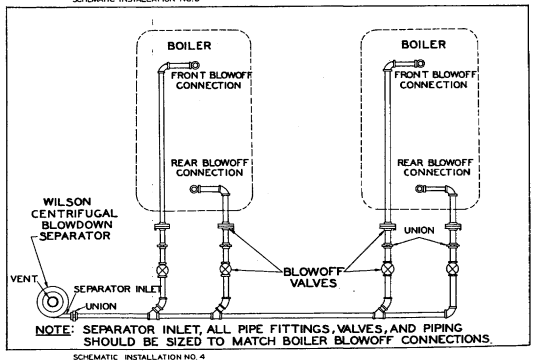

SCHEMATIC INSTALLATION NO. 4

Approved For Release 2005/07/12 : CIA-RDP02-06298R000900110002-1