Declassified in Part - Sanitized Copy Approved for Release 2014/04/03 : CIA-RDP78-03330A004200050004-2

R-F Transmitter Modular Sub-Assemblies

Bi-Monthly Progress Report No. 2
September 1, 1957 to November 1, 1957

Prepared by
Engineering Department
December 12, 1957

50X1

DCN No. W-064
Copy 1 of 10 copies
Consisting of 15
pages and 11 figures

Declassified in Part - Sanitized Copy Approved for Release 2014/04/03 : CIA-RDP78-03330A004200050004-2

Declassified in Part - Sanitized Copy Approved for Release 2014/04/03 : CIA-RDP78-03330A004200050004-2

TABLE OF CONTENTS

Section		Page
1	Summary	1
2	Introduction	2
3	3 to 6 Mc Type A1 Experimental Model System	3
	3.1 General	3
	3.2 Individual Modular Packages	3
	3.2.1 Rf Oscillator Module	3
	3.2.2 Rf Power Amplifier Module	4
	3.2.3 Sidetone Oscillator Module	5
	3.2.4 Antenna Coupler Module	6
	3.3 System Operation Procedure	7
4	Electro-Mechanical Design & Development	9
5	MCW (A2) and Speech (A3) Modulator Development	11
	5.1 General	11
	5.2 Microphone Amplifier - Speech Clipper and Filter	11
	5.3 Audio Power Amplifier	12
6	Components and Materials Evaluation	13
	6.1 General	13
	6.2 Miniature Capacitors	13
	6.3 Miniature Resistors	14
7	Plans for the Third Bi-Monthly Period	15

LIST OF ILLUSTRATIONS

Figure	
1	Schematic Diagram of Experimental Model A1, 1/2 W System
2	Photograph (View 1) of Experimental Model A1, 1/2 W System
3	Photograph (View 2) of Experimental Model A1, 1/2 W System
4	Photograph of VHF Suppressor
5	Attenuation vs. Frequency of VHF Suppressor
6	Input Impedance vs Frequency of VHF Suppressor
7	Power Transfer Efficiency vs. Frequency of VHF Suppressor
8	Experimental Low Noise Pre-Amplifier (Schematic)
9	Experimental 5 watt Modulator Power Amplifier (Schematic)
10	Table 1, Comparison of Capacitance and Q Qualification Test Measurements of Micamold MQ-15 Silver Mica and Vitramon Porcelain Capacitors
11	Resistance Temperature Characteristics

Declassified in Part - Sanitized Copy Approved for Release 2014/04/03 : CIA-RDP78-03330A004200050004-2

Declassified in Part - Sanitized Copy Approved for Release 2014/04/03 : CIA-RDP78-03330A004200050004-2

1. Summary

This report reviews the technical progress made during the second bi-monthly period of the engineering program. It also explains the status of technical development at the end of this period.

An experimental model 1/2 watt A1 system is described in detail.

Electro-mechanical devices designed especially for this application are discussed.

A brief description of speech modulator development is presented.

The results of miniature capacitor and resistor evaluation tests are analyzed.

Plans for the third period are revealed.

Declassified in Part - Sanitized Copy Approved for Release 2014/04/03 : CIA-RDP78-03330A004200050004-2

Declassified in Part - Sanitized Copy Approved for Release 2014/04/03 : CIA-RDP78-03330A004200050004-2

2. Introduction

The objectives of the initial phase are to perform the major portion of the basic engineering development required for the entire contract, and to produce a final prototype set of highly miniaturized, highly reliable type A1 emission basic modules for 1/2 watt low frequency band operation.

A 1/2 watt low frequency band A1 experimental system has been completed. Work is progressing to develop this system into the ultimate in size and reliability.

One group of engineers and technicians is developing the basic rf modules to cover the entire frequency range for either 1/2 watt or 5 watts of power. Another group is developing the transistorized modulator for MCW or speech use.

Only the cubical configuration has been applied in the construction of experimental modules thus far.

Declassified in Part - Sanitized Copy Approved for Release 2014/04/03 : CIA-RDP78-03330A004200050004-2

Declassified in Part - Sanitized Copy Approved for Release 2014/04/03 : CIA-RDP78-03330A004200050004-2

3. 3 to 6 Mc Type A1 Experimental Model System

3.1 General

Fig. 1 is a composite schematic diagram of the present 3 to 6 Mc type A1 Experimental Model System. It consists of four basic modules in the cubical shape varying in size from a 1-1/2 in. cube to a 2 in. cube. These are pictured in Figures 2 and 3. This system is capable of type A1 transmission over a crystal controlled frequency range of 3 to 6 Mc. If properly adjusted, it will deliver at the antenna post 1/2 watt or more of power to any load in the impedance range of 40±j40 (jx can be j0) ohms to 1200 ± j1200 (jX can be J0) ohms.

3.2 Individual Modular Packages

3.2.1 Rf Oscillator Module

The major change made in the previously reported design was to replace the CR-18/U parallel resonant mode crystal with the CR-19/U series resonant mode crystal. A more thorough analysis of this circuit revealed that the CR-18/U crystal was operating at its series resonant frequency rather than its anti-resonant frequency as it should. The oscillator circuit as shown in Fig. 1 is essentially a grounded base amplifier with an external current feed-back path through C101. The CR-19/U crystal unit presents a low impedance at its series resonant frequency, and therefore completes the rf ground path of the transistor base when it is plugged into the module. R101 completes the dc base circuit. L101 isolates the emitter rf circuit from the emitter dc bias circuit R102 and C104. The collector tank circuit

Declassified in Part - Sanitized Copy Approved for Release 2014/04/03 : CIA-RDP78-03330A004200050004-2

Declassified in Part - Sanitized Copy Approved for Release 2014/04/03 : CIA-RDP78-03330A004200050004-2

is tuned just below the low frequency (3 Mc) end of the band so no harmonic distortion will be generated as the crystal frequency is changed. The network R103, R104, C106 and C107 divides the battery 12v supply into a +2v supply to obtain an emitter bias current of 1.5mA, and a -10v collector supply. This network also provides voltage stabilization by equalizing any supply changes on the emitter and collector. The RCA drift type 2N384 transistor has been chosen in preference to the equivalent Philco microalloy diffused type because it is more readily available, and there is more (performance and application) technical information about it available. The oscillator frequency can be varied from 3 Mc to 6 Mc simply by changing the crystal. It will deliver 10 mw to a 50 ohm resistive load over this range. The dc power input for 10 mw output at 3 Mc is 12v at 5mA, and at 6 Mc it is 12v at 8mA.

The circuit is built on a printed circuit board in the top of a 1-1/2 inch cubical copper box. The crystal plugs into a teflon socket in the top with a grounding clamp provided to ground the crystal holder. A subminiature coaxial connector and teflon feed-throughs are used for rf output and dc power connections respectively.

R105 and R106 mounted in the bottom of the box drop the 12v supply to furnish 6.3v at 450mA to the rf amplifier tube filament.

3.2.2. Rf Power Amplifier Module

To eliminate the grid tank tuning adjustment that was used in the original design, the slug tuned input transformer has been replaced with a

Declassified in Part - Sanitized Copy Approved for Release 2014/04/03 : CIA-RDP78-03330A004200050004-2

Declassified in Part - Sanitized Copy Approved for Release 2014/04/03 : CIA-RDP78-03330A004200050004-2

small toroidal wide-band transformer designated as T201 in Fig. 1. The output transformer T202 has been reduced in size, and converted from a rotating knob type adjustment to a sliding type adjustment. The reasons for these changes were to allow more rapid tuning across the band, and smaller packaging. The grid block keying method has been abandoned in favor of cathode keying to eliminate the necessity of a negative bias supply. With a B supply of +150 dc at 35 mAdc, it will deliver approximately 1 watt to a 50 ohm resistive load over the frequency range of 3 to 6 Mc. With a B supply of +135v dc at 30 mAdc, it will deliver approximately 3/4 watt. The required drive voltage at the input to T201 to obtain these power levels is 3 volts peak to peak over the band.

The amplifier is keyed "on" and "off" by switching the tube cathode ground return between ground and +50v dc. R203 provides sufficient grid bias to protect the tube when it is either "on" or "off".

The module is housed in a copper 1-3/4 inch cubical container. It serves as a heat sink and rf shield.

Power and keying leads are attached externally to teflon feed-through terminals. Input and output rf connections are made through sub-miniature coaxial connectors. These are to provide good low loss and shielded rf paths.

3.2.3 Side Tone Oscillator Module

The side tone 1 kc oscillator is designed around a Bogue Type 2N160A silicon transistor. It is keyed "on" and "off" simultaneously with the rf

Declassified in Part - Sanitized Copy Approved for Release 2014/04/03 : CIA-RDP78-03330A004200050004-2

Declassified in Part - Sanitized Copy Approved for Release 2014/04/03 : CIA-RDP78-03330A004200050004-2

amplifier. The switching action is accomplished by biasing the transistor into and out of an oscillatory state. It will oscillate continuously if the B supply is off because this biasing voltage is obtained from it. This circuit will also be used as the master oscillator for the 1 kc modulator.

The oscillator is built on a printed circuit board that forms the top of a 1-9/16 inch cubical box. Attached to the bottom of this box is a miniature hand key that is described in Section 4 of this report.

External power and keying leads are connected to teflon feed-throughs at the base of the box. Provision is made for connecting a head set and external key through sub-miniature tip jacks in the printed circuit board on the top.

3.2.4 Antenna Coupler Module

A VHF suppressor network is incorporated in the antenna coupler as shown in Fig. 1. The attenuation vs. frequency, impedance vs. frequency, and power transfer efficiency vs. frequency curves at room temperature for this network are illustrated in Figs. 5, 6, and 7 respectively. Fig. 4 is a photograph of the packaged network showing the internal construction layout and emphasizing the size of the unit. The nominal input and output impedance is 50 ohms. It has been tested in both 1/2 watt and 5 watt systems, and its electrical characteristics are very similar in either case. The maximum insertion loss of the suppressor over the 3 to 30 Mc range is 1 db, and a CW signal at 50 Mc is attenuated approximately 52 db. The input impedance reaches a maximum of 62 ohms at 8.5 Mc and 24 Mc, and a minimum of

Declassified in Part - Sanitized Copy Approved for Release 2014/04/03 : CIA-RDP78-03330A004200050004-2

Declassified in Part - Sanitized Copy Approved for Release 2014/04/03 : CIA-RDP78-03330A004200050004-2

34 ohms at 16 Mc within the pass band. The power transfer efficiency is greater than 85% over the operating range.

The unit shown in Fig. 4 is 1-3/8 x 11/16 x 5/8 inches.

To extend the frequency range of the coupler network, the impedance transformation network is being capacitively tuned (C304 in Fig. 1) rather than inductively tuned as it was originally. The fine tuning loading coil that was at first a slide type tuner has been replaced by a rotary switch type tuner that controls a multi-tapped toroidal inductor (L302 in Fig. 1). This coupler will match a 50 ohm impedance to any impedance in the previously specified load range over the 3 to 6 Mc band. Its power transfer efficiency when combined with the VHF suppressor is approximately 75% in either the 1/2 watt or 5 watt case.

The coupler module is mounted in a 1-7/8 inch cubical copper box. It has a sub-miniature coaxial connector for the rf power input, and an insulated post with a hand adjustable nut for the antenna. The controls for its adjustment protrude through the top. The center control is a concentric dual shaft switch (S1 in Fig. 1) for the coarse adjustments of the impedance transformer and the antenna loading network. The fine controls C304 and S2 surround this switch. All controls have been designed so they can be adjusted manually.

3.3 System Operational Procedure

1) Apply the power

a) +12v dc with the negative side grounded.

b) +150v dc or +135v dc at 35 mAdc with the negative side grounded.

Declassified in Part - Sanitized Copy Approved for Release 2014/04/03 : CIA-RDP78-03330A004200050004-2

Declassified in Part - Sanitized Copy Approved for Release 2014/04/03 : CIA-RDP78-03330A004200050004-2

2) Plug in a CR-19/U crystal unit of the selected frequency.

3) With the key closed, tune the rf amplifier for maximum power into a 50 ohm load.*

4) Connect the coupler to the amplifier and with the key closed, tune the coupler for maximum power output.

---

*This step is actually not necessary. It can be combined with step 4 without any noticeable effect on the output.

Declassified in Part - Sanitized Copy Approved for Release 2014/04/03 : CIA-RDP78-03330A004200050004-2

Declassified in Part - Sanitized Copy Approved for Release 2014/04/03 : CIA-RDP78-03330A004200050004-2

4. Electro-Mechanical Design & Development

The types of switching and tuning devices necessary to accomplish the design of these highly specialized modules are not available commercially. Therefore, a considerable amount of time and effort has gone into the design and development of such items as the following:

1) Tunable coil form assemblies. These assemblies are of various forms and sizes utilizing both 1/4 inch and 1/2 inch piston type ferrite slugs to obtain high Q, small size, low frequency, tunable transformers.

2) Rotating multi-position switches. For example S1 on Fig. 1 is a dual control switch built on a piece of 1/16 inch epoxy laminate approximately 1-5/8 inches square. One switch is a single pole 30 position. The other is a single pole 15 position. This entire assembly requires a volume of 1/2 cu. inch for mounting whereas the smallest 12 position single pole switch now on the market requires a similar volume. S2 on Fig. 1 is a single pole 15 position switch constructed similarly. It is approximately 3/4 inch square and requires a volume of 3/16 cu. inch for mounting. Emphasis is being placed on reliability, detent action, reproducibility, and size in the development of these switches.

3) Miniature Hand Key. The hand key pictured in the photo of Fig. 3 is the most complex developed thus far. It is a telescopic type of mechanism with retractable feet for mechanical

Declassified in Part - Sanitized Copy Approved for Release 2014/04/03 : CIA-RDP78-03330A004200050004-2

Declassified in Part - Sanitized Copy Approved for Release 2014/04/03 : CIA-RDP78-03330A004200050004-2

stability. By pulling or pushing on a small knob at the external end of the telescopic portion, the key is placed in an operating or non-operating position. Evaluation of this key has shown that it has no better "feel" than a much smaller and simpler key. It is definitely not as reliable mechanically. Consequently, future effort will be directed toward producing an extremely small, simple key that will have a good "feel", gap and spring adjustment, and a high degree of reliability.

Declassified in Part - Sanitized Copy Approved for Release 2014/04/03 : CIA-RDP78-03330A004200050004-2

Declassified in Part - Sanitized Copy Approved for Release 2014/04/03 : CIA-RDP78-03330A004200050004-2

5. MCW (A2) and Speech (A3) Modulator Development

5.1 General

For the A2 and A3 type systems a completely transistorized modulator is in the breadboard stage. For developmental purposes, the modulator design and development has been broken into two sections, namely the microphone amplifier-speech clipper and filter, and the audio power amplifier. This modulator will be capable of furnishing sufficient power for 100% modulation of either the 1/2 watt or 5 watt transmitters over the frequency range of 150 to 2500 cps.

5.2 Microphone Amplifier-Speech Clipper and Filter

A two stage transistorized transformerless low noise amplifier as shown in Fig. 8 is being used for modulator experimentation. The RCA 2N215's are small signal low noise germanium transistors. They will be replaced by an equivalent silicon type in the final design. The direct coupling feature eliminates the necessity of large value capacitors ordinarily needed for low frequency response. This feature may have to be abandoned because it makes the circuit less adaptable to AGC control.

The output of this amplifier is being clipped with a transistor clipper circuit and its output is filtered before being fed to the power amplifier. Clipping and filtering results in better voice recognizability and reduces the possibility of overmodulation. Both LC and RC types of filters are being tried, and thus far the RC types seem more practical so far as size is concerned. The inductors required for the LC type are quite large.

Declassified in Part - Sanitized Copy Approved for Release 2014/04/03 : CIA-RDP78-03330A004200050004-2

Declassified in Part - Sanitized Copy Approved for Release 2014/04/03 : CIA-RDP78-03330A004200050004-2

5.3 Audio Power Amplifier

An experimental 5 watt modulator amplifier is shown in Fig. 9. Here again germanium transistors are being used for developmental purposes because they are less expensive than their silicon equivalents. Silicon types are now available for replacement in all of these stages, and will be used in the final design.

The voltage amplifier boosts the signal from the speech clipper and filter to the necessary drive level. The driver is a class B power amplifier capable of driving the class B push-pull output stage or plate modulating a 5 watt rf amplifier presenting a load of approximately 5.5 K.

The major problem that has arisen thus far in the 5 watt plate modulator design is one of component size. A search for a 10 watt transformer such as T2 in Fig. 9 with electrical characteristics and size suitable for the application revealed that there is no such item available commercially. The Baltimore Transformer Co. volunteered to furnish a sample unit with a maximum dimension of 1-7/8 inches. It is being evaluated in the experimental modulator.

Declassified in Part - Sanitized Copy Approved for Release 2014/04/03 : CIA-RDP78-03330A004200050004-2

Declassified in Part - Sanitized Copy Approved for Release 2014/04/03 : CIA-RDP78-03330A004200050004-2

6. Components and Materials Evaluation

6.1 General

Since some of the components selected for this application are relatively new, it was proposed to evaluate a sampling of them to check their specifications and reliability. Other components and materials are being tested if there is any doubt that they might have a detrimental effect on the mechanical or electrical reliability of the final modules.

6.2 Miniature Capacitors

Table 1 of Fig. 10 is a comparison of the Capacitance and Q Qualification Test measurements of Micamold Type MQ-15 silver mica and Vitramon porcelain miniature capacitors. These measurements were made immediately after unpacking the capacitors. Reading down the "Failures" column one can see that 19 of 160 or 12% of the Micamold capacitors exceeded the specified ± 5% tolerance, whereas only 4 of 80 or 5% of the Vitramon's exceeded the specified tolerance. More distressing is the fact that several of the Micamolds deviated from their nominal value by as much as -40%. The poorest Vitramon deviated from its nominal value by -6.33%. The "Q" measurements revealed typical values for these types of capacitors.

The poor tolerance test results and examination of the Micamold capacitor structure leads us to believe that they might be susceptible to moisture absorption. It would be unwise to encapsulate such a component for obvious reasons. The exceptionally small size of this type of mica capacitor makes it very important to the project. Therefore more time is being spent on the evaluation of the El-Menco DM-15 equivalent type.

Declassified in Part - Sanitized Copy Approved for Release 2014/04/03 : CIA-RDP78-03330A004200050004-2

Declassified in Part - Sanitized Copy Approved for Release 2014/04/03 : CIA-RDP78-03330A004200050004-2

6.3 Miniature Resistors

Sample lots of Allen-Bradley types of miniature low power resistors have been temperature tested according to MIL-R-11A. The type CB which was recently placed on the commercial market is a fixed composition 1/4-watt resistor. It is 3/32 inch in diameter and 1/4 inch long. Its temperature characteristics are similar to those of the widely used 1/2 watt Allen-Bradley fixed composition resistors. In Figure 11 is tabulated the average resistance values of sample lots (6 each) of resistors ranging in nominal value from 100 ohms to 1 megohm. The measurements tabulated are those made at +25°C at the start of the test, and the negative and positive temperature extremes of the test. In every case the resistance increases as the temperature is raised or lowered. None of the units exceeded the ±5% tolerance limits at +25°C. Some of them exceeded the +5% limit at the temperature extremes, but in no case was the drift excessive enough to warrant further investigation.

Sample lots of Allen-Bradley type TR, 1/10 watt ± 5% fixed composition resistors were also tested. They exhibited characteristics very similar to those of the type CB. For comparison the test results are tabulated with the type CB in Fig. 11.

The type TR is approximately 1/16 inch in diameter by 5/32 inch in length. Its exceptionally small size makes it very difficult to handle and its color code very difficult to read. Its very low power rating limits its usefulness. For these reasons it will not be used very widely in this application.

Declassified in Part - Sanitized Copy Approved for Release 2014/04/03 : CIA-RDP78-03330A004200050004-2

Declassified in Part - Sanitized Copy Approved for Release 2014/04/03 : CIA-RDP78-03330A004200050004-2

7. Plans for the Third Bi-Monthly Period

The design and development of a resonance and antenna loading indicator will be initiated. Investigations of methods considered better than those utilizing incandescent lamps and neon lamps will be made.

RF circuit design and development will be extended into the higher frequency bands, and into the 5 watt power level.

Miniature microphone evaluation will be started, and modulator development will be continued. If time allows several of the A1 system modules will be encapsulated so encapsulation effects can be studied.

A systematic program will be set up for the electrical and mechanical evaluation of prototype modules.

50X1

Declassified in Part - Sanitized Copy Approved for Release 2014/04/03 : CIA-RDP78-03330A004200050004-2

Declassified in Part - Sanitized Copy Approved for Release 2014/04/03 : CIA-RDP78-03330A004200050004-2

200506

REVISIONS			
SYM	DESCRIPTION	DATE	APPROVAL

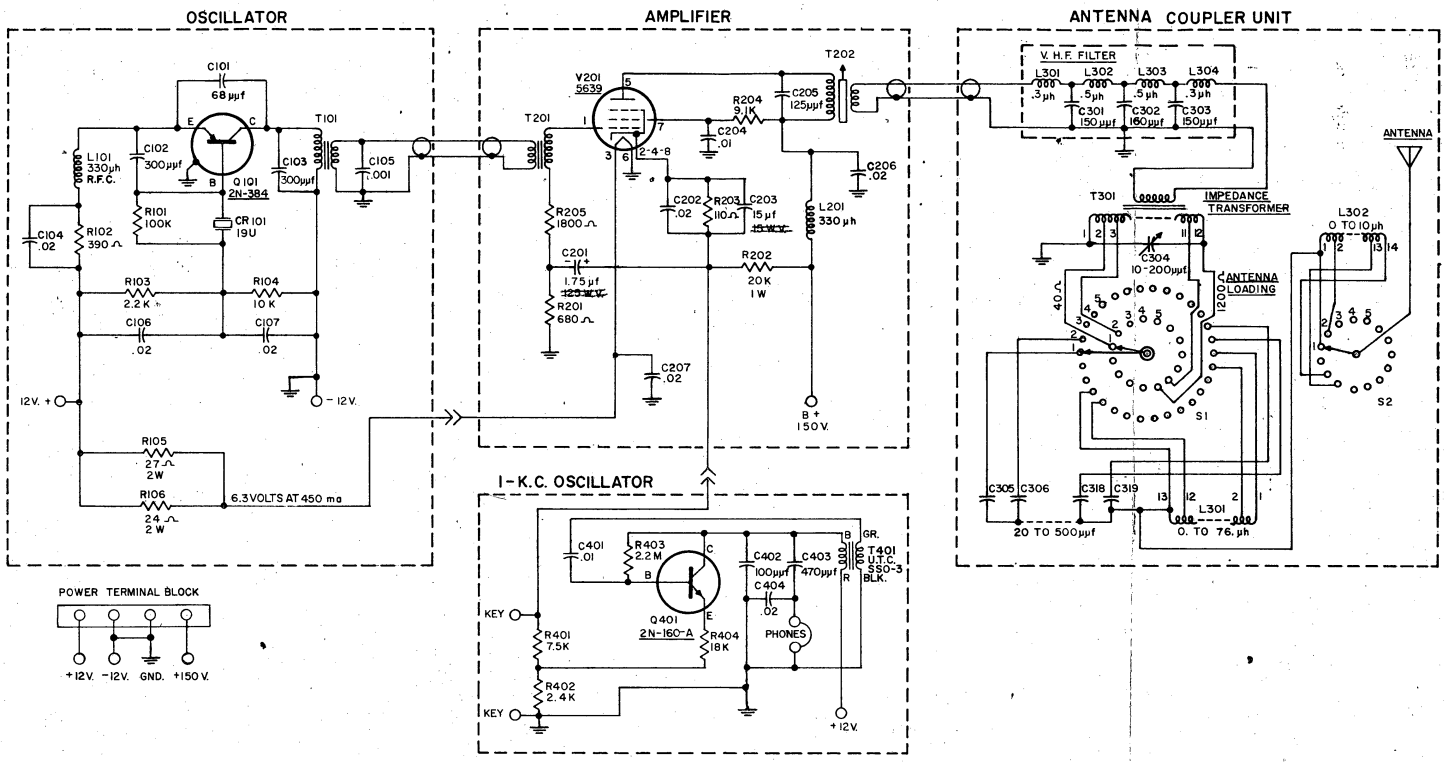

DO NOT SCALE DRAWING

MATERIAL:	UNLESS OTHERWISE SPECIFIED	SIGNATURE	DATE	FIGURE 1 EXPERIMENTAL MODEL TYPE A-1, 1/2 WATT SYSTEM SCHEMATIC & WIRING DIAGRAM
FINISH:	DIMENSIONS ARE IN INCHES. TOLERANCES ON: FRACTIONS ± 1/64, DECIMALS ± .005, ANGLES ± 0° 30' REMOVE ALL BURRS AND SHARP EDGES.	DR	11/1/57	
		CHK.		
		ENGR.		
		APPD.		
		SCALE		PROJECT 566-01

STAT
STAT

200506

109 Muth 1000H

Declassified in Part - Sanitized Copy Approved for Release 2014/04/03 : CIA-RDP78-03330A004200050004-2

Declassified in Part - Sanitized Copy Approved for Release 2014/04/03 : CIA-RDP78-03330A004200050004-2

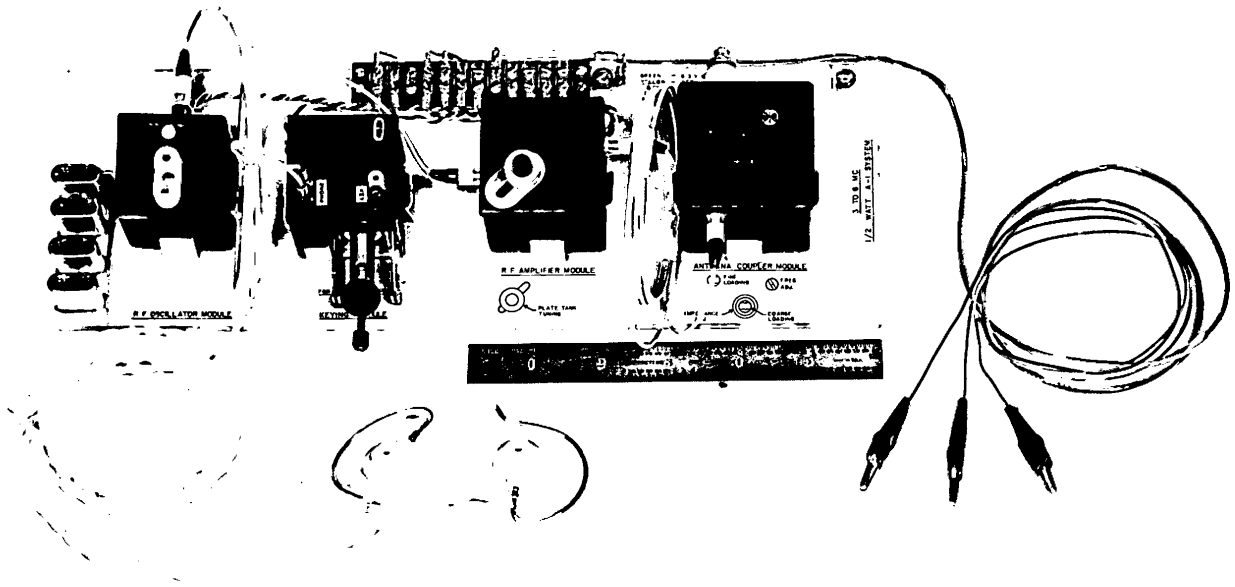

FIGURE 2
EXPERIMENTAL MODEL A—I SYSTEM (VIEW I)

Declassified in Part - Sanitized Copy Approved for Release 2014/04/03 : CIA-RDP78-03330A004200050004-2

Declassified in Part - Sanitized Copy Approved for Release 2014/04/03 : CIA-RDP78-03330A004200050004-2

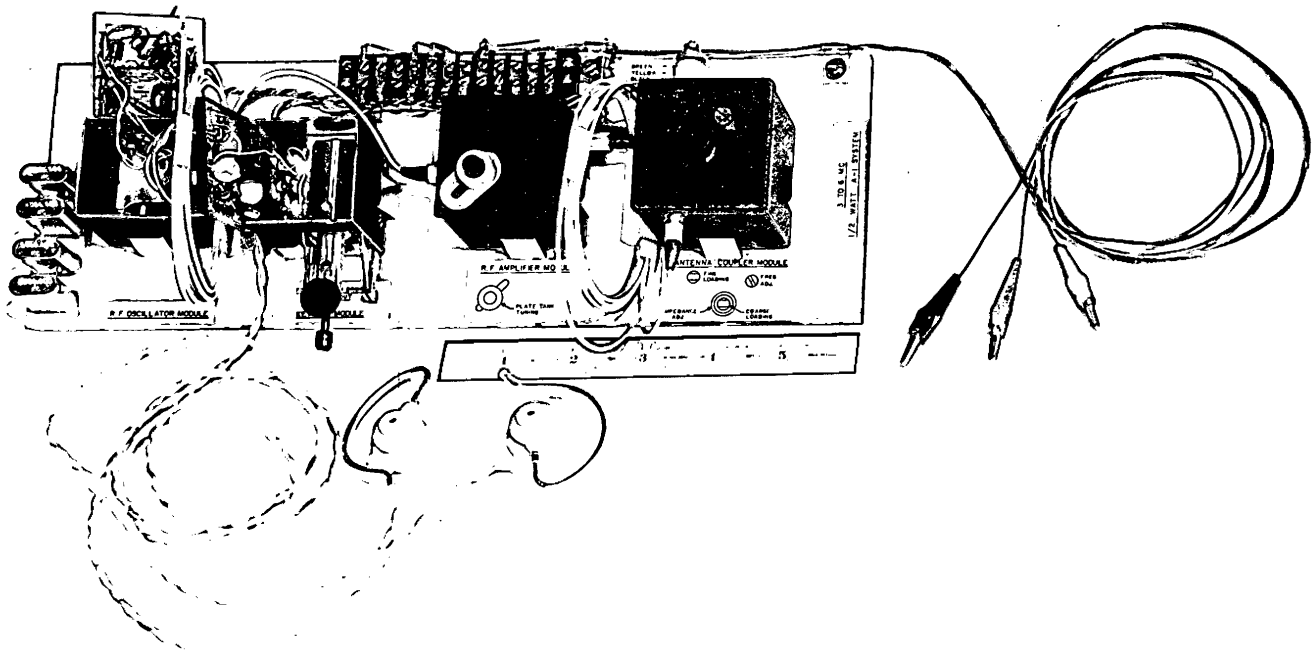

FIGURE 3
EXPERIMENTAL MODEL A-1 SYSTEM (VIEW 2)

Declassified in Part - Sanitized Copy Approved for Release 2014/04/03 : CIA-RDP78-03330A004200050004-2

Declassified in Part - Sanitized Copy Approved for Release 2014/04/03 : CIA-RDP78-03330A004200050004-2

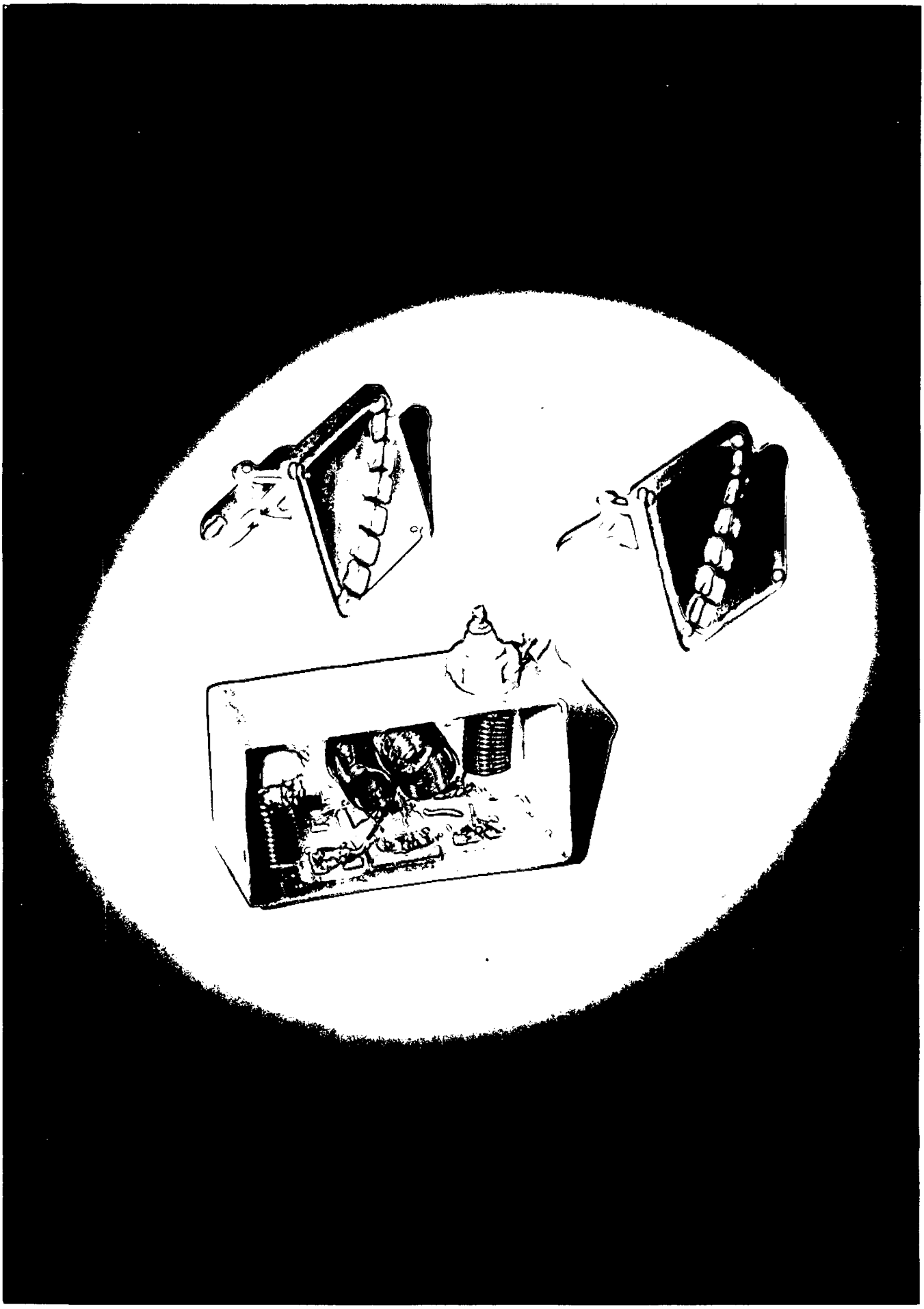

FIGURE 4 V.H.F. SUPPRESSOR

Declassified in Part - Sanitized Copy Approved for Release 2014/04/03 : CIA-RDP78-03330A004200050004-2

Declassified in Part - Sanitized Copy Approved for Release 2014/04/03 : CIA-RDP78-03330A004200050004-2

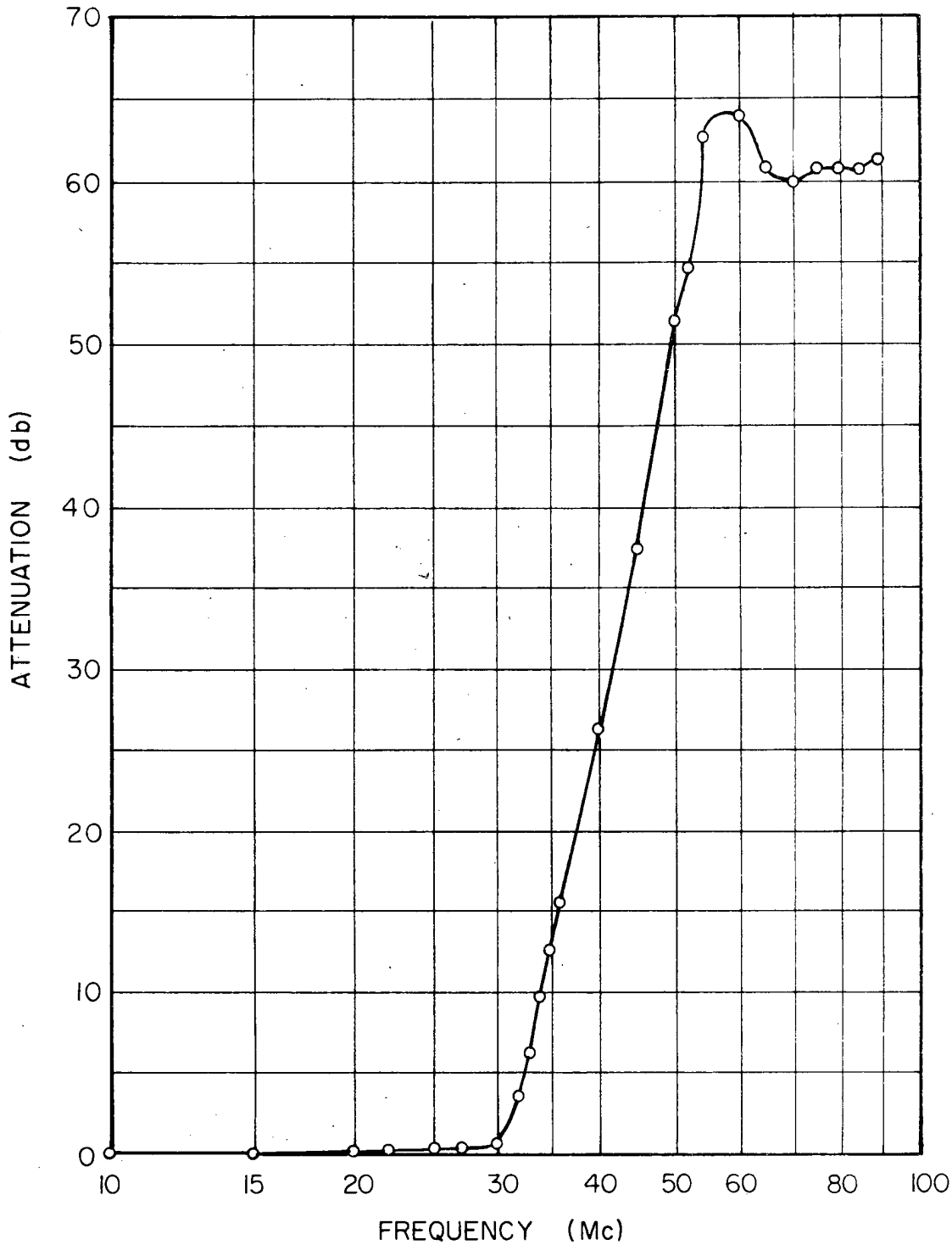

FIGURE 5
ATTENUATION VS. FREQUENCY OF VHF SUPPRESSOR

Declassified in Part - Sanitized Copy Approved for Release 2014/04/03 : CIA-RDP78-03330A004200050004-2

Declassified in Part - Sanitized Copy Approved for Release 2014/04/03 : CIA-RDP78-03330A004200050004-2

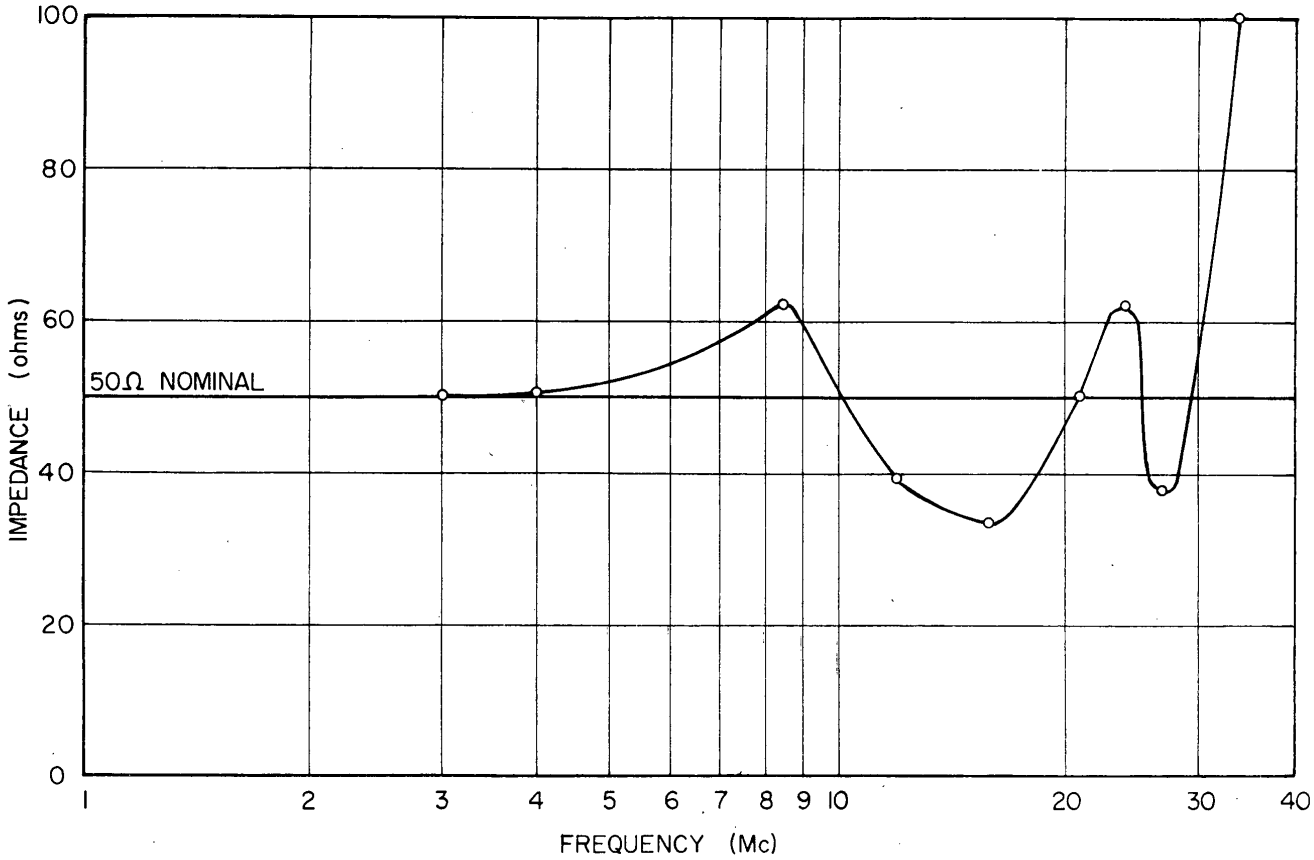

FIGURE 6
INPUT IMPEDANCE VS. FREQUENCY OF VHF SUPPRESSOR

Declassified in Part - Sanitized Copy Approved for Release 2014/04/03 : CIA-RDP78-03330A004200050004-2

Declassified in Part - Sanitized Copy Approved for Release 2014/04/03 : CIA-RDP78-03330A004200050004-2

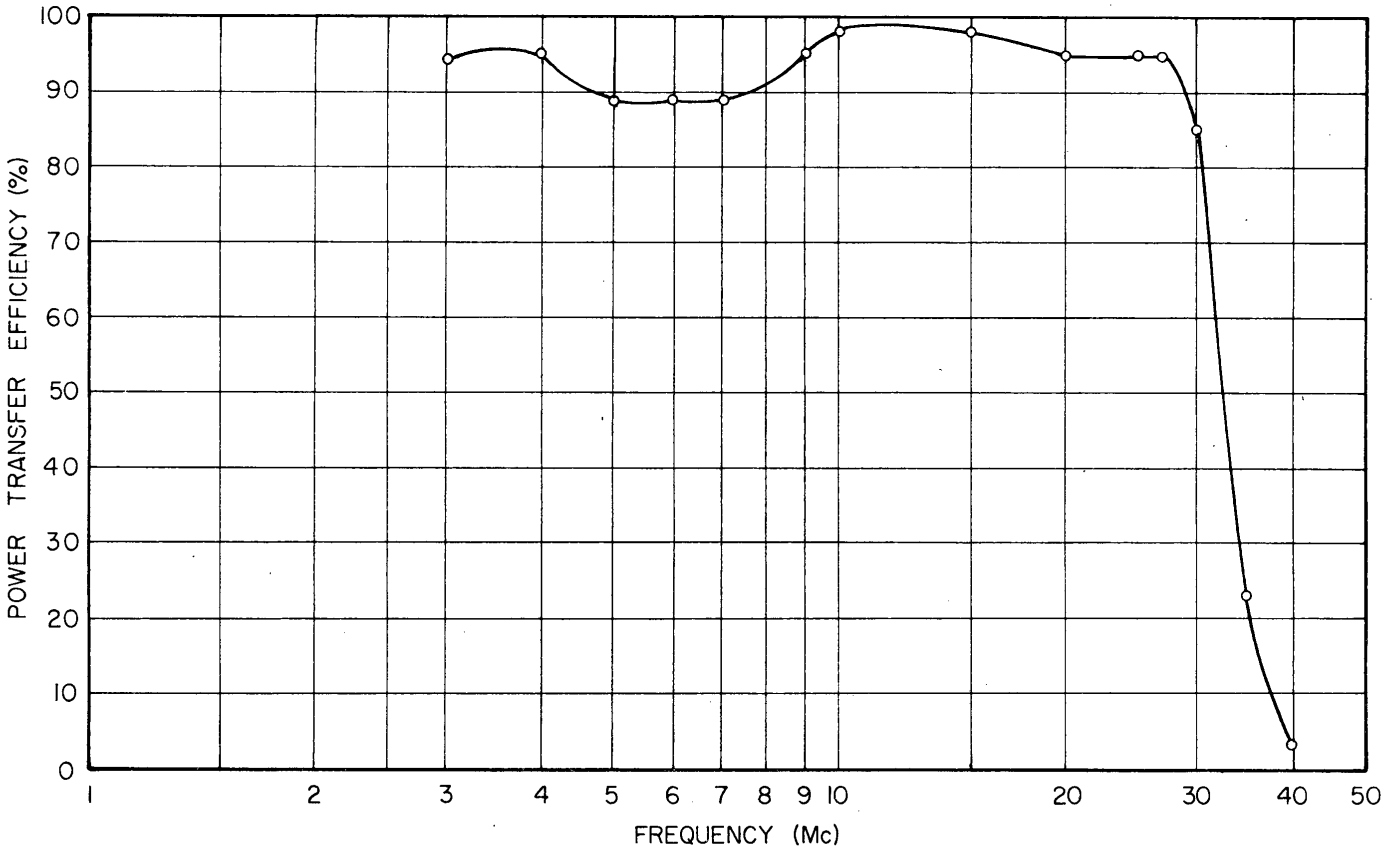

FIGURE 7

POWER TRANSFER EFFICIENCY VS. FREQUENCY OF VHF SUPPRESSOR

Declassified in Part - Sanitized Copy Approved for Release 2014/04/03 : CIA-RDP78-03330A004200050004-2

Declassified in Part - Sanitized Copy Approved for Release 2014/04/03 : CIA-RDP78-03330A004200050004-2

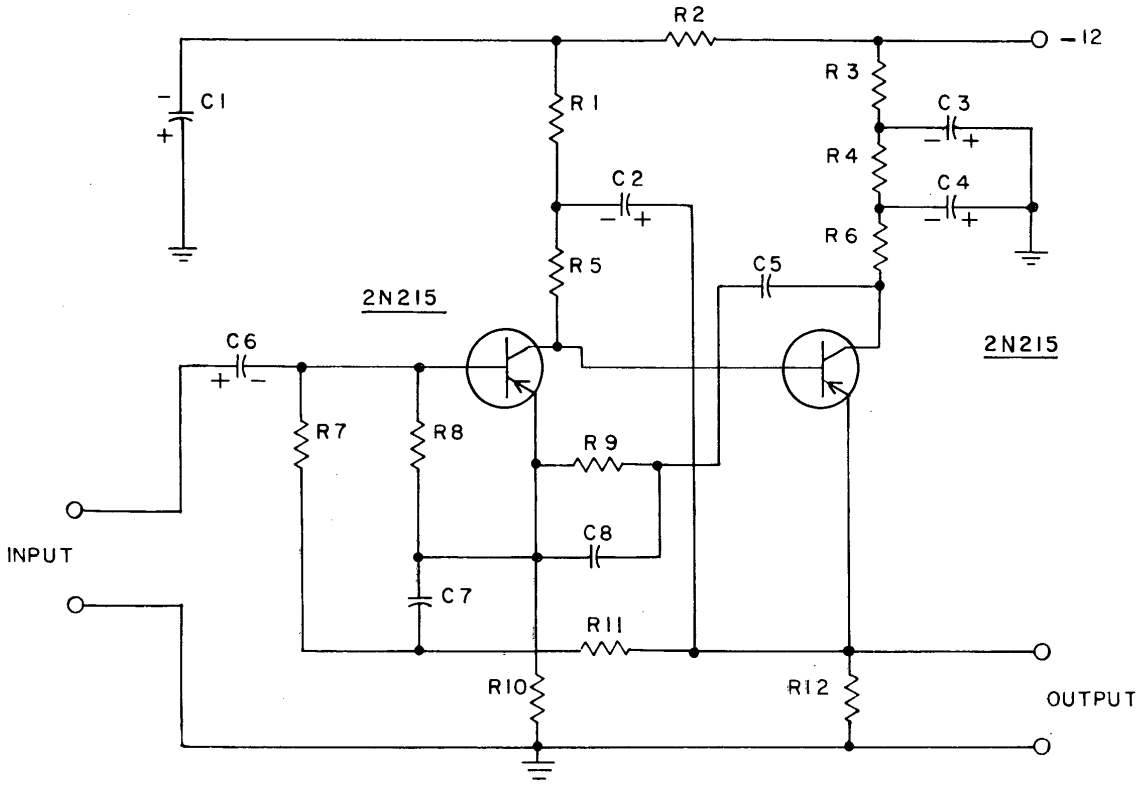

EXPERIMENTAL
LOW NOISE PRE - AMPLIFIER

FIGURE 8

Declassified in Part - Sanitized Copy Approved for Release 2014/04/03 : CIA-RDP78-03330A004200050004-2

Declassified in Part - Sanitized Copy Approved for Release 2014/04/03 : CIA-RDP78-03330A004200050004-2

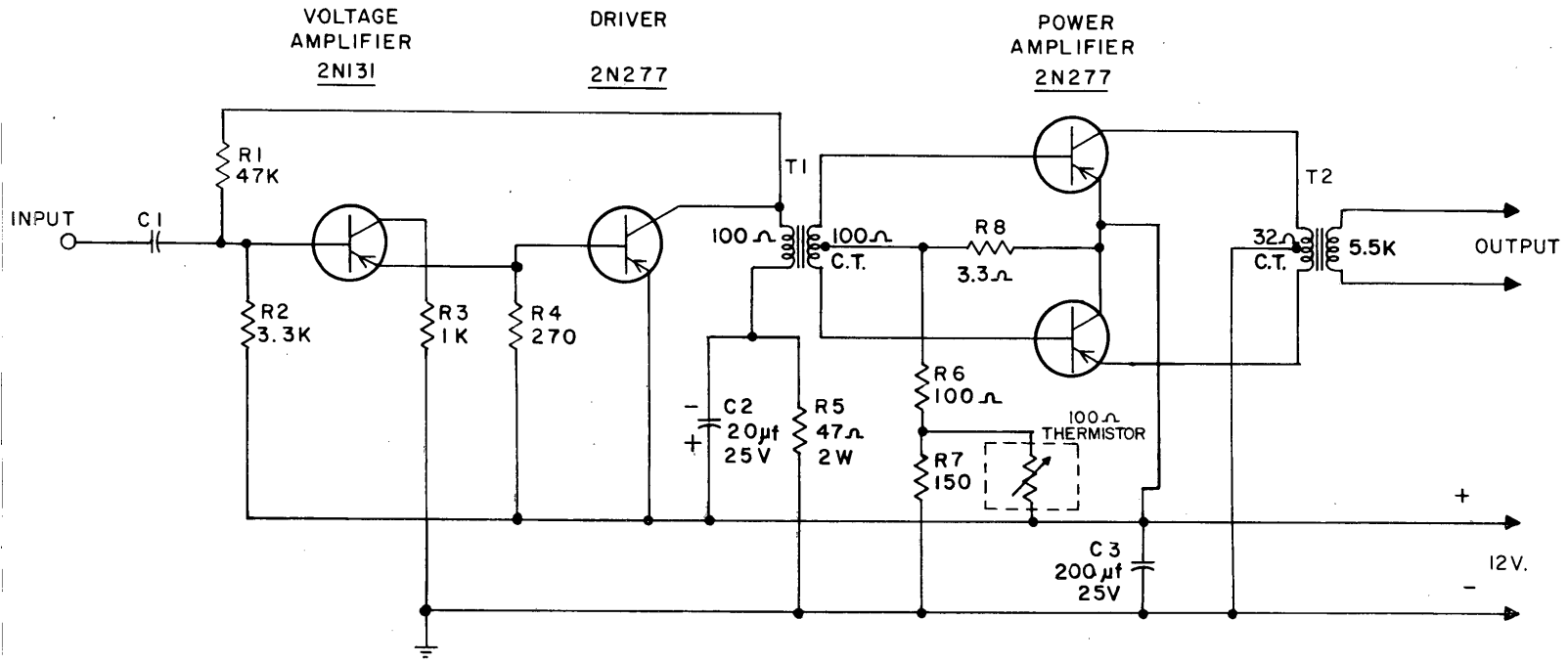

FIGURE 9

EXPERIMENTAL 5 WATT MODULATOR POWER AMPLIFIER

Declassified in Part - Sanitized Copy Approved for Release 2014/04/03 : CIA-RDP78-03330A004200050004-2

Declassified in Part - Sanitized Copy Approved for Release 2014/04/03 : CIA-RDP78-03330A004200050004-2

TABLE 1

COMPARISON OF CAPACITANCE AND Q QUALIFICATION TEST MEASUREMENTS OF MICAMOLD MQ-15 SILVER MICA AND VITRAMON PORCELAIN CAPACITORS, SPECIFIED TOL. ± 5% MEASURED AT 3 MC

MFR. MICAMOLD = MM VITRAMON = VIT	NOMINAL C = uuf	NO. OF SAMPLES TESTED	AVG. C = uuf	AVG. % DEV.	RELATIVE TO 0% MAX. + % DEV.	RELATIVE TO 0% MAX. - % DEV.	FAIL-URES	AVG. Q	MAX. Q	MIN. Q
MM	20	10	20.0	+0.2	+4.50	-2.50	0	926	1969	384
VIT	20	5	19.6	-0.8	+1.00	-4.00	0	1748	3620	455
MM	24	10	23.7	-1.1	+3.75	-5.80	1	517	638	426
VIT	24	5	22.8	-5.0	-3.75	-6.25	1	1396	2150	428
MM	30	10	25.8	-14.0	-3.00	47.00	5	736	2676	291
VIT	30	5	29.1	-2.9	+1.00	-6.33	2	947	1330	660
MM	36	10	34.0	-5.7	+3.05	-40.30	1	2526	6651	659
VIT	36	5	36.0	+0.1	+139	-1.94	0	3679	6850	686
MM	43	10	40.3	-6.3	+1.16	-43.20	1	2256	4013	577
VIT	43	5	43.1	+0.1	+163	-0.93	0	1455	2020	656
MM	50	10	47.9	-4.1	+0.20	-24.20	1	4063	9041	714
VIT	51	5	50.6	-0.8	+2.55	-4.12	0	1549	2375	656
MM	56	10	52.2	-6.7	+2.86	-26.6	2	965	2174	516
VIT	56	5	54.4	-3.5	-2.68	-4.82	0	1659	2520	1000
MM	68	10	66.0	-2.9	-132	-4.26	0	2598	13320	595
VIT	68	5	67.1	-1.3	+2.50	-3.68	0	4026	4550	2050

FIGURE 10

Declassified in Part - Sanitized Copy Approved for Release 2014/04/03 : CIA-RDP78-03330A004200050004-2

Declassified in Part - Sanitized Copy Approved for Release 2014/04/03 : CIA-RDP78-03330A004200050004-2

TABLE 1

COMPARISON OF CAPACITANCE AND Q QUALIFICATION TEST MEASUREMENTS OF MICAMOLD MQ-15 SILVER MICA AND VITRAMON PORCELAIN CAPACITORS, SPECIFIED TOL. ± 5% MEASURED AT 3 MC

MFR. MICAMOLD = MM VITRAMON = VIT	NOMINAL C = uuf	NO. OF SAMPLES TESTED	AVG. C = uuf	AVG. % DEV.	RELATIVE TO 0% MAX. + % DEV.	RELATIVE TO 0% MAX. - % DEV.	FAIL-URES	AVG. Q	MAX. Q	MIN. Q
MM	75	10	72.1	-3.9	-1.60	-5.47	2	1453	1933	1028
VIT	75	5	73.2	-2.3	-1.73	-3.07	0	7128	13900	3430
MM	82	10	74.9	-8.6	+146	-22.32	4	3600	6040	1232
VIT	82	5	80.3	-2.1	-0.12	-378	0	7526	15500	1650
MM	91	10	90.5	-0.6	+1.87	-2.53	0	2433	5653	836
VIT	91	5	93.0	+2.2	+4.18	-0.55	0	3775	5680	1785
MM	100	10	99.2	-0.8	+2.10	-4.20	0	2804	6413	952
VIT	100	5	101.0	+1.0	+3.80	-3.50	0	3092	6380	1448
MM	150	10	146.1	-2.6	+3.80	-14.53	2	3696	7075	1835
VIT	150	5	144.9	-3.4	-1.40	-5.40	1	7916	27800	2080
MM	180	10	178.9	-0.6	+450	-3.11	0	2913	3938	2235
VIT	180	5	181.6	+0.9	+1.94	-0.17	0	5477	8560	2855
MM	200	10	196.2	-1.9	+0.65	-3.75	0	6331	18135	1823
VIT	300	5	304.4	+1.5	+3.63	-3.10	0	0080	11650	3230
MM	500	10	489.8	-2.0	-016	-3.50	0	3648	7838	1254
VIT	510	5	509.5	-0.1	+4.65	-2.80	0	3852	4930	2670

* A failure is one that fell out of the ± 5% Capacitance Range.

FIGURE 10
PAGE 2 of 2

Declassified in Part - Sanitized Copy Approved for Release 2014/04/03 : CIA-RDP78-03330A004200050004-2

Declassified in Part - Sanitized Copy Approved for Release 2014/04/03 : CIA-RDP78-03330A004200050004-2

RESISTANCE TEMPERATURE CHARACTERISTICS

DESCRIPTION: ALLEN-BRADLEY, TYPE CB, 1/4 WATT ± 5%				ALLEN-BRADLEY, TYPE TR, 0.1 WATT ± 5%			
NOMINAL R = OHMS	AVG. R AT T OF 6 EA. LOTS			NOMINAL R = OHMS	AVG. R AT T OF 6 EA. LOTS		
	25°C	-55°C	+105°C		25°C	-55°C	+105°C
100	100.6	102.1	101.9	100	98.57	100.69	99.34
220	215.2	219.4	218.9	220	216.33	220.95	219.64
330	329.3	335.3	336.4	330	329.32	335.41	334.38
470	463.5	476.0	469.4	470	462.88	473.79	471.68
680	675.3	691.7	688.9	680	684.11	703.92	693.93
K OHMS				**K OHMS**			
1.000	986.1	1.015.1	1.003.2	1.000	992.37	1.028.33	1.002.22
2.200	2.132.8	2.200.4	2.197.5	2.200	2.181.1	2.239.7	2.229.3
3.300	3.287.8	3.408.7	3.396.8	3.300	3.235.6	3.345.9	3.299.0
4.700	4.649.7	4.800.8	4.832.2	4.700	4.732.6	4.942.8	4.831.1
6.800	6.772.9	6.937.3	7.127.1	6.800	6.793.8	6.984.7	7.003.9
8.200	8.169.1	8.425.4	8.516.6	8.200	8.090.6	8.341.8	8.283.9
10.000	9.964.0	10.284.	10.399.	10.000	9.852.3	10.186.5	10.111.
22.000	21.654.	22.651.	22.421.	22.000	21.891.	22.484.	22.763.
33.000	32.680.	34.167.	37.040.	33.000	32.814.	33.825.	32.380.
47.000	47.546.	49.405.	50.119.	47.000	46.942.	48.920.	48.414.
68.000	67.979.	72.226.	70.011.	68.000	68.389.	70.627.	71.163.
82.000	82.514.	86.368.	87.396.	82.000	82.833.	84.376.	87.286.
100.0	98.71	102.76	103.88	100.0	100.96	102.58	105.42
220.0	217.97	225.78	234.38	220.0	225.76	228.69	231.87
470.0	470.66	497.18	497.47	330.0	341.43	335.19	359.78
680.0	682.14	710.71	721.84	470.0	479.87	479.73	499.76
820.0	821.73	853.89	879.53	680.0	715.83	736.02	737.41
				820.0	856.76	872.99	884.05
MEG OHMS				**MEG OHMS**			
1.000.0	0.987.3	1.043.9	1.035.3	1.000.0	1.050.4	1.057.5	1.093.4

Figure 11

Declassified in Part - Sanitized Copy Approved for Release 2014/04/03 : CIA-RDP78-03330A004200050004-2