Declassified in Part - Sanitized Copy Approved for Release 2013/09/11 : CIA-RDP78-03535A000700130043-2

MAKE SURE THIS IS THE LATEST ISSUE

NAME DIAGRAM, SCHEMATIC

OR COLOR

PART NUMBER B

50X1

PART NUMBER B

ISSUE	RELEASES AND REVISIONS	MEMO
0		

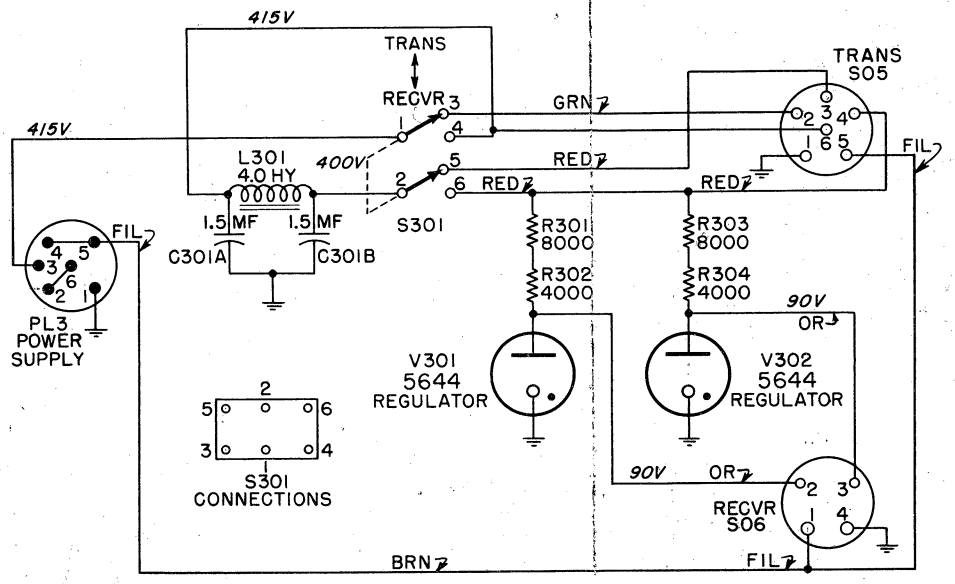

NOTE: VOLTAGE MEASUREMENTS TAKEN TO GROUND USING A 20,000 OHM/VOLT METER AND ARE DC.

50X1

Declassified in Part - Sanitized Copy Approved for Release 2013/09/11 : CIA-RDP78-03535A000700130043-2