Approved For Release 2005/02/17 : CIA-RDP78B04770A001600030001-2

File # 3
RE file # 1, 2
Box 16
Job 78B04770A

XEROX PRINTER #1 (GIMRADA)

HANDBOOK AND DRAWING NUMBER LIST

99711-3

2 SETS OF ENG. DRAWINGS RECEIVED AND SENT TO [redacted] FOR RETENTION

STAT

5 HANDBOOKS RECEIVED — 4 SENT TO [redacted] FOR RETENTION

STAT

Declass Review by NGA.
Approved For Release 2005/02/17 : CIA-RDP78B04770A001600030001-2

Approved For Release 2005/02/17 : CIA-RDP78B04770A001600030001-2

DATE 8-1-66		DL F 5600	
		CODE IDENT	SHEET OF SHEETS	REV

	SPECIFICATION	TYPE-MODEL-SERIES
GOVT		
CONTR		
CONTRACT NO.		

ITEM NOMENCLATURE:

PRINTER, CONTACT DUPLICATING & RESEAU

DWG SIZE	CODE IDENT	DOCUMENT IDENT NO.	REV	DOCUMENT NOMENCLATURE
		A2835		
		A3924		
		A5515		
		A5580		
		A5586		
		A5605		
		A5621		
		A5625		
		A5626		
		A5631		
		A5632		
		A5640		
		A5641		
		A5642		
		A5643		
		A5644		
		A5648		
		A5649		
		A5651		
		A5652		
		A5653		

Approved For Release 2005/02/17 : CIA-RDP78B04770A001600030001-2

Approved For Release 2005/02/17 : CIA-RDP78B04770A001600030001-2

DATE 8-1-66		DL F 5600	
		CODE IDENT	SHEET OF SHEETS	REV

	SPECIFICATION	TYPE-MODEL-SERIES
GOVT		
CONTR		
CONTRACT NO.		

ITEM NOMENCLATURE:

PRINTER, CONTACT DUPLICATING & RESEAU

DWG SIZE	CODE IDENT	DOCUMENT IDENT NO.	REV	DOCUMENT NOMENCLATURE
		A5661		
		A5662		
		A5663		
		A5664		
		A5677 & A5731		
		A5803		
		A5833		
		A5835		
		A5837		
		A5856 & A5908		
		A5912		
		A5915		
		A5960		
		A5973		
		A5976		
		A5977		
		A5978		
		A5980		
		A5984		

Approved For Release 2005/02/17 : CIA-RDP78B04770A001600030001-2

Approved For Release 2005/02/17 : CIA-RDP78B04770A001600030001-2

DATE 8-1-66		DL F 5600	
		CODE IDENT	SHEET OF SHEETS	REV

	SPECIFICATION	TYPE·MODEL·SERIES
GOVT		
CONTR		
CONTRACT NO.		

ITEM NOMENCLATURE:

PRINTER, CONTACT DUPLICATING & RESEAU

DWG SIZE	CODE IDENT	DOCUMENT IDENT NO.	REV	DOCUMENT NOMENCLATURE
		A5989		
		A6004		
		A6006		
		A6007		
		A6008		
		A6009		
		A6010		
		A6034		
		A6035		
		A6042		
		A6043		
		A6044		
		A6048		
		A6049		
		A6063		
		A6064		
		A6070		
		A6072		
		A6073		
		A6080		
		A6082		

Approved For Release 2005/02/17 : CIA-RDP78B04770A001600030001-2

Approved For Release 2005/02/17 : CIA-RDP78B04770A001600030001-2

DATE 8-1-66		CODE IDENT	DL F 5600 SHEET OF SHEETS REV

	SPECIFICATION	TYPE-MODEL-SERIES
GOVT		
CONTR		
CONTRACT NO.		

ITEM NOMENCLATURE:

PRINTER, CONTACT DUPLICATING & RESEAU

DWG SIZE	CODE IDENT	DOCUMENT IDENT NO.	REV	DOCUMENT NOMENCLATURE
		A6097		
		A6099		
		A6103		
		A6113		
		A6114		
		A6119		
		A6120		
		A6127		
		A6132		
		A6133		
		A6134		
		A6135		
		A6138		
		A6139		
		A6140		
		A6142		
		A6144		
		A6145		
		A6146		
		A6147		
		A6148		
		A6150		

Approved For Release 2005/02/17 : CIA-RDP78B04770A001600030001-2

Approved For Release 2005/02/17 : CIA-RDP78B04770A001600030001-2

DATE 8-1-66		CODE IDENT DL	SHEET F 5600 OF SHEETS REV

	SPECIFICATION	TYPE·MODEL·SERIES
GOVT		
CONTR		

CONTRACT NO.

ITEM NOMENCLATURE:

PRINTER, CONTACT DUPLICATING & RESEAU

DWG SIZE	CODE IDENT	DOCUMENT IDENT NO.	REV	DOCUMENT NOMENCLATURE
		A6151		
		A6163		
		A6166		
		A6170		
		A6196		
		A6197		
		A6200		
		A6205		
		A6206		
		A6209		
		A6234		
		A6261		
		A6276		
		A6277		
		A6279		
		A6286		
		A6287		
		A6296		
		A6304		
		A6317		
		A6318		

Approved For Release 2005/02/17 : CIA-RDP78B04770A001600030001-2

Approved For Release 2005/02/17 : CIA-RDP78B04770A001600030001-2

DATE 8-1-66		DL F 5600	
		CODE IDENT	SHEET OF SHEETS	REV

	SPECIFICATION	TYPE-MODEL-SERIES
GOVT		
CONTR		
CONTRACT NO.		

ITEM NOMENCLATURE:

PRINTER, CONTACT DUPLICATING & RESEAU

DWG SIZE	CODE IDENT	DOCUMENT IDENT NO.	REV	DOCUMENT NOMENCLATURE
		A6319		
		A6327		
		A6331		
		A6332		
		A6354		
		A6355		
		B5461		
		B5513		
		B5521		
		B5527		
		B5541		
		B5542		
		B5543		
		B5544		
		B5545		
		B5546		
		B5549		
		B5551		
		B5552		
		B5553		
		B5579		

Approved For Release 2005/02/17 : CIA-RDP78B04770A001600030001-2

Approved For Release 2005/02/17 : CIA-RDP78B04770A001600030001-2

DATE 8-1-66		CODE IDENT	DL F 5600 SHEET OF SHEETS REV

	SPECIFICATION	TYPE·MODEL·SERIES
GOVT		
CONTR		
CONTRACT NO.		

ITEM NOMENCLATURE:

PRINTER, CONTACT DUPLICATING & RESEAU

DWG SIZE	CODE IDENT	DOCUMENT IDENT NO.	REV	DOCUMENT NOMENCLATURE
		B5581		
		B5612		
		B5620		
		B5628		
		B5633		
		B5634		
		B5635		
		B5636		
		B5637		
		B5645		
		B5646		
		B5650		
		B5654		
		B5655		
		B5656		
		B5657		
		B5658		
		B5665		
		B5698		
		B5699		
		B5700		

Approved For Release 2005/02/17 : CIA-RDP78B04770A001600030001-2

Approved For Release 2005/02/17 : CIA-RDP78B04770A001600030001-2

DATE 8-1-66		CODE IDENT	DL F 5600 SHEET OF SHEETS	REV

	SPECIFICATION	TYPE-MODEL-SERIES
GOVT		
CONTR		
CONTRACT NO.		

ITEM NOMENCLATURE:

PRINTER, CONTACT DUPLICATING & RESEAU

DWG SIZE	CODE IDENT	DOCUMENT IDENT NO.	REV	DOCUMENT NOMENCLATURE
		B5707		
		B5722		
		B5725		
		B5726		
		B5734		
		B5737		
		B5740		
		B5741		
		B5756		
		B5758		
		B5759		
		B5761		
		B5765		
		B5766		
		B5768		
		B5769		
		B5770		
		B5776		
		B5788		
		B5794		
		B5799		

Approved For Release 2005/02/17 : CIA-RDP78B04770A001600030001-2

Approved For Release 2005/02/17 : CIA-RDP78B04770A001600030001-2

DATE 8-1-66		DL F 5600	
		CODE IDENT	SHEET OF SHEETS	REV

	SPECIFICATION	TYPE-MODEL-SERIES
GOVT		
CONTR		
CONTRACT NO.		

ITEM NOMENCLATURE:

PRINTER, CONTACT DUPLICATING & RESEAU

DWG SIZE	CODE IDENT	DOCUMENT IDENT NO.	REV	DOCUMENT NOMENCLATURE
		B5804		
		B5805		
		B5806		
		B5810		
		B5811		
		B5812		
		B5814		
		B5815		
		B5816		
		B5817		
		B5818		
		B5821		
		B5834		
		B5836		
		B5840		
		B5841		
		B5842		
		B5843		
		B5857		
		B5866		
		B5867		

Approved For Release 2005/02/17 : CIA-RDP78B04770A001600030001-2

Approved For Release 2005/02/17 : CIA-RDP78B04770A001600030001-2

DATE 8-1-66		DL F 5600	
		CODE IDENT	SHEET OF SHEETS	REV

	SPECIFICATION	TYPE-MODEL-SERIES
GOVT		
CONTR		

CONTRACT NO.

ITEM NOMENCLATURE:

PRINTER, CONTACT DUPLICATING & RESEAU

DWG SIZE	CODE IDENT	DOCUMENT IDENT NO.	REV	DOCUMENT NOMENCLATURE
		B5870		
		B5871		
		B5873		
		B5874		
		B5878		
		B5879		
		B5880		
		B5881		
		B5893		
		B5894		
		B5898		
		B5905		
		B5913		
		B5914		
		B5918		
		B5919		
		B5920		
		B5921		
		B5922		
		B5923		
		B5924		

Approved For Release 2005/02/17 : CIA-RDP78B04770A001600030001-2

Approved For Release 2005/02/17 : CIA-RDP78B04770A001600030001-2

DATE 8-1-66		DL F 5600	
		CODE IDENT	SHEET OF SHEETS	REV

	SPECIFICATION	TYPE·MODEL·SERIES
GOVT		
CONTR		
CONTRACT NO.		

ITEM NOMENCLATURE:

PRINTER, CONTACT DUPLICATING & RESEAU

DWG SIZE	CODE IDENT	DOCUMENT IDENT NO.	REV	DOCUMENT NOMENCLATURE
		B5925		
		B5926		
		B5927		
		B5928		
		B5929		
		B5930		
		B5931		
		B5932		
		B5933		
		B5936		
		B5941		
		B5949		
		B5950		
		B5952		
		B5955		
		B5956		
		B5959		
		B5962		
		B5963		
		B5966		
		B5967		

Approved For Release 2005/02/17 : CIA-RDP78B04770A001600030001-2

Approved For Release 2005/02/17 : CIA-RDP78B04770A001600030001-2

DATE 8-1-66		CODE IDENT	DL F 5600 SHEET OF SHEETS REV

	SPECIFICATION	TYPE-MODEL-SERIES
GOVT		
CONTR		
CONTRACT NO.		

ITEM NOMENCLATURE:

PRINTER, CONTACT DUPLICATING & RESEAU

DWG SIZE	CODE IDENT	DOCUMENT IDENT NO.	REV	DOCUMENT NOMENCLATURE
		B5968		
		B5970		
		B5972		
		B5974		
		B5975		
		B5987		
		B5988		
		B5990		
		B5991		
		B6002		
		B6005		
		B6011		
		B6012		
		B6013		
		B6015		
		B6017		
		B6018		
		B6019		
		B6020		
		B6021		
		B6025		
		B6027		

Approved For Release 2005/02/17 : CIA-RDP78B04770A001600030001-2

Approved For Release 2005/02/17 : CIA-RDP78B04770A001600030001-2

DATE 8-1-66		DL F 5600	
		CODE IDENT	SHEET OF SHEETS	REV

	SPECIFICATION	TYPE·MODEL·SERIES
GOVT		
CONTR		
CONTRACT NO.		

ITEM NOMENCLATURE:

PRINTER, CONTACT DUPLICATING & RESEAU

DWG SIZE	CODE IDENT	DOCUMENT IDENT NO.	REV	DOCUMENT NOMENCLATURE
		B6029		
		B6032		
		B6045		
		B6046		
		B6047		
		B6052		
		B6053		
		B6065		
		B6066		
		B6069		
		B6071		
		B6074		
		B6083		
		B6091		
		B6092		
		B6096		
		B6098		
		B6100		
		B6101		
		B6102		
		B6104		
		B6106		

Approved For Release 2005/02/17 : CIA-RDP78B04770A001600030001-2

Approved For Release 2005/02/17 : CIA-RDP78B04770A001600030001-2

DATE 8-1-66

CODE IDENT: DL

SHEET F 5600 OF SHEETS

REV

	SPECIFICATION	TYPE-MODEL-SERIES
GOVT		
CONTR		

CONTRACT NO.

ITEM NOMENCLATURE:

PRINTER, CONTACT DUPLICATING & RESEAU

DWG SIZE	CODE IDENT	DOCUMENT IDENT NO.	REV	DOCUMENT NOMENCLATURE
		B6107		
		B6108		
		B6109		
		B6122		
		B6129		
		B6143		
		B6149		
		B6152		
		B6153		
		B6154		
		B6155		
		B6156		
		B6158		
		B6160		
		B6161		
		B6164		
		B6165		
		B6168		
		B6169		
		B6204		
		B6207		
		B6208		

Approved For Release 2005/02/17 : CIA-RDP78B04770A001600030001-2

Approved For Release 2005/02/17 : CIA-RDP78B04770A001600030001-2

DATE 8-1-66		CODE IDENT	DL F 5600 SHEET OF SHEETS	REV

	SPECIFICATION	TYPE-MODEL-SERIES
GOVT		
CONTR		
CONTRACT NO.		

ITEM NOMENCLATURE:

PRINTER, CONTACT DUPLICATING & RESEAU

DWG SIZE	CODE IDENT	DOCUMENT IDENT NO.	REV	DOCUMENT NOMENCLATURE
		B6215		
		B6228		
		B6232		
		B6233		
		B6235		
		B6236		
		B6237		
		B6244		
		B6247		
		B6260		
		B6263		
		B6285		
		B6289		
		B6291		
		B6295		
		B6297		
		B6298		
		B6300		
		B6302		
		B6303		
		B6305		
		B6306		

Approved For Release 2005/02/17 : CIA-RDP78B04770A001600030001-2

Approved For Release 2005/02/17 : CIA-RDP78B04770A001600030001-2

DL F 5600

DATE 8-1-66

CODE IDENT | SHEET OF SHEETS | REV

	SPECIFICATION	TYPE-MODEL-SERIES
GOVT		
CONTD		

CONTRACT NO.

ITEM NOMENCLATURE :

PRINTER, CONTACT DUPLICATING & RESEAU

SYS SIZE	CODE IDENT	DOCUMENT IDENT NO.	REV	DOCUMENT NOMENCLATURE
	–	B6307		
		B6311		
		B6312		
		B6321		
		B6323		
		B6369		
		B6373		
		B6395		
		D5539		
		D5540		
		D5548		
		D5554		
		D5568		
		D5574		
		D5584		
		D5585		
		D5589		
		D5590		
		D5591		
		D5593		
		D5595		

Approved For Release 2005/02/17 : CIA-RDP78B04770A001600030001-2

Approved For Release 2005/02/17 : CIA-RDP78B04770A001600030001-2

DATE 8-1-66		DL F 5600	
		CODE IDENT	SHEET OF SHEETS	REV

	SPECIFICATION	TYPE·MODEL·SERIES
GOVT		
CONTR		
CONTRACT NO.		

ITEM NOMENCLATURE:

PRINTER, CONTACT DUPLICATING & RESEAU

DWG SIZE	CODE IDENT	DOCUMENT IDENT NO.	REV	DOCUMENT NOMENCLATURE
		D5596		
		D5597		
		D5598		
		D5599		
		D5601		
		D5602		
		D5603		
		D5613		
		D5617		
		D5618		
		D5623		
		D5624		
		D5659		
		D5679		
		D5697		
		D5701		
		D5706		
		D5712		
		D5715		
		D5719		
		D5720		
		D5724		

Approved For Release 2005/02/17 : CIA-RDP78B04770A001600030001-2

Approved For Release 2005/02/17 : CIA-RDP78B04770A001600030001-2

DATE 8-1-66

DL F 5600

CODE IDENT | SHEET OF SHEETS | REV

	SPECIFICATION	TYPE·MODEL·SERIES
GOVT		
CONTR		

CONTRACT NO.

ITEM NOMENCLATURE:

PRINTER, CONTACT DUPLICATING & RESEAU

DWG SIZE	CODE IDENT	DOCUMENT IDENT NO.	REV	DOCUMENT NOMENCLATURE
		D5727		
		D5730		
		D5748		
		D5754		
		D5755		
		D5772		
		D5773-1		
		D5773-2		
		D5774		
		D5775		
		D5777		
		D5779		
		D5781-1		
		D5781-2		
		D5787		
		D5797		
		D5801		
		D5807		
		D5808		
		D5809		
		D5824		
		D5838		

Approved For Release 2005/02/17 : CIA-RDP78B04770A001600030001-2

Approved For Release 2005/02/17 : CIA-RDP78B04770A001600030001-2

DATE 8-1-66		DL F 5600	
		CODE IDENT	SHEET OF SHEETS	REV

	SPECIFICATION	TYPE·MODEL·SERIES
GOVT		
CONTR		
CONTRACT NO.		

ITEM NOMENCLATURE:

PRINTER, CONTACT DUPLICATING & RESEAU

DWG SIZE	CODE IDENT	DOCUMENT IDENT NO.	REV	DOCUMENT NOMENCLATURE
		D5839		
		D5844		
		D5847		
		D5848		
		D5849		
		D5851		
		D5852		
		D5853		
		D5855		
		D5860		
		D5861-1		
		D5861-2		
		D5862-1		
		D5862-2		
		D5864		
		D5872		
		D5882		
		D5883		
		D5884		
		D5885		
		D5887		
		D5888		

Approved For Release 2005/02/17 : CIA-RDP78B04770A001600030001-2

Approved For Release 2005/02/17 : CIA-RDP78B04770A001600030001-2

DATE 8-1-66		DL F 5600	
		CODE IDENT	SHEET OF SHEETS	REV

	SPECIFICATION	TYPE-MODEL-SERIES
GOVT		
CONTR		
CONTRACT NO.		

ITEM NOMENCLATURE:

PRINTER, CONTACT DUPLICATING & RESEAU

DWG SIZE	CODE IDENT	DOCUMENT IDENT NO.	REV	DOCUMENT NOMENCLATURE
		D5889		
		D5890		
		D5891		
		D5893		
		D5896		
		D5897		
		D5899		
		D5901		
		D5904		
		D5905		
		D5906		
		D5907		
		D5916		
		D5917		
		D5940		
		D5942		
		D5947		
		D5954		
		D5971		
		D5979		
		D5981		
		D5982		

Approved For Release 2005/02/17 : CIA-RDP78B04770A001600030001-2

Approved For Release 2005/02/17 : CIA-RDP78B04770A001600030001-2

DATE 8-1-66		DL F 5600	
		CODE IDENT	SHEET OF SHEETS	REV

	SPECIFICATION	TYPE·MODEL·SERIES
GOVT		
CONTR		

CONTRACT NO:

ITEM NOMENCLATURE:

PRINTER, CONTACT DUPLICATING & RESEAU

DWG SIZE	CODE IDENT	DOCUMENT IDENT NO.	REV	DOCUMENT NOMENCLATURE
		D5985		
		D5986		
		D5996		
		D6014		
		D6023		
		D6024		
		D6028		
		D6030		
		D6033-1		
		D6033-2		
		D6033-3		
		D6051		
		D6054		
		D6055		
		D6056		
		D6057		
		D6058		
		D6079		
		D6094		
		D6105		
		D6117		
		D6118		

Approved For Release 2005/02/17 : CIA-RDP78B04770A001600030001-2

Approved For Release 2005/02/17 : CIA-RDP78B04770A001600030001-2

DATE 8-1-66		DL F 5600	
		CODE IDENT	SHEET OF SHEETS	REV

	SPECIFICATION	TYPE·MODEL·SERIES
GOVT		
CONTR		
CONTRACT NO.		

ITEM NOMENCLATURE:

PRINTER, CONTACT DUPLICATING & RESEAU

DWG SIZE	CODE IDENT	DOCUMENT IDENT NO.	REV	DOCUMENT NOMENCLATURE
		D6124		
		D6125		
		D6126		
		D6131		
		D6141		
		D6157		
		D6162		
		D6167		
		D6177		
		D6249		
		D6255		
		D6258		
		D6275		
		D6290		
		D6292		
		D6293		
		D6294		
		D6299		
		D6301		
		D6356		
		D6357		
		D6358		

Approved For Release 2005/02/17 : CIA-RDP78B04770A001600030001-2

Approved For Release 2005/02/17 : CIA-RDP78B04770A001600030001-2

DATE 8-1-66		DL F 5600	
		CODE IDENT	SHEET OF SHEETS	REV

	SPECIFICATION	TYPE-MODEL-SERIES
GOVT		
CONTR		

CONTRACT NO.

ITEM NOMENCLATURE:

PRINTER, CONTACT DUPLICATING & RESEAU

DWG SIZE	CODE IDENT	DOCUMENT IDENT NO.	REV	DOCUMENT NOMENCLATURE
		D6359		
		D6360		
		D6361		
		D6368		
		D6399-1		
		D6399-2		
		D6399-3		
		D6399-4		
		F5537		
		F5582-1		
		F5582-2		
		F5582-3		
		F5582-4		
		F5582-5		
		F5582-6		
		F5582-7		
		F5583-1		
		F5583-2		
		F5588-1		
		F5588-2		
		F5592-1		
		F5592-2		

Approved For Release 2005/02/17 : CIA-RDP78B04770A001600030001-2

Approved For Release 2005/02/17 : CIA-RDP78B04770A001600030001-2

DATE 8-1-66

	SPECIFICATION	TYPE·MODEL·SERIES
GOVT		
CONTR		

CONTRACT NO.

DL F 5600

CODE IDENT | SHEET OF SHEETS | REV

ITEM NOMENCLATURE:

PRINTER, CONTACT DUPLICATING & RESEAU

DWG SIZE	CODE IDENT	DOCUMENT IDENT NO.	REV	DOCUMENT NOMENCLATURE
		F5594		
		F5596		
		F5600-1		
		F5600-7		
		F5611-1		
		F5611-2		
		F5614		
		F5615		
		F5616		
		F5647		
		F5667		
		F5668		
		F5669		
		F5693-1		
		F5693-2		
		F5693-3		
		F5693-4		
		F5693-5		
		F5693-6		
		F5702		
		F5703		
		F5704-1		

Approved For Release 2005/02/17 : CIA-RDP78B04770A001600030001-2

Approved For Release 2005/02/17 : CIA-RDP78B04770A001600030001-2

DATE 8-1-66		DL F 5600	
		CODE IDENT	SHEET OF SHEETS	REV

	SPECIFICATION	TYPE·MODEL·SERIES
GOVT		
CONTR		

CONTRACT NO.

ITEM NOMENCLATURE:

PRINTER, CONTACT DUPLICATING & RESEAU

DWG SIZE	CODE IDENT	DOCUMENT IDENT NO.	REV	DOCUMENT NOMENCLATURE
		F5704-2		
		F5705		
		F5723		
		F5729-1		
		F5729-2		
		F5729-3		
		F5729-4		
		F5733		
		F5736-1		
		F5736-2		
		F5738-1		
		F5738-2		
		F5739		
		F5767-1		
		F5767-2		
		F5771		
		F5784-1		
		F5784-2		
		F5784-3		
		F5789		
		F5798		
		F5802		

Approved For Release 2005/02/17 : CIA-RDP78B04770A001600030001-2

Approved For Release 2005/02/17 : CIA-RDP78B04770A001600030001-2

DATE 8-1-66		DL F 5600	
		CODE IDENT	SHEET OF SHEETS	REV

	SPECIFICATION	TYPE·MODEL·SERIES
GOVT		
CONTR		

CONTRACT NO.

ITEM NOMENCLATURE:

PRINTER, CONTACT DUPLICATING & RESEAU

DWG SIZE	CODE IDENT	DOCUMENT IDENT NO.	REV	DOCUMENT NOMENCLATURE
		F5832		
		F5846		
		F5850		
		F5858-1		
		F5858-2		
		F5858-3		
		F5863		
		F5869		
		F5875-1		
		F5875-2		
		F5875-3		
		F5876		
		F5877		
		F5886		
		F5895		
		F5902		
		F5903		
		F5935		
		F5983		
		F5992		
		F5999		
		F6001		

Approved For Release 2005/02/17 : CIA-RDP78B04770A001600030001-2

Approved For Release 2005/02/17 : CIA-RDP78B04770A001600030001-2

DATE 8-1-66		DL F 5600	
		CODE IDENT	SHEET OF SHEETS	REV

	SPECIFICATION	TYPE·MODEL·SERIES
GOVT		
CONTR		

CONTRACT NO.

ITEM NOMENCLATURE:

PRINTER, CONTACT DUPLICATING & RESEAU

DWG SIZE	CODE IDENT	DOCUMENT IDENT NO.	REV	DOCUMENT NOMENCLATURE
		F6003-1		
		F6003-2		
		F6016		
		F6026		
		F6036		
		F6037		
		F6038-1		
		F6038-2		
		F6039		
		F6040		
		F6050		
		F6059-1		
		F6059-2		
		F6060		
		F6061		
		F6062		
		F6095		
		F6110		
		F6159		
		F6172		
		F6173		
		F6181-1		

Approved For Release 2005/02/17 : CIA-RDP78B04770A001600030001-2

Approved For Release 2005/02/17 : CIA-RDP78B04770A001600030001-2

DATE 8-1-66

DL F 5600

CODE IDENT | SHEET OF SHEETS | REV

	SPECIFICATION	TYPE-MODEL-SERIES
GOVT		
CONTR		

CONTRACT NO.

ITEM NOMENCLATURE:

PRINTER, CONTACT DUPLICATING & RESEAU

DWG SIZE	CODE IDENT	DOCUMENT IDENT NO.	REV	DOCUMENT NOMENCLATURE
		F6181-2		
		F6256-1		
		F6256-2		
		F6314		
		F6365-1		
		F6365-2		
		F6366-1		
		F6366-2		
		F6366-3		

Approved For Release 2005/02/17 : CIA-RDP78B04770A001600030001-2

Approved For Release 2005/02/17 : CIA-RDP78B04770A001600030001-2

HANDBOOK
CONTACT DUPLICATING AND RESEAU PRINTER
P/N F5600
AUXILIARY PUNCHING STATION
P/N F5992

Approved For Release 2005/02/17 : CIA-RDP78B04770A001600030001-2

Approved For Release 2005/02/17 : CIA-RDP78B04770A001600030001-2

Handbook
Operation and Service Instructions
with Parts Breakdown

PRINTER, CONTACT DUPLICATING AND RESEAU
Part No. F 5600

And

Auxiliary Punching Station
Part No. F 5992

STAT

(Patents Pending)

1 June 1966

Approved For Release 2005/02/17 : CIA-RDP78B04770A001600030001-2

Approved For Release 2005/02/17 : CIA-RDP78B04770A001600030001-2

TABLE OF CONTENTS

Section		Page
I	INTRODUCTION AND DESCRIPTION	1-1
1-1.	Introduction	1-1
1-3.	Description	1-1
1-4.	Contact Duplicating and Reseau Printer	1-1
1-6.	Film Input	1-1
1-7.	Printing Format	1-5
1-8.	Film Transport	1-5
1-9.	Film Contact	1-5
1-10.	Exposure Light	1-5
1-11.	Exposure Control	1-5
1-12.	Printing Speed	1-5
1-13.	Resolution	1-5
1-14.	Service Conditions	1-5
1-15.	Electrical Requirements	1-5
1-16.	Reseau	1-5
1-17.	Punching Station Assembly	1-5
1-18.	Leading Particulars	1-6
II	SPECIAL SERVICE TOOLS	2-1
2-1.	Special Service Tools	2-1
III	PREPARATION FOR USE	3-1
3-1.	Preparation For Use	3-1
3-2.	Installation of Printer	3-1
3-4.	Installation of Punching Station Assembly	3-1
IV	OPERATING INSTRUCTIONS	4-1
4-1.	Purpose and Use of Printer Operating and Programming Controls	4-1
4-3.	Main Power "ON" Button	4-1
4-4.	Main Power "OFF" Button	4-1
4-5.	Ready Indicator	4-1
4-6.	Low Raw Stock Indicator	4-1
4-7.	Panel Test Button	4-1
4-8.	Low Original Film Indicator	4-1
4-9.	Index Error Indicator	4-1
4-10.	Platen Latch Indicator	4-1
4-11.	Lamp Failure Indicator	4-1
4-12.	Temperature Indicator	4-1
4-13.	Pressure Switch Failure Indicator	4-1
4-14.	Exposure Timer	4-1
4-15.	Exposure Factor Control	4-1
4-16.	Dodging "ON" Button	4-1
4-17.	Dodging "OFF" Button	4-1
4-18.	Viewing Speed Control	4-1
4-19.	Panel Intensity Control	4-1
4-20.	Raw Stock Advance	4-5
4-21.	Advance Increment Control	4-5
4-22.	Auto Button	4-5
4-23.	Auto Start Button	4-5
4-24.	Auto Stop Button	4-5
4-25.	Manual Button	4-5
4-26.	Reseau Print Button	4-5
4-27.	Single Cycle Button	4-5
4-28.	Prints Per Frame Control	4-5
4-29.	Film Emulsion Up Or Emulsion Down Button	4-5
4-30.	Frame Advance Controls	4-6
4-30-1.	Frame Advance Toggle Switch	4-6
4-30-2.	Frame Advance Push Button	4-6
4-31.	Frame Boundary Density Selector Switch	4-6
4-32.	Reference Mode Selector Switch	4-6
4-33.	Reference Density Control	4-6
4-34.	Frame Length Timer Control	4-6
4-35.	Boundary Timer Control	4-6
4-35-1.	Skipped Frame Reset Button	4-6
4-36.	Vacuum Chuck Switch	4-6
4-37.	Reseau Clamp Switch	4-6
4-38.	Locating Pins Switch	4-6
4-39.	Reseau Pin Setup Switches	4-6
4-40.	Film Transport Switch	4-6
4-41.	Lead Roller Switch	4-6
4-42.	Viewing Light Switch	4-8
4-43.	Lamp Test Button	4-8
4-44.	"GO" Indicator	4-8
4-45.	"NO GO" Indicator	4-8
4-46.	Lamp Programming Vertical Scale	4-8
4-47.	Lamp Programming Horizontal Scale	4-8
4-48.	Lamp Switches	4-8
4-49.	Vertical Mask Guide	4-8
4-50.	Alarm Reset	4-8
4-51.	Horizontal Mask Guide	4-8
4-52.	Purpose and Use of Punching Station Operating Controls	4-8
4-54.	Lead Roll Position Control	4-8
4-55.	Main Power Switch	4-8
4-56.	Table Vacuum Switch	4-8

Approved For Release 2005/02/17 : CIA-RDP78B04770A001600030001-2

Approved For Release 2005/02/17 : CIA-RDP78B04770A001600030001-2

TABLE OF CONTENTS (CONT.)

Section		Page
4-57.	Macroscope Focus Knob	4-8
4-58.	Transverse Aligning Knob	4-8
4-59.	Longitudinal Aligning Knob	4-8
4-60.	Skew Aligning Knob	4-12
4-61.	Round Punch Switch	4-12
4-61-1.	Slotted Punch Switch	4-12
4-62.	Operation of Punching Station Assembly	4-12
4-63.	Punching Station Film Loading	4-12
4-65.	Film Fiducial Alignment	4-12
4-67.	Film Punching	4-12
4-69.	Punching Station Film Removal	4-16
4-71.	Operation of Printer	4-16
4-72.	Printer Film Loading	4-16
4-73.	Raw Stock	4-16
4-74.	Original Film	4-16
4-75.	Programming	4-19
4-76.	General Programming Relative to All Modes of Operation	4-19
4-78.	Automatic Mode of Operation Programming, Without Reseau	4-19
4-80.	Automatic Mode of Operation Programming, With Dodging	4-21
4-82.	Manual Mode of Operation, Single Cycle, Without Dodging	4-21
4-84.	Manual Mode of Operation, Single Cycle, With Dodging	4-21
4-86.	Reseau Printing	4-23
4-87.	Reseau Printing Setup	4-23
4-89.	Programming For Reseau Printing Without Dodging	4-23
4-91.	Reseau Printing Operation	4-24
4-93.	Programming For Reseau Printing, With Dodging	4-24
4-95.	Shut-Down of Printer	4-24
V	LUBRICATION	5-1
5-1.	Lubrication	5-1
VI	TROUBLE SHOOTING	6-1
6-1.	Trouble Shooting	6-1
6-3.	Exposure Lamp Replacement and Rebalance	6-3

LIST OF ILLUSTRATIONS

Number	Title	Page
Figure 1-1	Contact Duplicating And Reseau Printer	1-1
Figure 1-1	Punching Station Assembly	1-2
Figure 1-2	Printer Component Identification	1-3
Figure 1-3	Punching Station Component Identification	1-4
Figure 1-4	Elementary Wiring Diagram (sheet 1 of 3)	1-8
	Elementary Wiring Diagram (sheet 2 of 3)	1-9
	Elementary Wiring Diagram (sheet 3 of 3)	1-10
Figure 1-5	Control Circuit For Light Dodge (sheet 1 of 2)	1-11
	Control Circuit For Light Dodge (sheet 2 of 2)	1-12
Figure 1-6	Control Circuits For Light Dodge Circuit Board Build Up	1-13
Figure 1-7	Frame Separation Detector Wiring Diagram (sheet 1 of 4)	1-14
	Frame Separation Detector Wiring Diagram (sheet 2 of 4)	1-15
	Frame Separation Detector Wiring Diagram (sheet 3 of 4)	1-16
	Frame Separation Detector Wiring Diagram (sheet 4 of 4)	1-17
Figure 1-8	Air Flow Diagram	1-18

Approved For Release 2005/02/17 : CIA-RDP78B04770A001600030001-2

Approved For Release 2005/02/17 : CIA-RDP78B04770A001600030001-2

LIST OF ILLUSTRATIONS (CONT.)

Number	Title	Page
Figure 3-1	Printer Mounting Diagram And Space Requirements	3-2
Figure 3-2	Power Source Connection Diagram	3-3
Figure 3-3	Punching Station Installation Diagram	3-4
Figure 4-0	Frame Separation Detector Control Panel	4-2
Figure 4-1	Printer Control Panel	4-3
	Ledgend For Figure 4-1	4-4
Figure 4-2	Lower Drive Assembly Controls	4-9
Figure 4-3	Exposure Lamp Switch Panel Controls	4-10
Figure 4-4	Punching Station Operating Controls	4-11
Figure 4-5	Punching Station Film Threading	4-13
Figure 4-6	Raw Stock Threading Diagram	4-14
Figure 4-7	Raw Stock Loading	4-15
Figure 4-8	Original Film Threading	4-17
Figure 4-9	Original Film Loading Procedure	4-18
Figure 8-1	Printer-Contact Duplicating and Reseau (front view)	8-1
Figure 8-2	Printer-Contact Duplicating and Reseau (back view)	8-3
Figure 8-3	Drawer Latching Assembly	8-5
Figure 8-4	Printer (front view)	8-7
Figure 8-5	Printer (back view)	8-9
Figure 8-6	Printer (front view)	8-11
Figure 8-7	Upper Drive Assembly	8-13
Figure 8-8	Air Bag Assembly	8-16
Figure 8-9	Assembly-Spool Support	8-18
Figure 8-10	Drive Assembly, Upper left hand	8-20
Figure 8-11	Index Assembly, Raw Stock	8-23
Figure 8-12	Drive Module-Upper right hand	8-25
Figure 8-13	Latch Assembly, Left hand	8-28
Figure 8-14	Latch Assembly, Right hand	8-30
Figure 8-15	Seal-Light, Center	8-32
Figure 8-16	Assembly-Lower Drive	8-34
Figure 8-17	Lower Drive Assembly	8-36
Figure 8-18	Frame Separation Detector	8-39
Figure 8-19	Sensor Mounting	8-41
Figure 8-20	Drive Module, Left hand	8-43
Figure 8-21	Drive Module-Lower right hand	8-46
Figure 8-22	Assembly-Reseau Pin and Clamp	8-49
Figure 8-23	Control Panel Assembly	8-51
Figure 8-24	Switch Assembly	8-53
Figure 8-25	Lower Right Hand Drawer	8-55
Figure 8-26	Lens Assembly	8-57
Figure 8-27	Lamp Housing Assembly	8-58
Figure 8-28	Lower Left Hand Module Assembly	8-61
Figure 8-29	Cover Assembly	8-62
Figure 8-30	Base Assembly	8-63
Figure 8-31	Voltage Divider	8-65
Figure 8-32	Lamp Dodge Chassis	8-66
Figure 8-33	Control Assembly	8-68
Figure 8-34	Circuit Board Assembly	8-70
Figure 8-35	Circuit Board X1	8-71
Figure 8-36	Circuit Board X2	8-73
Figure 8-37	Circuit Board X3	8-75
Figure 8-38	Circuit Board X4	8-77
Figure 8-39	Component Board No. One (1)	8-79
Figure 8-40	Component Board No. Two (2)	8-81

Approved For Release 2005/02/17 : CIA-RDP78B04770A001600030001-2

Approved For Release 2005/02/17 : CIA-RDP78B04770A001600030001-2

LIST OF ILLUSTRATIONS (CONT.)

Number	Title	Page
Figure 8-41	Component Board No. Three (3)	8-83
Figure 8-42	Component Board No. Four (4)	8-85
Figure 8-43	Component Board No. Five (5)	8-87
Figure 8-44	Component Board No. Six (6)	8-89
Figure 8-45	Component Board No. Seven (7)	8-91

LIST OF TABLES

Number	Title	Page
Table 1-1	Leading Particulars	1-6
Table 2-1	Special Service Tools	2-1
Table 4-1	Mode Selection Chart (Frame Separation Detector)	4-5
Table 4-2	Frame Length Timer Control Settings	4-7
Table 4-3	Reference Density Control	4-20
Table 4-4	Frame Separation Detector Block Diagram	4-22
Table 4-5	Boundary Width Control Calibration	4-25
Table 5-1	Lubrication	5-1
Table 6-1	Trouble Shooting	6-1

Approved For Release 2005/02/17 : CIA-RDP78B04770A001600030001-2

Approved For Release 2005/02/17 : CIA-RDP78B04770A001600030001-2

SECTION I
INTRODUCTION AND DESCRIPTION

1-1. INTRODUCTION.

1-2. This manual contains operating and service instructions for the Contact Duplicating and Reseau Printer manufactured by [redacted] [redacted] Part Number F5600. An auxiliary Punching Station Assembly, [redacted] Part Number F5992, is also provided for film fiducial alignment and film punching for reseau printing. See figure 1-1 for identifying view of equipment and figures 1-2 and 1-3 for component identification.

STAT
STAT
STAT

1-3. DESCRIPTION.

1-4. CONTACT DUPLICATING AND RESEAU PRINTER. The printer is a self-contained, floor-mounted unit capable of duplicating photographic film, negative and positive, black and white only, of from 70 mm to 9-1/2 inches wide with format lengths up to 30 inches. The printer is also capable of accurately exposing a reseau grid on duplicating (raw stock) film.

1-5. The printer is designed to operate in four modes:

a. Automatic mode, including automatic exposure control without reseau.
b. Automatic mode, with manual exposure control without reseau.
c. Semiautomatic mode without reseau.
d. Semiautomatic mode with reseau.

The unit provides the capability for printing either through the base of the film, or, emulsion to emulsion.

1-6. FILM INPUT. The printer accomodates original and duplicating films with nominal base thicknesses from 2.0 to 7.0 mils having nominal widths of 70 mm to 9-1/2 inches. The film spools accomodate film lengths up to 500 feet.

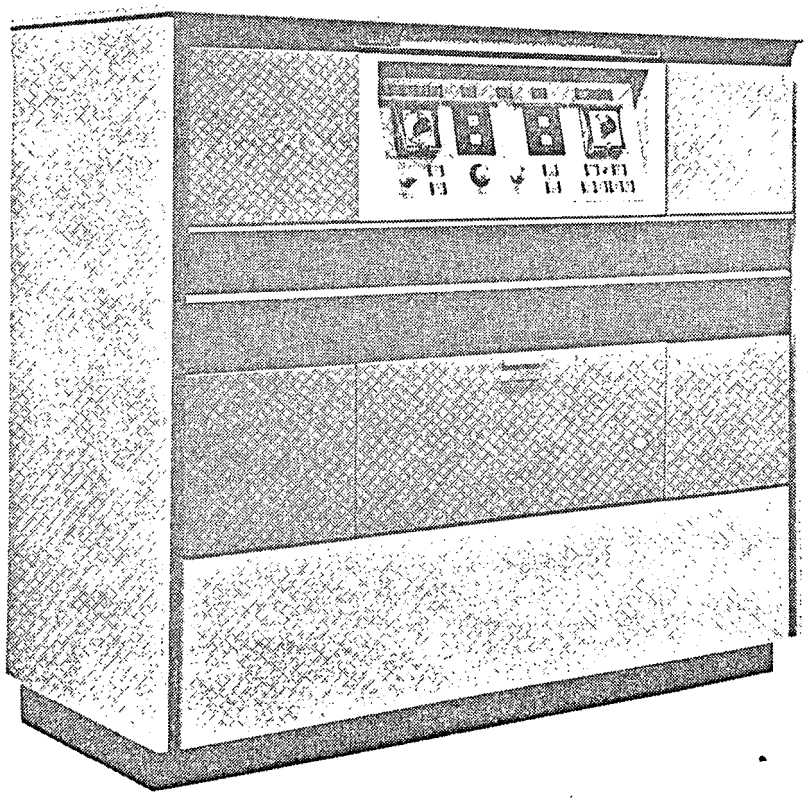

Figure 1-1. Contact Duplicating and Reseau Printer
(Patents Pending)

Approved For Release 2005/02/17 : CIA-RDP78B04770A001600030001-2

Approved For Release 2005/02/17 : CIA-RDP78B04770A001600030001-2

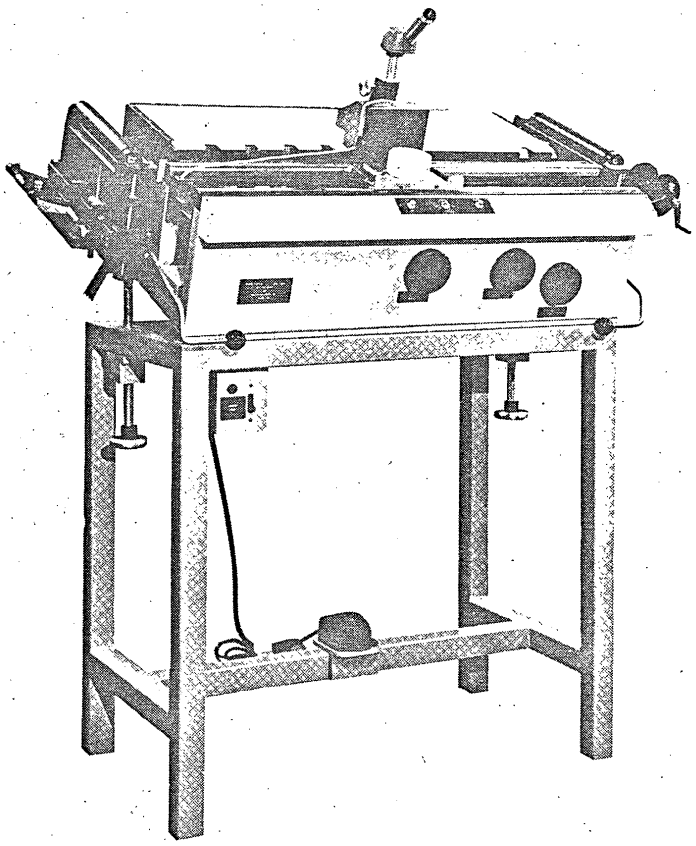

Figure 1-1. Punching Station Assembly

Approved For Release 2005/02/17 : CIA-RDP78B04770A001600030001-2

Approved For Release 2005/02/17 : CIA-RDP78B04770A001600030001-2

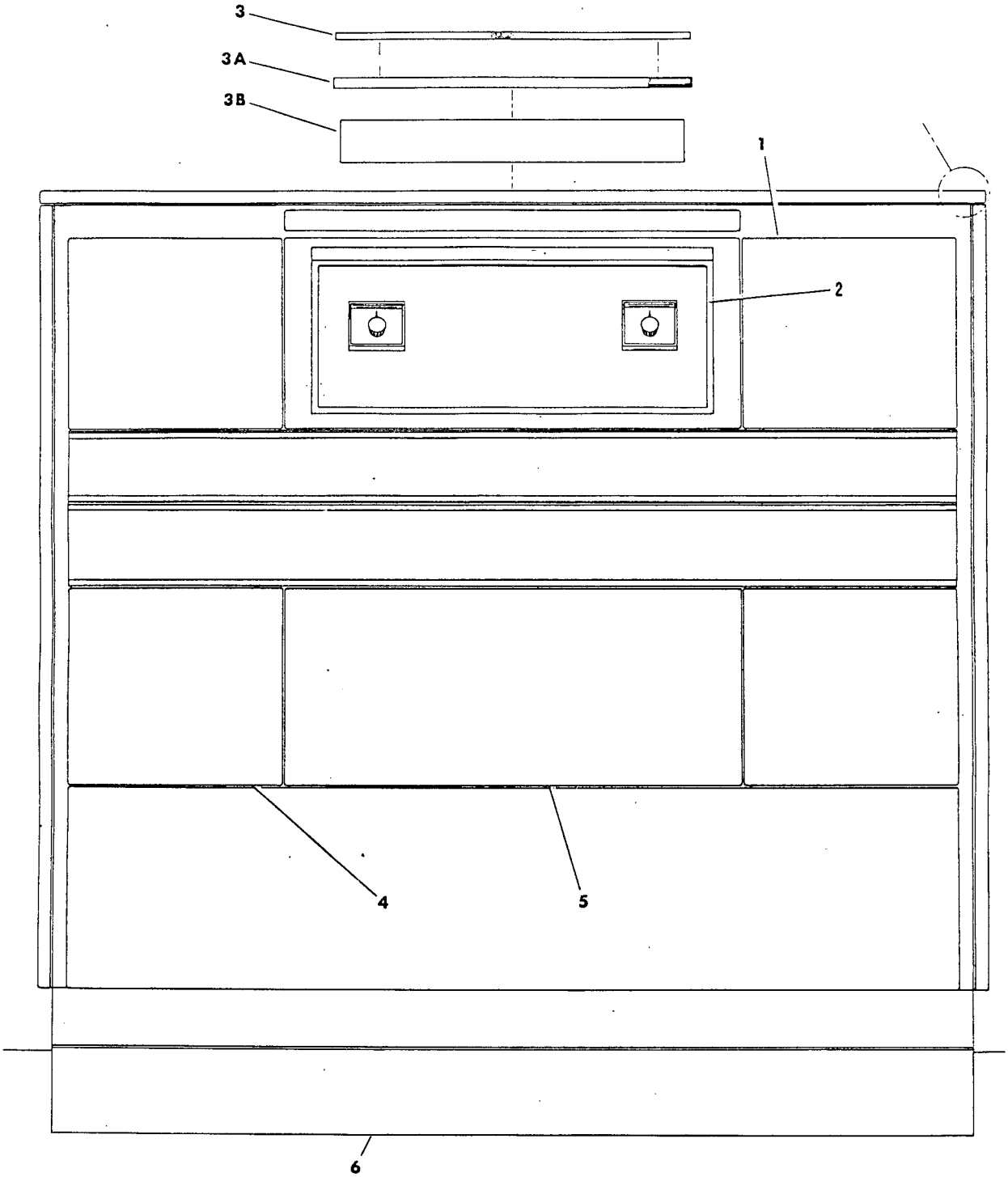

1 Upper Drive Assembly
2 Control Panel Assembly
3 Intake Air Filter
3A Filter Frame
3B Absolute Filter
4 Lower Drive Assembly
5 Lamp Programming Switch Assembly
6 Sub Base

Figure 1-2. Printer Component Identification

Approved For Release 2005/02/17 : CIA-RDP78B04770A001600030001-2

Approved For Release 2005/02/17 : CIA-RDP78B04770A001600030001-2

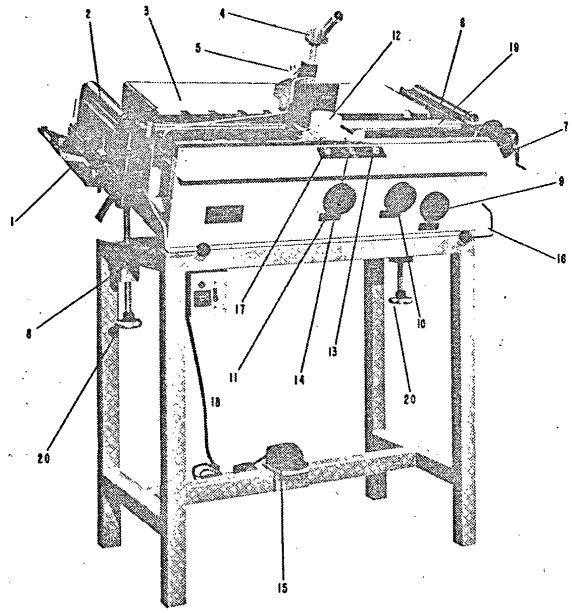

1 LH Film Support	6 Lead Roll	11 Transverse Aligning Knob (front to back)	16 Lead Roll Position Control Lever
2 Lead Roll	7 RH Film Support	12 Punch Carriage Clamp Knob	17 Slotted Punch Switch
3 Vacuum Table	8 Lead Roll Position Control Lever	13 Round Punch Switch	18 Vacuum Pump Switch
4 Macroscope	9 Skew Aligning Knob	14 Main Power Switch	19 Film Chip Tray
5 Macroscope Focus Knob	10 Longitudinal Aligning Knob (right to left)	15 Table Vacuum Foot Switch	20 Jack Screws (table tilting)

Figure 1-3. Punching Station Component Identification

Approved For Release 2005/02/17 : CIA-RDP78B04770A001600030001-2

Approved For Release 2005/02/17 : CIA-RDP78B04770A001600030001-2

1-7. PRINTING FORMAT. The printing format is continuously variable in width from 70mm to 9-1/2 inches and in lengths up to 30 inches. Suitable masking blanks are provided for the operator to produce masks for printing format sizes less than the maximum.

1-8. FILM TRANSPORT. Independent motorized transport systems are provided for the original and raw stock films. Each system is capable of automatically transporting a metered length of film across the printing area. The raw stock film transport system advances in one direction only (left to right). The original film transport system will operate in either direction, controllable by the operator. The printer is capable of automatically repeating selected frames of any quantity up to eighty in automatic mode. The length of raw stock transported in the metered mode is controllable by the operator. The two transport systems are synchronized in the automatic mode only.

1-9. FILM CONTACT. Film contact is attained during print cycle by means of an automatically controlled platen assembly with air bag component. Air supply for the inflation of the air bag is from an outside source of compressed air, water and oil-free, capable of providing 10 cubic feet of air per minute at 60 pounds per square inch minimum pressure.

1-10. EXPOSURE LIGHT. The exposure light consists of a multiple light source controllable by the operator in relation to the film being duplicated. The light source and exposure control system is designed for compatibility with Kodak Fine Grain Aerial Duplicating Film, Type 8430 (formerly SO-278, through a density range of 0.2 to 3.2.

1-11. EXPOSURE CONTROL. Exposure is controlled by means of a thirty second exposure timer graduated in one-half seconds with one second minimum setting. Dodging control is also provided.

1-12. PRINTING SPEED. The printer is capable of duplicating at least six, 9 x 30 inch, exposures per minute, exclusive of time required for the operator to align the film fiducials with the reseau, depending upon density of film.

1-13. RESOLUTION. The resolution capability of the printer is 300 lines per mm minimum on Kodak SO-267 film employing a standard Air Force target reduced in size with at least 400 lines per mm capability.

1-14. SERVICE CONDITIONS. The printer is suitable for operation in a "white room" area. When in operation, the printer will not appreciably contaminate or degrade "white room" conditions specified below.

a. Temperature: 70°F +- 0.5°
b. Relative Humidity: 50% +- 0.5%
c. Dust Count, maxima:
485 particles/cu ft 5 micron size.
10 particles/cu ft 10 micron size.
5 particles/cu ft 10 to 15 micron size.

1-15. ELECTRICAL REQUIREMENTS. The printer is designed to operate from a 208 volt, 3 phase, 60 cycle, 4-wire power supply. (See figures 1-4 through 1-6 for elementary wiring diagrams.)

1-16. RESEAU. The printer is equipped with a continuous line reseau having lines spaced at 1 cm intervals +- 0.010 mm. The reseau has a format of 30 by 9-1/2 inches. For identification purposes, every other line in one direction is numbered and every other line in the perpendicular direction is lettered. Means are provided in the printer for precise alignment of the fiducials on the film being duplicated with the reseau and for clamping the film in position after alignment. (Refer to operation with reseau procedures in Section IV.)

1-17. PUNCHING STATION ASSEMBLY. The auxiliary punching station provided is a precision aligning unit designed to accomplish precise alignment of the film fiducials in relation to the desired film punching pattern. The punched patterns (one round hole and one slot, or, combination thereof) in the film are used to facilitate alignment of the film fiducials on the film being duplicated with the reseau. The alignment of the punched film in the printer is accomplished by locating pins, controllable by the operator. After film is aligned, a clamping device is employed to ensure that located film remains positioned. Refer to punching station assembly operating procedures in Section IV.

Approved For Release 2005/02/17 : CIA-RDP78B04770A001600030001-2

Approved For Release 2005/02/17 : CIA-RDP78B04770A001600030001-2

1-18. LEADING PARTICULARS. See Table 1-1.

TABLE 1-1. LEADING PARTICULARS

Printer Physical Characteristics:	
Overall Length	66 IN.
Overall Width	30 IN.
Overall Height	60 IN.
Weight	LBS.
Printer Input Power Requirements:	
Voltage	208 VAC
Current	30 AMPS
Frequency	60 CPS
Phase	3 PH
No. of Wires	4
Printer Compressed Air Requirements:	
Demand	10 CFM
Pressure (minimum)	60 PSI
Connectors (one)	1-1/16-12 External Thread
NOTE: Air must be water and oil-free.	
Printer Vacuum Requirement:	
Vacuum	26 IN.
Displacement	CFM
Connectors (one)	1-1/16-12 External Thread
Printing Capability:	
Film Width	70 MM to 9-1/2 IN. Negative or positive
Print Format	30 IN. MAX
Repeat Prints	80 MAX
Film Capacity (original and raw stock)	500 FT MAX
Punching Station Physical Characteristics:	
Overall Length (including film spools)	59-1/4 IN.
Overall Width	22-3/4 IN.
Overall Height	21-7/8 IN.

Approved For Release 2005/02/17 : CIA-RDP78B04770A001600030001-2

Approved For Release 2005/02/17 : CIA-RDP78B04770A001600030001-2

TABLE 1-1. LEADING PARTICULARS (CONT)

Punching Station Physical Characteristics: (Cont)	
Weight	LBS
Punching Station Power Requirements:	
Voltage	115-208 VAC
Current	2 AMPS
Frequency	60 CPS
Phase	3 PH
No. of Wires	4
Punching Station Vacuum Requirement:	
Vacuum	26 IN.
Displacement	10 CFM
Punching Capability:	
Hole (one)	1/16 IN. DIA
Slot (one)	1/16 IN. WD x 3/16 IN. LG
Punching Station Macroscope:	
Magnification	40X
Field	0.240 IN.
Cross Line Disc	21 MM DIA
Punching Station Film Capacity:	
Width	70 MM to 9-1/2 IN.
Frame Format	30 IN. MAX
Spool Capacity	500 FT MAX

Approved For Release 2005/02/17 : CIA-RDP78B04770A001600030001-2

Approved For Release 2005/02/17 : CIA-RDP78B04770A001600030001-2

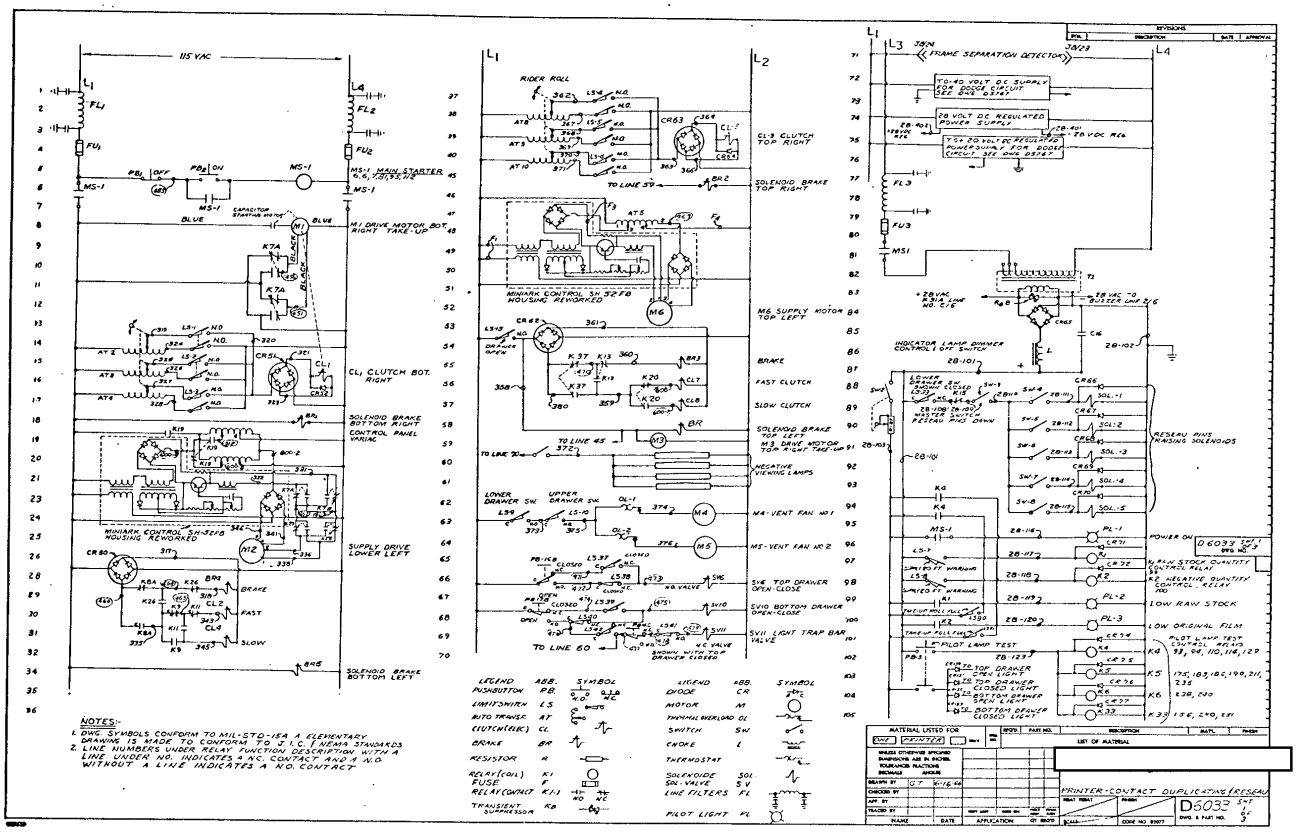

Figure 1-4. Elementary Wiring Diagram (Sheet 1 of 3)

Approved For Release 2005/02/17 : CIA-RDP78B04770A001600030001-2

STAT

Approved For Release 2005/02/17 : CIA-RDP78B04770A001600030001-2

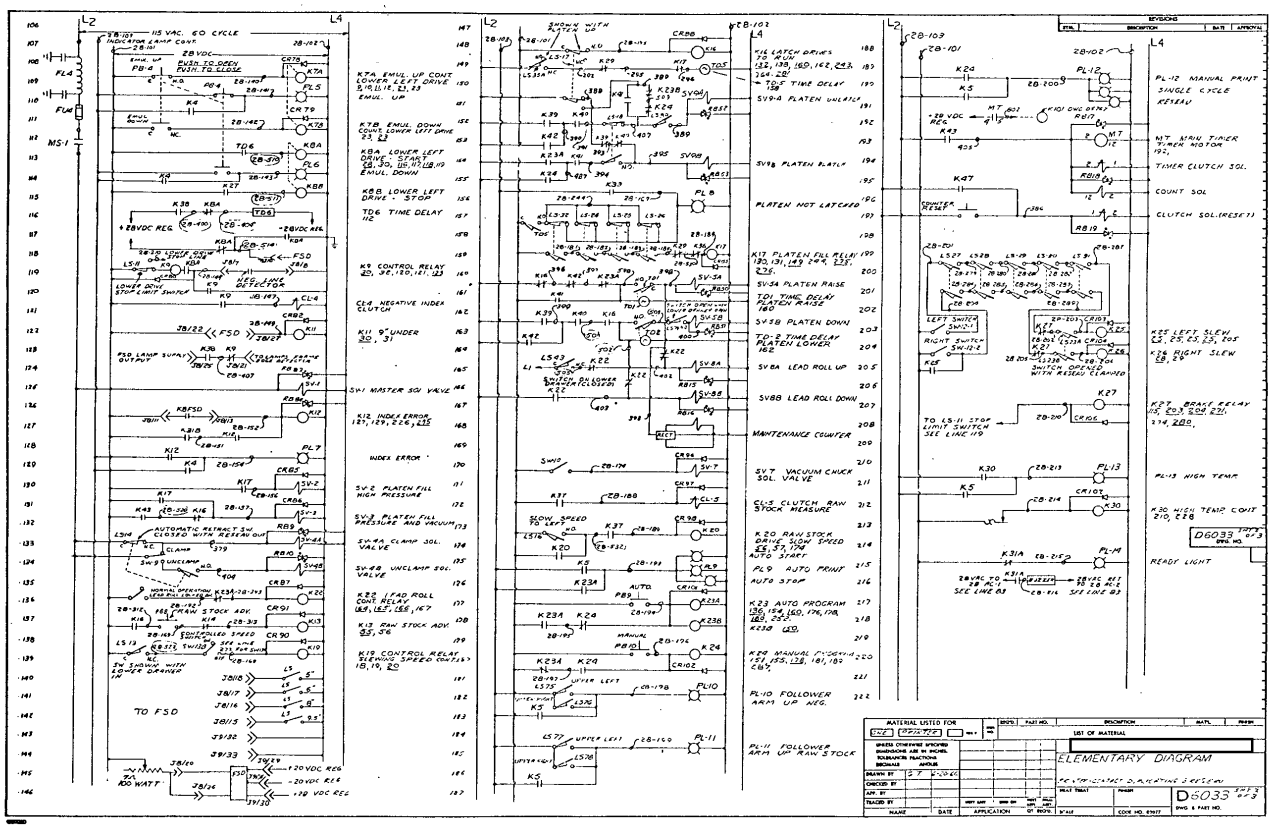

Figure 1-4. Elementary Wiring Diagram (Sheet 2 of 3)

Approved For Release 2005/02/17 : CIA-RDP78B04770A001600030001-2

STAT

Approved For Release 2005/02/17 : CIA-RDP78B04770A001600030001-2

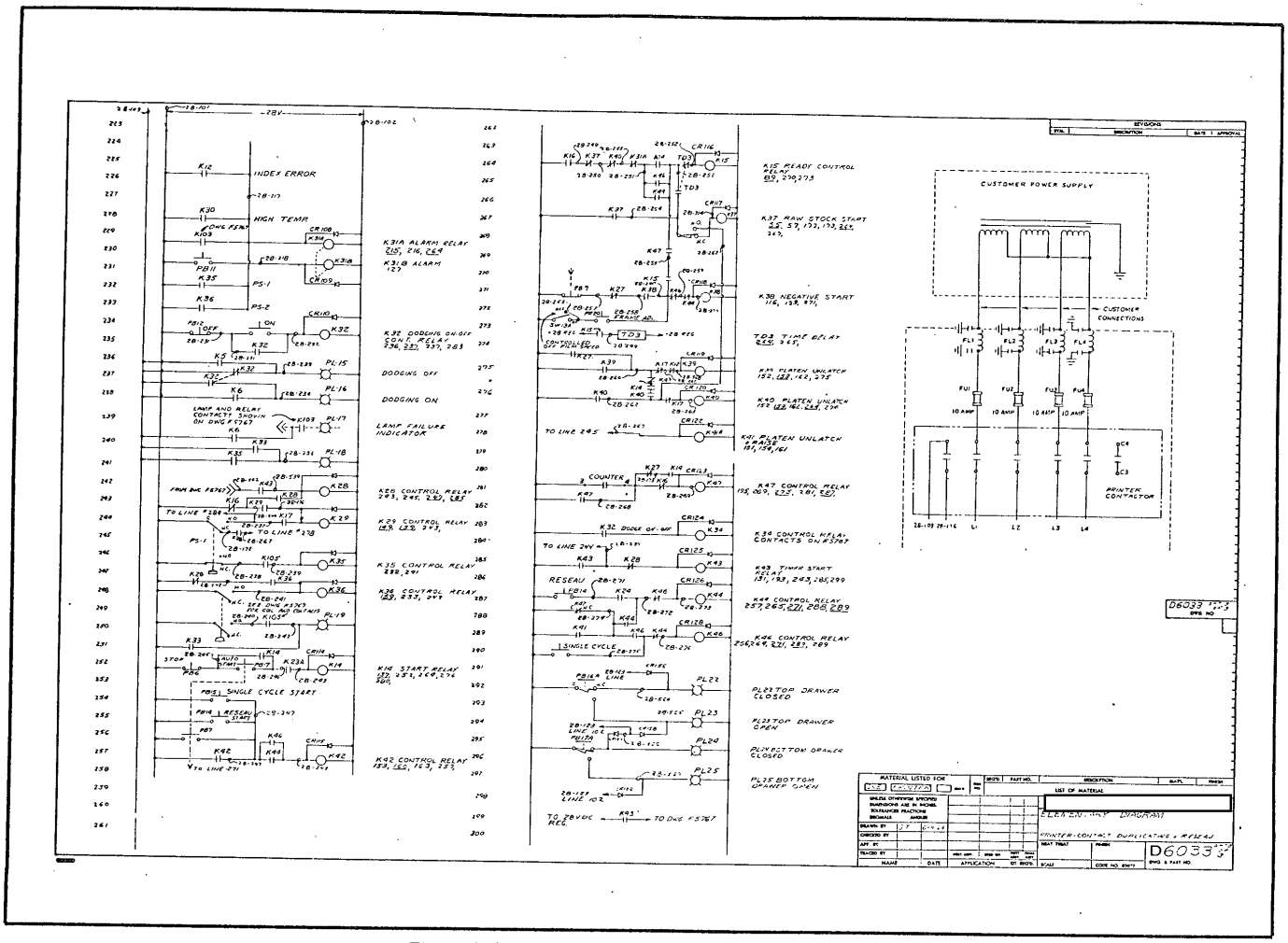

Figure 1-4. Elementary Wiring Diagram (Sheet 3 of 3)

Approved For Release 2005/02/17 : CIA-RDP78B04770A001600030001-2

STAT

Approved For Release 2005/02/17 : CIA-RDP78B04770A001600030001-2

LAMP DODGE CIRCUIT BOARD (M-H # 5771)

C1	Capacitor - 1 uf - 50 WVDC - Mylar or Sprague
CR1, CR2, CR3, CR4, CR5	Diode 1N459
R1	Resistor, 7.5 K
R2	Resistor, 9.1 K
R3	Resistor, 24 K
R5	Resistor, 360 Ohms, 2 Watt
R6	Resistor, 5.1 K
R7	Resistor, 6.8 K
R8	Resistor, 1 K
R10	Resistor, 2.2 K
R11	Resistor, 47 K
R12, R12A	Resistor, 22K
R13	Resistor, 150 Ohm
R14, R4	Resistor, 3.9 K
R15	Resistor, 3.9 K - 1/4 Watt
R16	5 M Trimpot - Bournes # 305 1L1-505
R17	20 K Trimpot - Beckman & Helitrim # 56LR20K
RB20	Zener Diode 1N757
Q1, Q2, Q3, Q4, Q7	Transistor, 2N3704 - Texas Instrument
Q5, Q10	Transistor, 2N930
Q6	Transistor, 2N2905 - Texas Instrument
	Mot., - Sprague
Q8	Transistor, 2N1483 - Silicon Transistor Corp.
Q9	Transistor, 2N3702 - Texas Instrument

EXPOSURE CONTROL CIRCUIT BOARD X1 (M-H D6369)

C1	Capacitor, .68 ufd - Polarized Tantalum 35 V
C2, C3	Capacitor, 82 pfd - Silver Mica, 500 V
CR1	Zener Diode, 1N750A
CR2, CR3, CR4, CR5, CR6, CR7	Diode, 1N459 - Texas Instrument or Sylvania
R1, R13	Resistor, 5.1 K
R2	Resistor, 2.2 K
R3	Resistor, 560 Ohms
R4	Resistor, 6.8 K
R5, R6, R9	Resistor, 2.7 K
R7	Resistor, 8.2 K
R8	Resistor, 1.5 K
R10	Resistor, 22 K
R11, R18	Resistor, 3 K
R12	Resistor, 680 K
R14	Resistor, 30 K
R15	Resistor, 75 K
R16	Resistor, 300 K
R17	Resistor, 10 K
R19	Resistor, 7.5 K
Q1, Q2, Q3, Q5, Q6, Q8, Q9	Transistor, 2N3704
Q4	Transistor, 2N2219
Q7	Transistor, 2N3702

EXPOSURE CONTROL CIRCUIT BOARD X2 (M-H D6368)

C1, C2	Capacitor, 330 pfd - Silver Mica, 500 V
C3	Capacitor, 0.68 ufd - Polarized Tantalum PSU
CR1, CR2, CR3, CR4, CR5, CR6, CR7, CR8, CR9, CR10, CR11, CR12, CR13, CR14, CR16, CR17, CR19	Diode, 1N459
CR15, CR18	Diode, 1N914
R1, R6, R9	Resistor, 2.7 K
R2, R5	Resistor, 7.5 K
R3, R4	Resistor, 20 K
R7	Resistor, 27 K
R10	Resistor, 30 K
R11, R13, R14, R15	Resistor, 3 K
R12	Resistor, 330 K
R16	Resistor, 24 K
R17, R8	Resistor, 22 K
Q1, Q2, Q3, Q4	Transistor, 2N2219
Q5, Q6, Q7, Q8, Q9	Transistor, 2N3704

EXPOSURE CONTROL CIRCUIT BOARD X3 (M-H D6367)

C1	Capacitor, 10 ufd - Polarized Tantalum 35 V
C2	Capacitor, 20.0 ufd - Polarized Tantalum 35 V
CR1, CR2, CR3, CR4, CR5, CR6, CR7, CR8, CR9, CR10, CR11, CR12, CR13, CR14, CR15, CR16, CR17, CR18	Diode, 1N459
R1, R8, R10	Resistor, 27 K
R2, R4, R5, R6, R9	Resistor, 2.7 K
R3	Resistor, 10 K
R7	Resistor, 4.7 K
R11	Resistor, 6.8 K
R12, R14	Resistor, 3 K
R13	Resistor, 330 K
R15	Resistor, 12 K
R17	Resistor, 2 K
Q1, Q2, Q3, Q4, Q5	Transistor, 2N2219
Q6, Q7, Q8, Q9	Transistor, 2N3704

EXPOSURE CONTROL CIRCUIT BOARD X4 (M-H D6419)

C1, C2	Capacitor - 1 ufd 100 V - Mylar
C3, C4	Capacitor, 120 ufd, 35 V - Polarized Tantalum
R1	Resistor, 100 Ohm

EXPOSURE OVERRIDE CONTROL (M-H D5712)

Q21, Q24, Q25	Transistor, 2N2219
Q22	Transistor, 2N2905
Q23	Transistor, 2N3200
R28	Resistor, 1 K, 1 W
R29	Resistor Trimpot, 1.0 K, 1/4 Watt min.
R30	Resistor, 2.4 K
R31	Resistor, 5.36 K, 1/2 Watt - 1%
R32	Resistor, 2 Watt
R33, R34, R35, R36, R37	Resistor Multi-turn Trimpots, 5 K, 1/4 Watt min.
R38	Resistor, 8.06 K, 1/8 Watt, 1% Tol.
R39	Resistor, 4.02 K, 1/8 Watt, 1% Tol.
R40	Resistor, 2.00 K, 1/8 Watt, 1% Tol.
R41	Resistor, 1.00 K, 1/4 Watt, 1% Tol.
R42	Resistor, 499 Ohms, 1/4 Watt, 1% Tol.
RB6	Zener Diode, 1N754
RB7	Zener Diode, 1N3508
SW1	Dual Concentric Rotary Switch - Centralab PA046

NEGATIVE POWER SUPPLY (M-H D 6177)

C7	Capacitor, .1 ufd
C8	Capacitor, 1 ufd, 50 V Tantalitic
F1, F2	Fuse, 1/2 Amp - Fast Blow
Q26, Q29	Transistor, 2N3200
Q27	Transistor, 2N3186
Q28	Transistor, 2N2905
R44	Resistor, 1.8 K, 2 Watts
R45	Resistor, 1.3 K, 2 Watts
R46, R47	Resistor, 1 Ohm
RB2	Zener Diode, 1N763-3
RB3, RB4, RB5	Zener Diode, 1N763-2

NOTES:

1. Unless noted otherwise, Resistors are half (1/2) watt +- 5% standard carbon composition.
2. Transistors, unless otherwise noted, may be purchased from any recognized transistor manufacturer.
3. Relays K101, K102, K103, K104, K105, K106A, K106B, and K34 (Found on D6033, Line 283) are Allied T-163-4C. The Diodes (Sarkes-Tarzian # 20C) in parallel with each relay are called out on F6159.

Figure 1-5. Control Circuits For Light Dodge (Sheet 1 of 2)

Approved For Release 2005/02/17 : CIA-RDP78B04770A001600030001-2

Approved For Release 2005/02/17 : CIA-RDP78B04770A001600030001-2

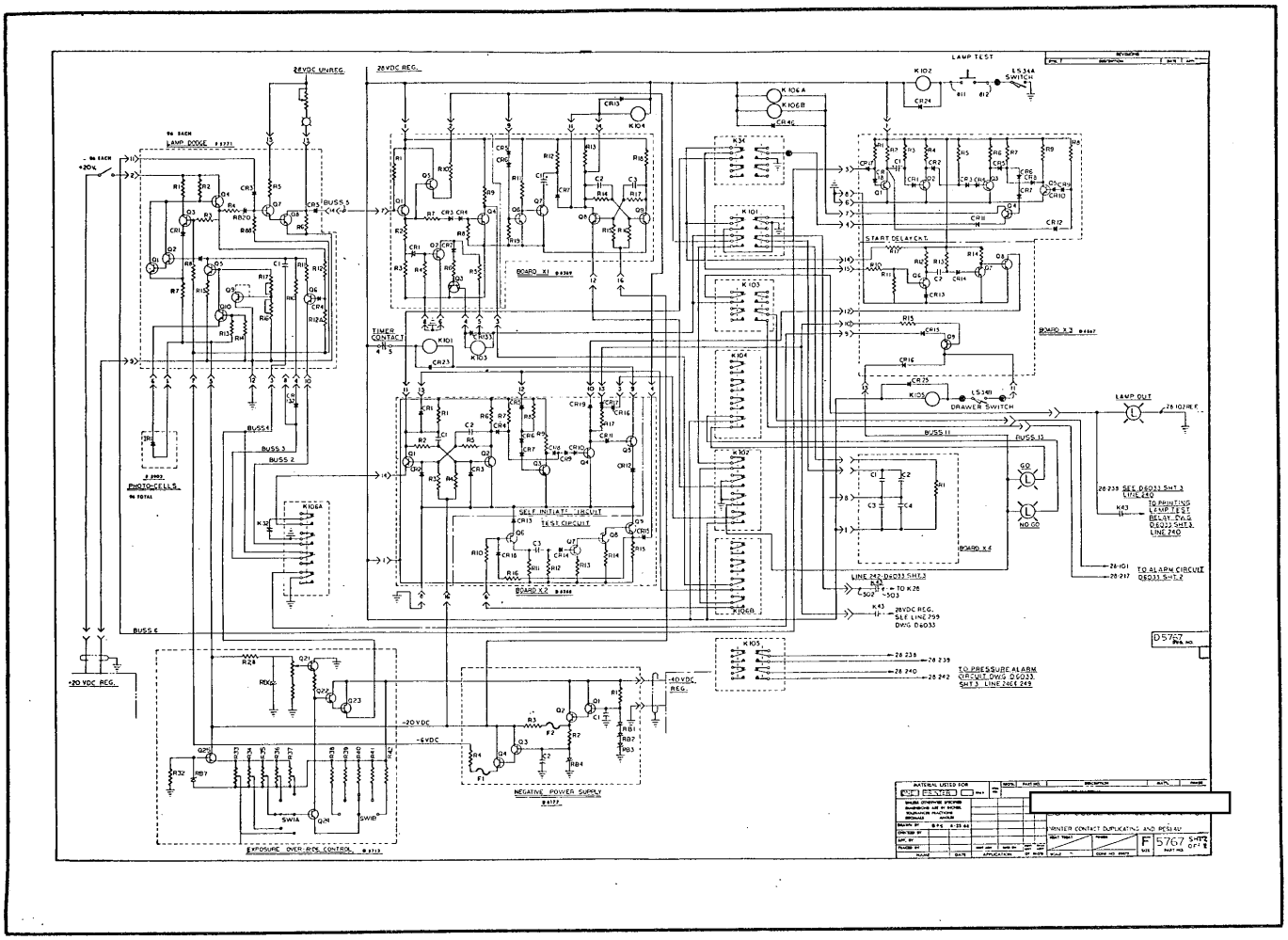

Figure 1-5. Control Circuits For Light Dodge (Sheet 2 of 2)

Approved For Release 2005/02/17 : CIA-RDP78B04770A001600030001-2

STAT

Approved For Release 2005/02/17 : CIA-RDP78B04770A001600030001-2

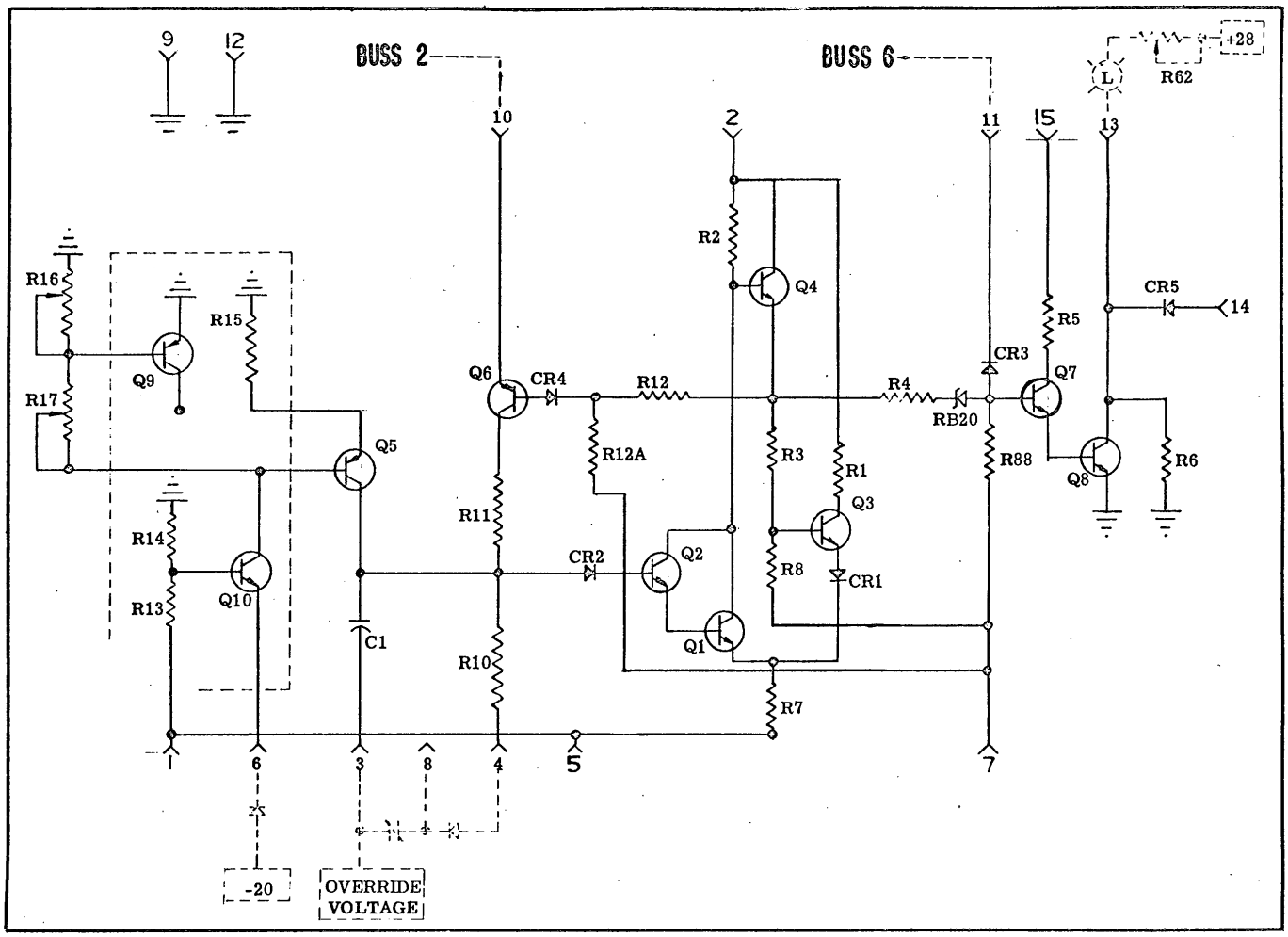

Figure 1-6. Control Circuits For Light Dodge Circuit Board Build-Up

Approved For Release 2005/02/17 : CIA-RDP78B04770A001600030001-2

Approved For Release 2005/02/17 : CIA-RDP78B04770A001600030001-2

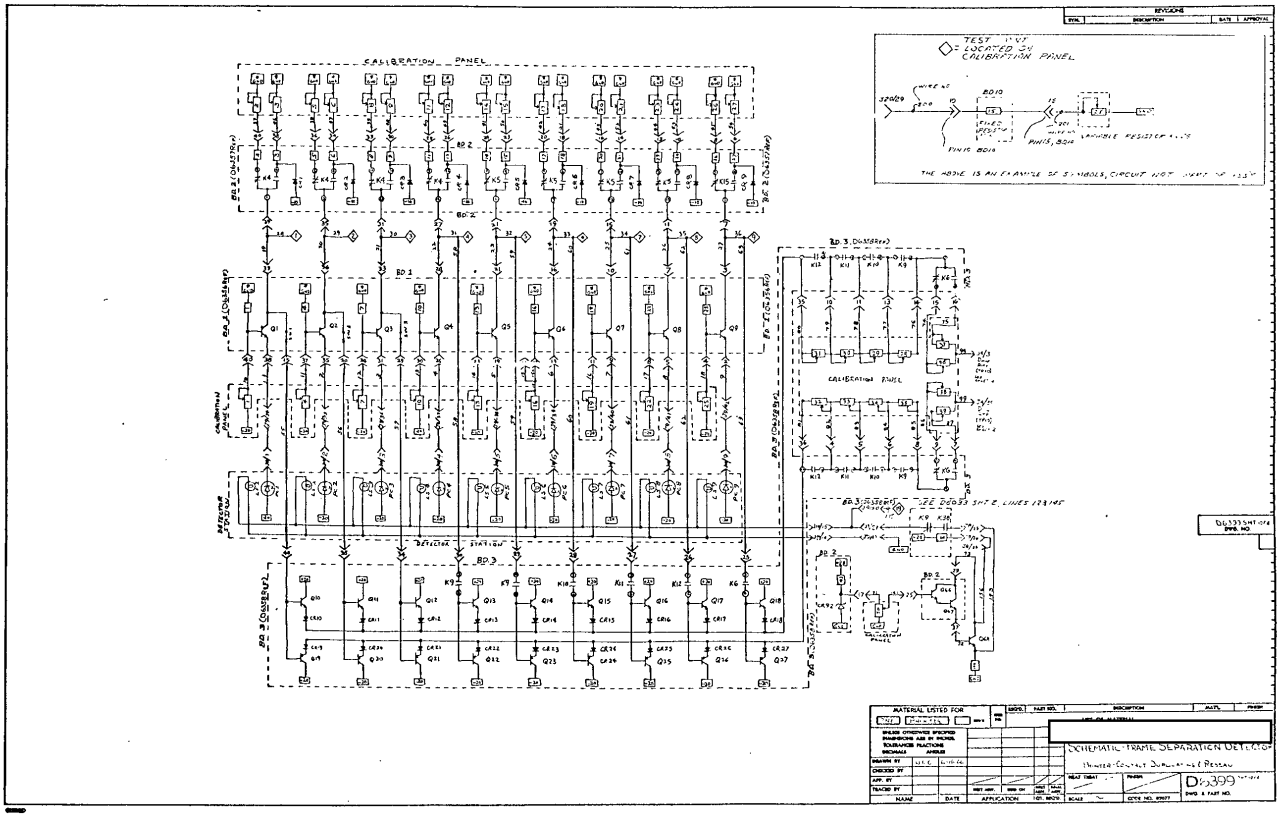

Figure 1-7. Frame Separation Detector Wiring Diagram, Sheet 1 of 4

STAT

Approved For Release 2005/02/17 : CIA-RDP78B04770A001600030001-2

Approved For Release 2005/02/17 : CIA-RDP78B04770A001600030001-2

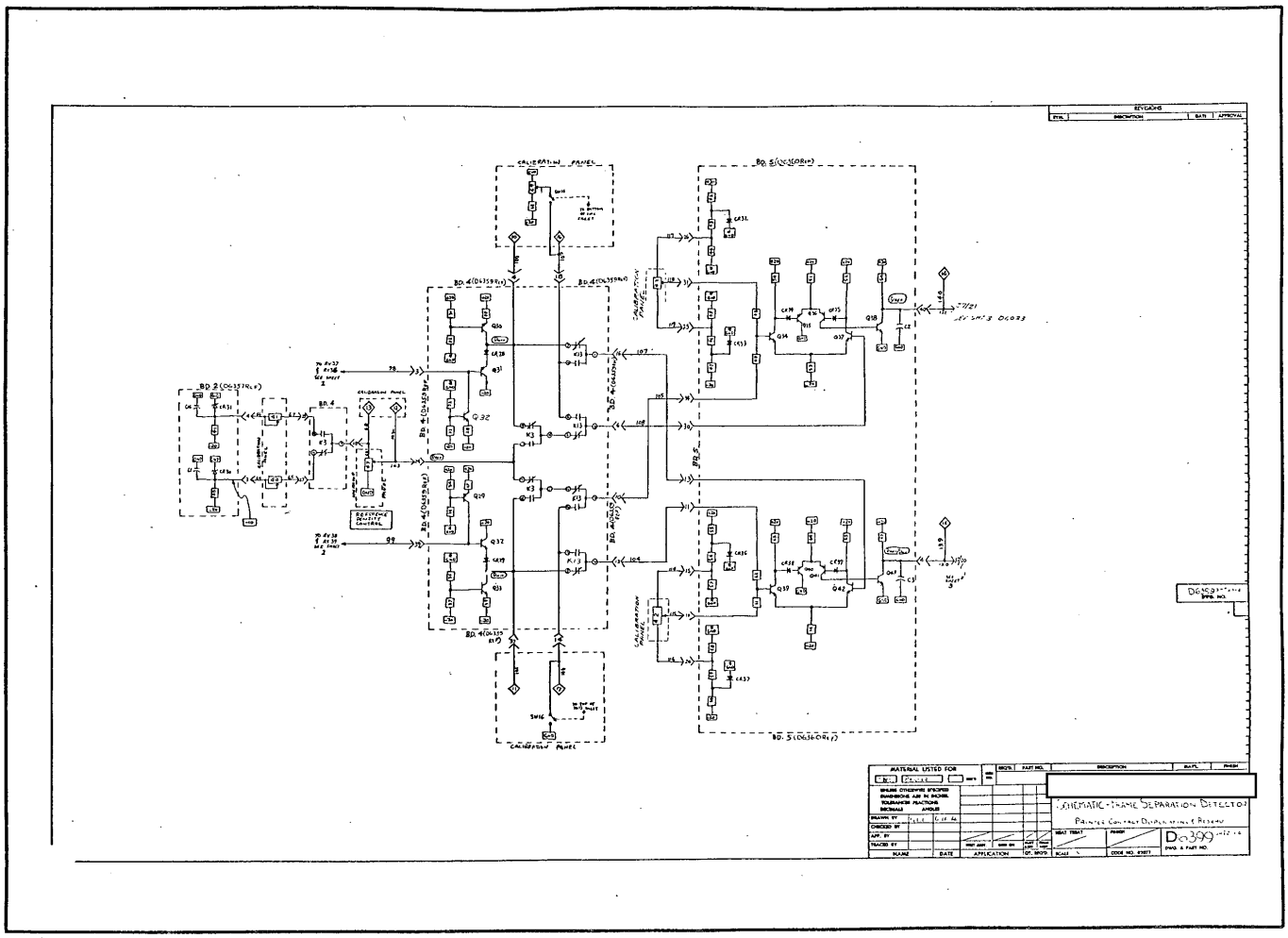

Figure 1-7. Frame Separation Detector Wiring Diagram, Sheet 2 of 4

STAT

Approved For Release 2005/02/17 : CIA-RDP78B04770A001600030001-2

Approved For Release 2005/02/17 : CIA-RDP78B04770A001600030001-2

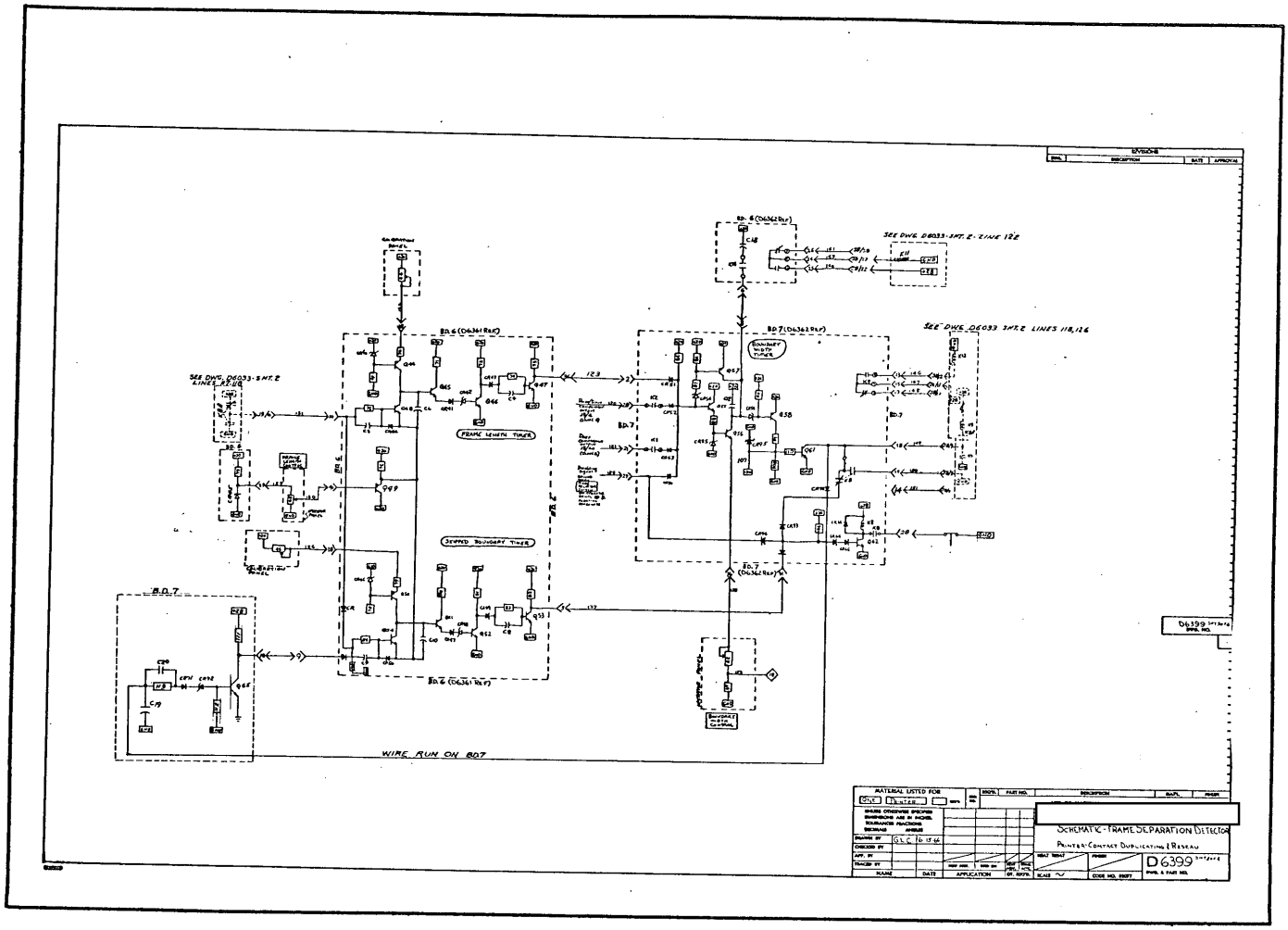

Figure 1-7. Frame Separation Detector Wiring Diagram, Sheet 3 of 4

Approved For Release 2005/02/17 : CIA-RDP78B04770A001600030001-2

STAT

Approved For Release 2005/02/17 : CIA-RDP78B04770A001600030001-2

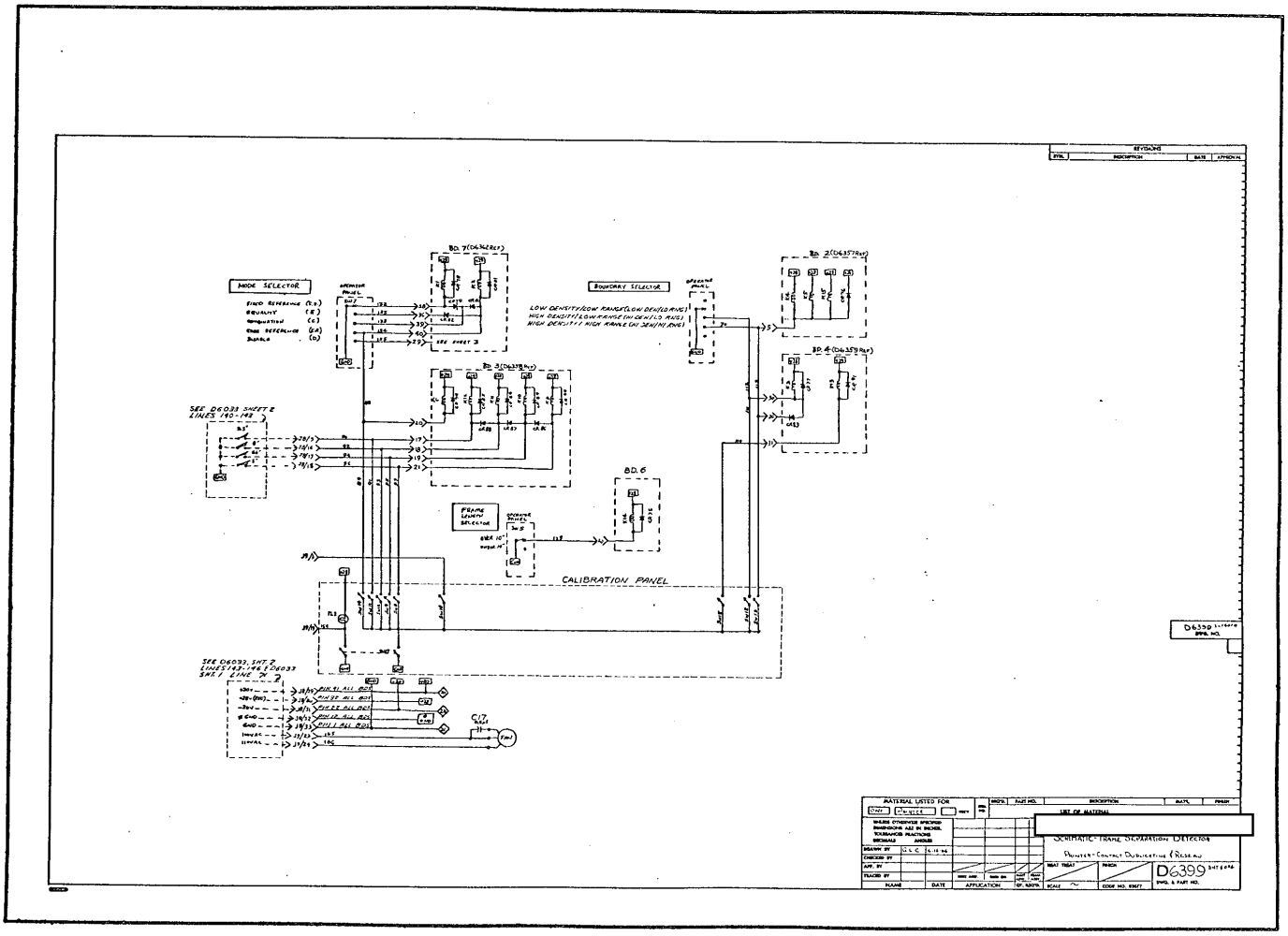

Figure 1-7. Frame Separation Detector Wiring Diagram, Sheet 4 of 4

Approved For Release 2005/02/17 : CIA-RDP78B04770A001600030001-2

STAT

Approved For Release 2005/02/17 : CIA-RDP78B04770A001600030001-2

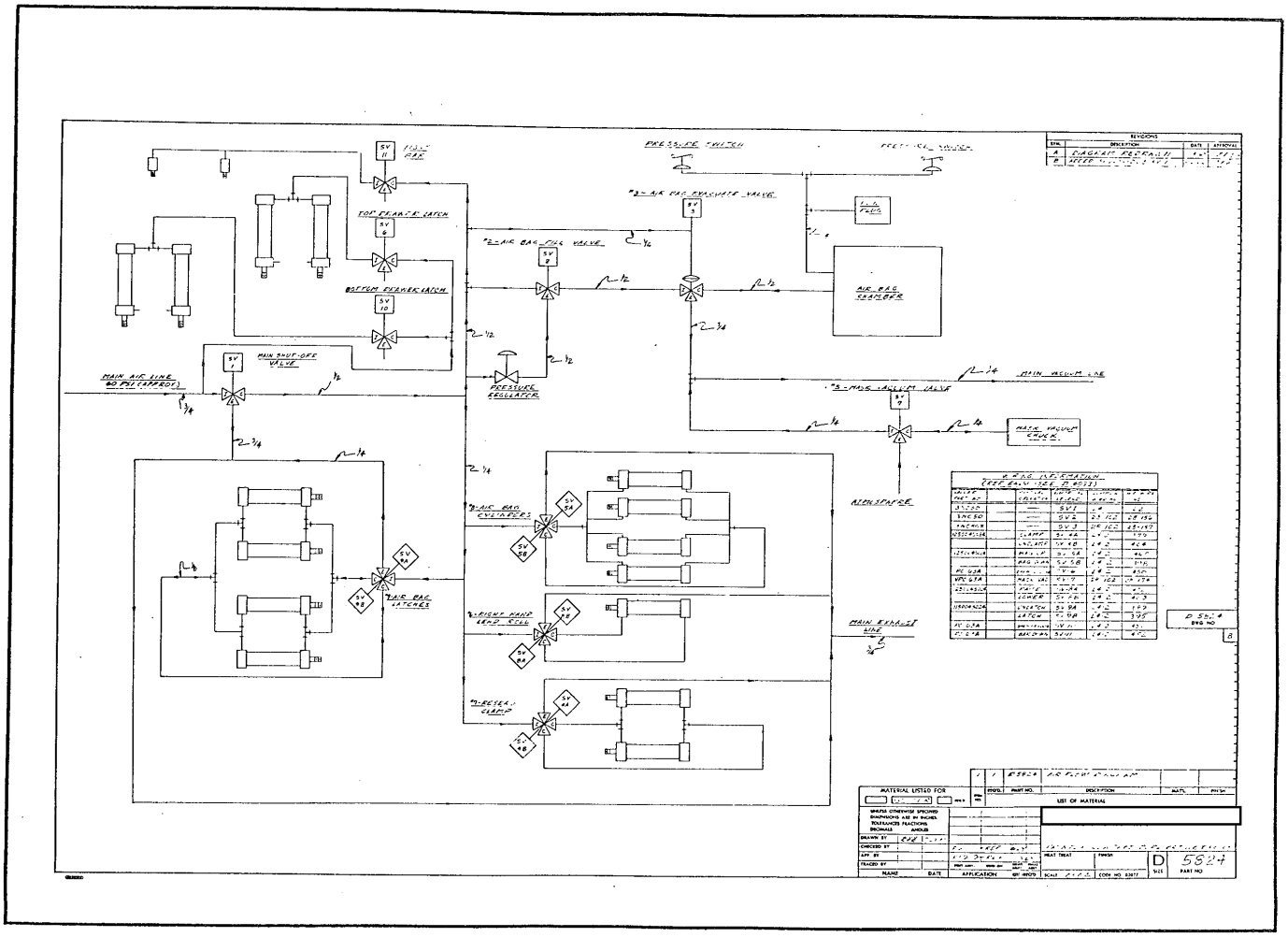

Figure 1-8. Air Flow Diagram

Approved For Release 2005/02/17 : CIA-RDP78B04770A001600030001-2

STAT

Approved For Release 2005/02/17 : CIA-RDP78B04770A001600030001-2

SECTION II
SPECIAL SERVICE TOOLS

2-1. SPECIAL SERVICE TOOLS

2-2. Special service tools recommended for use with the printer are listed in Table 2-1.

TABLE 2-1. SPECIAL SERVICE TOOLS

NOMENCLATURE	APPLICATION
Vacuum Tube Volt-Ohmmeter, [redacted] or equivalent	General trouble shooting
V.T.V.M., H.P. 410C, [redacted] or equivalent	Low-level measurements for calibration of the Frame Edge Detector circuits
Lamp Balance Indicator, [redacted] or equivalent	Balance lamps of light source
Oscilloscope, Dual Trace, [redacted] or equivalent	Set up light dodge circuitry
Reseau Handles, [redacted] or equivalent	Installation of reseau in printer and removal of printing glass
9" x 9" piece of film, flashed and processed to density of 2.0	Frame Edge Detector calibration

STAT

STAT

STAT

STAT

STAT

Approved For Release 2005/02/17 : CIA-RDP78B04770A001600030001-2

Approved For Release 2005/02/17 : CIA-RDP78B04770A001600030001-2

SECTION III
PREPARATION FOR USE

3-1. PREPARATION FOR USE.

3-2. INSTALLATION OF PRINTER. The printer is designed for floor mounting in a "white room" area. Refer to figure 3-1 for mounting diagram and space requirements. Refer to figure 3-2 for power source diagram.

3-3. After mounting of printer as described above, proceed with initial preparation procedure as follows:

a. Turn on main power supply to the printer by depressing "ON" button (9, figure 4-1).

b. Push "PANEL TEST" button (7) and observe indicator stations (1, 2, 3, 4, 5, 6, 8, 9, 10, 11, 13, 16, 30, 32, 33, 36, 37, 39, and 40). All shall be completely illuminated with "PANEL TEST" button "IN". Adjust "PANEL INTENSITY" control (21) to desired amount of brightness. With "PANEL TEST" button (7) released, "ORIGINAL FILM RIDER" (6) and "RAW STOCK RIDER" (8) indicators will be "ON" to indicate rolls are locked up.

c. Open hinged door (10), figure 4-3). Turn all exposure lamp switches (6) to "ON" position. Check exposure control system by depressing "LAMP TEST" Button (1). A "GO" or "NO GO" indicator (3, 2) will light. If "NO GO", refer to trouble shooting, Section VI and correct fault.

NOTE

Pressure Switch # 1 indicator will also light due to machine circuitry. THIS IS NOT A FAULT INDICATION.

d. Turn all lamp switches (6) "OFF".

e. Turn off main power supply to the printer by depressing "OFF" button (11, figure 4-1).

f. Load printer with original film and duplicate film (raw stock) as directed in printer film loading paragraphs of Section IV.

g. Turn printer on by depressing "ON" button (9, figure 4-1). If machine is operable, fault alarm will not sound and "READY" (10, figure 4-1) indicator will illuminate. If fault alarm sounds, refer to trouble shooting in Section VI and correct fault before operating machine.

h. Set "PRINTS PER FRAME" (12, figure 4-1) on 1.

i. Set "ADVANCE INCREMENT" on 0.

j. Set "EXPOSURE TIMER" (35) on 0.

k. Printer is now ready for programming for mode of operatio desired. Refer to Section IV for mode operation procedures.

3-4. INSTALLATION OF PUNCHING STATION ASSEMBLY. The punching station assembly consists of a stand with a hinged punching table mounted on the top, and a separate vacuum pump assembly. Two (2) Jackscrews (20, figure 1-3) are provided (one at each end of table) to permit tilting of punching table upward and toward operator. Install punching station as below:

a. Locate punching station in any area convenient to the printer installation. The table is not designed for "white room" operation, due to contamination produced from punching film.

b. Level punching station by adjusting feet provided on each leg of stand.

c. Locate vacuum pump assembly such that electric control lines and vacuum line may be routed to punching station assembly readily.

d. Provide small vacuum cleaner to remove punched film chips from film chip tray (10, figure 1-3) as required.

e. Route vacuum line and wires to turn vacuum pump on and off to punching station.

3-5. Work area required for punching station operation is 6-1/2 feet long, 4 feet wide, and 6 feet high, minimum. Refer to figure 3-3 for installation diagram.

Approved For Release 2005/02/17 : CIA-RDP78B04770A001600030001-2

Approved For Release 2005/02/17 : CIA-RDP78B04770A001600030001-2

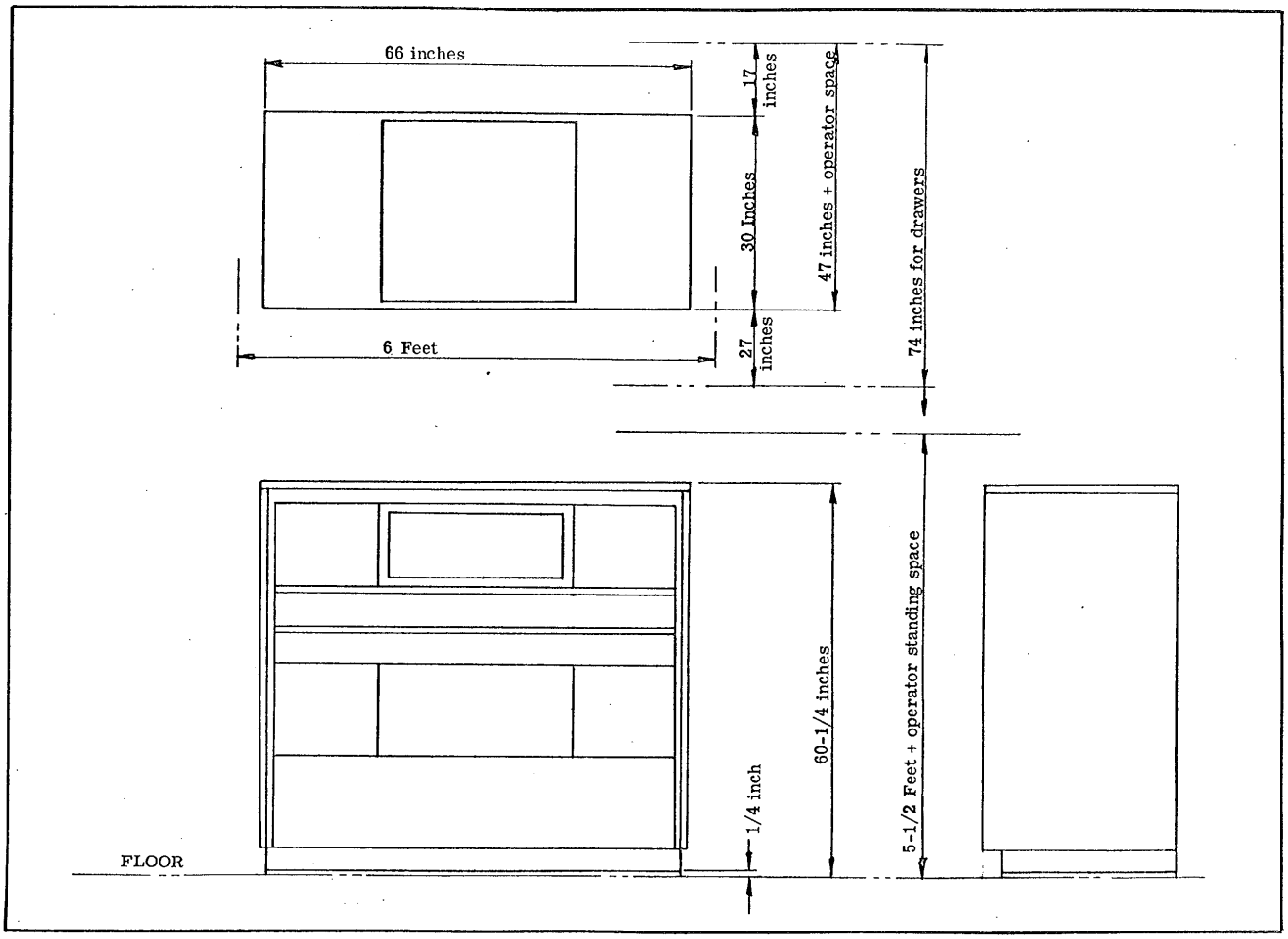

Figure 3-1. Printer Mounting Diagram and Space Requirements

Approved For Release 2005/02/17 : CIA-RDP78B04770A001600030001-2

Approved For Release 2005/02/17 : CIA-RDP78B04770A001600030001-2

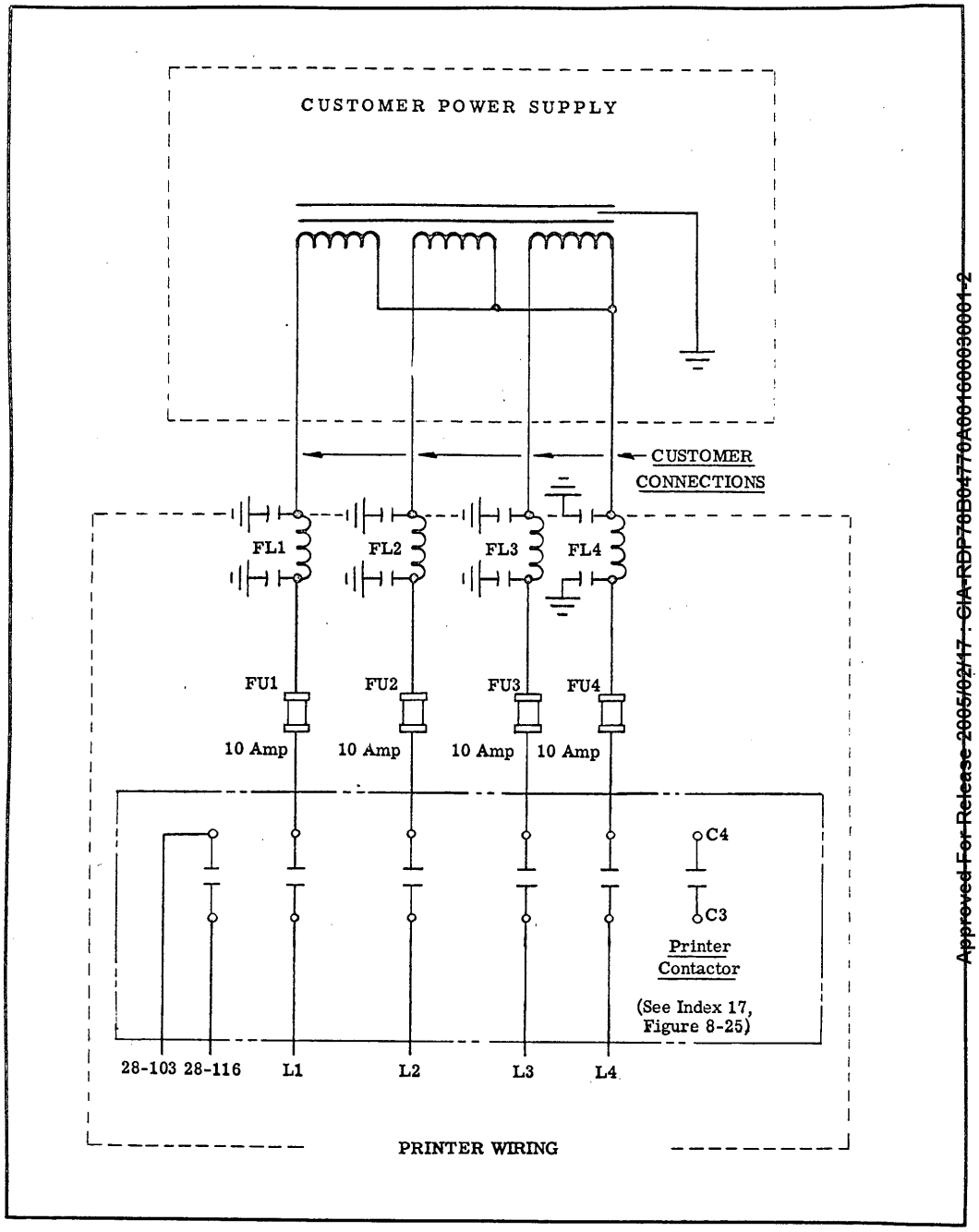

Figure 3-2. Power Source Connection Diagram

Approved For Release 2005/02/17 : CIA-RDP78B04770A001600030001-2

Approved For Release 2005/02/17 : CIA-RDP78B04770A001600030001-2

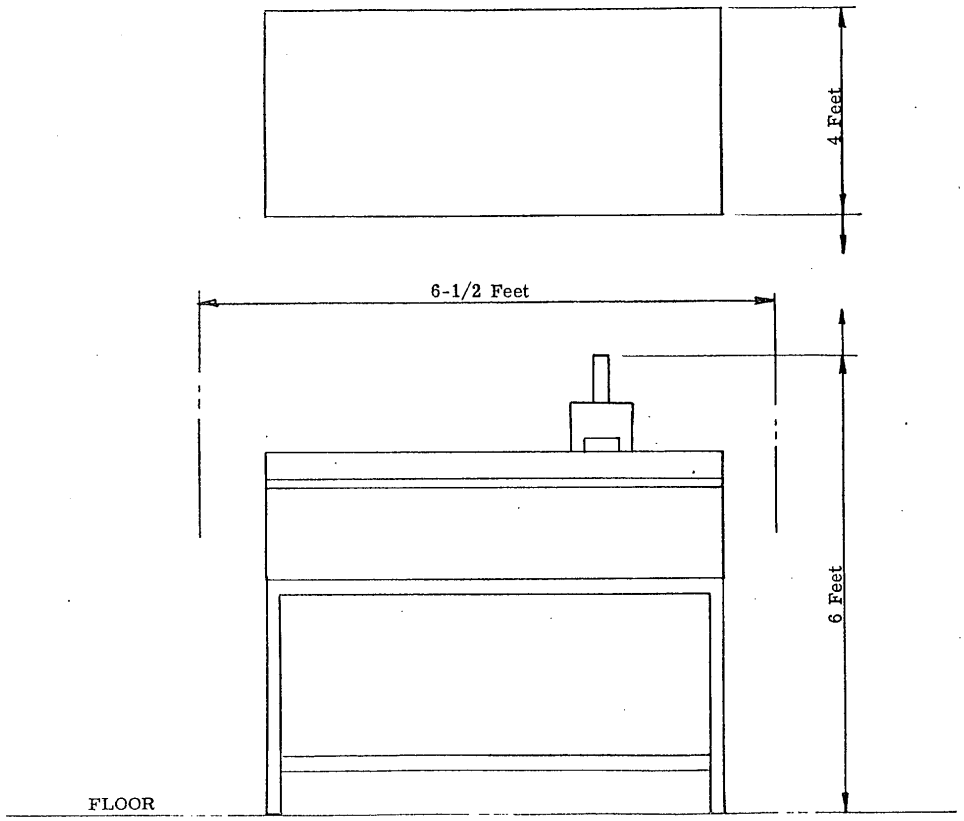

Figure 3-3. Punching Station Installation Diagram

Approved For Release 2005/02/17 : CIA-RDP78B04770A001600030001-2

Approved For Release 2005/02/17 : CIA-RDP78B04770A001600030001-2

SECTION IV
OPERATING INSTRUCTIONS

4-1. PURPOSE AND USE OF PRINTER OPERATING AND PROGRAMMING CONTROLS.

4-2. The printer operating and programming controls are located on the control panel (Figure 4-1), the top of the lower drive assembly (Figure 4-2), and the top of the lower left hand drive module (Figure 4-0). Exposure lamp programming switches are found on the switch panel (Figure 4-3), and the "Raw Stock Advance Increment" control (14, Figure 4-7) is found on face of top left hand raw stock drive module. Purpose and use of controls follow.

4-3. The main power "ON" button (9, Figure 4-1) admits source power to the printer, starts circulating and cooling fans, energizes all drive motors, energizes power supplies, and circuitry; energizes master solenoid air valves. Face of button illuminates when printer has main power "ON".

4-4. The main power "OFF" button (11, Figure 4-1) breaks source power circuit to printer, thereby, shutting down all operation of printer. The button must be held in the IN position until printer completes print cycle and stops.

4-5. The "READY" Indicator (10, Figure 4-1) illuminates to indicate all faults have been corrected and the machine is ready for programming.

4-6. "LOW RAW STOCK" Indicator (8, Figure 4-1) illuminates when raw stock supply is depleted or take-up spool becomes full. (Fault alarm will not sound.)

4-7. "PANEL TEST" Push Button (7, Figure 4-1) is used as a press-to-test means of checking control panel indicator lamps for burn-out. Button may be depressed for test at any time with main power on.

4-8. "LOW ORIGINAL FILM" Indicator (6, Figure 4-1) illuminates when original film supply is depleted or take-up spool becomes full. (Fault alarm will not sound.)

4-9. "INDEX ERROR" Indicator (5, Figure 4-1) illuminates when an indexing error in original film advance occurs, automatically shuts down print cycle, and energizes fault alarm.

4-10. "PLATEN LATCH" Indicator (4, Figure 4-1) illuminates when a fault occurs in automatic platen latching in down position, automatically shuts down print cycle, and energizes fault alarm.

4-11. "LAMP FAILURE" Indicator (3, Figure 4-1) illuminates when there is a failure of any lamp within the programmed printing area, automatically shuts down print cycle, and energizes fault alarm.

4-12. "TEMP" Indicator (2, Figure 4-1) illuminates when temperature of discharge air from the printer exceed 32°C rise, automatically shuts down print cycle, and energizes fault alarm.

4-13. "PRESSURE SWITCH" Indicator (1, Figure 4-1). The pressure switch failure indicator is divided into two indicators. The upper half (No. 1) will illuminate when a failure occurs in pressure switch (PS-1) controlling air pressure to the air bag. The lower half (No. 2) will illuminate when a failure occurs in pressure switch (PS-2). When such a failure occurs, print cycle will automatically stop and fault alarm will be energized.

4-14. "EXPOSURE TIMER" (35, Figure 4-1) is a thirty second exposure timer graduated in one-half seconds used to time exposure of the print. The "DODGING OFF" button (33) must be depressed, and will illuminate, when exposure timer is in use.

4-15. "EXPOSURE FACTOR CONTROL" Dial (34, Figure 4-1). The exposure factor control dial is a dual control type of dial. The large dial (Film Type Dial) is used to program the printer to the printing speed of the raw stock being used. The small dial is the exposure "OVERRIDE CONTROL". Turning dial clockwise increases exposure time; counter-clockwise decreases exposure time.. These controls are in the circuit only when "DODGING ON" button (32) has been depressed.

4-16. "DODGING ON" Button (32, Figure 4-1) is depressed for dodging control. The face of the button will illuminate when dodging control circuit is energized. This button is used in conjunction with the "EXPOSURE FACTOR CONTROL" (34).

4-17. "DODGING OFF" Button (33, Figure 4-1) is depressed to program the printer for use with the "EXPOSURE TIMER" (35). Depressing this button breaks "EXPOSURE FACTOR CONTROL" (34) circuit. The face of the button will illuminate to indicate dodging control is "OFF".

4-18. "VIEWING SPEED" Control (26, Figure 4-1) is used to increase or decrease the speed of original film transport across the printing area, for viewing only. This control is operable only when the lower drive assembly is in OUT position with frame advance toggle switch (11, Figure 4-2) in the OFF position.

4-19. "PANEL INTENSITY" Control (21, Figure 4-1) is used to increase or decrease the intensity of the control panel indicator lamps. It is supplied with a switch to turn panel lamps off when control knob is rotated counter-clockwise to stop position. Lamps glow at full intensity when control knob is rotated fully clockwise.

Approved For Release 2005/02/17 : CIA-RDP78B04770A001600030001-2

Approved For Release 2005/02/17 : CIA-RDP78B04770A001600030001-2

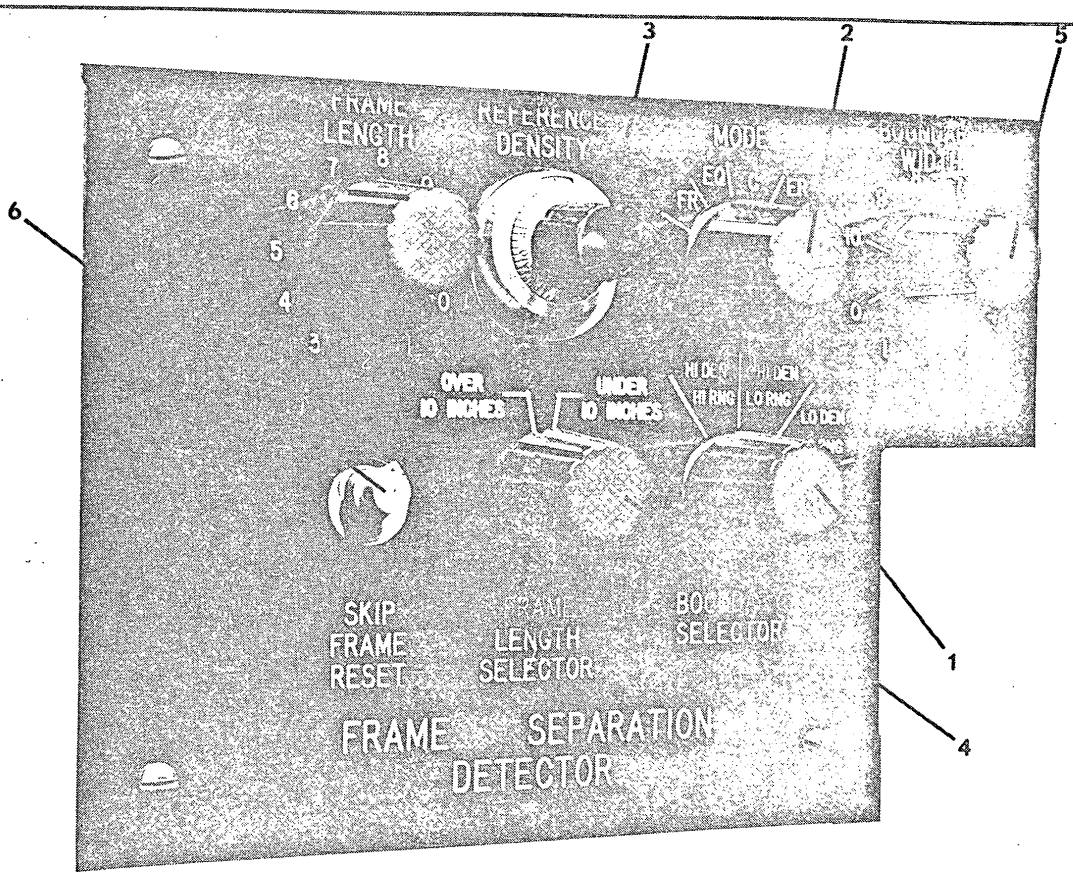

1. Frame Boundary Density Selector Switch
2. Reference Mode Selector Switch
3. Reference Density Control
4. Frame Length Timer Control
5. Boundary Timer Control
6. Skipped Frame Reset Button

Figure 4-0. Frame Separation Detector Control Panel

Approved For Release 2005/02/17 : CIA-RDP78B04770A001600030001-2

Approved For Release 2005/02/17 : CIA-RDP78B04770A001600030001-2

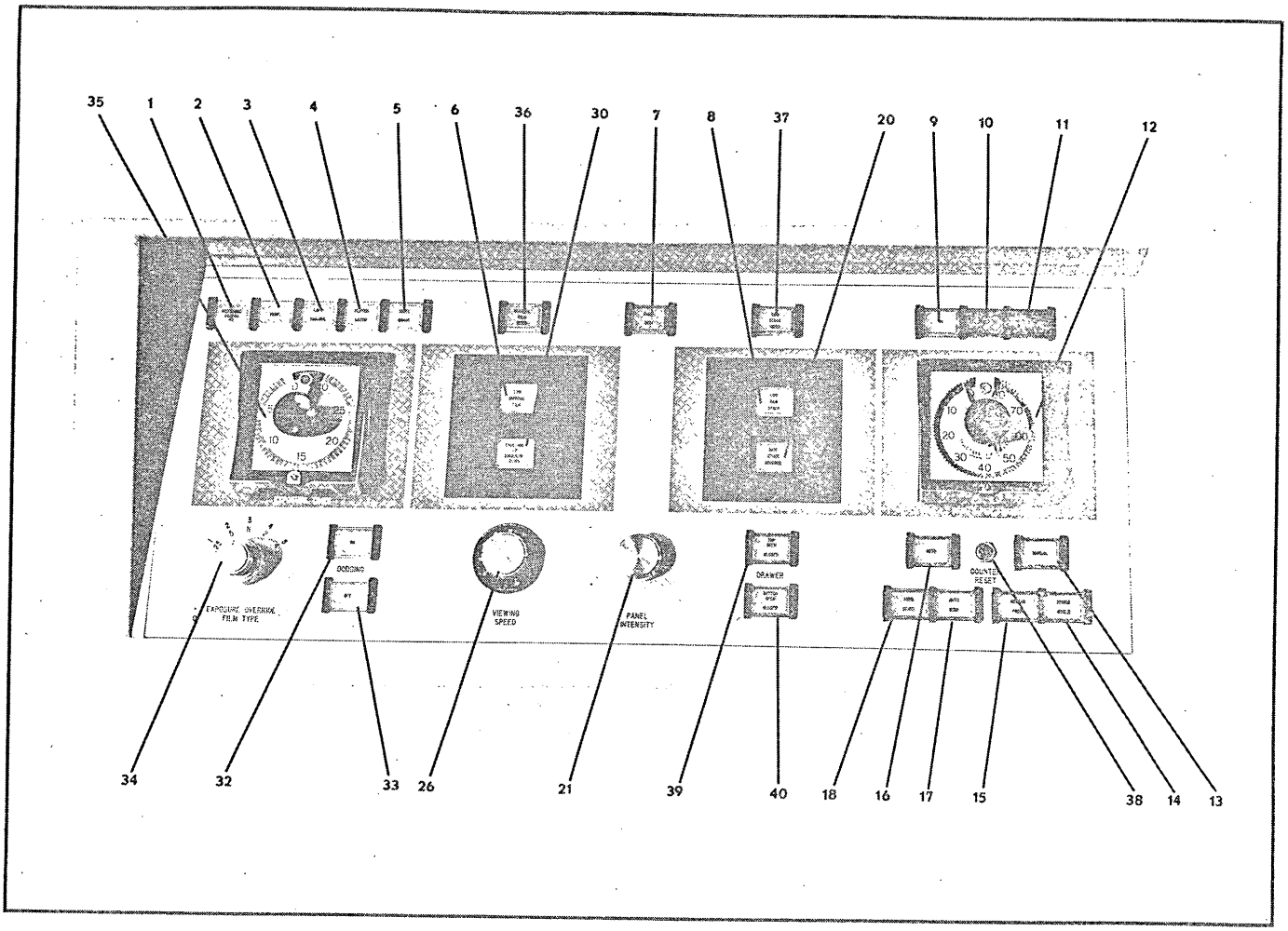

Figure 4-1. Printer Control Panel

Approved For Release 2005/02/17 : CIA-RDP78B04770A001600030001-2

Approved For Release 2005/02/17 : CIA-RDP78B04770A001600030001-2

LEGEND FOR FIGURE 4-1

1 Air Bag Pressure Switch Failure Indicator

2 High Discharge Air Temp. Indicator

3 Exposure Lamp Failure Indicator

4 Platen Not Latched Indicator

5 Film Advance Index Error Indicator

6 Low Original Film Indicator

7 Control Panel Lamps Test Button

8 Low Raw Stock Indicator

9 Main Power Supply On Button

10 Ready For Programming Indicator

11 Main Power Supply Off Button

12 Repeat Prints Per Frame Control

13 Manual Mode Programming Button

14 Single Print Cycle Button

15 Reseau Print Cycle Button

16 Automatic Mode Programming Button

17 Automatic Print Cycle Stop Button

18 Automatic Print Cycle Start Button

19

20 Manual Raw Stock Advance Button

21 Control Panel Lamps Intensity Control

22

23

24

25

26 Viewing Speed Control

27

28

29

30 Film Emulsion Up Or Emulsion Down Programming Button

31

32 Dodging On Programming Button

33 Dodging Off Programming Button

34 Exposure Factor Control Dials

35 Exposure Timer Control

36 Original Film Rider Indicator

37 Raw Stock Rider Indicator

38 Counter Reset Button

39 Top Drive Latch Switch-Drive Latched Open Or Closed

40 Bottom Drive Latch Switch-Drive Latched Open Or Closed

Approved For Release 2005/02/17 : CIA-RDP78B04770A001600030001-2

Approved For Release 2005/02/17 : CIA-RDP78B04770A001600030001-2

4-20. "RAW STOCK ADVANCE" Button (20, Figure 4-1), when depressed overrides "RAW STOCK ADVANCE INCREMENT" setting (14, Figure 4-7) and will continuously advance raw stock, at any desired time except during a print cycle, until button is released.

4-21. "ADVANCE INCREMENT" Control (14, Figure 4-7) controls the amount of raw stock to be advanced for each printing frame during all modes of operation.

4-22. "AUTO" Button (16, Figure 4-1) is depressed to program printer for automatic mode of operation. Face of button will illuminate to indicate this mode is programmed.

4-23. "AUTO START" Button (18, Figure 4-1) is depressed to start print cycle in the automatic mode of operation.

4-24. "AUTO STOP" Button (17, Figure 4-1) is depressed to stop print cycle in the automatic mode of operation.

4-25. "MANUAL" Button (13, Figure 4-1) is depressed to program printer for manual mode of operation. Face of button will illuminate to indicate this mode is programmed.

4-26. "RESEAU PRINT" Button (15, Figure 4-1) is depressed to initiate print cycle WITH reseau assembled in printer. This button is used in conjunction with "MANUAL" mode of operation programmed only.

4-27. "SINGLE CYCLE" Button (14, Figure 4-1) is depressed to expose a single print without reseau assembled in printer. This button is used in conjunction with "MANUAL" mode of operation programmed only.

4-28. "PRINTS PER FRAME" Control (12, Figure 4-1) is the control device which is to be set for the number of repeat prints desired. Unit is calibrated from 1 to 80 and is operable only in the automatic mode. The control should be set at 1 for all other modes of operation.

4-29. Film "EMULSION UP" or "EMULSION DOWN" Button (30, Figure 4-1) is a programming push button which is depressed to program printer for original film emulsion positioning. The face of the button will illuminate to indicate emulsion position selector.

NOTE

Programming printer for emulsion "UP" or "DOWN" changes the direction of rotation of the film transport motors.

TABLE 4-1

MODE SELECTION CHART (Frame Separation Detector)

FILM CONDITION	MODE
(A) (D_{max}-D_{min}) of ALL BOUNDARIES IS LESS THAN 0.2 and (B) The average density of the boundaries does not vary significantly from beginning to end of film reel.	COMBINATION
(A) (D_{max}-D_{min}) of ANY BOUNDARY IS GREATER THAN 0.2; (B) The average density of the boundaries does not vary significantly from beginning to end of film reel.	FIXED DENSITY REFERENCE
(A) (D_{max}-D_{min}) of ALL BOUNDARIES IS LESS THAN 0.2; (B) The average density of the boundaries DOES vary significantly from beginning to end of film reel.	EQUALITY
(A) (D_{max}-D_{min}) of ANY BOUNDARY is GREATER than 0.2; (B) The average density of the boundary DOES vary significantly from beginning to end of film reel.	MAY NOT DETECT BOUNDARIES USE METERING MODE OR OPERATE MANUALLY
(A) (D_{max}-D_{min}) of ALL BOUNDARIES IS LESS THAN 0.2; (B) The average density of the boundaries DOES vary significantly from beginning to end of film reel; (C) There IS a uniform edge density and $D_{max} \geq D_{edge} \geq D_{min}$.	

Approved For Release 2005/02/17 : CIA-RDP78B04770A001600030001-2

Approved For Release 2005/02/17 : CIA-RDP78B04770A001600030001-2

4-30. "FRAME ADVANCE" Controls (11 & 12, Figure 4-2) are used in conjunction with the calibration of Frame Separation Detector.

4-30-1. "FRAME ADVANCE TOGGLE SWITCH" (11, Figure 4-2) with the lower drive assembly (4, Figure 1-2) pulled out and the above switch in the "ON" position, the "VIEWING SPEED" control (26, Figure 4-1) becomes inoperative and the original film rider roll (7, Figure 4-9) takes over to control film speed.

4-30-2. "FRAME ADVANCE PUSH BUTTON" (12, Figure 4-2). This button is used to advance original film through the Frame Separation Detector during calibration. The "FRAME ADVANCE TOGGLE SWITCH" must be positioned "ON" to use this control.

4-31. "FRAME BOUNDARY DENSITY" Selector (1, Figure 4-0) switch is a programming control used in conjunction with the "REFERENCE DENSITY" control (3), the "FRAME LENGTH TIMER" control (4), the "BOUNDARY TIMER" control (5), and the "SKIPPED FRAME RESET" button (6). The appropriate boundary density is selected as either (1) low density (i. e., boundaries whose density are less than the average density of the photographic frame); (2) high density, low range (i. e., boundaries whose density are greater than the average density of the photographic frame, but less than 2. 0); and (3) high density, high range (i. e. boundaries whose density are greater than the average density of the photographic frame and greater than 2. 0).

4-32. The "Reference Mode Selector" switch (2, Figure 4-0) is a programming control used to select the mode of operation of the frame boundary detector (see Table 4-1. "Mode Selection Chart"). The four selected positions are:
(1) Fixed density reference. In this position, low density boundaries will be detected when the maximum boundary density is less than a reference density established by the "REFERENCE DENSITY" control (3, Figure 4-0). High density boundaries will be detected when the minimum boundary density is greater than a reference density established by the "REFERENCE DENSITY" control.
(2) Equality. Boundaries will be detected in this mode of operation when the maximum boundary density is within 0. 2 of the minimum boundary density.
(3) Combination. The combination mode utilizes both modes (1) and (2) above simultaneously.
(4) Edge Reference. This mode of operation will permit detection in the same manner as in the equality mode, only the density of the edge is also measured and it must be greater than or equal to D_{min} and less than or equal to D_{max}. This essentially establishes the edge Density as a "reference" density.

4-33. REFERENCE DENSITY CONTROL. This control (3, Figure 4-0) established a reference density when the reference mode selector switch is in any position other than edge reference.

4-34. Frame Length Timer Control. The "FRAME LENGTH TIMER" control (4, Figure 4-0) consists of a 2-position switch mounted on the same shaft as a potentiometer. The switch is used to program for frame lengths of under 9" for one position and over 9" frame lengths for the second position. The potentiometer establishes a reference frame length. The control disables the frame boundary detector circuitry until the last inch of the distance between the consecutive boundaries, and initiates a warning if the film travels a distance greater than a frame length without a boundary being detected. Dial settings to be used with various frame lengths are listed in Table 4-2.

4-35. Boundary Timer Control. This control (5, Figure 4-0) is normally factory set for operation with boundaries greater than 1/4". Other settings may be found to improve detection of extremely narrow, abnormal boundaries.

4-35-1. Skipped Frame Reset Button. In the event of a skipped frame due to failure of detection, the "SKIPPED FRAME RESET" button (6, Figure 4-0) will release the malfunction indication, reset the control logic circuitry, and permit detection of the next frame.

4-36. "VACUUM CHUCK" Switch (1, Figure 4-2) is an on-off type toggle switch which controls the vacuum hold-down of the printing mask.

4-37. "RESEAU CLAMP" Switch (2, Figure 4-2) is a toggle type switch controlling the raise or lower position of the film clamping device for use in reseau printing.

4-38. "LOCATING PINS" Switch (3, Figure 4-2) is a toggle type switch controlling the raise or lower position of the reseau print aligning pins selected for use.

4-39. "RESEAU PIN SETUP" Switches (4, Figure 4-2) are toggle type switches used to select reseau aligning pins to be used in relation to the punched holes of the film being printed. Five pin selection switches are provided and any combination may be used at the discretion of the operator.

4-40. "FILM TRANSPORT" Switch (5, Figure 4-2) is a toggle type switch used to control forward (left-to-right) or reverse (right-to-left) transport of the film across the printing area. Normal transport stop is with switch in "UP" position. Speed of transport is controllable with "VIEWING SPEED" control (26, Figure 4-1) located on control panel. When frame to be printed is aligned in print area, "VIEWING SPEED" control shall be returned to zero.

4-41. "LEAD ROLLER" Switch (6, Figure 4-2) is a toggle type switch used to control raise or lower position of film advance lead roller. Roller shall be in raised position for manual advance of film and in lowered position for printing in "SINGLE CYCLE" and "RESEAU PRINT" mode of operation.

Approved For Release 2005/02/17 : CIA-RDP78B04770A001600030001-2

Approved For Release 2005/02/17 : CIA-RDP78B04770A001600030001-2

TABLE 4-2

FRAME LENGTH TIMER CONTROL CALIBRATION

FRAME LENGTH UNDER 10"	FRAME LENGTH SETTING	FRAME LENGTH OVER 10"
	1	
	2	
	3	
	4	
	5	
	6	
	7	
	8	
	9	
	10	

Approved For Release 2005/02/17 : CIA-RDP78B04770A001600030001-2

Approved For Release 2005/02/17 : CIA-RDP78B04770A001600030001-2

4-42. "VIEWING LIGHT" switch (7, figure 4-2) is an on-off type toggle switch used to control the viewing light for frame positioning on printing area.

4-43. "LAMP TEST" Button (1, figure 4-3) is a press-to-test push button used to test light source lamps for printing "GO" or "NO GO" condition. The "GO" or "NO GO" is indicated by illumination of indicator lights located above "LAMP TEST" button.

CAUTION

This lamp test should be conducted with no raw stock in the machine.

4-44. "GO" Indicator (3, figure 4-3) illuminates when "LAMP TEST" button (1) is depressed and indicates all lamps in the programmed printing area are operable.

4-45. "NO GO" Indicator (2, figure 4-3) illuminates when "LAMP TEST" button (1) is depressed and a lamp failure exists in the programmed printing area. See Section VI for trouble shooting when "NO GO" illuminates.

4-46. LAMP PROGRAMMING VERTICAL SCALE (4, figure 4-3) is calibrated in inches and millemeters and is used to locate the horizontal mask guide (9) for programming lamp switches in relation to the width of film being printed.

4-47. LAMP PROGRAMMING HORIZONTAL SCALE (5, figure 4-3) is calibrated in inches of printing frame length. The scale is used for locating the vertical mask guides (7) for programming lamp switches in relation to the length of frame being printed. The scale is divided into two scales. The upper scale is used for locating vertical mask guides (7) for reseau printing only. This upper scale has the center of the reseau printing area marked. The lower scale is used for locating vertical mask guides (7) for all other printing without reseau and is calibrated from left to right.

NOTE

Positioning of film for reseau printing is about the center of the printing area. Whereas, positioning of film for printing without reseau is from rear left corner of printing area in relation to size of film being printed. For this reason, the horizontal lamp programming scale shall be set for appropriate mode of operation to obtain proper light source pattern.

4-48. LAMP SWITCHES (6, figure 4-3) are toggle type on-off switches used to turn exposure lamps either on or off.

4-49. VERTICAL MASK GUIDES (7, figure 4-3) are guides which are set in relation to film being printed for length of print format. Setting masks exposes lamp switches to be turned on for proper format exposures.

4-50. "ALARM RESET" Button (11, figure 4-3) is used to shut off fault alarm. This reset is operable only after fault is corrected. The fault alarm will sound when a malfunction is indicated by any one of the fault indicator lights located on control panel. For fault correction, see Section VI, trouble shooting.

4-51. "HORIZONTAL MASK GUIDE (9, figure 4-3) is a guide which is set in relation to film width being printed. Setting mask exposes lamp switches to be turned on for proper width exposure.

4-52. PURPOSE AND USE OF PUNCHING STATION OPERATING CONTROLS.

4-53. The punching station operating controls are located on the front of the assembly. Purpose and use of these controls follow.

4-54. LEAD ROLL POSITON CONTROL. (8, 16, figure 4-4) is a lever type actuating handle. Lowering handle to full down and stop position raises the lead roll (2, 6) for film advance across vacuum and viewing table.

CAUTION

To prevent film damage, lead roll (2) shall be in raised position each time film is advanced from left to right and lead roll (6) shall be in raised position each time film is advanced from right to left.

4-55. "MAIN POWER" Switch (14) is an on-off type toggle switch used to control the viewing lamps located in the vacuum table assembly, macroscope illumination lamp, and main power.

4-56. "TABLE VACUUM" Switch (15) is an on-off type foot switch used to actuate the solenoid valves controlling vacuum supply. Vacuum is used to hold film on table during punching operation.

4-56-1. "VACUUM PUMP" Switch (18) is an on-off type switch used to turn vacuum pump "ON".

4-57. MACROSCOPE FOCUS KNOB (5) is used to focus macroscope cross-hairlines with film fiducials for aligning of film before punching.

4-58. TRANSVERSE ALIGNING KNOB (11) is used to adjust front-to-back vacuum table location for aligning film fiducials with macroscope cross-hairlines.

4-59. LONGITUDINAL ALIGNING KNOB (10) is used to adjust left-to-right vacuum table location for aligning film fiducials with macroscope cross-hairlines.

Approved For Release 2005/02/17 : CIA-RDP78B04770A001600030001-2

Approved For Release 2005/02/17 : CIA-RDP78B04770A001600030001-2

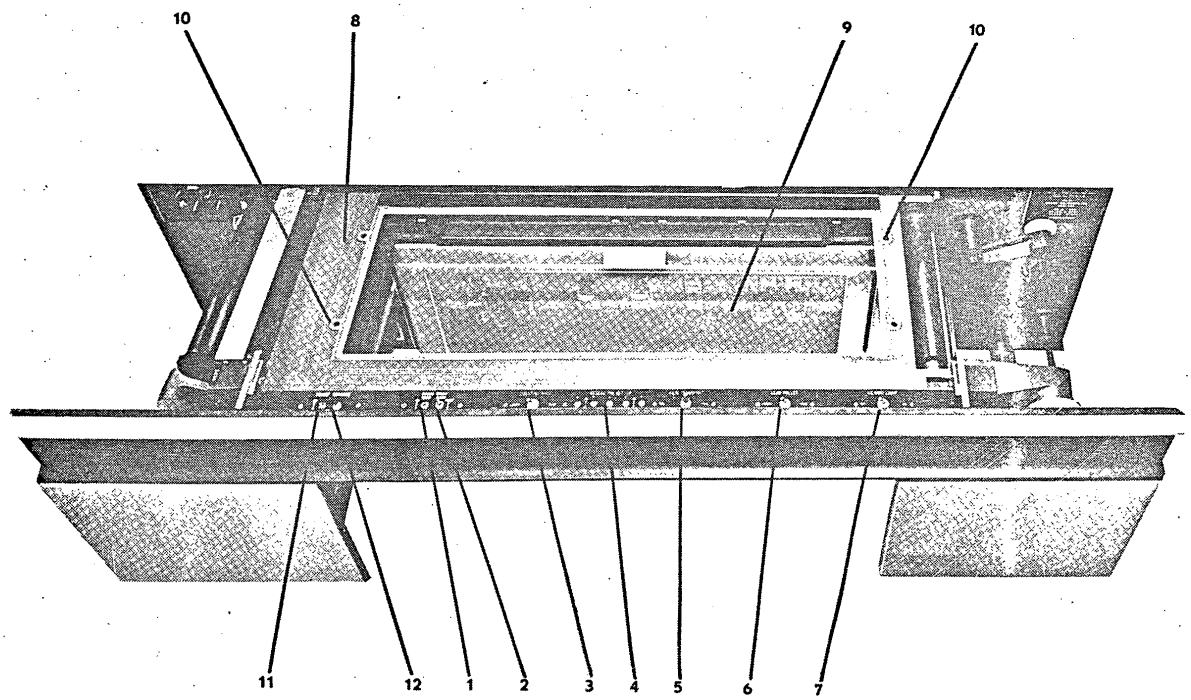

1 Vacuum Chuck Switch
2 Reseau Clamp Switch
3 Film Alignment Locating Pins Switch
4 Reseau Pin Setup Switches
5 Film Transport Switch
6 Lead Roller Control Switch
7 Viewing Light Switch
8 Printing Mask
9 Printing Glass or Reseau Glass
10 Glass Mounting Screws
11 Frame Advance Toggle Switch
12 Frame Advance Push Button

Figure 4-2. Lower Drive Assembly Controls

Approved For Release 2005/02/17 : CIA-RDP78B04770A001600030001-2

Approved For Release 2005/02/17 : CIA-RDP78B04770A001600030001-2

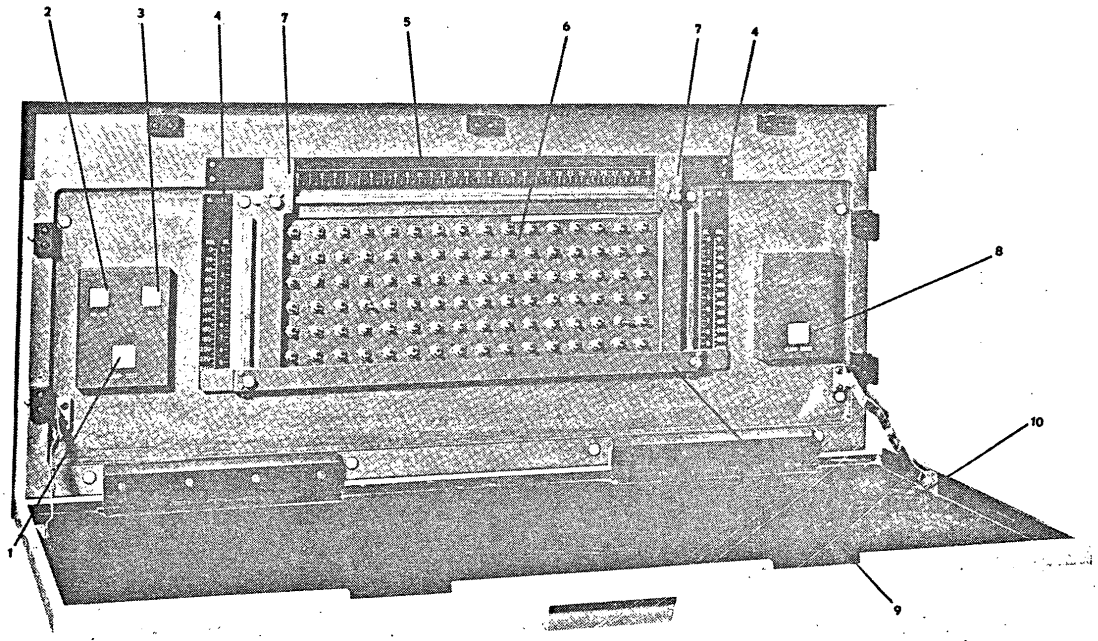

1 Exposure Lamps Test Button

2 Exposure Lamps No Go Indicator

3 Exposure Lamps Go Indicator

4 Lamp Programming Vertical Scales

5 Lamp Programming Horizontal Scale

6 Exposure Lamp Switches

7 Vertical Mask Guides

8 Fault Alarm Reset Button

9 Horizontal Mask Guide

10 Hinged Access Door

Figure 4-3. Exposure Lamp Switch Panel Controls

Approved For Release 2005/02/17 : CIA-RDP78B04770A001600030001-2

Approved For Release 2005/02/17 : CIA-RDP78B04770A001600030001-2

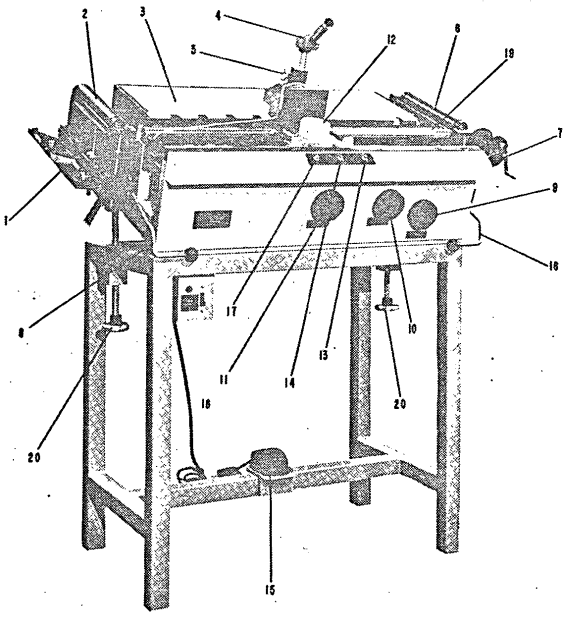

1 LH Film Support
2 Lead Roll
3 Vacuum Table
4 Macroscope
5 Macroscope Focus Knob
6 Lead Roll
7 RH Film Support
8 Lead Roll Position Control Lever
9 Skew Aligning Knob
10 Longitudinal Aligning Knob (right to left)
11 Transverse Aligning Knob (front to back)
12 Punch Carriage Clamp Knob
13 Round Punch Switch
14 Main Power Switch
15 Table Vacuum Foot Switch
16 Lead Roll Position Control Lever
17 Slotted Punch Switch
18 Vacuum Pump Switch
19 Film Chip Tray
20 Jackscrews (table tilting)

Figure 4-4. Punching Station Operating Controls

Approved For Release 2005/02/17 : CIA-RDP78B04770A001600030001-2

Approved For Release 2005/02/17 : CIA-RDP78B04770A001600030001-2

4-60. SKEW ALIGNING KNOB (9) is used to adjust skew of vacuum table by rotating table, around a pivot point, for aligning of film fiducials with macroscope cross-hairlines.

4-61. "ROUND PUNCH" Switch (13) is a momentary push button which is operable at center of table only. It controls solenoid which activates round punch.

4-61-1. "SLOTTED PUNCH" Switch (17) is a momentary push button. It controls solenoid which activates slotted punch.

4-62. OPERATION OF PUNCHING STATION ASSEMBLY.

4-63. PUNCHING STATION FILM LOADING.

4-64. Set film brackets (1, 7, figure 4-4) on each end of station for width of film to be mounted for punching. Mount film supply spool on left-hand film brackets. Mount empty take-up spool on right-hand film brackets and proceed with film loading as follows:

CAUTION

Do not thread film from supply to take-up spool until lead roll (2, 6) has been raised. Do not advance film with lead roll in down position.

a. Raise lead roll (2, 6, figure 4-4) by pushing actuating handle (8, 16) downward to detent stop.

b. Thread film over the top of the left lead roll (2), across vacuum table (3), over the top of right lead roll (6) and attach to take-up spool. Refer to figure 4-5 for threading diagram.

CAUTION

Punch carriage assembly shall be disengaged (clamp knob (12) rotate counter-clockwise) when film is being threaded and advanced.

c. Turn main power switch (14) to "ON" position.

d. Manually center frame to be punched on vacuum table (3) by turning take-up and/or supply spool bracket handles. (A transverse line is provided at center of table.)

e. Raise lead roll actuating handle (8, 16); lowering lead roll (2, 6) and align edge of film with edge of plastic table top.

f. Depress foot switch (15) to "ON".

g. Film is now loaded on station and ready for alignment.

4-65. FILM FIDUCIAL ALIGNMENT

4-66. After film is loaded as described above, align film fiducial prior to punching as follows:

a. Slide punch carriage assembly longitudinally to detented position with the macroscope (4) centered approximately above fiducial mark of frame to be punched. Aligning marks are provided to indicate various detent positions.

b. Engage carriage assembly with vacuum table (3) by rotating clamp knob (12) clockwise and moving carriage manually until detent pin seats in detents and clamp knob (12) locks carriage securely to vacuum table (3).

c. View fiducial on film through macroscope (4). Focus by turning focusing knob (5).

d. Align fiducial with macroscope cross-hairlines with transverse aligning knob (11), longitudinal aligning knob (10), and skew aligning knob (9).

e. Film is now aligned and ready for punching.

4-67. FILM PUNCHING.

4-68. After film has been accurately aligned; punch film as follows:

a. Depress round hole push button (13).

b. If frame length is relatively short, depress slotted hole push button.

c. If frame length is relatively long, determine location for last end slot desired; disengage macroscope carriage assembly, move to detented position for end slot, and engage macroscope carriage assembly.

d. Align frame edge with longitudinal macroscope cross-hair by manipulating skew aligning knob (9).

e. After having satisfactorially aligned film, depress slotted hole push button (17).

f. Disengage macroscope carriage, move to detent position for next desired slotted hole and depress slotted hole push button (17).

g. Repeat step f until all desired slotted holes have been punched.

4-68-1. After all desired holes have been punched, depress "TABLE VACUUM" Foot Switch to "OFF" position and proceed with frame selection and punching as follows:

a. Raise lead roll (2, 6, figure 4-4) by pushing actuating handle (8, 16) downward to detent stop.

b. Repeat steps 4-64d through 4-68g.

Approved For Release 2005/02/17 : CIA-RDP78B04770A001600030001-2

Approved For Release 2005/02/17 : CIA-RDP78B04770A001600030001-2

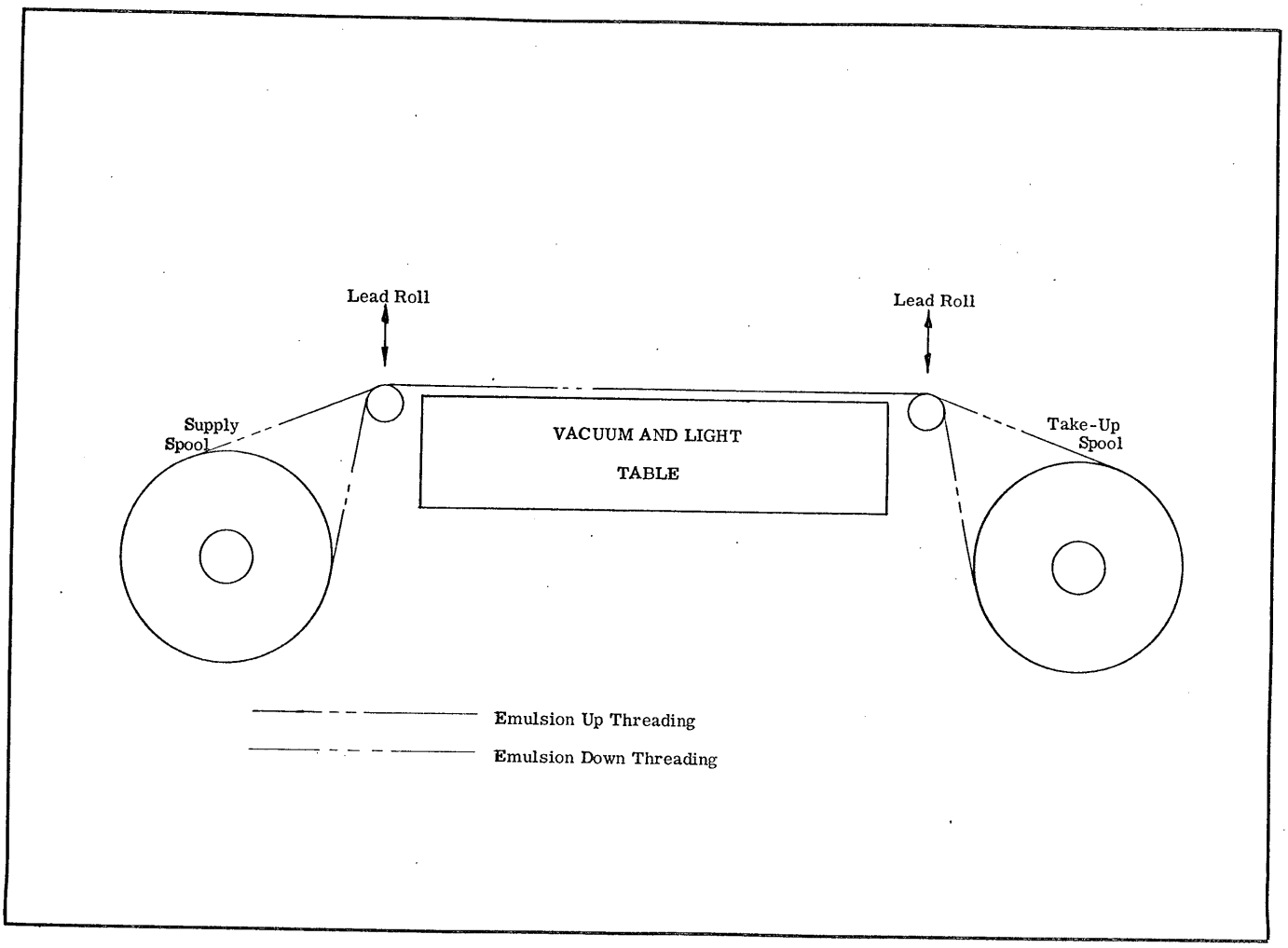

Figure 4-5. Punching Station Film Threading

Approved For Release 2005/02/17 : CIA-RDP78B04770A001600030001-2

Approved For Release 2005/02/17 : CIA-RDP78B04770A001600030001-2

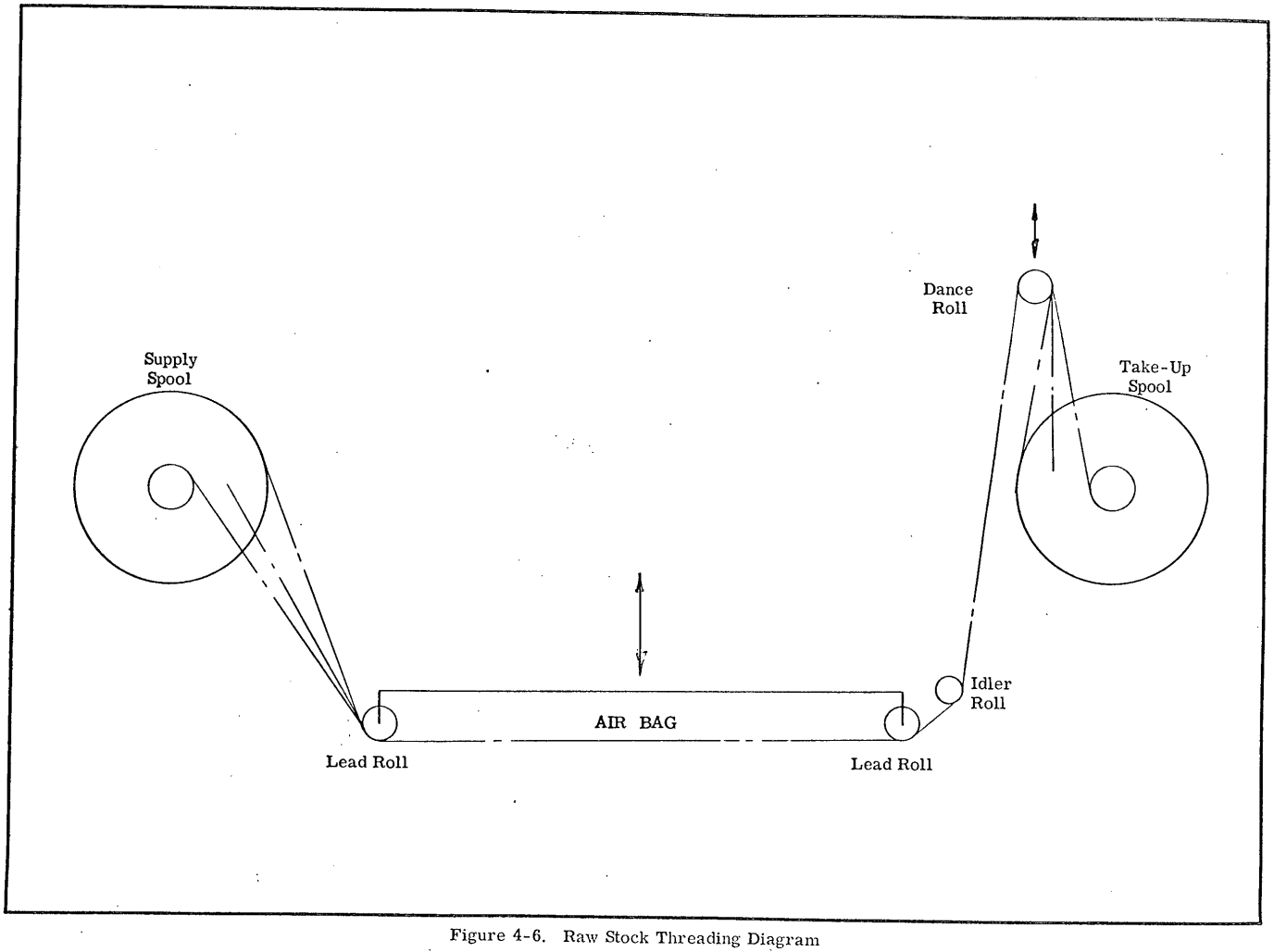

Figure 4-6. Raw Stock Threading Diagram

Approved For Release 2005/02/17 : CIA-RDP78B04770A001600030001-2

Approved For Release 2005/02/17 : CIA-RDP78B04770A001600030001-2

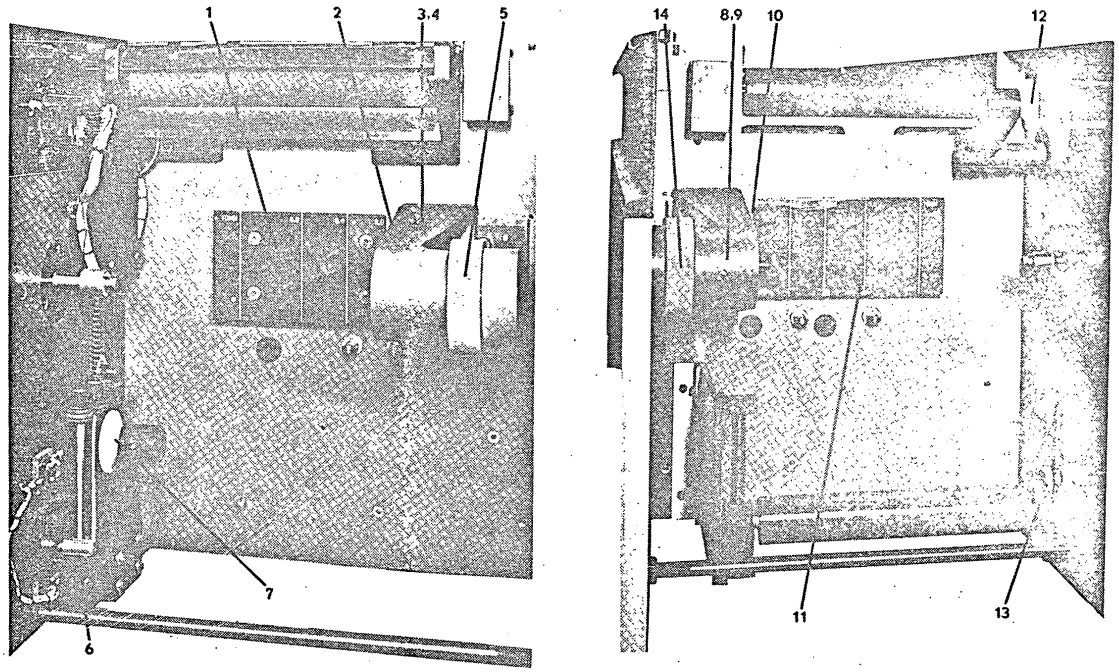

1 Latch Knob
2 Raw Stock Metering Roll
3 LH Film Support
4 Film Support Thumb Screw
5 Graduated Mounting Plate, LH
6 Graduated Mounting Plate, RH
7 Aligning Indicator
8 Rider Roll
9 Rider Roll Latch Knob
10 RH Rilm Support Handle
11 RH Film Support
12 Film Support Thumb Screw
13 LH Film Support Handle
14 Raw Stock Advance Increment

Figure 4-7. Raw Stock Loading

Approved For Release 2005/02/17 : CIA-RDP78B04770A001600030001-2

Approved For Release 2005/02/17 : CIA-RDP78B04770A001600030001-2

4-68-2. Vacuum film chips produced by punching film from film chip tray (19, figure 4-2) below film edge as required.

4-69. PUNCHING STATION FILM REMOVAL.

4-70. After film has been properly punched, unload film as follows:

a. Release punch carriage assembly by rotating clamp knob (12) counter-clockwise; releasing lock pins from vacuum table detents.

b. Depress vacuum table foot switch(15)to "OFF".

c. Push lead roll actuating handle (8,16) downward to stop; raising lead roll (2,6).

d. Detach film from supply spool and remove spools from punching station.

e. Turn main power switch (14) to "OFF" position.

4-71. OPERATION OF PRINTER.

4-72. PRINTER FILM LOADING.

4-73. RAW STOCK. Raw stock shall be loaded under photographic "dark-room" conditions only. Refer to figure 4-6 for raw stock threading diagram. Load printer with raw stock in following sequence.

a. With main power "ON", depress top drawer open button (39, figure 4-1) and out to stop position.

b. Loosen thumb screws (4,12, figure 4-7) and set spool supports (3,11)on graduated mounting plates (5, 6) aligning indicators (7) with marking for width of raw stock being loaded. Tighten thumb screws (4,12). Proper setting of right spool support (11) automatically programs the printer for required transport clutch voltage in relation to raw stock width.

c. Make certain rider roll latch knob (9) is engaged. Raise rider roll (8) to detent stop.

d. Make certain metering roll latch knob (1) is engaged. Raise raw stock metering roll to detent stop.

e. Rotate spool support handles (10,13) to retract spool support shafts.

f. Mount raw stock supply on left spool support (3) and rotate support handle (13) to detent stop. Refer to figure 4-6 for stock lead off spool position.

g. Mount take-up on right spool support (11) and rotate handle (10) to detent stop.

h. Thread stock in accordance with figure 4-6.

i. Disengage metering roll latch (1) by pulling outward and rotating 90°. Carefully lower metering roll (2) onto raw stock supply.

j. Disengage rider roll latch (9) by pulling outward and rotating 90°.

k. Depress top drawer closed button and push upper drive assembly (1, figure 1-2) back into machine.

NOTE

Until metering roll (2, figure 4-7) and rider roll (8, figure 4-7) are lowered onto raw stock supply, "RAW STOCK RIDER" fault indicator (8, figure 4-1) will illuminate.

4-74. ORIGINAL FILM. Original film may be loaded under "daylight" conditions. Refer to figure 4-8 for threading diagram. Load printer with original film in the following sequence.

a. With main power "ON" depress lower drawer open button (40, figure 4-1) and pull lower drive assembly out to stop position.

b. Loosen thumb screws (4,8, figure 4-9) and set spool supports (3,9) on graduated mounting plates (1,11) aligning indicators (2,10) with marking for width of film being loaded. Tighten thumb screws (4-8). Proper setting of the spool supports automatically programs the printer for required transport clutch voltage and negative line detector scanning in relation to film width.

c. Make certain rider roll latch knobs (6,13) are engaged. Lower film rider rolls (7,12) to detent stop.

d. Rotate spool support handles (5,14) to detented position to retract spool support shafts.

e. Mount film supply spool on left spool support (3) and rotate handle (5) to detent stop. Refer to figure 4-8 for film lead off spool position, emulsion up or down, as required.

f. Lay appropriate printing mask over the printing plane.

g. Mount film take-up spool on right spool support (9) and rotate handle (14) to detent stop.

h. Thread film in accordance with figure 4-8.

i. Disengage rider roll latch knob (6) by pulling outward and pressing down 90°. This will allow rider rolls (7,12) to seat on the film border.

Approved For Release 2005/02/17 : CIA-RDP78B04770A001600030001-2

Approved For Release 2005/02/17 : CIA-RDP78B04770A001600030001-2

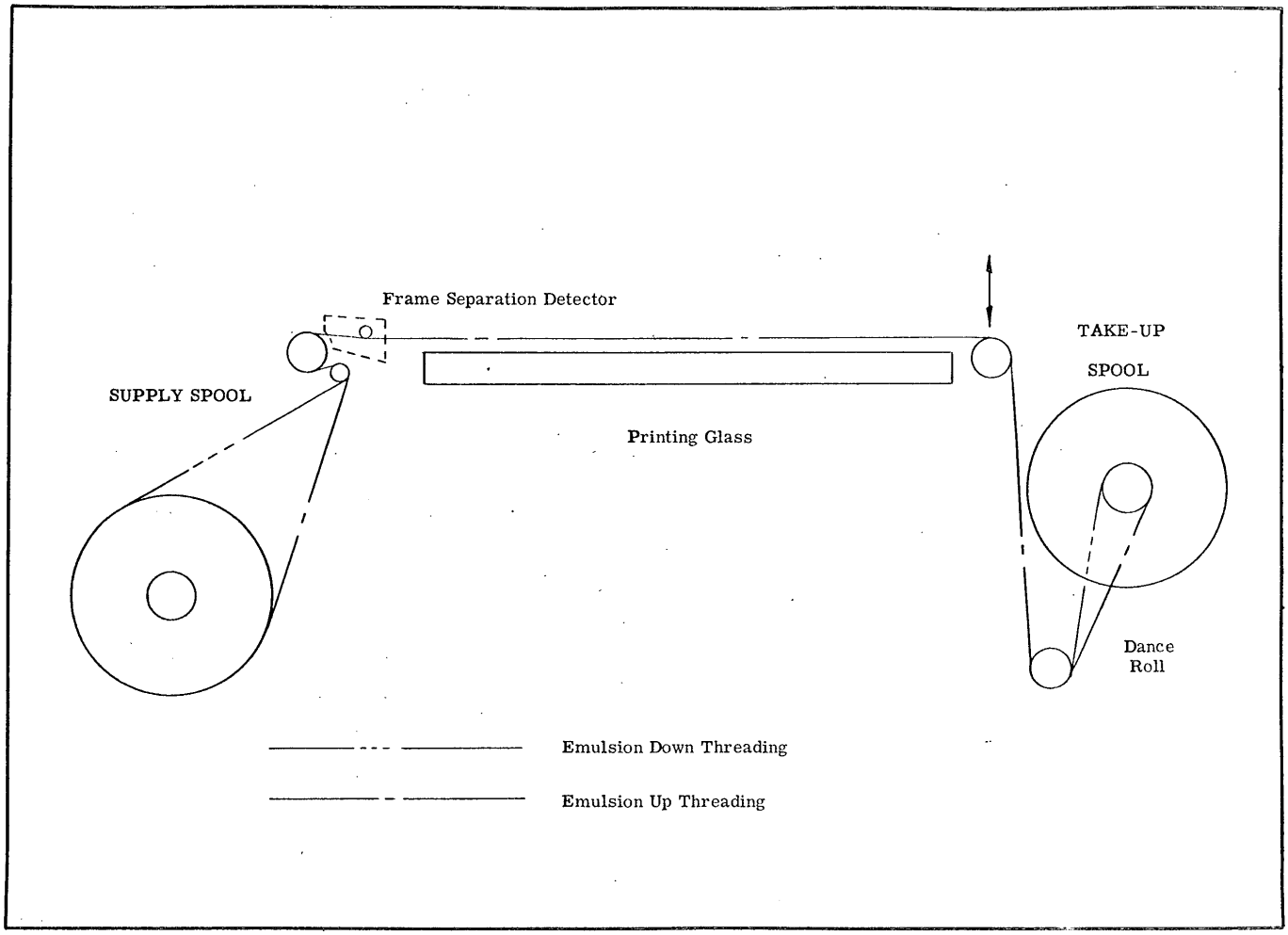

Figure 4-8. Original Film Threading

Approved For Release 2005/02/17 : CIA-RDP78B04770A001600030001-2

Approved For Release 2005/02/17 : CIA-RDP78B04770A001600030001-2

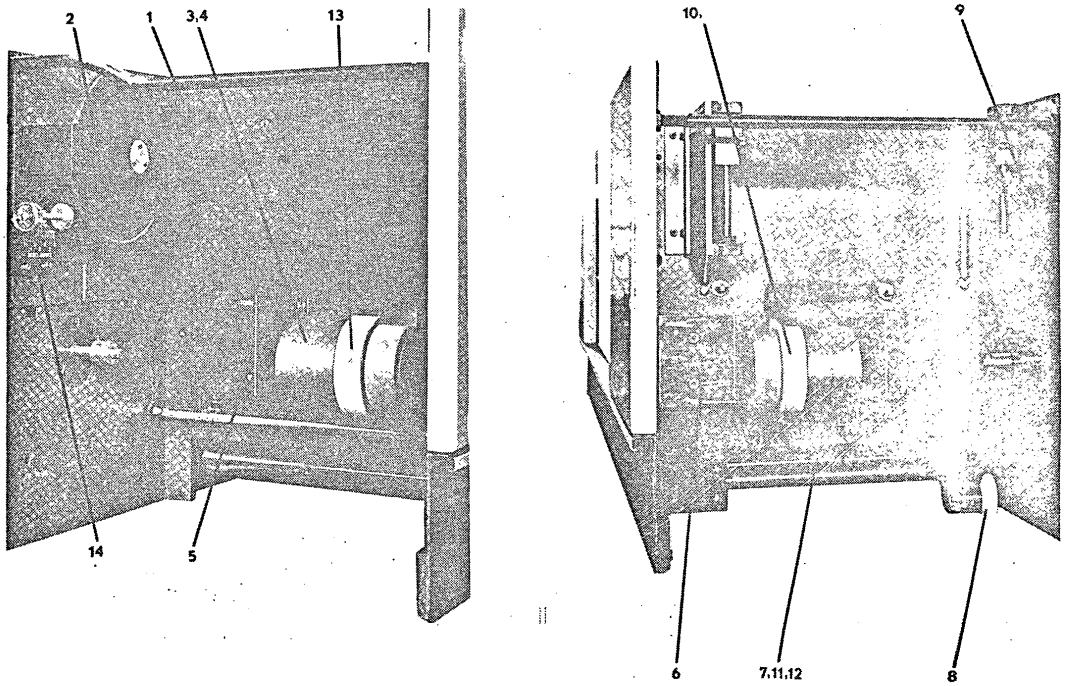

1 Graduated Mounting Plate, LH
2 Aligning Indicator
3 LH Film Support
4 Film Support Thumb Screw
5 LH Film Support Handle
6 Rider Roll Latch Knob
7 LH Rider Roll
8 Film Support Thumb Screw
9 RH Film Support
10 Aligning Indicator
11 Graduated Mounting Plate, RH
12 RH Rider Roll
13 Rider Roll Latch Knob
14 RH Film Support Handle

Figure 4-9. Original Film Loading Procedure

Approved For Release 2005/02/17 : CIA-RDP78B04770A001600030001-2

Approved For Release 2005/02/17 : CIA-RDP78B04770A001600030001-2

NOTE

Until rider rolls (7, 12) are lowered to ride on film, "ORIGINAL FILM RIDER" fault indicator (6, figure 4-1) will illuminate.

j. Make certain "LEAD ROLLER" switch (6, figure 4-2) is in "RAISE" position.

l. Turn "VACUUM CHUCK" switch (1, figure 4-2) to "ON" position. Make certain mask is seated properly.

m. Push "LINE DETECTOR" button (27, figure 4-1) to "OFF" position.

n. Turn "VIEWING LIGHT" switch (7, figure 4-2) to "ON" position.

o. Actuate "FILM TRANSPORT" switch (5, figure 4-2) to "FWD" for left-to-right transport of film across printing plane. Adjust transport speed with "VIEWING SPEED" control (26, figure 4-1). Stop transporting when film frame is approximately over printing area. Turn "VIEWING SPEED" control to "SLOW" position.

p. Actuate "LEAD ROLLER" switch (6, figure 4-2) to "LOWER" position.

q. Align film frame over printing area by jogging with "FILM TRANSPORT" switch (5, figure 4-2), "FWD" for left-to-right, "REV" for right-to-left transport.

CAUTION

Do not transport film, other than jogging, with lead roller in lowered position. Do not jog film at high speed, as film damage may occur.

r. Actuate "LEAD ROLLER" switch (6, figure 4-2) to "RAISE" position.

s. Push lower drive assembly back into machine.

4-75. PROGRAMMING.

4-76. GENERAL PROGRAMMING RELATIVE TO ALL MODES OF OPERATION WITHOUT RESEAU.

4-77. General programming is performed in following sequence.

a. With main power "ON", open hinged door (10, figure 4-3) to gain access to lamp switch panel.

b. Set left vertical mask guide (7) at zero and right vertical mask guide for length of print format. Make setting to lower graduations of horizontal scale (5). Scale is graduated in inches of format length.

c. Set horizontal mask guide (9) for width of original film loaded in printer. Make setting on vertical scale (4). Scale is graduated in inches and millimeters of film width.

d. Switch on all programming lamp switches (6) within the masked area made by vertical and horizontal mask guides (7 and 9).

e. Set "FRAME BOUNDARY DENSITY" selector switch (1, figure 4-0) to the appropriate position as described in paragraph 4-3.

f. Select mode of boundary detection by operating the "REFERENCE MODE" selector switch (2, figure 4-0) in accordance with the "MODE SELECTION CHART", Table 4-1.

g. If reference mode has not been selected, adjust the Reference Density Control according to Table 4-3.

h. Adjust the Frame Length Timer control (4, figure 4-0) in accordance with the frame length to be printed. (Frame Length Timer Control Settings, Table 4-2).

i. Depress dodging "OFF" button (33), figure 4-1).

j. Depress film emulsion "UP" or "DOWN" button (30 or 31, figure 4-1) as required in relation to threading of film in printer.

k. Set "ADVANCE INCREMENT" control (14, figure 4-7) for length of raw stock to be advanced per print cycle.

4-78. AUTOMATIC MODE OF OPERATION PROGRAMMING, WITHOUT DODGING.

4-79. Perform general programming as described in paragraph 4-76, then program for automatic operation as follows:

a. Depress "AUTO" button (16, figure 4-1).

b. Set "EXPOSURE TIMER" control (35) for the desired exposure duration in seconds. Timer has automatic reset and will return to setting for next exposure.

c. Set "PRINT PER FRAME" control (12, figure 4-1) for desired number of repeat prints. If repeat prints are not desired, control shall remain set at 1.

d. Depress "AUTO START" button (18, figure 4-1). For the first print after starting this operation, raw stock only will advance. After first print is exposed, both raw stock and original film will automatically advance.

e. The following print cycle takes place, in sequence, after "AUTO START" button (18, figure 4-1) is depressed.

Approved For Release 2005/02/17 : CIA-RDP78B04770A001600030001-2

Approved For Release 2005/02/17 : CIA-RDP78B04770A001600030001-2

REFERENCE DENSITY				
BOUNDARY DENSITY	REFERENCE DENSITY SETTING FOR DETECTION			
	Lo Den Lo Range	Hi Den Lo Range	Hi Den Hi Range	
0	7.51			
0.1	5.96			
0.2	4.97			
0.3	3.27			
0.4	2.24			
0.5	1.81	5.38		
0.6	1.33			
0.8	0.88	3.17		
0.9	0.49			
1.0		2.18		
1.2		1.94		
1.4		1.73		
1.6			9.04	
1.8			6.33	
2.0			4.65	
2.2			3.64	
2.4			2.89	
2.6			2.16	
2.8			1.93	
3.0			1.83	
3.2			1.68	

TABLE 4-3

REFERENCE DENSITY CONTROL

Approved For Release 2005/02/17 : CIA-RDP78B04770A001600030001-2

Approved For Release 2005/02/17 : CIA-RDP78B04770A001600030001-2

1. Raw stock will advance the amount set on "ADVANCE INCREMENT" control.

2. Platen assembly will unlatch, lower, and latch in down position.

3. Air bag component of platen assembly will fill with air. When filled, exposure light pulse is initiated and exposure takes place.

4. When last exposure lamp goes out, air is drawn out of air bag.

5. After a preset time delay, platen assembly will unlatch, raise, and latch in up position.

6. When platen latches in up position, both raw stock and original film advance clutches are energized and both raw stock and film will advance to next frame and stop. If "PRINTS PER FRAME" control has been set for repeat prints, raw stock advance clutch only will be energized until last repeat print has been exposed. Then, control will automatically reset for number of repeat prints formerly set, film will advance, and repeat print cycle will begin for next frame.

7. Printer will operate continuously until either original film or raw stock is depleted, or, "AUTO STOP" button (17, figure 4-1) is depressed.

4-80. AUTOMATIC MODE OF OPERATION PROGRAMMING, WITH DODGING.

4-81. Perform general programming as described in paragraph 4-76 except step i dodging "ON" button (32, figure 4-1) shall be depressed instead of dodging "OFF" button (33). This programs "EXPOSURE FACTOR" control dial (34) into circuit, partially overriding "EXPOSURE TIMER" (35). Proceed with programming as follows:

a. Set "EXPOSURE FACTOR" control (34) large outer dial for printing speed of raw stock being used. Set small inner dial for exposure time desired.

b. Perform automatic mode programming steps described in paragraph 4-79a through 4-79e except step b shall be omitted and paragraph 4-81c shall be substituted in its place.

c. Set the "EXPOSURE TIMER" control (35) at thirty (30) seconds to provide a time limiting device in the case of extremely dense negatives. The light dodge system will be allowed thirty (30) seconds of operation and if all lamps have not been timed out, the "EXPOSURE TIMER" will override light dodge circuitry and continue with programmed cycle.

NOTE

Maximum operating time for light dodge system is always determined by "EXPOSURE TIMER" setting.

4-82. MANUAL MODE OF OPERATION, SINGLE CYCLE, WITHOUT DODGING.

4-83. Perform general programming as described in paragraph 4-76. Then, proceed with manual mode, single cycle, without dodging, programming as follows:

a. Depress "MANUAL" button (13, figure 4-1).

b. Set "EXPOSURE TIMER" control (35) for desired exposure duration in seconds. Timer has automatic reset and will return to setting for next exposure.

c. Set "PRINTS PER FRAME" control (12) on 1.

d. Depress "SINGLE CYCLE" button (14).

e. The following print cycle takes place in sequence, after "SINGLE CYCLE" button (14, is depressed.

1. Raw stock will advance the amount set on "ADVANCE INCREMENT" control (19).

2. Platen assembly will unlatch, lower, and latch in down position.

3. Air bag component of platen assembly will fill with air. When filled, exposure light pulse is initiated and exposure takes place.

4. When last exposure lamp goes out, air is drawn out of air bag.

5. After a preset time delay, platen assembly will unlatch, raise, and latch in up position and printer will stop.

4-84. MANUAL MODE OF OPERATION, SINGLE CYCLE, WITH DODGING.

4-85. Perform general programming as described in paragraph 4-76, except step i dodging "ON" button (32, figure 4-1) shall be depressed instead of dodging "OFF" button (33). This programs "EXPOSURE FACTOR" control dial (34) into circuit, overriding "EXPOSURE TIMER" (35). Proceed with programming as follows:

a. Set "EXPOSURE FACTOR" control dial (34) outer dial for printing speed of raw stock being used. Set inner dial for exposure time desired.

Approved For Release 2005/02/17 : CIA-RDP78B04770A001600030001-2

Approved For Release 2005/02/17 : CIA-RDP78B04770A001600030001-2

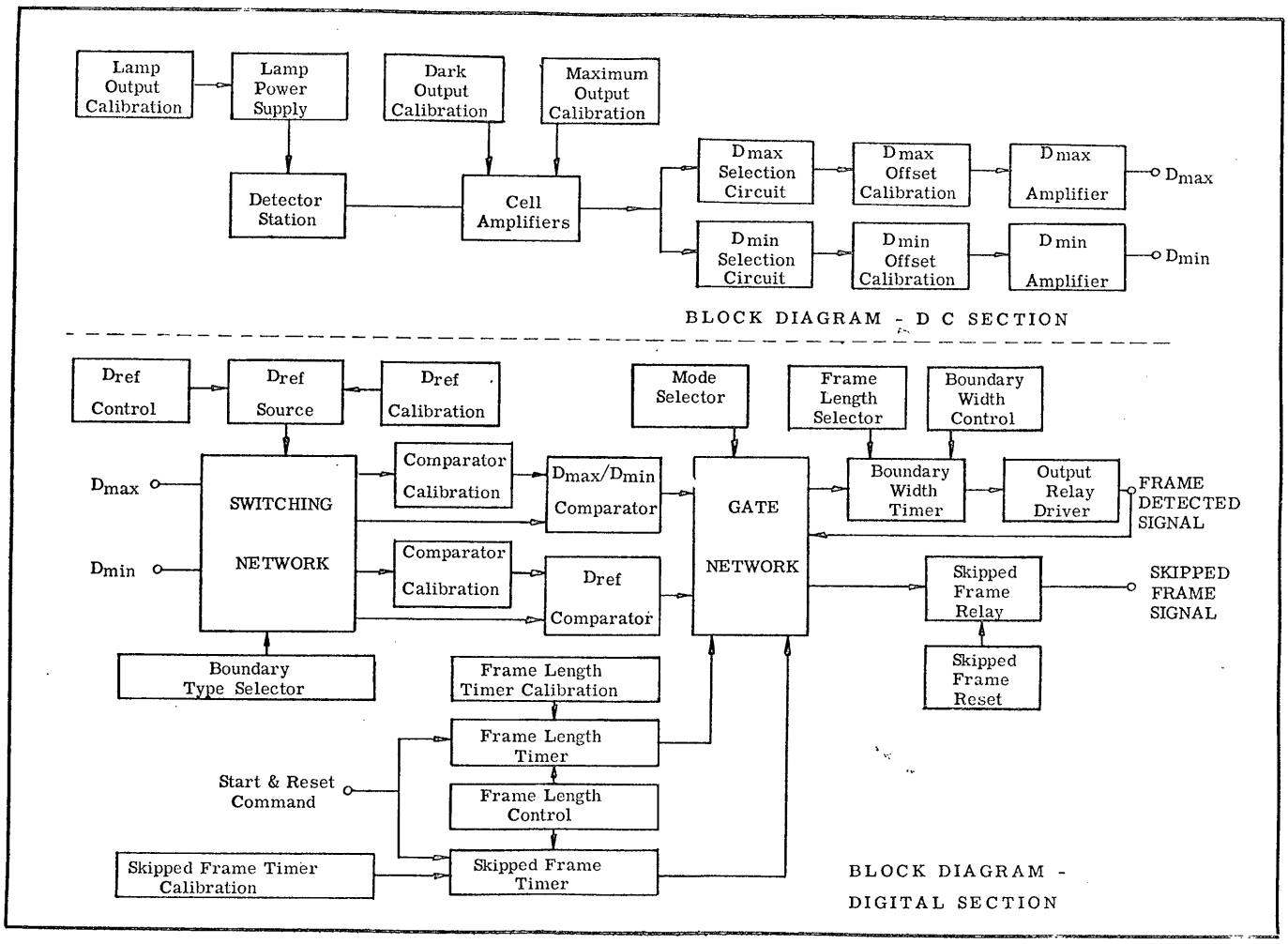

Table 4-4. Frame Separation Detector Block Diagram

Approved For Release 2005/02/17 : CIA-RDP78B04770A001600030001-2

Approved For Release 2005/02/17 : CIA-RDP78B04770A001600030001-2

b. Perform manual mode programming steps described in paragraph 4-83a thorugh 4-83e, except step b shall be omitted and paragraph 4-81c shall be substituted in its place.

4-86. RESEAU PRINTING.

4-87. RESEAU PRINTING SETUP.

4-88. Initial setup of machine for reseau printing shall be accomplished with no film, original or raw stock, in the machine. Setup of unit for reseau printing shall be in the following sequence.

a. With main power "ON", depress lower drawer open button (40, figure 4-1) and pull lower drive assembly (4, figure 1-2) out to stop position. After pulling lower drive assembly out, turn main power "OFF".

b. Turn "VACUUM CHUCK" Switch (1, figure 4-2) to "OFF", "RESEAU CLAMP" switch (2) to "RAISE", "LOCATING PINS" switch (3) to "LOWER", "RESEAU PIN SETUP" switches (4) to "OFF", "LEAD ROLLER" switch (6) to "RAISE", "VIEWING LIGHT" switch (7) to "OFF".

c. Remove any printing mask (8, figure 4-2) which may be on printing plate.

d. Remove the four screws (10) securing printing glass up and out of printer.

NOTE

Handles may be left on printing glass (9) for ease of handling.

CAUTION

Store printing glass (9) in an area where breakage will not occur.

e. Manually position the two reseau clamp cylinder actuating levers, located in rear corners of printing glass opening, to vertical position.

f. Manually position reseau clamp, located on rear of reseau printing glass, with levers in vertical position.

g. Install reseau printing glass in printing plane opening by carefully lowering into position engaging clamp levers of reseau clamp with clamp cylinder actuating levers.

h. Remove reseau handles and secure reseau printing glass in position with four screws removed in step d.

i. Turn main power "ON", depress lower drawer closed button (40, figure 4-1) and push lower drive assembly back into closed position after pushing lower drive assembly back into closed position, depress main power "OFF" button.

j. Printer is now ready for reseau print programming.

4-89. PROGRAMMING FOR RESEAU PRINTING WITHOUT DODGING.

4-90. With main power "OFF", programming for reseau printing shall be in the following sequence.

a. Open hinged door (10, figure 4-3) exposing exposure lamp switches (6). Turn all switches "OFF".

b. Set vertical mask guides (7) for format length to be printed. Use upper scale of horizontal scale (5) which is graduated left and right from center in inches of reseau print format.

c. Set horizontal mask guide (9) for width of original film to be printed.

d. Turn lamp switches (6) within the masked area to "ON" position.

e. Close hinged door (10).

f. Load printer with raw stock in accordance with paragraph 4-73.

g. Load printer with original film to be duplicated in accordance with paragraphs 7-74a through 4-74q.

h. Manually position film, aligning film punched holes as close as possible over locating pins.

i. Select desired locating pins to be used by switching "RESEAU PIN SETUP" switches (4, figure 4-2) to "ON" position.

j. Raise locating pins by actuating "LOCATING PINS" switch (3, figure 4-2) to "RAISE" position. Pins will engage with film punched holes accurately aligning film with reseau.

k. Actuate "RESEAU CLAMP" switch (2) to "LOWER" position. Film will be securely clamped in located position.

l. Actuate "LOCATING PINS" switch (2) to "LOWER" position.

m. Depress lower drawer closed switch (40, figure 4-1) and push lower drive assembly back into closed position.

n. Depress dodging "OFF" button (33, figure 4-1).

Approved For Release 2005/02/17 : CIA-RDP78B04770A001600030001-2

Approved For Release 2005/02/17 : CIA-RDP78B04770A001600030001-2

o. Depress appropriate "UP" or "DOWN" button (30, 31, figure 4-1) for film emulsion position.

p. Set raw stock "ADVANCE INCREMENT" control (14, figure 4-7) for desired advance in relation to film being printed.

q. Set "PRINTS PER FRAME" control (12) for desired number of repeat prints.

r. Set "EXPOSURE TIMER" (35) for desired exposure duration in seconds.

4-91. RESEAU PRINTING OPERATION.

4-92. After programming per paragraph 4-89, printing operation is performed in the following sequence.

a. Depress "MANUAL" button (13, figure 4-1).

b. Depress "RESEAU PRINT" button (15). The following reseau print cycle will take place in sequence.

1. Raw stock will advance the amount set on "ADVANCE INCREMENT" control (14, figure 4-7).

2. Platen assembly will unlatch, lower, and latch in down position.

3. Air bag component of platen assembly will fill with air. When filled, exposure light pulse is initiated and exposure takes place.

4. When last exposure lamp goes out, air is drawn out of air bag.

5. After preset time delay, platen assembly will unlatch, raise, and latch in up position and printer will stop.

c. Depress lower drawer open button (40, figure 4-1) and open lower drive assembly.

d. Actuate "RESEAU CLAMP" switch (2, figure 4-2) to "RAISE".

e. Actuate "LEAD ROLLER" switch (6) to "RAISE".

f. Transport film to next frame by actuating "FILM TRANSPORT" switch (5). Speed of transport will be controlled with "VIEWING SPEED" control (26, figure 4-1); it is recommended that this advance be made at low speed.

g. Actuate "LEAD ROLLER" switch (6, figure 4-2) to "LOWER".

h. Manually position film, aligning film punched holes as close as possible over locating pins.

i. Actuate "LOCATING PINS" switch (3) to "RAISE".

j. Actuate "RESEAU CLAMP" switch (2) to "LOWER".

k. Actuate "LOCATING PINS" switch (3) to "LOWER".

l. Depress lower drawer closed button (40, figure 4-1) and close lower drive assembly.

m. Depress "RESEAU PRINT" button (15, figure 4-1). Printing sequence described in paragraph 4-92b will repeat.

n. For subsequent frame printing, repeat operating procedures of paragraph 4-92c through 92m.

4-93. PROGRAMMING FOR RESEAU PRINTING, WITH DODGING.

4-94. Program printer as described in paragraphs 4-90a through 4-90q, except delete steps 4-90n and substitute the following:

a. Depress dodging "ON" button (32, figure 4-1).

b. Set the "EXPOSURE TIMER" control (35, figure 4-1) at thirty (30) seconds to provide a time limiting device in the event of extremely dense negatives. The light dodge system will be allowed thirty (30) seconds of operation and if all lamps have not been timed out, the "EXPOSURE TIMER" will override light dodge circuitry and continue with programmed cycle.

NOTE

Maximum operating time for light dodge system is always determined by "EXPOSURE TIMER" setting.

c. Set "EXPOSURE FACTOR" control (34) large outer dial for printing speed of raw stock being used. Set small inner dial for exposure time desired.

NOTE

Reseau printing operation with dodging is the same as described in paragraphs 4-92a through 4-92n.

4-95. SHUT-DOWN OF PRINTER.

4-96. To shut down printer upon completion of printing in any mode of operation, depress "OFF" button (11), figure 4-1) and hold IN until unit stops.

Approved For Release 2005/02/17 : CIA-RDP78B04770A001600030001-2

Approved For Release 2005/02/17 : CIA-RDP78B04770A001600030001-2

TABLE 5

BOUNDARY WIDTH CONTROL CALIBRATION

BOUNDARY WIDTH	CONTROL SETTING
	0
	1
	2
	3
	4
	5
	6
	7
	8
	9
	10

Approved For Release 2005/02/17 : CIA-RDP78B04770A001600030001-2

Approved For Release 2005/02/17 : CIA-RDP78B04770A001600030001-2

SECTION V
LUBRICATION

5-1. LUBRICATION.

5-2. Lubrication points, type of lubricant, and lubrication intervals are shown in table 5-1.

TABLE 5-1. LUBRICATION

LUBRICATION POINT	LUBRICANT	INTERVAL
RAW STOCK DRIVE MOTOR		1500 Operating hours
RAW STOCK DRIVE CLUTCH		1500 Operating hours
ORIGINAL FILM DRIVE MOTORS (2)		1500 Operating hours
ORIGINAL FILM DRIVE CLUTCHES (2)		1500 Operating hours
AIR CIRCULATING BLOWERS (2)		1500 Operating hours

Approved For Release 2005/02/17 : CIA-RDP78B04770A001600030001-2

Approved For Release 2005/02/17 : CIA-RDP78B04770A001600030001-2

SECTION VI
TROUBLE SHOOTING

6-1. TROUBLE SHOOTING

6-2. Troubles, their probable causes, and possible remedies are listed in Table 6-1.

TABLE 6-1. TROUBLE SHOOTING

TROUBLE	PROBABLE CAUSE	REMEDY
Main power will not come on	Blown fuse	Have technician isolate fault, correct and replace blown fuse.
"LOW RAW STOCK" Indicator Illuminates	Raw stock supply depleted	Reload printer with raw stock. Refer to Para. 4-73.
	Raw stock take-up spool full	Remove full take-up spool and replace with empty spool. Refer to Para. 4-73.
"RAW STOCK RIDER" Indicator Illuminates	Metering roll not lowered onto raw stock supply	Lower metering roll. Refer to Para. 4-73i.
	Raw stock take-up rider roll not on raw stock	Release rider roll. Refer to Para. 4-73J.
"LOW ORIGINAL FILM" Indicator Illuminates	Original film supply depleted	Reload printer with film. Refer to Para. 4-74.
	Original film take-up spool full	Remove full take-up spool and replace with empty spool. Refer to Para. 4-74.
"ORIGINAL FILM RIDER" Indicator Illuminates	Original film rider roll not on film	Release rider roll. Refer to Para. 4-74i.
Fault Alarm sounds; "INDEX ERROR" Indicator Illuminates	Frame line detector "OFF". Operable in Automatic mode only	Turn line detector "ON". (27, figure 4-1).
	Skipped frame in Automatic mode	Poor frame boundary. Incorrect frame boundary controls settings. See Para. 4-31 through 4-36.

Approved For Release 2005/02/17 : CIA-RDP78B04770A001600030001-2

Approved For Release 2005/02/17 : CIA-RDP78B04770A001600030001-2

TABLE 6-1. TROUBLE SHOOTING (CONT)

TROUBLE	PROBABLE CAUSE	REMEDY
"INDEX ERROR" (CONT.) (skipped frame)	Fixed Reference-Edge Reference (2, figure 4-0) improperly set	Correct. Refer to Para. 4-77f.
	Density Reference potentiometers (3, figure 4-0) improperly set	Correct. Refer to Para. 4-77g.
	Frame Boundary Density (1, figure 4-0) improperly set	Correct. Refer to Para. 4-77c.
	Frame Length Timer	Correct. Refer to Para. 4-77h.
False Frame Detections. (Detected when prints are developed.	Boundary timer control (5, figure 4-0) improperly set	Refer trouble to technician.
Fault Alarm sounds; "PLATEN LATCH" indicator illuminates	Platen not latched down position	Refer trouble to technician.
	Faulty platen latch air cylinder and/or solenoid valve	
	Defective latch mechanism	
Fault Alarm sounds; "LAMP FAILURE" indicator illuminates	Exposure lamp burned out	Have technician replace exposure lamp and rebalance. Refer to Para. 6-3.
Fault Alarm sounds; "TEMP" indicator illuminates	Discharge air from printer exceeds 32° C rise. Printer overheating.	Refer trouble to technician.
	Faulty blower	
Fault Alarm sounds; "PRESSURE SWITCH" indicator illuminates, No. 1 and/or No. 2	Faulty pressure switch (PS-1) and/or (PS-2)	Refer trouble to technician.

Approved For Release 2005/02/17 : CIA-RDP78B04770A001600030001-2

Approved For Release 2005/02/17 : CIA-RDP78B04770A001600030001-2

TABLE 6-1. TROUBLE SHOOTING (CONT)

TROUBLE	PROBABLE CAUSE	REMEDY
"READY" Light does not come on, all fault indicators out	Bulbs burned out in indicator (10, figure 4-1)	Have technician replace bulbs.
Fault indicator illuminates, Fault Alarm does not sound	Defective fault alarm	Refer trouble to technician.
Indicator lights do not illuminate when "PANEL TEST" button is pushed	Indicator bulbs burned out	Have technician replace bulbs.
	Faulty relay	Refer trouble to technician.
Indicator lights do not illuminate when "PANEL TEST" button is pushed (CONT)	Faulty panel intensity control potentiometer	Refer trouble to technician.
"NO GO" Test Light illuminates when "LAMP TEST" button is pushed	One or more of dodge circuits malfunctioning or timed-out improperly. Lamp out of calibration	Have technician isolate and replace faulty dodge circuit or lamp. Refer to Para. 6-3.

Approved For Release 2005/02/17 : CIA-RDP78B04770A001600030001-2

Approved For Release 2005/02/17 : CIA-RDP78B04770A001600030001-2

SECTION VII
INTRODUCTION OF PARTS BREAKDOWN

7-1. GENERAL

7-2. The Illustrated Parts Breakdown lists and illustrates the assemblies and component parts of the printer.

7-3. TABLE OF CONTENTS. The table of contents, at the front of this technical manual shows the method of grouping the parts and the sequence of the groups.

7-4. GROUP ASSEMBLY PARTS LIST. The group assembly parts list (Section VIII) consists of the complete printer assembly, divided into its major assemblies, as shown in the table of contents. Each major assembly listed is followed immediately by its component parts properly indented, thereunder, to show their relationship to the assembly.

7-5. FIGURE AND INDEX NUMBER. The figure and index numbers are numerically arranged in the group assembly parts list and are used to assist in disassembly of parts.

7-6. PART NUMBER. The part number column consists of Miller-Holzwarth and standard vendor part numbers.

7-7. DESCRIPTION. The description column lists the description of the part in accordance with the manufacturers nomenclature. Vendor names follow the part description, in parenthesis, for vendor items.

7-8. UNITS PER ASSEMBLY. The quantities listed in the units per assembly column are, in the case of assemblies, the total quantity used per enlarger assembly at the location indicated; while the component parts indented under the assemblies are the quantity used per assembly. The quantities specified, therefore, are not necessarily the total used per printer assembly. Reference and As Required are designated REF and AR.

7-9. USABLE ON CODE. As only one model is covered in this breakdown and all parts apply to this one model, the Usable On Code column has been left blank.

Approved For Release 2005/02/17 : CIA-RDP78B04770A001600030001-2

Approved For Release 2005/02/17 : CIA-RDP78B04770A001600030001-2

SECTION VIII
GROUP ASSEMBLY PARTS LIST

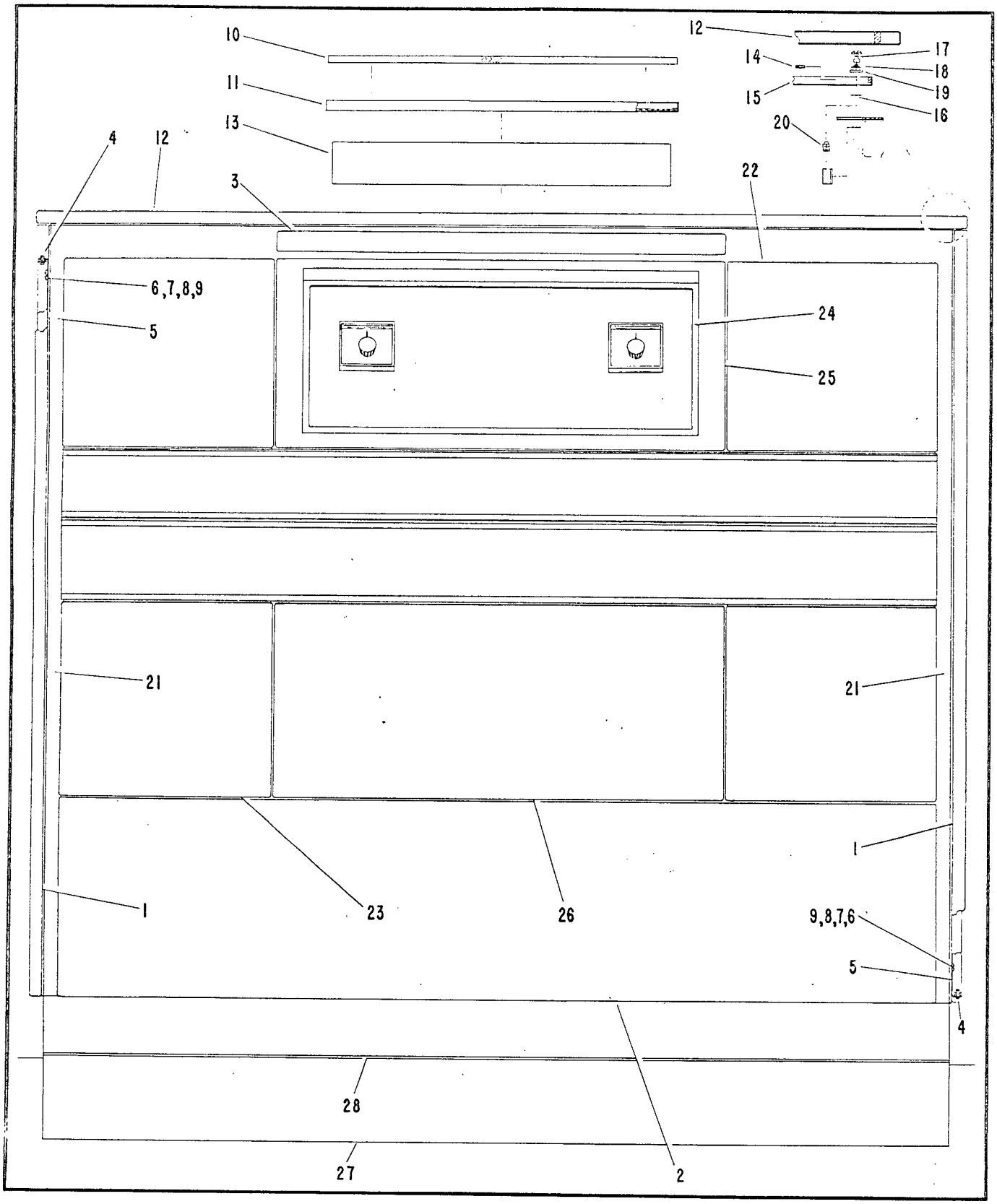

Figure 8-1. Printer-Contact Duplicating and Reseau (front view)

Approved For Release 2005/02/17 : CIA-RDP78B04770A001600030001-2

Approved For Release 2005/02/17 : CIA-RDP78B04770A001600030001-2

FIG. & INDEX NO.	PART NUMBER	DESCRIPTION 1 2 3 4 5 6 7	UNITS PER ASSY	USABLE ON CODE
8-1	F5600	PRINTER-CONTACT DUPLICATING AND RESEAU (Front view)	1	
-1	F5999	. PANEL-OUTER, Side	2	
-2	F6059	. PANEL-FRONT, Lower	1	
-3	D6117	. NAMEPLATE	1	
-4	BL54N	. BALL PLUNGER (Vlier)	36	
-5	F6001	. PANEL-INNER, Side	2	
-6	82-32-101-17	. RETAINER (South Chester Corp.)	40	
-7	82-11-260-16	. STUD, Type 2-0-260 (South Chester Corp.)	40	
-8	43-13-1-23	. SPRING (South Chester Corp.)	40	
-9	82-46-101-41	. WASHER (South Chester Corp.)	40	
	F5895	. TOP PANEL ASSEMBLY	1	
	B5898	. . FILTER-OUTER	1	
-10	D5897	. . . FILTER	1	
-11	D5896	. . . FRAME-FILTER	1	
-12	F5736	. . PANEL-OUTER, Top	1	
-13	IE-250-2	. . FILTER-ABSOLUTE (Cambridge Filter Corp.)	1	
-14	BL54N	. . BALL PLUNGER (Vlier)	20	
-15	F5738	. . PANEL-INNER	1	
-16	82-32-101-17	. . RETAINER (South Chester Corp.)	20	
-17	82-11-260-16	. . STUD, Type 2-0-260 (South Chester Corp.)	20	
-18	43-13-1-23	. . SPRING (South Chester Corp.)	20	
-19	82-46-101-41	. . WASHER (South Chester Corp.)	20	
-20	82-35-305-27	. . RECEPTACLE (South Chester Corp.)	20	
-21	F5733	. DRAWER LATCHING ASSEMBLY (See figure 8-3)	2	
-22	F5729	. UPPER DRIVE ASSEMBLY (See figure 8-7)	1	
-23	F5693	. LOWER DRIVE ASSEMBLY (See figures 8-16 and 8-17)	1	
-24	F5798	. CONTROL PANEL ASSEMBLY (See figure 8-23)	1	
-25	F5784	. HOUSING-CONTROL PANEL	1	
-26	F6003	. SWITCH ASSEMBLY, Lamp programming (See figure 8-24)	1	
-27	F6110	. BASE-SUB, Printer	1	
-28	F6110-D	. . GASKET	1	

Approved For Release 2005/02/17 : CIA-RDP78B04770A001600030001-2

Approved For Release 2005/02/17 : CIA-RDP78B04770A001600030001-2

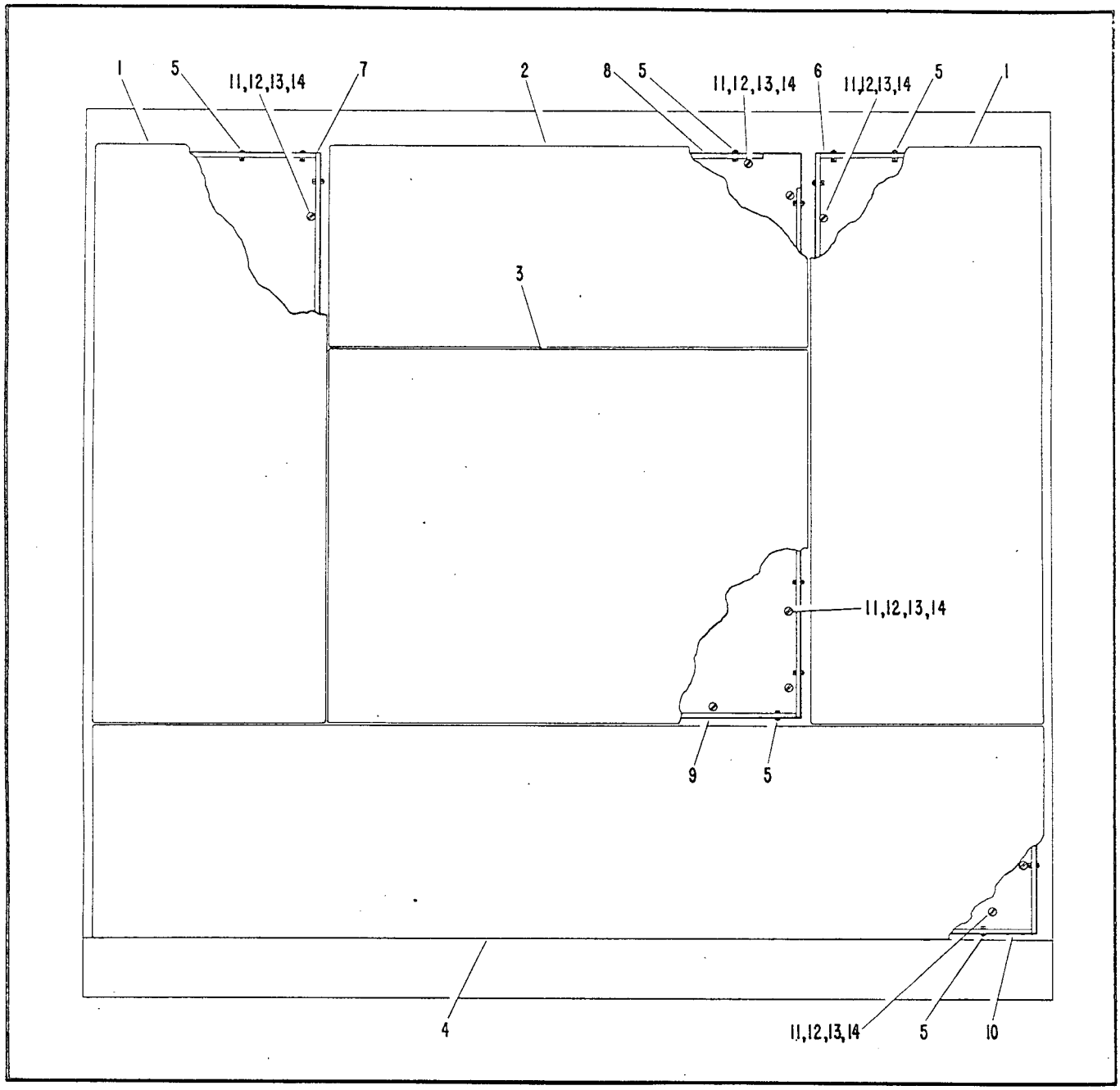

Figure 8-2. Printer (back view)

FIG. & INDEX NO.	PART NUMBER	DESCRIPTION 1 2 3 4 5 6 7	UNITS PER ASSY	USABLE ON CODE
8-2	F5600	PRINTER-CONTACT DUPLICATING & RESEAU (Back view) .	1	
-1	F6060	. PANEL-SIDE, Upper back	2	
-2	F5789	. PANEL-OUTER, Rear, Center, Upper	1	
-3	F6039	. PANEL-OUTER, Center back	1	
-4	F6036	. PANEL-OUTER, Lower back	1	
-5	BL54N	. BALL PLUNGER (Vlier)	72	
-6	F6061-1	. PANEL-INNER, Upper back	1	
-7	F6061-2	. PANEL-INNER, Upper back	1	

Approved For Release 2005/02/17 : CIA-RDP78B04770A001600030001-2

Approved For Release 2005/02/17 : CIA-RDP78B04770A001600030001-2

FIG. & INDEX NO.	PART NUMBER	DESCRIPTION 1 2 3 4 5 6 7	UNITS PER ASSY	USABLE ON CODE
8-2 -8	F5802	. PANEL-INNER, Rear	1	
-9	F6040	. PANEL-INNER, Center back	1	
-10	F6037	. PANEL-INNER, Lower back	1	
		(ATTACHING PARTS)		
-11	82-32-101-17	. RETAINER (South Chester Corp.)	56	
-12	82-11-260-16	. STUD, Type 2-0-260 (South Chester Corp.)	56	
-13	43-13-1-23	. SPRING (South Chester Corp.)	56	
-14	82-46-101-41	. WASHER (South Chester Corp.)	56	
		---------*---------		

Approved For Release 2005/02/17 : CIA-RDP78B04770A001600030001-2

Approved For Release 2005/02/17 : CIA-RDP78B04770A001600030001-2

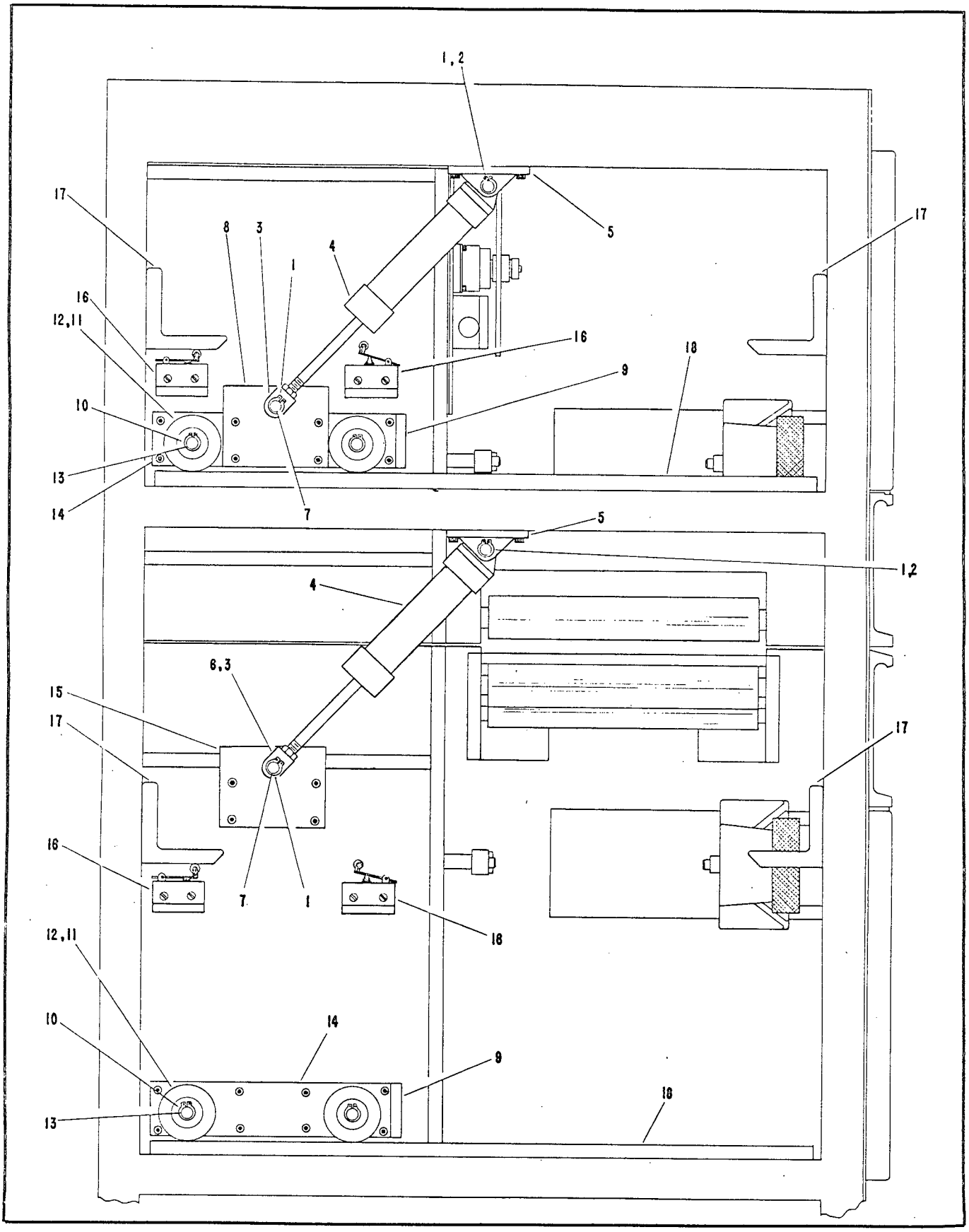

Figure 8-3. Drawer Latching Assembly

Approved For Release 2005/02/17 : CIA-RDP78B04770A001600030001-2

Approved For Release 2005/02/17 : CIA-RDP78B04770A001600030001-2

FIG. & INDEX NO.	PART NUMBER	DESCRIPTION 1 2 3 4 5 6 7	UNITS PER ASSY	USABLE ON CODE
8-3	F5733	DRAWER LATCHING ASSEMBLY, Left hand (Drawer Latching Assembly is typical for both sides of printer, with the exception of the Parts Carrying Index No. 16 and 17 which are used on the left side of machine only.)	2	
-1	5100-37-W	. RETAINING RING (Waldes Kohinoor, Inc.)	12	
-2	F5733-22	. PIN-PIVOT, Cylinder	4	
-3	F5733-12	. BLOCK-PIVOT	4	
-4	DA-4	. AIR CYLINDER (Bellows Valvair Co.)	4	
-5	F5733-23	. BLOCK-MOUNTING, Cylinder	4	
-6	F5733-18	. SPACER-PIVOT	2	
-7	F5733-10	. SHAFT-PIVOT	4	
-8	F5733-9	. PLATE-PIVOT, Air cylinder	2	
-9	F5733-19	. BLOCK-STOP	4	
-10	5100-50-W	. RETAINING RING (Waldes Kohinoor, Inc.)	8	
-11	A5978	. ROLLER-OUT BOARD	8	
-12	S5KPP	. BALL BEARING (Fafnir Bearing Co.)	8	
-13	A5989	. PIN-SUPPORT	8	
-14	B5988	. PLATE-SUPPORT	4	
-15	F5733-24	. PLATE-PIVOT, Air cylinder	2	
-16	DT-2RV22-A7	. SWITCH (Micro Switch Corp.)	4	
-17	B6244	. PLATE-STRIKER	4	
-18	D5979	. PLATE-WEAR	4	

Approved For Release 2005/02/17 : CIA-RDP78B04770A001600030001-2

Approved For Release 2005/02/17 : CIA-RDP78B04770A001600030001-2

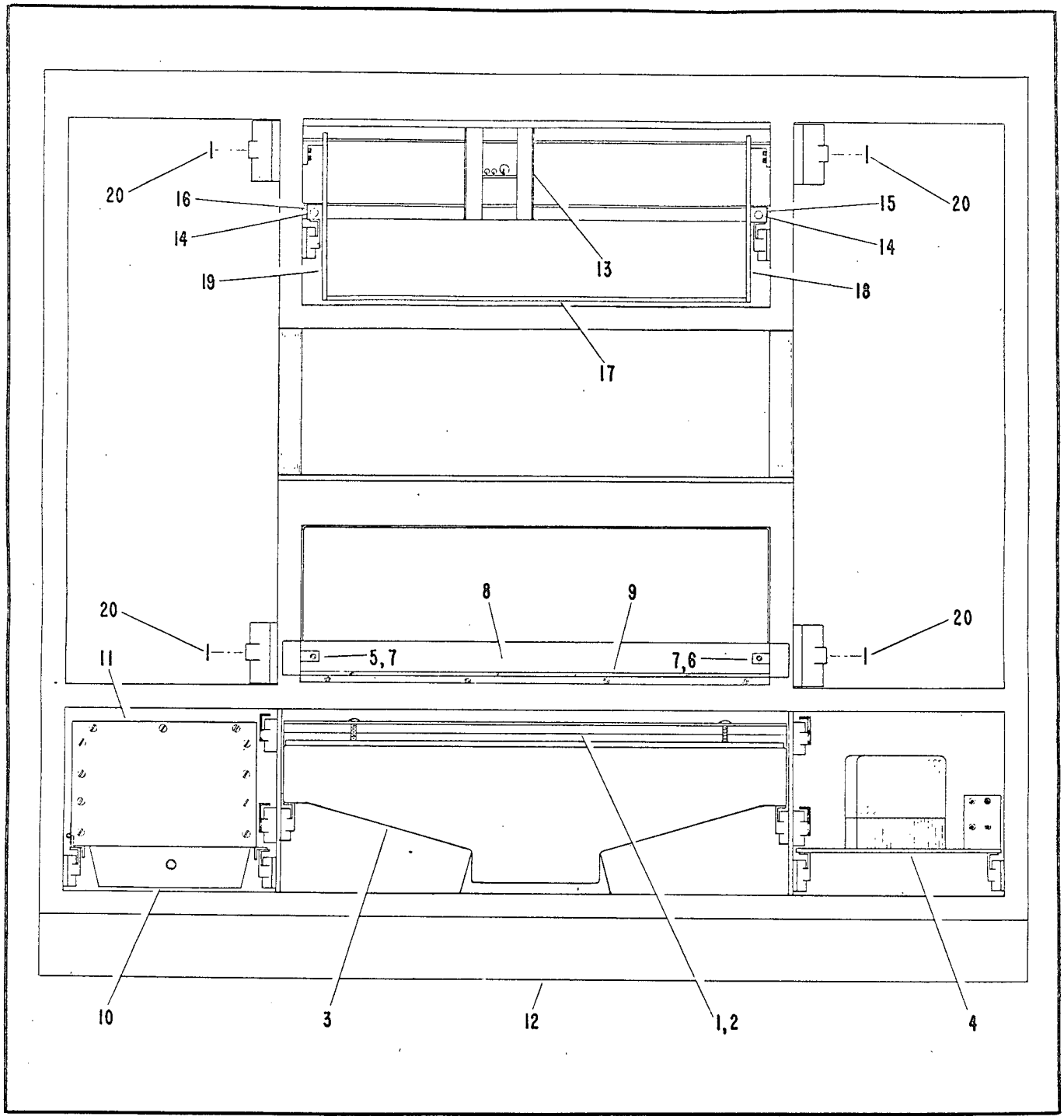

Figure 8-4. Printer (front view)

FIG. & INDEX NO.	PART NUMBER	DESCRIPTION 1 2 3 4 5 6 7	UNITS PER ASSY	USABLE ON CODE
8-4	F5600	PRINTER-CONTACT DUPLICATING AND RESEAU, ... Front view (Film Drives, Control Panel Assembly, Lamp Programming Switch Assembly and Outer Panels removed) See figures 8-1, 8-2, and 8-3.	1	

Approved For Release 2005/02/17 : CIA-RDP78B04770A001600030001-2

Approved For Release 2005/02/17 : CIA-RDP78B04770A001600030001-2

FIG. & INDEX NO.	PART NUMBER	DESCRIPTION 1 2 3 4 5 6 7	UNITS PER ASSY	USABLE ON CODE
8-4 -1	No Part No.	. LENS ASSEMBLY, See figure 8-26	1	
-2	B5853	. GASKET-LENS RETAINER	1	
-3	F5983	. LAMP HOUSING ASSEMBLY, See figure 8-27	1	
-4	F5739	. LOWER RIGHT HAND DRAWER, See figure 8-25	1	
-5	B6021-1	. BLOCK-ATTACHMENT	1	
-6	B6021-2	. BLOCK-ATTACHMENT	1	
-7	82-35-305-27	. . RECEPTACLE (South Chester Corp.)	2	
-8	D5852	. COLLIMATING PLATE	1	
-9	F5600-111	. GLASS-CLEAR	1	
-10	F6038	. LOWER LEFT HAND MODULE ASSEMBLY, See figure 8-28	1	
-11	F6026	. . COVER ASSEMBLY, See figure 8-29	1	
-12	F5832	. BASE ASSEMBLY, See figure 8-30	1	
-13	D6177	. VOLTAGE DIVIDER, See figure 8-31	1	
-14	B5788	. TIE ROD, Control panel	2	
-15	D5889-1	. BRACKET-MOUNTING, Tie rod	1	
-16	D5889-2	. BRACKET-MOUNTING, Tie rod	1	
-17	D5872	. PLATE-BOTTOM	1	
-18	D5787-1	. PLATE-SIDE	1	
-19	D5787-2	. PLATE-SIDE	1	
-20	D5585	. SPACER-SLIDE ASSEMBLY	4	

Approved For Release 2005/02/17 : CIA-RDP78B04770A001600030001-2

Approved For Release 2005/02/17 : CIA-RDP78B04770A001600030001-2

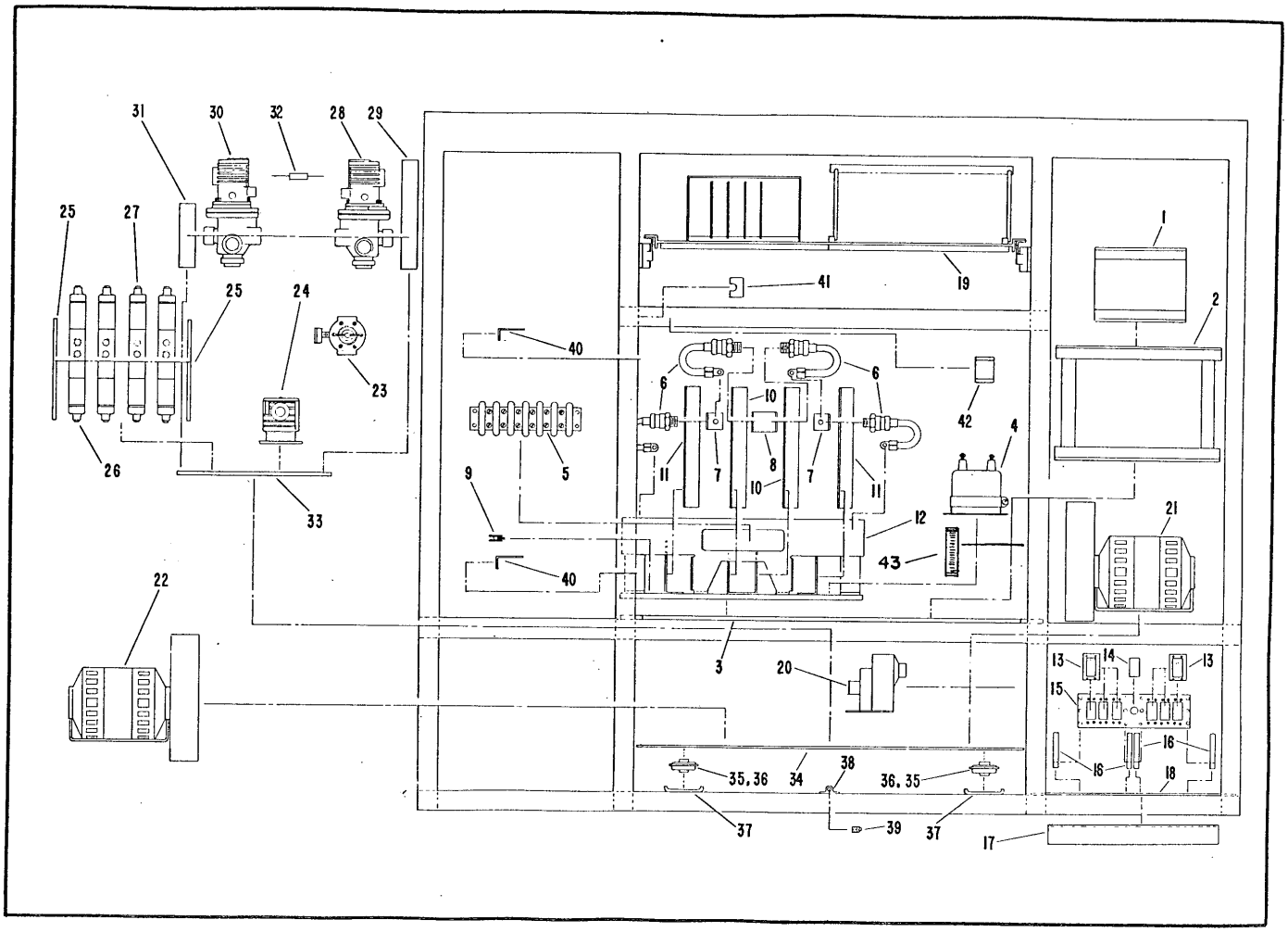

Figure 8-5 Printer (back view)

Approved For Release 2005/02/17 : CIA-RDP78B04770A001600030001-2

Approved For Release 2005/02/17 : CIA-RDP78B04770A001600030001-2

FIG. & INDEX NO.	PART NUMBER	DESCRIPTION 1 2 3 4 5 6 7	UNITS PER ASSY	USABLE ON CODE
8-5	F5600	PRINTER-CONTACT DUPLICATING AND RESEAU, Back view (Film Drives, Lamp dodge assembly, and Outer panels etc. removed) See figures 8-1, 8-2, 8-3 and 8-4.	1	
	D5888	. POWER SUPPLY ASSEMBLY	1	
-1	CH-100	. . CHOKE (Signal Transformer Co.)	1	
-2	D5888-4	. . TRANSFORMER	1	
	F5886	. . POWER SUPPLY ASSEMBLY	1	
-3	D5887	. . POWER SUPPLY SHELF	1	
-4	CP70E1EF805K	. . . CAPACITOR (Sprague Electric Co.)	1	
-5	6-151	. . . BARRIER BLOCK (Cinch-Jones)	1	
-6	A90B	. . . DIODE, Jedec 1N3736 (General Electric Co.)	4	
-7	B5878	. . . DIODE TERMINAL	2	
-8	B5879	. . . HEAT SINK BUS BAR	1	
-9	6RS21SA6D6	. . . THYRECTOR (General Electric Co.)	1	
-10	D5883-1	. . . HEAT SINK	2	
-11	D5883-2	. . . HEAT SINK	2	
-12	D5885	. . . BASE, POWER SUPPLY	1	
	F6050	. RECEPTACLE ASSEMBLY, Lower left hand module	1	
-13	126-187	. . RECEPTACLE, Female (Amphenol Electronics Corp.)	6	
-14	A6049	. . JACKSCREW BAR NUT	1	
-15	B6052	. . CONNECTOR MOUNTING PLATE	1	
-16	B6053	. . BUTTRESS	4	
-17	D6162	. . ANGLE, STIFFENER	1	
-18	D6054	. . BASE PLATE	1	
-19	F5935	. LAMP DODGE CHASSIS ASSEMBLY, See figure 8-32	1	
	F5939	. VALVE AND BLOWER ASSEMBLY	1	
-20	D2TH18	. . PRESSURE SWITCH (Barksdale)	2	
-21	A6010X-3C	. . BLOWER (Ashland Electric Products Model C13V24Q-4C-5C)	1	
-22	A6010X-3CC	. . BLOWER (Ashland Electric Products Model C13V24Q-4CC-5CC)	1	
	F6173	. . VALVING MODULE ASSEMBLY	1	
-23	R2050LP	. . . PRESSURE REGULATOR (Hannifin Co.)	1	
-24	VPC-63A	. . . VALVE (Bellows-Valvair Co.)	1	
-25	F6173-3	. . . PLATE-SUPPORT, Valve	2	
-26	115004S024	. . . VALVE-SLIMLINE (Bellows-Valvair Co.)	1	
-27	125004S024	. . . VALVE-SLIMLINE (Bellows-Valvair Co.)	3	
-28	3NC50X	. . . VALVE (Bellows-Valvair Co.)	1	
-29	D5838	. . . BAR-MOUNTING, Valve	1	
-30	3NC50	. . . VALVE (Bellows-Valvair Co.)	1	
-31	B5857	. . . BAR-MOUNTING	1	
-32	S255	. . . DOUBLE ANODE DEVICE, See figure , Machine Elementary Diagram (Sarkes-Tarzian)	7	
-33	F6173-2	. . . PLATE-BASE	1	
-34	F6172	. . PLATE-MOUNTING	1	
-35	206PD6-45	. . MULTI-PLANE SHOCK MOUNT (Lord Manufacturing Co.	4	
-36	206	. . WASHER-SNUBBING	4	
-37	D5797	. . SUPPORT-AIR VALVE ASSEMBLY	2	
	F5582	. FRAME ASSEMBLY (Ref. Only)	1	
-38	A5803-2	. . BAR-EXTRUDED	3	
-39	82-35-305-27	. . . RECEPTACLE (South Chester Corp.)	3	
-40	B6152	. . FIXTURE-HOSE	2	
-41	A6234	. . CLAMP-HOLD DOWN	1	
-42	B6215	. . BLOCK-MOUNTING, HOSE	1	
-43	7 Ohm	. RESISTOR, 100 Watt	1	

Approved For Release 2005/02/17 : CIA-RDP78B04770A001600030001-2

Approved For Release 2005/02/17 : CIA-RDP78B04770A001600030001-2

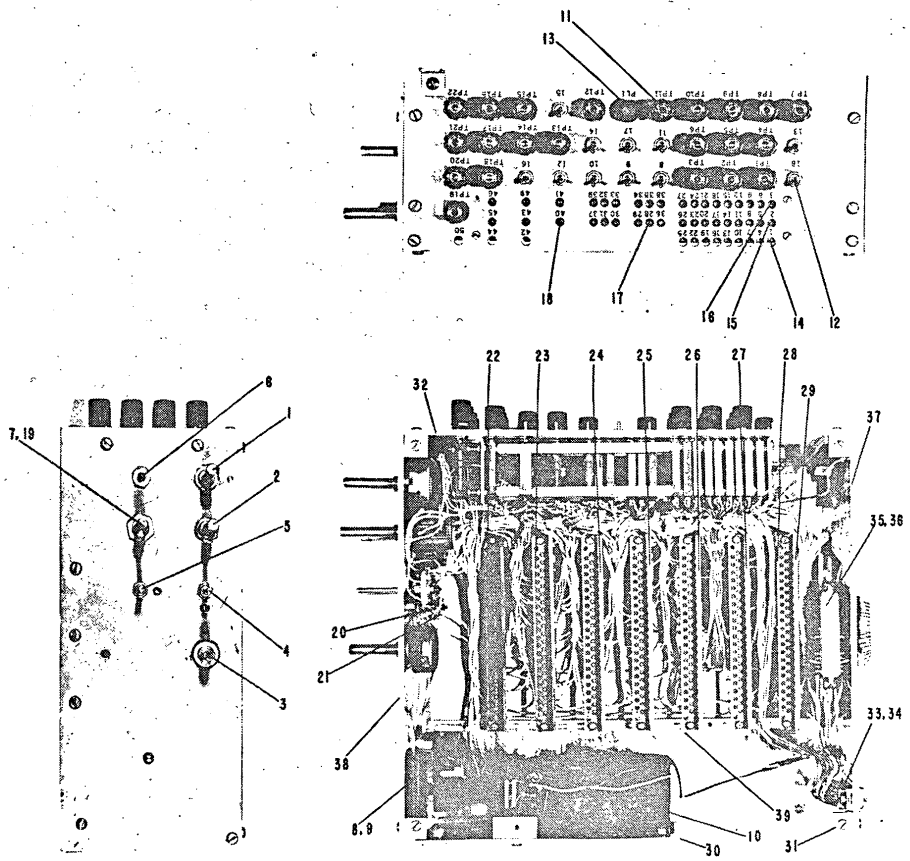

Figure 8-18. Frame Separation Detector

Approved For Release 2005/02/17 : CIA-RDP78B04770A001600030001-2

Approved For Release 2005/02/17 : CIA-RDP78B04770A001600030001-2

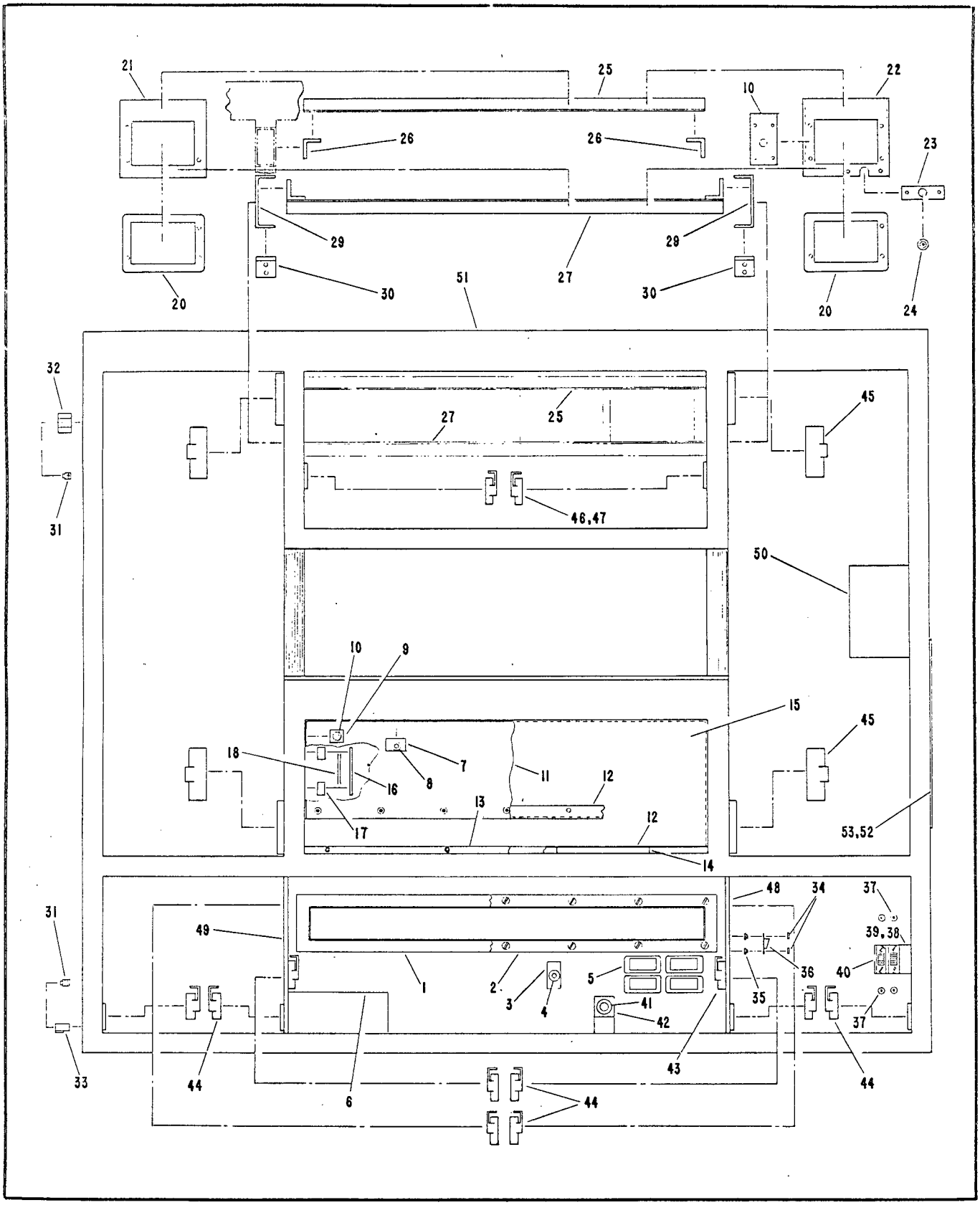

Figure 8-6. Printer (front view)

Approved For Release 2005/02/17 : CIA-RDP78B04770A001600030001-2

Approved For Release 2005/02/17 : CIA-RDP78B04770A001600030001-2

FIG. & INDEX NO.	PART NUMBER	DESCRIPTION 1 2 3 4 5 6 7	UNITS PER ASSY	USABLE ON CODE
8-6	F5600	PRINTER-CONTACT DUPLICATING AND RESEAU, Front view (All Major Assembly removed)	1	
-1	B5855	. GASKET-LIGHT HOUSING	1	
	F5939	. VALVE AND BLOWER ASSEMBLY, Ref. (See 8-5-20 thru 8-5-36 for remainder of items on assembly)	1	
-2	D5901	. . ASSEMBLY-DUCT, Lamp	1	
-3	B5521	. . BUSS BAR PIN RECEPTACLE	1	
-4	B5461	. . BLOCK-MOUNTING	1	
-5	QRE-24S	. . RECEPTACLE (Winchester Electronics Corp.)	4	
-6	F5850	. . PANEL-REAR, Lower	1	
	F6003	. SWITCH ASSEMBLY, Ref. Only	1	
-7	B6032	. . BAR-ATTACHMENT	2	
-8	82-35-305-27	. . . RECEPTACLE (South Chester Corp.)	2	
-9	B6121	. . BAR-ATTACHMENT	2	
-10	82-35-305-27	. . . RECEPTACLE (South Chester Corp.)	2	
-11	D5848	. PANEL-FRONT	1	
-12	D5851	. RETAINER-COLLIMATING PLATE	2	
-13	D5849	. BAR-MOUNTING, Mask plate	1	
-14	B6005	. RETAINER-PLATE	2	
-15	D5847	. PANEL-REAR UPPER	1	
-16	B6164	. COVER-WIRING	1	
-17	B6165	. SPACER-COVER	2	
-18	A6209	. COVER FISH PAPER	2	
-19	B6228	. PLATE-JACK SCREW	1	
-20	QRE-208-S	. PLUG (Winchester Electronics)	2	
-21	B5919	. CONNECTOR MOUNTING CHANNEL	1	
-22	B5921	. CONNECTOR MOUNTING CHANNEL	1	
-23	B5923	. BLOCK-MOUNTING, Bushing	1	
-24	B5924	. BUSHING, Ground pin	1	
-25	B5922	. ANGLE-HORIZONTAL	1	
-26	B5991-2	. ANGLE-SUPPORT	2	
-27	B5920	. ANGLE-HORIZONTAL	1	
-28	B5991-1	. ANGLE-SUPPORT	2	
-29	B5927	. CHANNEL-SUPPORT	2	
-30	B5930	. CLIP-MOUNTING, Support channel	4	
-31	82-35-305-27	. RECEPTACLE (South Chester Corp.)	94	
	F5582	. FRAME ASSEMBLY	1	
-32	A5803-1	. . BAR-EXTRUDED	93	
-33	A6119	. . BAR-EXTRUDED	1	
-34	A6332	. . WASHER-INSULATING	2	
-35	A6331	. . WASHER-INSULATING	2	
-36	15	. . BUZZER, Size 2 (Edwards)	1	
-37	B6155	. . STAND OFF-PLUG	4	
-38	B6154	. . PLATE-REAR, Mounting block	1	
-39	B6156	. . STAND OFF-REAR PLUG	1	
-40	26-183	. . CONNECTOR (Amphenol Electronics Corp.)	2	
-41	A5835	. . INSERT-THREADED	1	
-42	B5836	. . RECEIVER-JACK SCREW	1	
-43	4994-0-16	. . SLIDE ASSEMBLY (Grant Pulley and Hardware Co.)	1	
-44	4994-0-28	. . SLIDE ASSEMBLY (Grant Pulley and Hardware Co.)	4	
-45	4853-0-28	. . SLIDE ASSEMBLY (Grant Pulley and Hardware Co.)	2	
-46	4994-0-10	. . SLIDE ASSEMBLY (Grant Pulley and Hardware Co.)	1	
-47	4994-0-18	. . SLIDE ASSEMBLY (Grant Pulley and Hardware Co.)	1	
-48	F5863	. . PANEL-SIDE, Right hand	1	
-49	F5864	. . PANEL-SIDE, Left hand	1	
-50	D6167	. . PLATE-STRIKER, Switch assembly	1	
-51	F5582-2	. . FRAME	1	
-52	565	. TAPE -VINYL, 1/8 thick by 1-1/2 wide, black	As required	
-53	565	. TAPE -VINYL, 1/8 thick by 1/2 wide, black	As required	

Approved For Release 2005/02/17 : CIA-RDP78B04770A001600030001-2

Approved For Release 2005/02/17 : CIA-RDP78B04770A001600030001-2

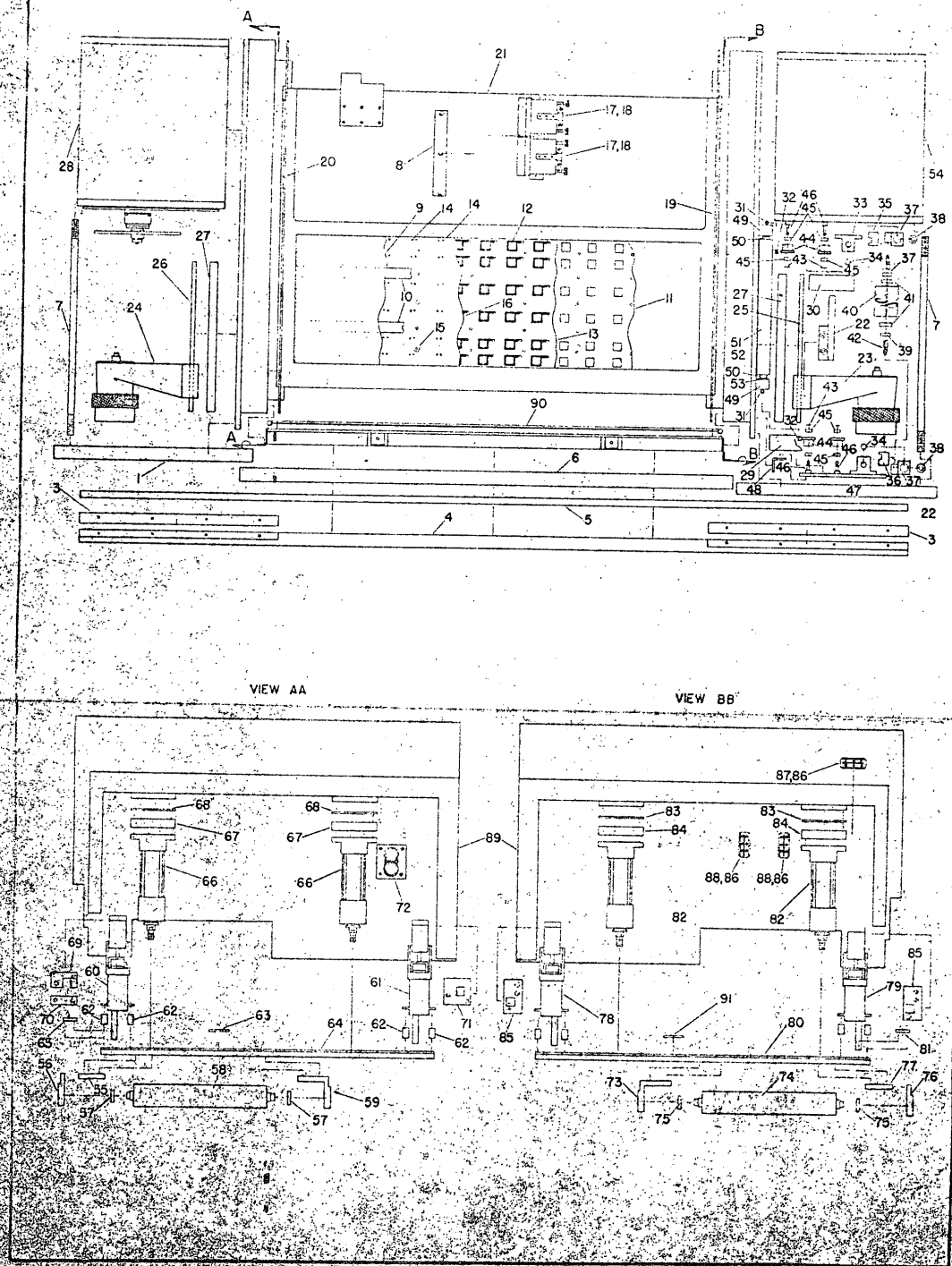

Figure 8-7. Upper Drive Assembly

Approved For Release 2005/02/17 : CIA-RDP78B04770A001600030001-2

Approved For Release 2005/02/17 : CIA-RDP78B04770A001600030001-2

FIG. & INDEX NO.	PART NUMBER	DESCRIPTION 1 2 3 4 5 6 7	UNITS PER ASSY	USABLE ON CODE
8-7	F5729	UPPER DRIVE ASSEMBLY (See Index 22, figure 8-1 for NHA)	1	
-1	D5773-2	. PANEL-TOP DRIVE, Left hand	1	
-2	D5773-1	. PANEL-TOP DRIVE, Right hand	1	
-3	B5893	. SPACER-PANEL	2	
-4	F5877	. HANDLE-UPPER	1	
-5	D5993	. BAR-KNIFE, Seal	1	
-6	B5894	. PLATE-SPACER, Handle	1	
-7	B5737	. TIE ROD-PANEL	2	
-8	B6233	. CAP-BLOCK, Plug mounting	1	
	F5903	. ASSEMBLY-PHOTOCELL	1	
-9	D6079	. . PANEL-COVER	1	
-10	D5907	. . BAR-SUPPORT	2	
-11	D5905	. . PLATE-MOUNTING, Bottom	1	
-12	S1V7112	. . PHOTOCELL (Texas Instrument, Inc.)	96	
-13	D5904	. . PLATE-MOUNTING, Photocell	1	
-14	X1463-A	. . FEED THRU (Cambridge Thermionic Corp.)	192	
-15	A5908	. . INSERT-THREADED	24	
-16	D5906	. . PLATE-MOUNTING, Top	1	
-17	MI-50M2HRSL-DM3030G	. . CONNECTOR-MALE	2	
-18	MI-50F2HRSL-DM3030G	. . CONNECTOR-FEMALE	2	
-19	D5774	. FRAME COVER ASSEMBLY, Right hand	1	
-20	D5779	. FRAME COVER ASSEMBLY, Left hand	1	
-21	F5596	. AIR BAG ASSEMBLY, (See Figure 8-8)	1	
-22	B5770	. CAM	1	
-23	D5539-1	. SPOOL SUPPORT ASSEMBLY, Right hand, (See Figure 8-9)	1	
-24	D5539-2	. SPOOL SUPPORT ASSEMBLY, Left hand, (See Figure 8-9)	1	
-25	D5730-1	. RETAINER-SPOOL SUPPORT, Right hand	1	
-26	D5730-2	. RETAINER-SPOOL SUPPORT, Left hand	1	
-27	B5734	. RISER-SPOOL SUPPORT	2	
-28	F5702	. . DRIVE MODULE, Upper Left hand, (See Figure 8-10)	1	
	F5937	. ASSEMBLY-DRIVE, Upper right hand	1	
-29	B6302-1	. . COVER-SPROCKET	1	
-30	B6302-2	. . COVER-SPROCKET	1	
-31		. . SPRING-COUNTERBALANCE	2	
-32	25	. . CHAIN-ROLLER	2	
-33	B6303	. . BLOCK-SUPPORT, Shaft	4	
-34	A6261	. . SHAFT-GUIDE	2	
-35	A6304-2	. . BLOCK-ATTACH, Chain	1	
-36	A6304-1	. . BLOCK-ATTACH, Chain	1	
-37	B6263-2	. . GUIDE-ROLL, Dance	2	
-38	XA-61014	. . . LINEAR BEARING (Thompson Industries, Inc.)	4	
-39	A6276	. . COLLAR-DANCE ROLL	2	
-40	D6275	. . DANCE ROLL	1	
-41	S3KDD	. . . BEARING (Fafnir Bearing Co.)	2	
-42	B6264	. . SHAFT-DANCE ROLL	1	
-43	5100-18W	. . RETAINING RING (Waldes-Kohinoor)	4	
-44	B6298	. . SPROCKET	4	
-45	33KDD5	. . . BALL BEARING (Fafnir Bearing Co.)	8	
-46	B6297	. . SHAFT-SUPPORT, Sprocket	4	
-47	D6290	. . PLATE-SUPPORT, Lead roll	1	
-48	B6260	. . ANGLE-SUPPORT	1	
-49	B6291	. . BLOCK-MOUNTING, Roll	2	
-50	A6296	. . COLLAR, Roll-Idler	2	
-52	S1KDD7	. . . BEARING (Fafnir Bearing Co.)	2	
-53	B6295	. . SHAFT, Roll-Idler	1	
-54	F5703	. . DRIVE MODULE, Upper right hand, (See Figure 8-12)	1	

Approved For Release 2005/02/17 : CIA-RDP78B04770A001600030001-2

Approved For Release 2005/02/17 : CIA-RDP78B04770A001600030001-2

FIG. & INDEX NO.	PART NUMBER	DESCRIPTION 1 2 3 4 5 6 7	UNITS PER ASSY	USABLE ON CODE
8-7	F5729	UPPER DRIVE ASSEMBLY, (See view AA, Figure 8-7)		
-55	B5967	. BLOCK-MOUNTING, Bearing retainer	1	
-56	B5968	. BEARING RETAINER	1	
-57	MMS5K	. BALL BEARING (Fafnir Bearing Co.)	2	
-58	D5724-1	. LEAD ROLL	1	
-59	B5759	. RETAINER-BEARING	1	
-60	D5772-3	. LATCH ASSEMBLY, (See Figure 8-13)	1	
-61	D5772-4	. LATCH ASSEMBLY, (See Figure 8-13)	1	
-62	B5766	. RISER-LATCH ASSEMBLY.....	4	
-63	A6200	. CLAMP-T	1	
-64	D5757-2	. RETAINER ASSEMBLY, Air Bag	1	
-65	D5757-8	. . STOP BLOCK	1	
-66	B5765	. CYLINDER-AIR	2	
-67	B5768	. RISER-AIR CYLINDER	4	
-68	B5769	. SHIM-AIR CYLINDER	4	
-69	A6133	. PLATE-LATCH, Front top left	1	
-70	A6132	. PLATE-LATCH, Front middle left	1	
-71	A6148	. PLATE-LATCH, Upper left back	1	
-72	D5584	. TIE BAR, Upper, drive	1	
	F5729	UPPER DRIVE ASSEMBLY, (See view BB, Figure 8-7)		
-73	B5759	. RETAINER-BEARING	1	
-74	D5724-1	. LEAD ROLL	1	
-75	MMS5K	. BALL BEARING (Fafnir Bearing Co.)	2	
-76	B5968	. BEARING RETAINER	1	
-77	B5967	. BLOCK-MOUNTING, Bearing retainer	1	
-78	D5772-2	. LATCH ASSEMBLY, (See Figure 8-14)	1	
-79	D5772-1	. LATCH ASSEMBLY, (See Figure 8-14)	1	
-80	D5757-1	. RETAINER ASSEMBLY-AIR BAG	1	
-81	D5757-8	. . STOP BLOCK	1	
-82	30130	. CYLINDER, 1-1/2 bore By 2" stroke (Schrader)	2	
-83	B5769	. SHIM-AIR CYLINDER	4	
-84	B5768	. RISER-AIR CYLINDER	4	
-85	A6134	. PLATE-LATCH, Rear.....	2	
-86	DT-2R-A7	. SWITCH (Micro Switch Corp.)	3	
-87	MD3211Q	. AUXILARY ACTUATOR (Micro Switch Corp.)	1	
-88	MD3211Q1	. AUXILARY ACTUATOR (Micro Switch Corp.)	2	
	F5937	. ASSEMBLY-DRIVE, Upper right hand (Ref. Only)		
-89	F5583	. . FRAME-TOP DRIVE	1	
-90	F6181	. . SEAL-LIGHT, Center (See Figure 8-15).....	1	
-91	A6200	. CLAMP-T	1	

Approved For Release 2005/02/17 : CIA-RDP78B04770A001600030001-2

Approved For Release 2005/02/17 : CIA-RDP78B04770A001600030001-2

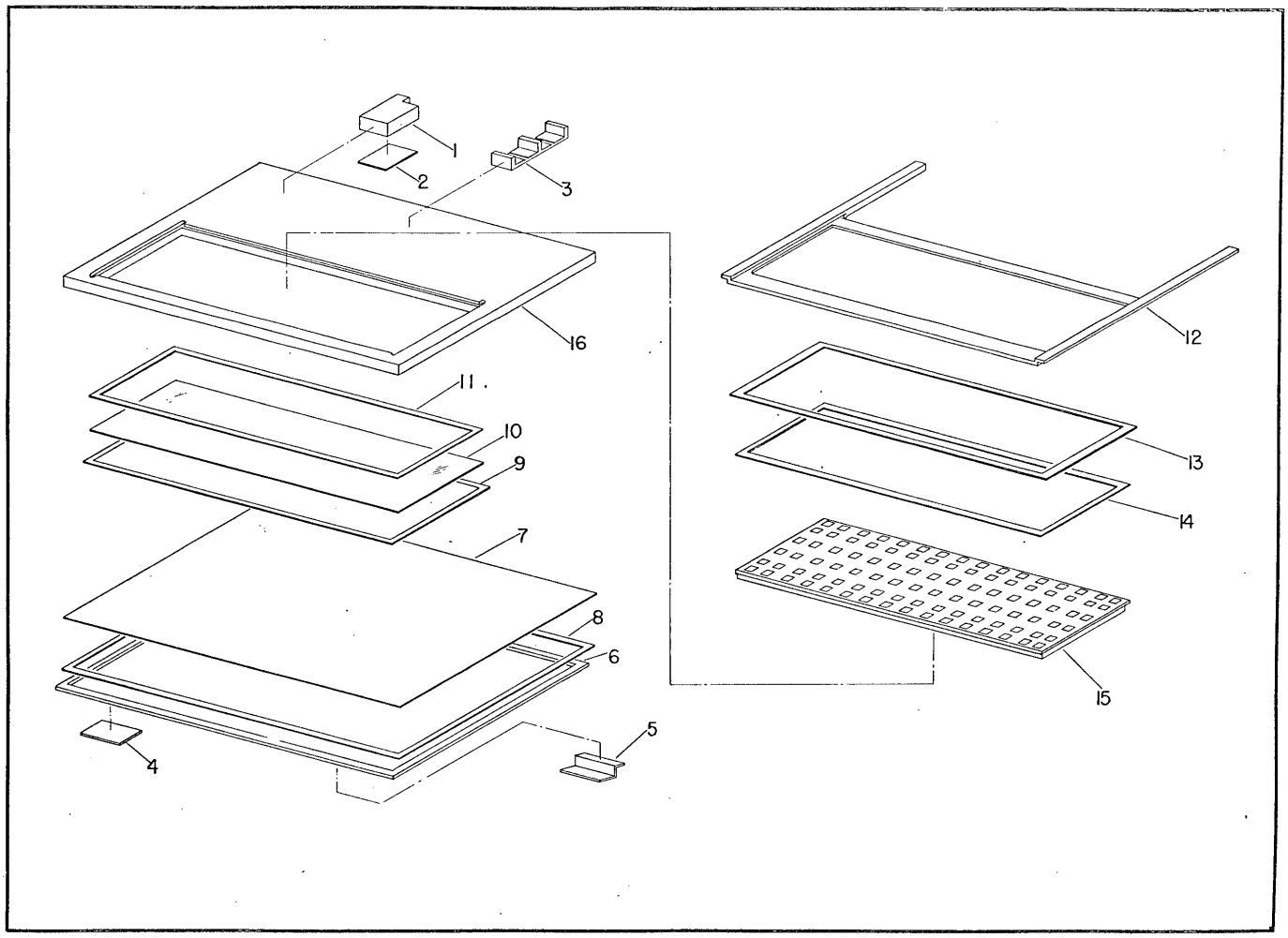

Figure 8-8. Air Bag Assembly

Approved For Release 2005/02/17 : CIA-RDP78B04770A001600030001-2

Approved For Release 2005/02/17 : CIA-RDP78B04770A001600030001-2

FIG. & INDEX NO.	PART NUMBER	DESCRIPTION 1 2 3 4 5 6 7	UNITS PER ASSY	USABLE ON CODE
8-8	F5596	AIR BAG ASSEMBLY (See Index 21, Figure 8-7 for NHA) ...	1	
-1	D5775	. MANIFOLD-AIR BAG	1	
-2	F5776	. GASKET-MANIFOLD, Air bag	1	
-3	B6332	. BLOCK-PLUG MOUNTING	1	
-4	A5731	. PLATE-STRIKER	1	
-5	B5459	. PLATE-STRIKER	1	
-6	F5616	. CLAMP-FLEXIBLE SHEET	1	
-7	D5624	. SHEET-FLEXIBLE, Air bag	1	
-8	F5596-22	. SHEET-REINFORCING, Air bag	1	
-9	D5617	. FRAME-SUPPORT, Aperature plate	1	
-10	F5596-23	. TOP-PLEXIGLAS, Air bag	1	
-11	F5596-24	. GASKET-PLEXIGLAS	1	
-12	F5615	. PLATE-RETAINING, Aperature plate	1	
-13	F5596-25	. FRAME-APERATURE PLATE	1	
-14	F5596-26	. GASKET, Aperature plate	1	
-15	D5623	. PLATE-APERATURE	1	
-16	F5614	. PLATE-SUPPORT, Aperature plate	1	

Approved For Release 2005/02/17 : CIA-RDP78B04770A001600030001-2

Approved For Release 2005/02/17 : CIA-RDP78B04770A001600030001-2

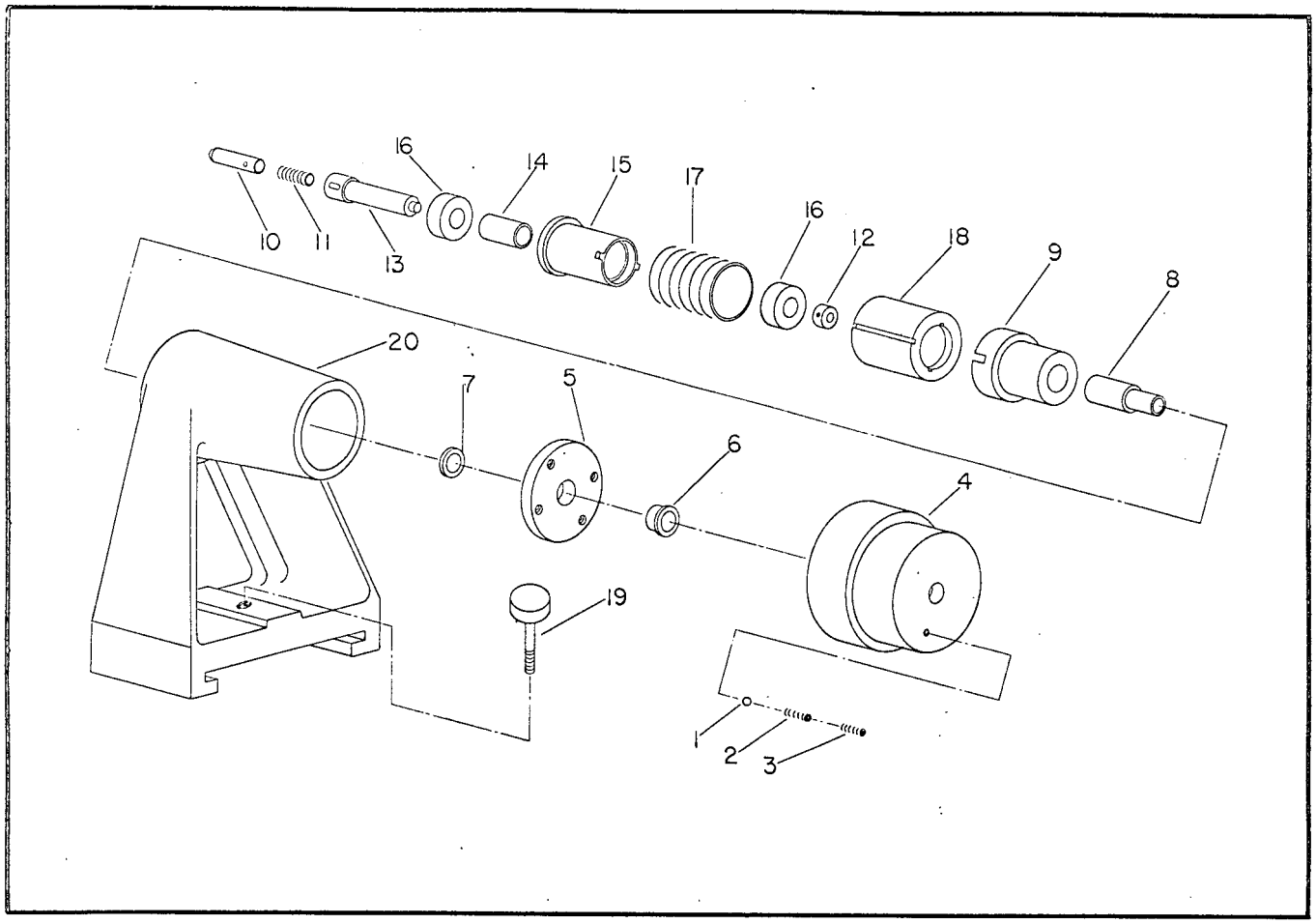

Figure 8-9. Assembly-Spool Support

FIG. & INDEX NO.	PART NUMBER	DESCRIPTION 1 2 3 4 5 6 7	UNITS PER ASSY	USABLE ON CODE
8-9	D5539-1	ASSEMBLY-SPOOL SUPPORT, Right hand (See Index 23, ... Figure 8-7 & Index , Figure 8- for NHA)	2	
	D5539-2	ASSEMBLY-SPOOL SUPPORT, Left hand (See Index 24, ... Figure 8-7 & Index , Figure 8- for NHA)	2	
-1	COMM	. DETENT BALL, 1/8 Dia., Stainless steel	4	
-2	COMM	. SPRING ..... (ATTACHING PARTS)	4	
-3	COMM	. SETSCREW, Hex socket head, No. 8-32 by 1/8 lg..... ---------*---------	4	
-4	D5554	. HANDLE-SPOOL SUPPORT	4	
-5	B5542	. PLATE-END	4	
-6	A5515	. . BEARING-FLANGE	4	
-7	A5586	. BEARING-THRUST	4	
-8	B5552-1	. SCREW, Right hand	2	
	B5552-2	. SCREW, Left hand	2	
-9	B5551-1	. NUT, Right hand	2	
	B5551-2	. NUT, Left hand	2	
-10	B5545	. SHAFT-SPOOL SUPPORT	4	
-11	A5580	. SPRING	4	
-12	B5553	. COLLAR	4	
-13	B5544	. ADAPTER	4	
-14	B5546	. SPACER	4	

Approved For Release 2005/02/17 : CIA-RDP78B04770A001600030001-2

Approved For Release 2005/02/17 : CIA-RDP78B04770A001600030001-2

FIG. & INDEX NO.	PART NUMBER	DESCRIPTION 1 2 3 4 5 6 7	UNITS PER ASSY	USABLE ON CODE
8-9 -15	B5543	. ADAPTER, SPOOL SUPPORT	4	
-16	S5KPP	. BALL BEARING (The Fafnir Bearing Co.)	8	
-17	B5581	. SPRING-COMPRESSION	4	
-18	B5541	. BUSHING	4	
-19	KHS-4S	. SCREW (Reid Tool Supply Co.)	4	
-20	D5548	. HOUSING	4	

Approved For Release 2005/02/17 : CIA-RDP78B04770A001600030001-2

Approved For Release 2005/02/17 : CIA-RDP78B04770A001600030001-2

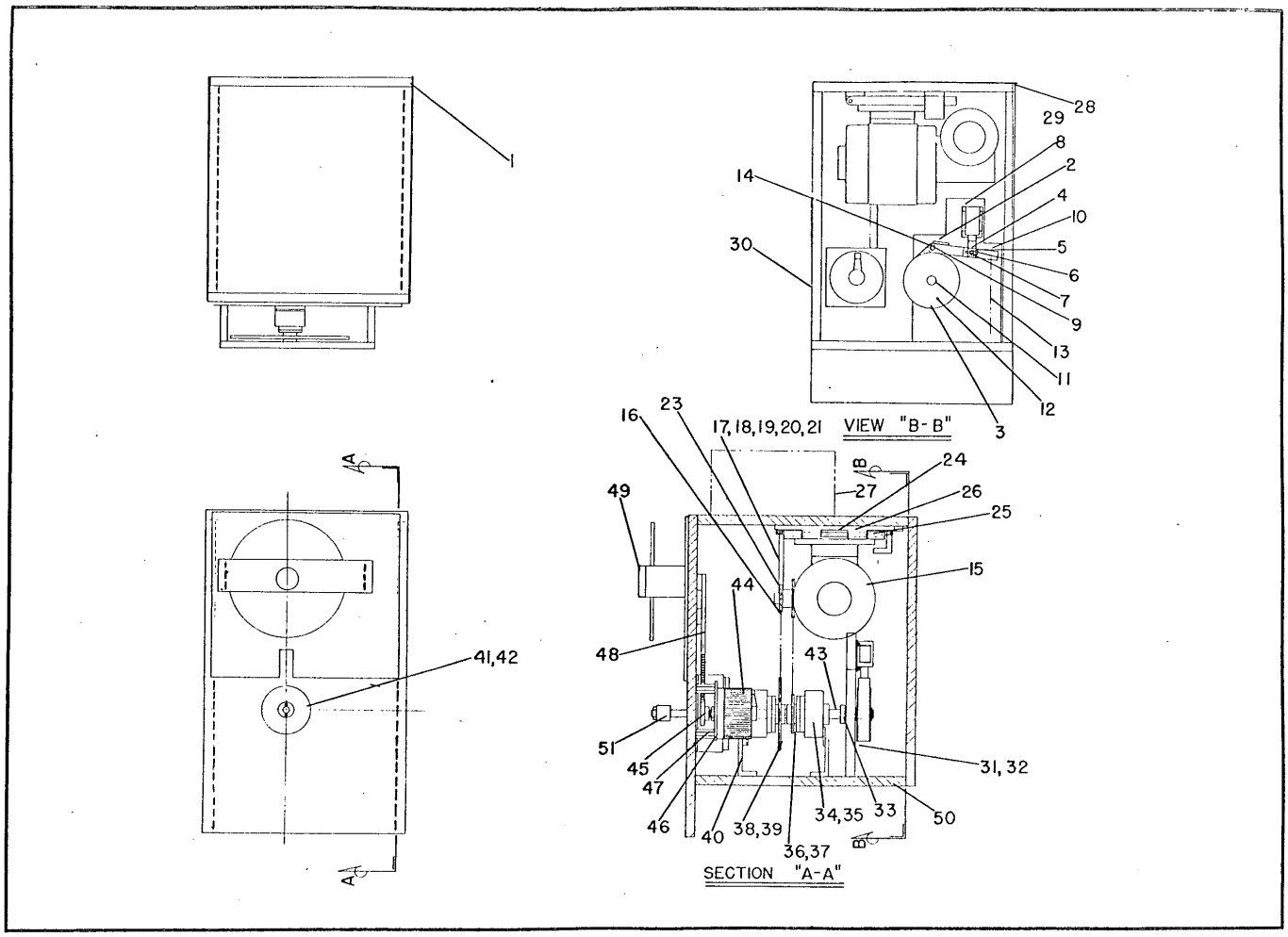

Figure 8-10. Drive Module, Upper Left Hand

Approved For Release 2005/02/17 : CIA-RDP78B04770A001600030001-2

Approved For Release 2005/02/17 : CIA-RDP78B04770A001600030001-2

FIG. & INDEX NO.	PART NUMBER	DESCRIPTION 1 2 3 4 5 6 7	UNITS PER ASSY	USABLE ON CODE
8-10	F5702	DRIVE MODULE, Upper left hand (See Index 28, Figure 8-7 for NHA)	1	
-1	D5720	. PLATE-REAR	1	
-2	A6327	. CLAMP-BELT	1	
-3	L6	. BELT, 5/8 Width (Globe Belting)	A/R	
-4	5144-18	. RETAINING RING (Waldes Kohinoor)	1	
-5	A6319	. PIN	1	
-6	A6318	. PIN-TIE	1	
-7	A6328	. BAR-TIE	1	
-8	16-CONT-115VAC	. SOLENOID (Guardian)	1	
-9	5144-25	. RETAINING RING (Waldes Kohinoor)	1	
-10	B6312	. ARM-STATIC BRAKE	1	
-11	5100-50-W	. RETAINING RING (Waldes Kohinoor)	2	
-12	B6321	. BRAKE WHEEL	1	
-13	F5702-11	. SPRING	1	
-14	A6317	. PIN-PIVOT	1	
-15	NSH-34RH	. MOTOR-GEARED, 40:1 Reduction, 1/15 H. P., 43 RPM; for use with Minarik Speed Control, Model SH-32	1	
-16	No. 25	. ROLLER CHAIN	A/R	
-17	F5702-18	. PIN-SPROCKET MOUNTING, Take-Up	1	
-18	F5702-19	. SPROCKET, Take-Up	1	
-19	S3K	. BEARING-SPROCKET, Take-Up	2	
-20	F5702-20	. SPACER, Take-Up	1	
-21	F5702-21	. PLATE-MOUNTING, Take-Up sprocket	1	
-22	F5702-10	. SPROCKET-DOUBLE, Motor	1	
-23	F5702-9	. TAKE-UP BRACKET, Drive	1	
-24	F5702-12	. PIN-MOUNTING PLATE, Motor	1	
-25	F5702-13	. PLATE-MOUNTING, Motor	1	
-26	F5702-14	. BRACKET-PIVOT, Mounting plate, Motor	1	
-27	F5702-8	. MOTOR CONTROL ASSEMBLY	1	
-28	F5702-2	. PLATE-TOP	1	
-29	D5598	. PLATE-SIDE	1	
-30	D5599	. PLATE-SIDE, Mounting	1	
-31	F5702-16	. PLATE-MOUNTING, Static brake	1	
-32	S5K	. BEARING (The Fafnir Bearing Co.)	1	
-33	F5702-17	. COLLAR-BEARING	1	
-34	303S	. CLUTCH COUPLING, Bearing mounted, 1/2 bore (Eaton Manufacturing Co.)	2	
-35	F5702-22	. SPACER-CLUTCH	2	
-36	F5702-23	. SPROCKET-CLUTCH, Fast speed	1	
-37	S5KPP	. BALL BEARING (The Fafnir Bearing Co.)	2	
-38	F5702-24	. SPROCKET-CLUTCH, Slow speed	1	
-39	S5KPP	. BALL BEARING	2	
-40	F5702-25	. ANGLE-TIE, Clutch	2	
-41	B5628	. BEARING CARTRIDGE-FRONT	1	
-42	203NPP	. BALL BEARING (The Fafnir Bearing Co.)	1	
-43	F5702-27	. SHAFT-DRIVE	1	
-44	100BU	. VARIABLE TRANSFORMER (Standard Electrical Products)	1	
-45	Y3240	. GEAR (Boston Gear Works)	1	

Approved For Release 2005/02/17 : CIA-RDP78B04770A001600030001-2

Approved For Release 2005/02/17 : CIA-RDP78B04770A001600030001-2

FIG. & INDEX NO.	PART NUMBER	DESCRIPTION 1 2 3 4 5 6 7	UNITS PER ASSY	USABLE ON CODE
8-10 -46	F5702-28	. PLATE-MOUNTING, Variac	1	
-47	A5644	. STANDOFF-PLATE	3	
-48	F5702-29	. RACK	1	
-49	F6256	. INDEX ASSEMBLY - RAW STOCK, See Figure 8-11	1	
-50	D5602	. PLATE-BOTTOM	1	
-51	F5702-31	. COLLAR-DRIVE	1	

Approved For Release 2005/02/17 : CIA-RDP78B04770A001600030001-2

Approved For Release 2005/02/17 : CIA-RDP78B04770A001600030001-2

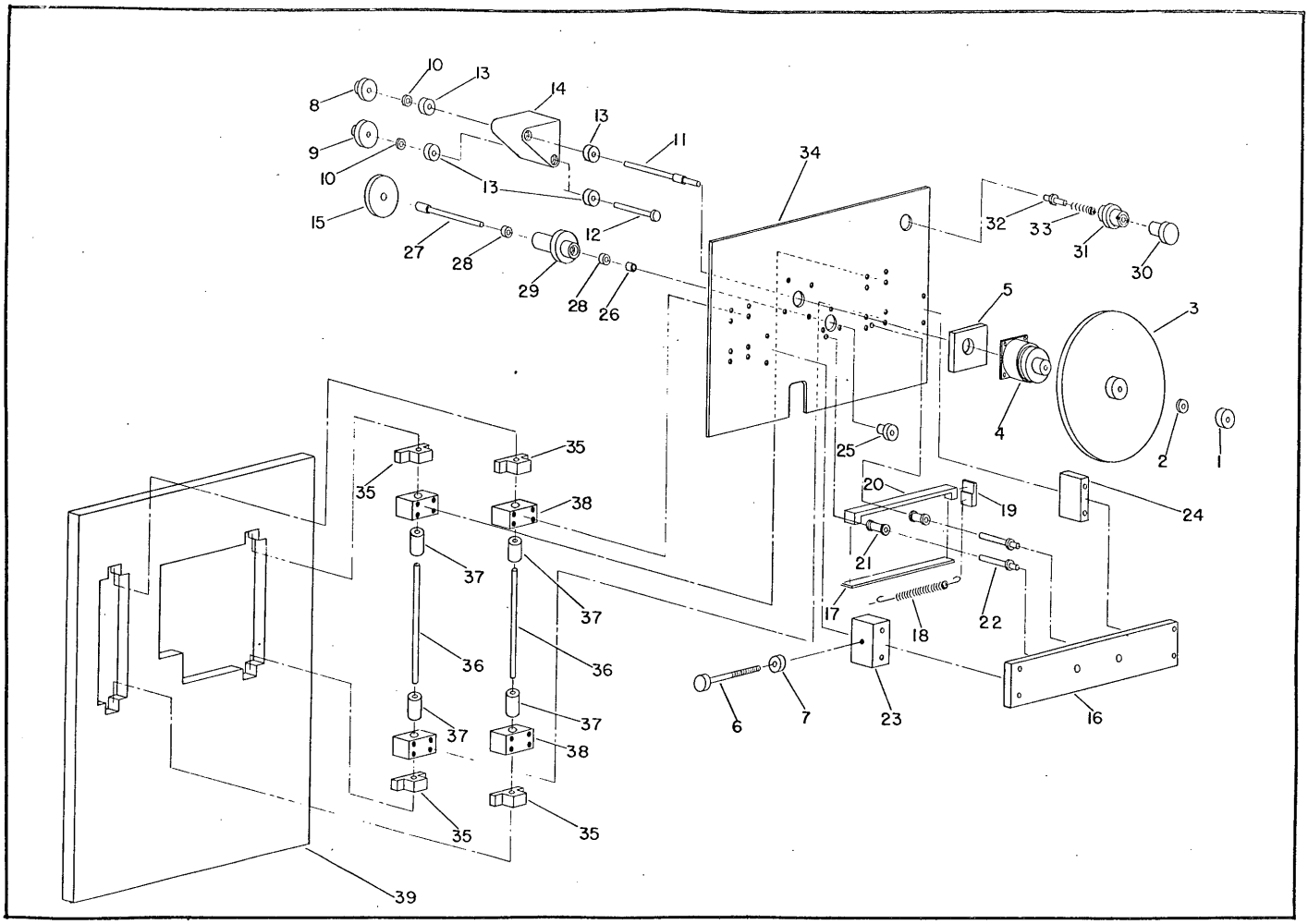

Figure 8-11. Index Assembly, Raw stock

Approved For Release 2005/02/17 : CIA-RDP78B04770A001600030001-2

Approved For Release 2005/02/17 : CIA-RDP78B04770A001600030001-2

FIG. & INDEX NO.	PART NUMBER	DESCRIPTION 1 2 3 4 5 6 7	UNITS PER ASSY	USABLE ON CODE
8-11	F6256	INDEX ASSEMBLY, Raw stock (See Index , Figure 8-10 .. for NHA)	1	
-1	F6256-31	. COLLAR	1	
-2	F6256-30	. SPACER	1	
-3	F6256-29	. WHEEL ASSEMBLY-METERING	1	
-4	I-25510	. CLUTCH (1/4" Armature hub bore, 3/8" Rotor bore; 28 Volts D.C., and release spring) - Warner Electric	1	
-5	F6256-4	. SPACER-CLUTCH	1	
-6	F6256-48	. SCREW-ADJUSTMENT	1	
-7	F6256-49	. NUT-LOCKING	1	
-8	Y3232	. GEAR-DRIVE (Boston Gear Works)	1	
-9	Y3240	. GEAR-IDLER (Boston Gear Works)	1	
-10	F6256-10	. SPACER, Gear	2	
-11	F6256-9	. SHAFT-METERING WHEEL	1	
-12	F6256-14	. SHAFT-IDLER	1	
-13	S1K7	. BALL BEARING (The Fafnir Bearing Co.)	4	
-14	F6256-5	. SUPPORT BLOCK, Bearing	1	
-15	Y3264	. GEAR-DRIVEN (Boston Gear Works)	1	
-16	F6256-23	. PLATE-RACK SUPPORT	1	
-17	F6256-26	. PLATE-KEEPER, Rack	1	
-18	F6256-13	. SPRING-RACK RETURN	1	
-19	F6256-27	. PLATE-ANCHOR, Spring	1	
-20	F6256-28	. RACK	1	
-21	F6256-50	. ROLLER-RACK	2	
-22	F6256-22	. SHAFT-BEARING SUPPORT	2	
-23	F6256-25	. PLATE-SPACER	1	
-24	F6256-29	. PLATE-SPACER	1	
-25	Y3224	. PINION (Boston Gear Works)	1	
-26	F6256-17	. SPACER-PINION	1	
-27	F6256-15	. SHAFT, Gear-driven	1	
-28	33K5	. BALL BEARING (The Fafnir Bearing Co.)	2	
-29	F6256-6	. SUPPORT BLOCK, Bearing	1	
-30	F6256-51	. KNOB-LATCH	1	
-31	F6256-53	. BRACKET-MOUNTING, Latch	1	
-32	F6256-52	. SHAFT-LATCH	1	
-33	F6256-54	. SPRING-LATCH	1	
-34	F6256-3	. PLATE-SUPPORT, Index assembly	1	
-35	F6256-32	. BLOCK-SUPPORT, Shaft	4	
-36	F6256-33	. SHAFT, Ball bushing	2	
-37	XA-61014	. BALL BUSHING	4	
-38	F6256-7	. BLOCK-BUSHING, Linear	1	
-39	F6256-2	. PLATE-FRONT, Module	1	

Approved For Release 2005/02/17 : CIA-RDP78B04770A001600030001-2

Approved For Release 2005/02/17 : CIA-RDP78B04770A001600030001-2

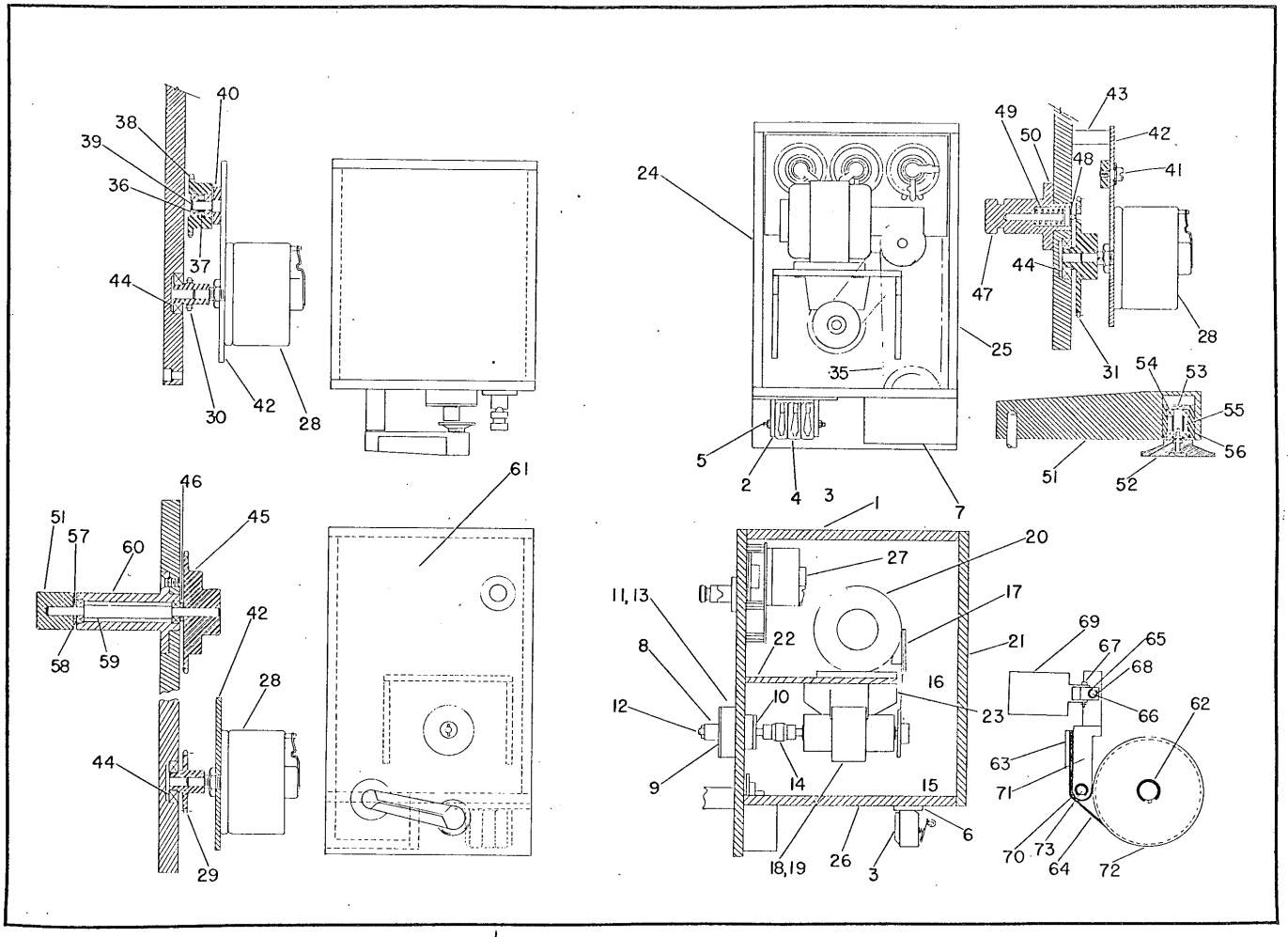

Figure 8-12. Drive Module-Upper Right Hand

Approved For Release 2005/02/17 : CIA-RDP78B04770A001600030001-2

Approved For Release 2005/02/17 : CIA-RDP78B04770A001600030001-2

FIG. & INDEX NO.	PART NUMBER	DESCRIPTION 1 2 3 4 5 6 7	UNITS PER ASSY	USABLE ON CODE
8-12	F5703	DRIVE MODULE-UPPER RIGHT HAND (See Index 54, Figure 8-7 for NHA)	1	
-1	D5719	. PLATE-TOP	1	
	B6101	. SWITCH ASSEMBLY	1	
-2	A6082	. . STANDOFF-MOUNTING, Switch	2	
-3	A6170	. . INSERT-FISHPAPER	4	
-4	DT-2RV22-A7	. . SWITCH (Micro Switch Co.)	3	
-5	A6099	. . STUD-CONNECTOR	1	
-6	B6083-2	. . BAR-MOUNTING	1	
-7	F5703-16	. BLOCK-COVER, Sprocket	1	
-8	B5626	. COLLAR-DRIVE, Spool	1	
-9	A6286	. CAP-FRONT, Bearing block	1	
-10	A6287	. CAP-REAR, Bearing block	1	
-11	S3KDD	. BALL BEARING (The Fafnir Bearing Co.)	2	
-12	A6279	. SHAFT, Film spool	1	
-13	B6285	. BEARING BLOCK	1	
-14	J-1211-2	. FLEXIBLE COUPLING	1	
-15	B6306	. SPROCKET-CLUTCH	1	
-16	25	. ROLLER CHAIN	A/R	
-17	B6305	. SPROCKET	1	
-18	B6307	. SPACER-CLUTCH	1	
-19	1NC90B	. MAGNE-CLUTCH	1	
-20	NS1-33R	. MOTOR-WORM GEAR TYPE (Drive shaft position opposite # 1 with rotor shaft seal, 173 RPM output; 115 VAC, 11.9 in-lbs torque, 1/20 H. P. (Bodine Electric Co.)	1	
-21	D5720	. PLATE-REAR	1	
-22	D6255	. PLATE-TABLE, Drive	1	
-23	D6249	. GUSSET-TABLE, Drive	2	
-24	D5598	. PLATE-SIDE	1	
-25	D5599	. PLATE-SIDE, Mounting	1	
-26	D5602	. PLATE-BOTTOM	1	
-27	F5670	. MODULE-CONTROL ASSEMBLY	1	
-28	100BU	. . VARIABLE TRANSFORMER (Standard Electrical Products)	3	
-29	B5634	. . SPROCKET	1	
-30	B5633	. . SPROCKET	1	
-31	B5635-2	. . SPROCKET	1	
-32	A5632	. . SPRING-TENSION	1	
-33	A5663	. . PIN-RETAINING, Spring	1	
-34	A5976	. . PIN-RETAINING, Spring	1	
-35	25	. . CHAIN-ROLLER	A/R	
	B5658	. . TENSION ARM ASSEMBLY	1	
-36	MMS1K7	. . . BALL BEARING (The Fafnir Bearing Co.)	2	
-37	A5648	. . . SPACER-BEARING	1	
-38	B5637	. . . SPROCKET	1	
-39	A5649	. . . SHAFT-ARM	1	
-40	B5650	. . . ARM-TENSION	1	
-41	4327	. . SCREW-SHOULDER (PIC)	1	
-42	B5646	. . PLATE-MOUNTING, Transformer	1	
-43	A5644	. . STANDOFF-PLATE	11	
-44	MMS5K	. . BEARING (The Fafnir Bearing Co.)	3	
-45	B5636	. . SPROCKET	1	
-46	A5662	. . SPACER	2	
	B5656	. . LATCHING ASSEMBLY	1	
-47	A5642	. . . KNOB	1	
-48	A5643	. . . POST-SPRING	1	
-49	A5631	. . . SPRING	1	
-50	A5641	. . . POST	1	
	B5665	. . GUIDE ARM ASSEMBLY	1	

Approved For Release 2005/02/17 : CIA-RDP78B04770A001600030001-2

Approved For Release 2005/02/17 : CIA-RDP78B04770A001600030001-2

FIG. & INDEX NO.	PART NUMBER	DESCRIPTION 1 2 3 4 5 6 7	UNITS PER ASSY	USABLE ON CODE
8-12-51	B5655	. . . ARM-GUIDE	1	
	B5657	. . . GUIDE WHEEL ASSEMBLY	1	
-52	B5654	. . . . WHEEL-ARM, Guide	1	
-53	A5652	. . . . PIN-BEARING	1	
-54	MMS1K7	. . . . BEARING (The Fafnir Bearing Co.)	2	
-55	A5653	. . . . SPACER-BEARING	1	
-56	A5651	. . . . CARTRIDGE-BEARING	1	
-57	A5662	. . . WASHER-SPACER	1	
-58	MMS1K7	. . . BEARING (The Fafnir Bearing Co.)	2	
-59	A5640	. . . SHAFT-ARM, Guide	1	
-60	B5645	. . . POST-ARM, Guide	1	
-61	F5647	. . PLATE-FRONT, Module	1	
-62	5100-50-W	. RETAINING RING (Waldes Kohinoor)	2	
-63	A6327	. CLAMP-BELT	1	
-64	L6	. BELT, 5/8 Width (Globe Belting)	A/R	
-65	5144-18	. RETAINING RING (Waldes Kohinoor)	1	
-66	A6319	. PIN	1	
-67	A6318	. PIN-TIE	1	
-68	A6328	. BAR-TIE	1	
-69	16-CONT-115VAC	. SOLENOID (Guardian)	1	
-70	5144-25	. RETAINING RING (Waldes Kohinoor)	1	
-71	B6312	. ARM-STATIC BRAKE	1	
-72	B6321	. BRAKE WHEEL	1	
-73	A6317	. PIN-PIVET	1	

Approved For Release 2005/02/17 : CIA-RDP78B04770A001600030001-2

Approved For Release 2005/02/17 : CIA-RDP78B04770A001600030001-2

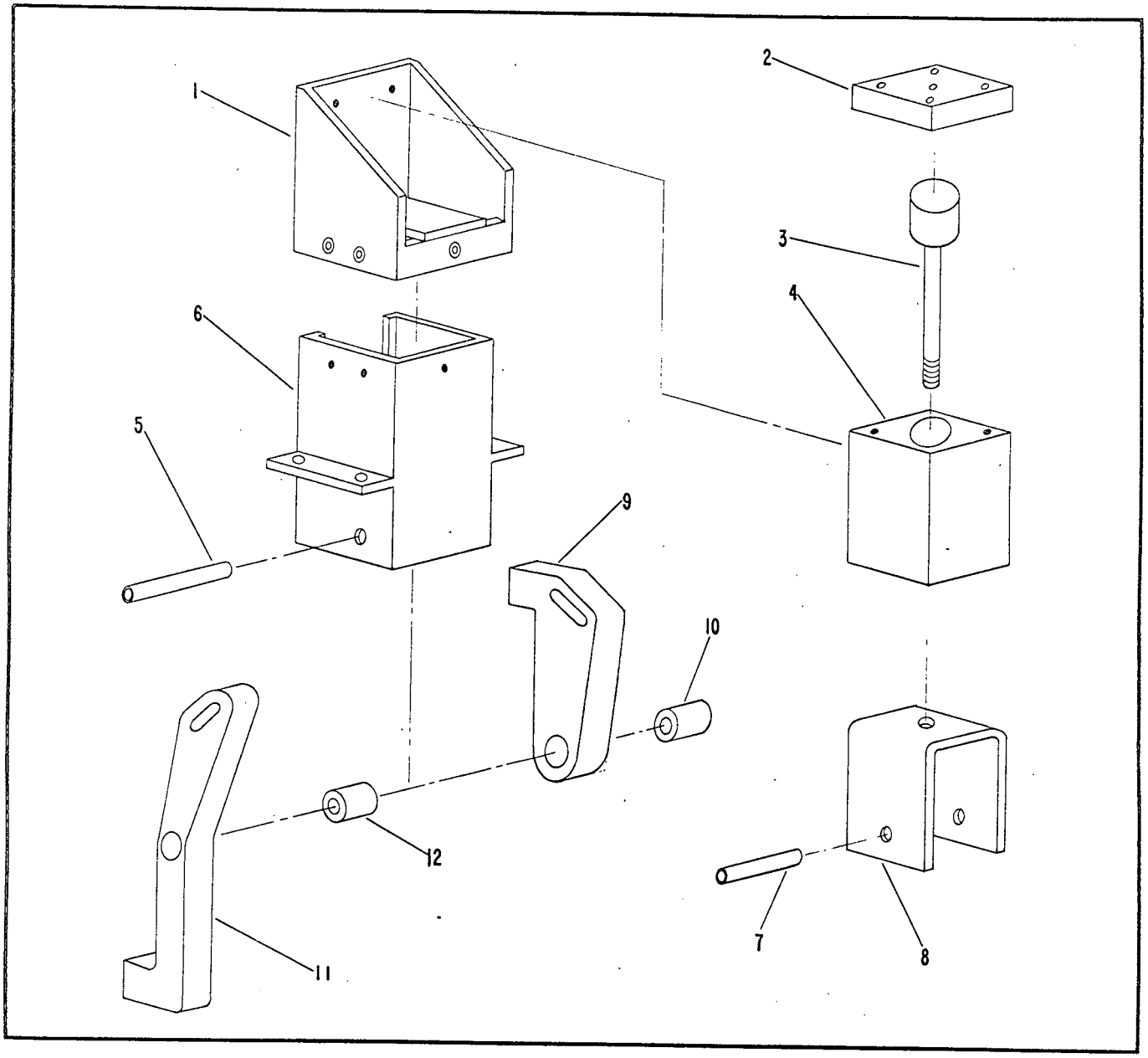

Figure 8-13. Latch Assembly, left hand

FIG. & INDEX NO.	PART NUMBER	DESCRIPTION 1 2 3 4 5 6 7	UNITS PER ASSY	USABLE ON CODE
8-13	D5772-3	LATCH ASSEMBLY, Left hand (See Index 60, Figure 8-7) ..	1	
	D5772-4	LATCH ASSEMBLY, Left hand (See Index 61, Figure 8-7) ..	1	
-1	D5996	. HOUSING-UPPER	2	
	D6141-1	. CYLINDER ASSEMBLY-AIR (Used on D5772-3).....	1	
	D6141-3	. CYLINDER ASSEMBLY-AIR (Used on D5772-4).....	1	
-2	A6138	. . CAP-CYLINDER	2	
-3	A6135	. . PLUNGER-CYLINDER	2	
-4	A6140-2	. . BODY-CYLINDER (Used on D6141-1)	1	
	A6140-1	. . BODY-CYLINDER (Used on D6141-3)	1	
-5	COMM	. DOWEL PIN, .2501/.2503 dia. by 1-1/2" lg., steel	2	
-6	D5808	. HOUSING-LOWER	2	

Approved For Release 2005/02/17 : CIA-RDP78B04770A001600030001-2

Approved For Release 2005/02/17 : CIA-RDP78B04770A001600030001-2

FIG. & INDEX NO.	PART NUMBER	DESCRIPTION 1 2 3 4 5 6 7	UNITS PER ASSY	USABLE ON CODE
8-13 -7	COMM	. DOWEL PIN, .2501/.2503 dia. by 1-1/4" lg., steel	2	
-8	B5812	. ACTUATOR-LATCH	2	
-9	B5811	. LATCH BAR ASSEMBLY, Upper	2	
-10	B5811-2	. . BUSHING	2	
-11	B5810	. LATCH BAR ASSEMBLY, Lower	2	
-12	B5810-2	. . BUSHING	2	

Approved For Release 2005/02/17 : CIA-RDP78B04770A001600030001-2

Approved For Release 2005/02/17 : CIA-RDP78B04770A001600030001-2

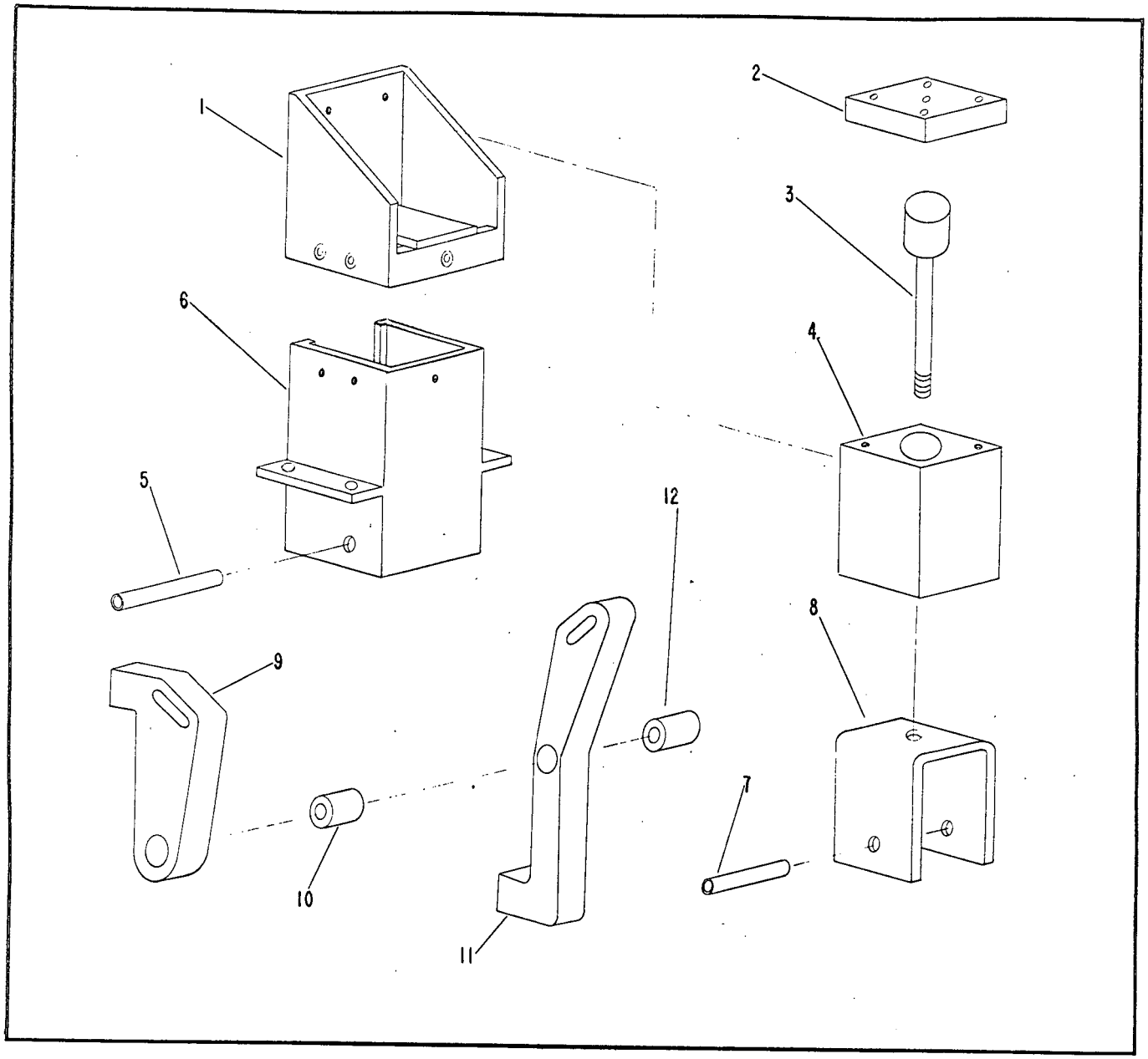

Figure 8-14. Latch Assembly, right hand

FIG. & INDEX NO.	PART NUMBER	DESCRIPTION 1 2 3 4 5 6 7	UNITS PER ASSY	USABLE ON CODE
8-14	D5772-1	LATCH ASSEMBLY, Right hand (See Index 79, Figure 8-7 .. for NHA)	1	
	D5772-2	LATCH ASSEMBLY, Right hand (See Index 78, Figure 8-7 .. for NHA)	1	
-1	D5996	. HOUSING-UPPER	2	
	D6141-2	. CYLINDER ASSEMBLY (Used on D5772-1)	1	
	D6141-1	. CYLINDER ASSEMBLY (Used on D5772-2)		
-2	B6139	. . CAP-CYLINDER (Used on D6141-2).....	1	
	A6138	. . CAP-CYLINDER (Used on D6141-1).....	1	
-3	A6135	. . PLUNGER-CYLINDER	2	
-4	A6140-1	. . BODY-CYLINDER (Used on D6141-1)	1	

Approved For Release 2005/02/17 : CIA-RDP78B04770A001600030001-2

Approved For Release 2005/02/17 : CIA-RDP78B04770A001600030001-2

FIG. & INDEX NO.	PART NUMBER	DESCRIPTION 1 2 3 4 5 6 7	UNITS PER ASSY	USABLE ON CODE
8-14	A6140-2	. . BODY-CYLINDER (Used on D6141-1)	2	
-5	COMM	. DOWEL PIN, .2501/.2503 dia. by 1-1/2" lg., steel	2	
-6	D5808	. HOUSING-LOWER	2	
-7	COMM	. DOWEL PIN, .2501/.2503 dia. by 1-1/4" lg., steel	2	
-8	B5812	. ACTUATOR-LATCH	2	
-9	B5811	. LATCH BAR ASSEMBLY, Upper	2	
-10	B5811-2	. . BUSHING	2	
-11	B5810	. LATCH BAR ASSEMBLY, Lower	2	
-12	B5810-2	. . BUSHING	2	

Approved For Release 2005/02/17 : CIA-RDP78B04770A001600030001-2

Approved For Release 2005/02/17 : CIA-RDP78B04770A001600030001-2

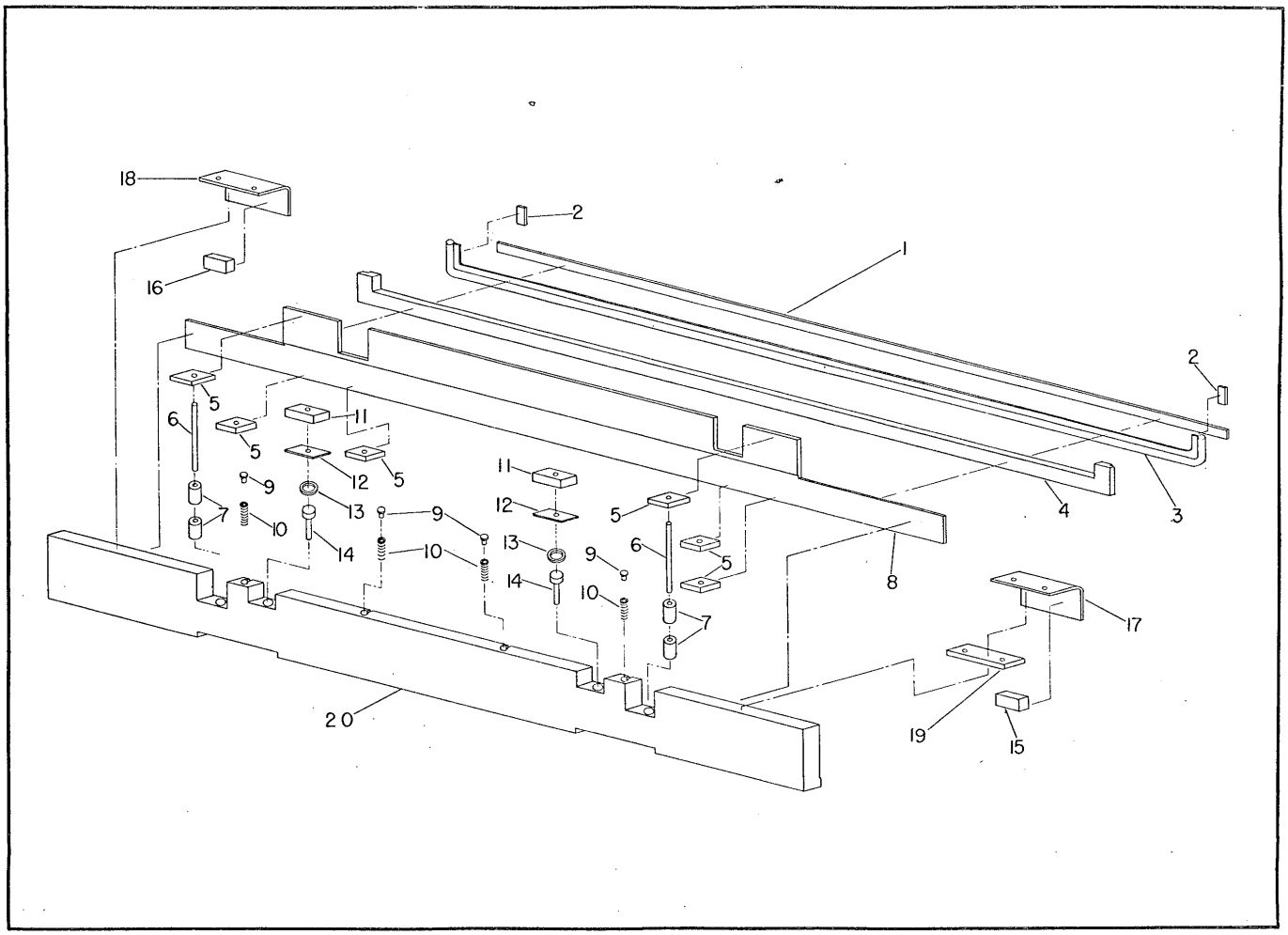

Figure 8-15. Seal Light Center

Approved For Release 2005/02/17 : CIA-RDP78B04770A001600030001-2

Approved For Release 2005/02/17 : CIA-RDP78B04770A001600030001-2

FIG. & INDEX NO.	PART NUMBER	DESCRIPTION 1 2 3 4 5 6 7	UNITS PER ASSY	USABLE ON CODE
8-15	F6181	SEAL-LIGHT, Center (See Index 90, Figure 8-7 for NHA)...	1	
-1	F6181-8	. BAR-CLAMP, Seal, bottom	1	
-2	F6181-7	. BAR-CLAMP, Seal, side	2	
-3	F6181-14	. INNERSEAL GASKET	1	
-4	F6181-6	. SPACER -SEAL	1	
-5	F6181-3	. BLOCK-SUPPORT, Shaft	6	
-6	F6181-4	. SHAFT	2	
-7	XA-4812	. BALL BUSHING	4	
-8	F6181-2	. PLATE-SUPPORT, Seal	1	
-9	F6181-22	. CAP-SPRING	4	
-10	F6181-23	. SPRING	4	
-11	A6354	. COVER-CYLINDER	2	
-12	A6355	. GASKET-CYLINDER	2	
-13	F6181-19	. O-RING	2	
-14	F6181-17	. ROD-PLUNGER, Cylinder	2	
-15	F6181-24	. SWITCH, Right hand	1	
-16	F6181-25	. SWITCH, Left hand	1	
-17	F6181-26	. PLATE-MOUNT, Switch, R.H.	1	
-18	F6181-27	. PLATE-MOUNT, Switch, L.H.	1	
-19	F6181-29	. SPACER-SWITCH MOUNTING PLATE	1	
-20	F6364	. BAR-BRACING, Upper drive frame	1	

Approved For Release 2005/02/17 : CIA-RDP78B04770A001600030001-2

Approved For Release 2005/02/17 : CIA-RDP78B04770A001600030001-2

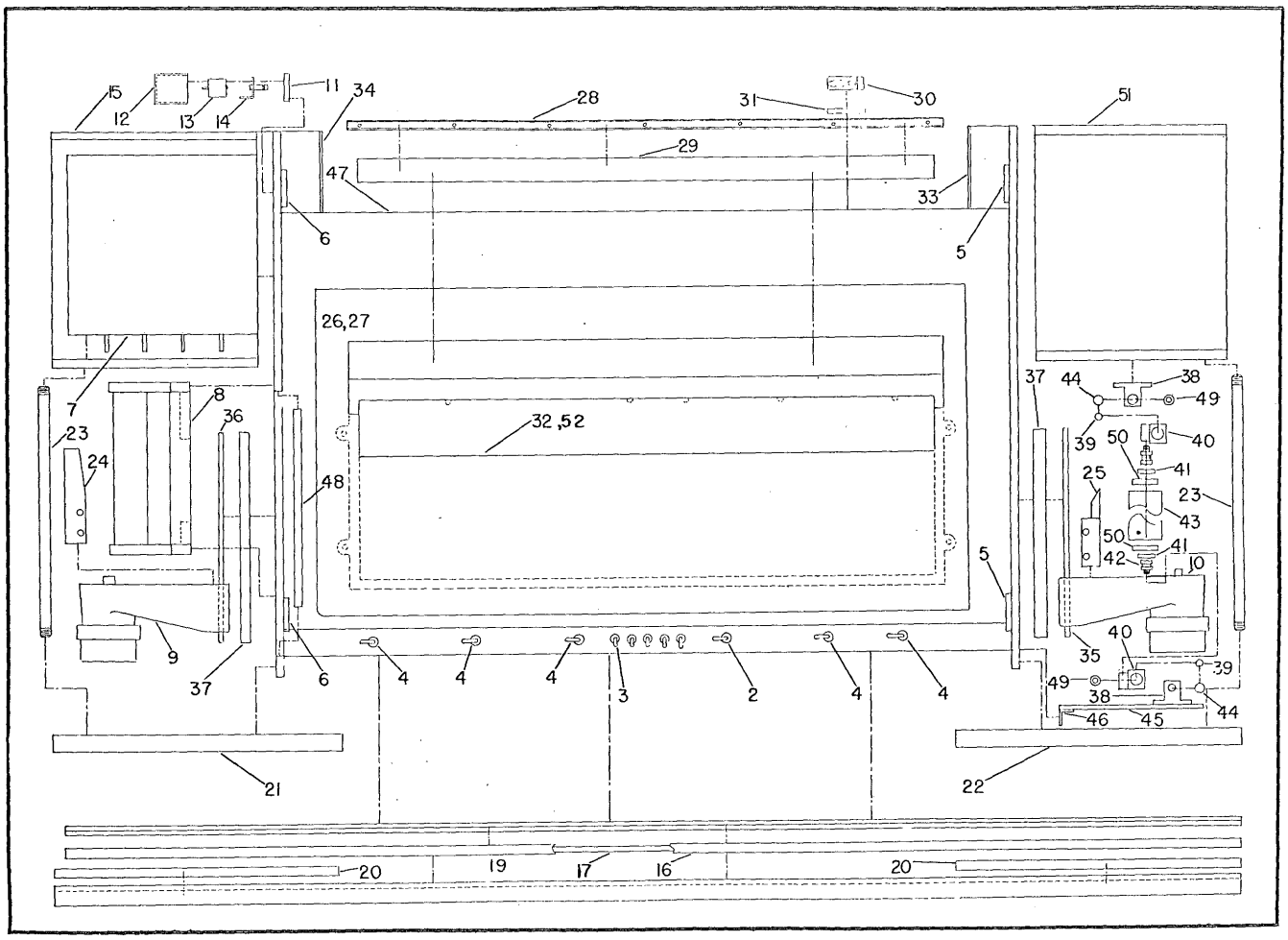

Figure 8-16. Assembly-Lower Drive

Approved For Release 2005/02/17 : CIA-RDP78B04770A001600030001-2

Approved For Release 2005/02/17 : CIA-RDP78B04770A001600030001-2

FIG. & INDEX NO.	PART NUMBER	DESCRIPTION 1 2 3 4 5 6 7	UNITS PER ASSY	USABLE ON CODE
8-16	F5693	ASSEMBLY-LOWER DRIVE (See Index 23, Figure 8-1 for NHA)	1	
-1	D5696	. PLATE-SWITCH	1	
-2	8869-K2	. SWITCH (Cutler-Hammer)	1	
-3	5480K7	. SWITCH (Birnbach)	1	
-4	8363	. SWITCH (Cutler-Hammer)	5	
-5	B5740	. PLATE-RIGHT HAND LOWER LATCH	2	
-6	B5700	. PLATE-LEFT HAND LOWER LATCH	2	
-7	F6365	. FRAME SEPARATION DETECTOR (See Figure 8-18)	1	
-8	F6366	. SENSOR MOUNTING, F. S. D. (See Figure 8-19)	1	
-9	D5539-2	. ASSEMBLY, Tail stock (See Figure 8-9)	1	
-10	D5539-1	. ASSEMBLY, Tail stock (See Figure 8-9)	1	
-11	B6129	. BLOCK-MOUNTING	4	
-12	B6122	. COVER-SWITCH	4	
-13	DT-2R-A7	. SWITCH (Micro Switch Co.)	4	
-14	MB2731A	. ACTUATOR (Micro Switch Co.)	4	
-15	F5704	. DRIVE MODULE, Left hand (See Figure 8-20)	1	
	B6235	. SEAL ASSEMBLY, Handle		
-16	B6236	. . TUBE-SEAL	1	
-17	B6237	. . CORE-SEAL	1	
-18	D5891	. BAR-RETAINING, Seal	1	
-19	F5876	. HANDLE-LOWER	1	
-20	B5767	. SPACER-PANEL	2	
-21	D5781-2	. PANEL-FRONT, Left hand	1	
-22	D5781-1	. PANEL-FRONT, Right hand	1	
-23	B5737	. ROD-PANEL TIE	2	
-24	B6027	. CAM-PROGRAMMING, Left hand	1	
-25	B5699	. CAM-PROGRAMMING, Right hand	1	
-26	D5754	. FRAME ASSEMBLY, Clear platen	1	
-27	F6062	. ASSEMBLY-RESEAU PIN AND NEGATIVE CLAMP (See Figure 8-22)	1	
-28	B6091	. CLAMP-NEOPRENE	1	
-29	B6092	. PROTECTIVE NEOPRENE	1	
-30	DT-2RV22-A7	. SWITCH (Micro Switch Co.)	1	
-31	B6161	. BLOCK-MOUNTING, Platen down switch	1	
-32	D6118-1	. MASK-RESEAU, 2.50 x 29.81	1	
	D6118-2	. MASK-RESEAU, 4.65 x 27.00	1	
	D6118-3	. MASK-RESEAU, 4.70 x 6.03	1	
	D6118-4	. MASK-RESEAU, 9.30 x 18.00	1	
-33	D5801-1	. PLATE ACCESS COVER, Right hand	1	
-34	D5801-2	. PLATE ACCESS COVER, Left hand	1	
-35	D5730-1	. PLATE-TOP, Right hand spool support	1	
-36	D5730-2	. PLATE-TOP, Left hand spool support	1	
-37	B5734	. PLATE-BOTTOM, Spool support	2	
-38	B6303	. BLOCK-SUPPORT, Shaft	4	
-39	A6261	. SHAFT-BEARING, Dance roll	2	
-40	B6263-1	. BLOCK-BEARING	2	
-41	A6276	. COLLAR-DANCE ROLL	1	
-42	B6264	. SHAFT-DANCE ROLL	1	
-43	D6275	. DANCE ROLL	1	
-44	A6277	. WASHER-RUBBER	4	
-45	D6258	. PLATE-SUPPORT ROLL	1	
-46	B6260	. ANGLE-SUPPORT	1	
-47	D5697	. PLATE-RESEAU BASE	1	
-48	F6366-18	. BLOCK-ANTI SCRATCH, Teflon	1	
-49	XA-61014	. LINEAR BALL BEARING (Thompson Industries, Inc.)	4	
-50	S3KDD	. BALL BEARING (The Fafnir Bearing Co.)	2	
-51	F5705	. DRIVE MODULE-LOWER, Right hand (See figure 8-21)	1	
-52	D6131-1	. MASK-AUTOMATIC PRINTING, 2.50 x 29.81	1	
	D6131-2	. MASK-AUTOMATIC PRINTING, 4.65 x 27.00	1	
	D6131-3	. MASK-AUTOMATIC PRINTING, 4.70 x 6.03	1	
	D6131-4	. MASK-AUTOMATIC PRINTING, 9.30 x 18.00	1	

Approved For Release 2005/02/17 : CIA-RDP78B04770A001600030001-2

Approved For Release 2005/02/17 : CIA-RDP78B04770A001600030001-2

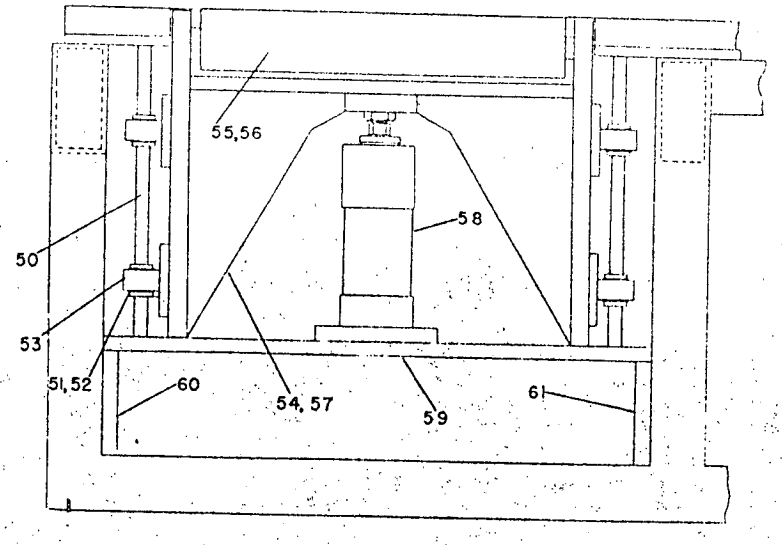

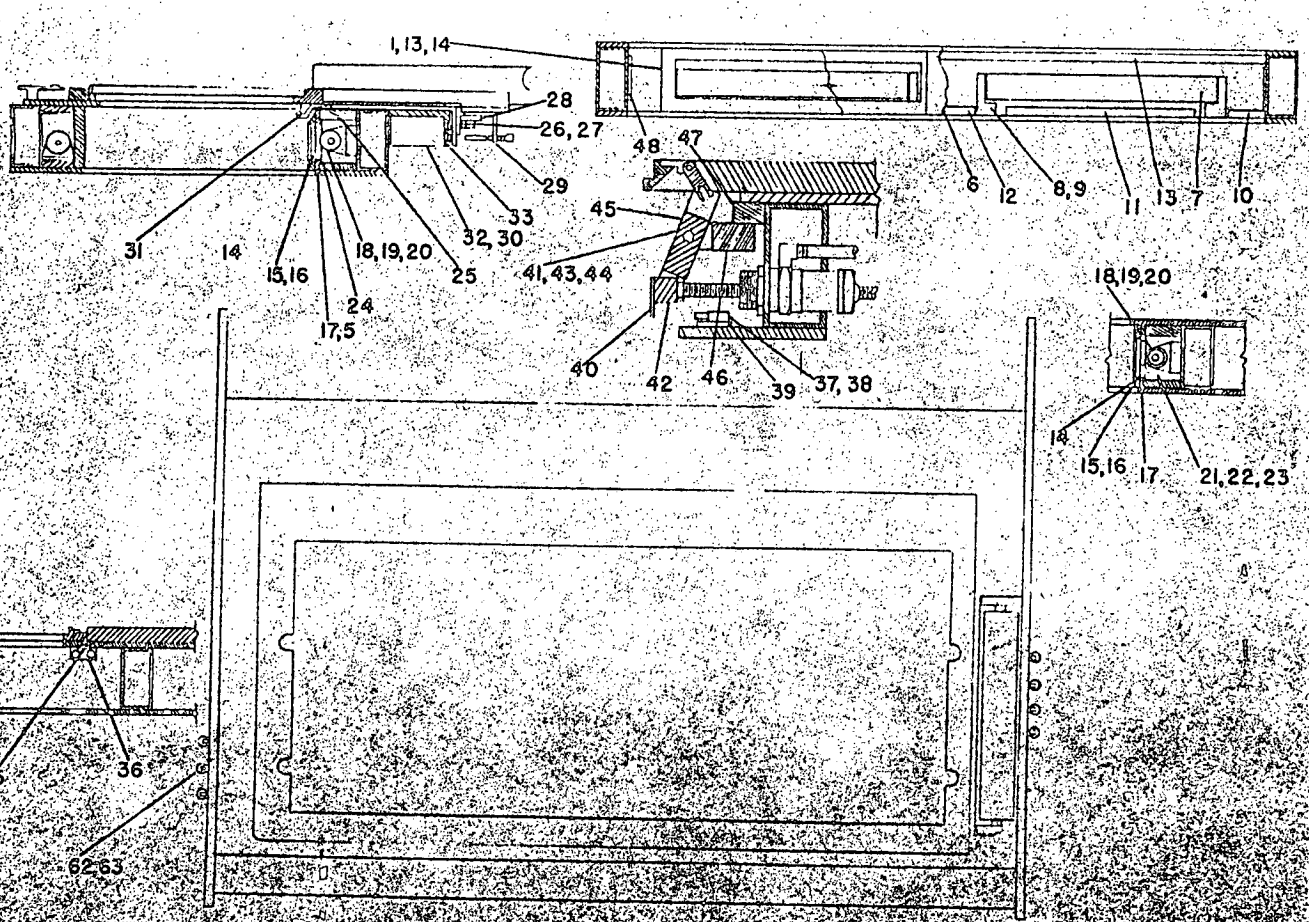

Figure 5-17. Lower Drive Assembly

Approved For Release 2005/02/17 : CIA-RDP78B04770A001600030001-2

Approved For Release 2005/02/17 : CIA-RDP78B04770A001600030001-2

FIG. & INDEX NO.	PART NUMBER	DESCRIPTION 1 2 3 4 5 6 7	UNITS PER ASSY	USABLE ON CODE
8-17	F5693	LOWER DRIVE ASSEMBLY, Miscellaneous units dis- assembled (See figure 8-16)	1	
-1	B5814	. FRAME-VIEWING LAMP GLASS	2	
-2	B5815	. GASKET	2	
-3	B5816	. GLASS-VIEWING LAMP	4	
-4	B5817	. FILTER-VIEWING LAMP	2	
-5	B5818	. GASKET-BOTTOM	2	
-6	D5589	. PLATE-MOUNTING, Viewing light window	1	
-7	L40/IF	. LAMP-LUMILINE (General Electric Co.)	2	
-8	49X622	. CAP-LUMILINE LAMPHOLDER (General Electric Co.)	4	
-9	49X616	. BASE-LUMILINE LAMPHOLDER (General Electric Co.)	4	
-10	B5806	. SPACER-END	2	
-11	B5804	. SPACER-LIGHT SEAL	2	
-12	B5805	. SPACER-MIDDLE	2	
-13	D5807	. SPACER-TOP		
-14	D5947	. FRAME-VIEWING	1	
-15	F5693-154	. GLASS	2	
-16	F5693-155	. FILTER	1	
-17	D5942	. PLATE-MOUNTING	1	
-18	L40/IF	. LAMP (General Electric Co.)	2	
-19	49X622	. CAP-LUMILINE LAMPHOLDER (General Electric Co.)	4	
-20	49X616	. BASE-LUMILINE LAMP (General Electric Co.)	4	
-21	B5941-1	. PLATE-END	1	
-22	B5941-2	. PLATE-END	1	
-23	2424	. GROMMET (Atlantic India Rubber Works)	2	
-24	D5954	. PLATE-MOUNTING, Lamp housing bottom	1	
-25	D5940	. PLATE-MOUNTING, Lamp housing top	1	
-26	1SX1-T	. SWITCH (Micro Switch Corp.)	10	
-27	JX25	. ACTUATOR (Micro Switch Corp.)	10	
-28	B5726	. BLOCK-MOUNTING, Switch	5	
-29	B6247	. BLOCK-STOP	5	
-30	A5621	. SPACER-PLUNGER, Solenoid	5	
-31	B5873	. LINK ASSEMBLY-ACTUATOR	5	
-32	13SD136	. SOLENOID	5	
-33	B5725	. BLOCK-MOUNTING, Solenoid	5	
-34	F5592	. PLATE-SUPPORT, Printing glass		
-35	1SX1-T	. SWITCH (Micro Switch Corp.)	2	
-36	B5966	. BLOCK-MOUNTING, Reseau switch	2	
-37	1SM1	. SWITCH (Micro Switch Corp.)	2	
-38	JS-5	. ACTUATOR (Micro Switch Corp.)	2	
-39	A6144	. BLOCK-MOUNTING, Micro switch	2	
-40	A6145	. PLATE-ACTUATOR	2	
-41	A6146	. BLOCK-STAND OFF	4	
-42	A6142	. BLOCK-THREADED	2	
-43	5144-18	. RETAINING RING (Waldes Kohinoor, Inc.)	4	
-44	A6147	. SHAFT-NEGATIVE CLAMP	2	
-45	B6074	. BAR-ACTIVATION, Negative clamp	2	
-46	B6143	. STAND-OFF, Actuator	2	
-47	A6163	. BLOCK-MOUNTING	2	
-48	B5799	. PLATE ACCESS	2	
-49	30301-0010	. CYLINDER (A. Schrader's Son)	2	
-50	A5915	. SHAFT-GUIDE	2	
	D5701	. ASSEMBLY-ROLLER, Right hand	1	
-51	W-375-SS	. RETAINING RING (Waldes Kohinoor, Inc.)	8	
-52	XA-61014	. . BEARING-BALL BUSHING	4	
-53	B5914	. . RETAINER-BEARING	7	
-54	B5707	. . FRAME-RIGHT HAND ROLLER BAR	1	
-55	MMS5K	. . BALL BEARING (The Fafnir Bearing Co.)	2	
-56	D5724-1	. . ROLLER	1	
-57	D5706	. . FRAME, Right hand roller	1	

Approved For Release 2005/02/17 : CIA-RDP78B04770A001600030001-2

Approved For Release 2005/02/17 : CIA-RDP78B04770A001600030001-2

FIG. & INDEX NO.	PART NUMBER	DESCRIPTION 1 2 3 4 5 6 7	UNITS PER ASSY	USABLE ON CODE
8-17 -58	30130	. CYLINDER (A. Schrader's Son)	1	
-59	B5620	. BRACE-CYLINDER	1	
-60	B5870	. PLATE-ATTACHMENT, Front	1	
-61	B5990	. PLATE-ATTACHMENT, Back	1	
-62	DT-2R-A7	. SWITCH (Micro Switch Corp.)	7	
-63	MD3211-Q-1	. ACTUATOR (Micro Switch Corp.)	7	

Approved For Release 2005/02/17 : CIA-RDP78B04770A001600030001-2

Approved For Release 2005/02/17 : CIA-RDP78B04770A001600030001-2

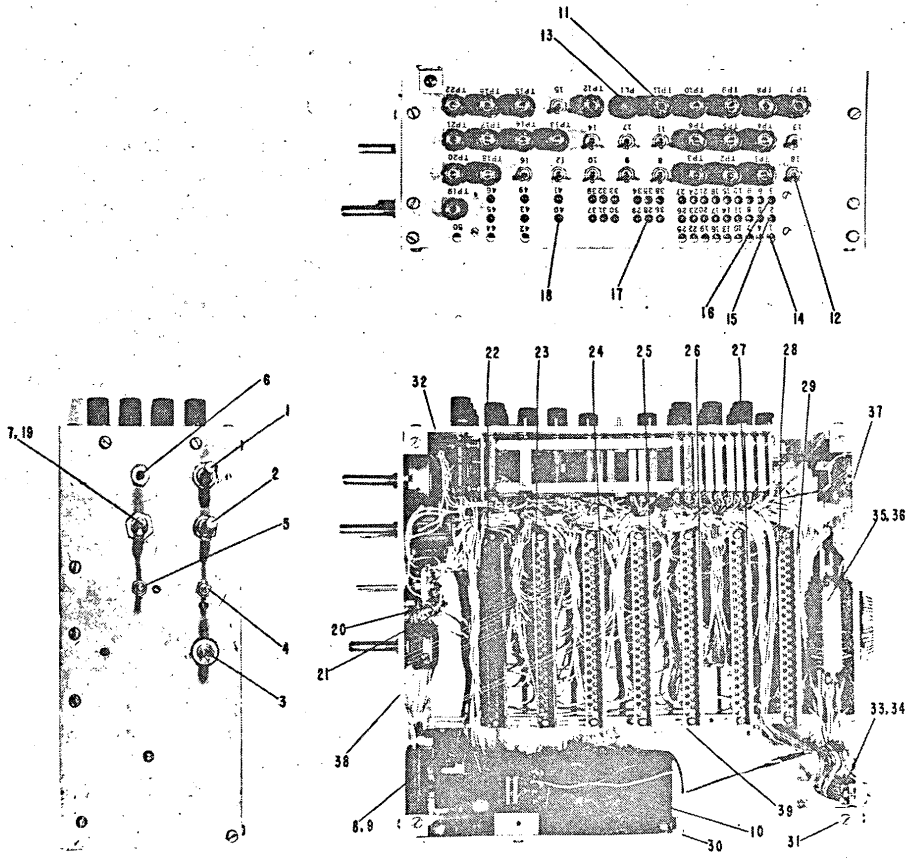

Figure 8-18. Frame Separation Detector

Approved For Release 2005/02/17 : CIA-RDP78B04770A001600030001-2

Approved For Release 2005/02/17 : CIA-RDP78B04770A001600030001-2

FIG. & INDEX NO.	PART NUMBER	DESCRIPTION 1 2 3 4 5 6 7	UNITS PER ASSY	USABLE ON CODE
8-18	F6365	FRAME SEPARATION DETECTOR (See Index 7, Figure 8-16. for NHA)	1	
-1	5K	. POTENTIOMETER, Type AB, RV 48 (Ohmite Mfg. Co.)	1	
-2	1K	. HELIPOT, Ten (10) turn; with counting dial and long shaft, RV 47 (Helipot Corp.)	1	
-3	2K	. POTENTIOMETER, Type AB, RV 46 (Ohmite Mfg. Co.)	1	
-4		. SWITCH, Single pole, Five (5) position rotary miniature, Non shorting, SW7	1	
-5		. SWITCH, Single pole, Three (3) position rotary, Non shorting, SW6	1	
-6		. SWITCH, Push button, Normally closed, SW4	1	
-7		. SWITCH, Single pole, Two (2) position rotary, SW5	1	
-8	2N2823	. TRANSISTOR	1	
-9		. HEAT SINK	1	
-10	PROPIMAX 2	. FAN (Rotron)	1	
-11	29-1	. BINDING POST, TP1 thru TP22 (Grayhill)	22	
-12	8867K4	. SWITCH-TOGGLE, SW8 thru SW18 (Cutler-Hammer)	11	
-13	7538	. PILOT LIGHT, PL1 (Dialco)	1	
-14	224L-1-501	. VARIABLE RESISTOR, 500 Ohm, RV1, 4, 7, 10, 13, 16, 19, 22, 25, 42, and RV43 (Bournes)	11	
-15	224L-1-502	. VARIABLE RESISTOR, 5K, 20 turn, RV2, 5, 8, 11, 14, 17, 20, 23, 26, 36, 37, 38, and RV39 (Bournes)	13	
-16	224L-2-104	. VARIABLE RESISTOR, 100K, 20 turn, RV3, 6, 9, 12, 15, 18, 21, 24, 27, 44, and RV45 (Bournes)	11	
-17	224L-1-202	. VARIABLE RESISTOR, 2K, 20 turn, RV28, 29, 30, 31, 32, 33, 34, 35, and RV50 (Bournes)	9	
-18	224L-1-103	. VARIABLE RESISTOR, 10K, 20 turn, RV40, RV41, and RV49 (Bournes)	3	
-19	170K	. RESISTOR, 5% Tolerence, 1/2 watt, R68	1	
-20	1.2K	. RESISTOR, 10% Tolerence, 1/4 watt, R89	1	
-21	1K	. RESISTOR, 5% Tolerence, 1/4 watt, R105	1	
-22	D6356	. COMPONENT BOARD NO. 1, See Figure 8-38	1	
-23	D6357	. COMPONENT BOARD NO. 2, See Figure 8-39	1	
-24	D6358	. COMPONENT BOARD NO. 3, See Figure 8-40	1	
-25	D6359	. COMPONENT BOARD NO. 4, See Figure 8-41	1	
-26	D6360	. COMPONENT BOARD NO. 5, See Figure 8-42	1	
-27	D6361	. COMPONENT BOARD NO. 6, See Figure 8-43	1	
-28	D6362	. COMPONENT BOARD NO. 7, See Figure 8-44	1	
-29	7024	. CONNECTOR, P1 thru P7 (ELCO)	7	
-30	F6365-3	. PLATE-SIDE, Right hand	1	
-31	F6365-7	. ANGLE BRACKET	4	
-32	F6365-5	. PLATE-SIDE, Left hand	1	
-33	DD-50P	. CONNECTOR, J8 (Cinch-Jones)	1	
-34	DD-50S	. CONNECTOR, (Cinch-Jones)	1	
-35		. CONNECTOR, J9 (Amphenol Electronics Corp.)	1	
-36		. CONNECTOR, (Amphenol Electronics Corp.)	1	
-37	F6365-4	. PLATE-BACK	1	
-38	F6365-6	. PLATE-FRONT	1	
-39	F6365-7	. PLATE-BOTTOM	1	

Approved For Release 2005/02/17 : CIA-RDP78B04770A001600030001-2

Approved For Release 2005/02/17 : CIA-RDP78B04770A001600030001-2

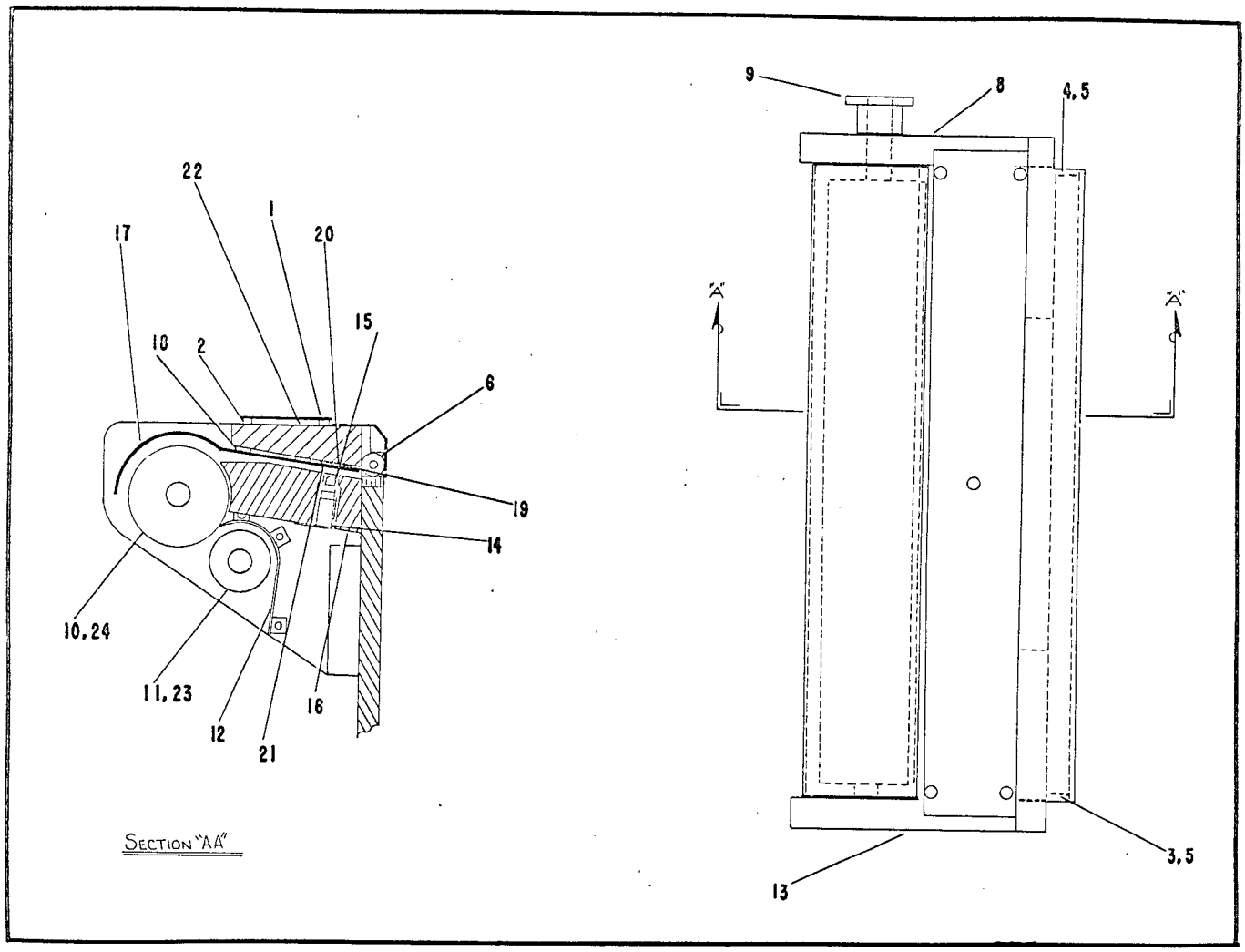

Figure 8-19. Sensor Mounting

FIG. & INDEX NO.	PART NUMBER	DESCRIPTION 1 2 3 4 5 6 7	UNITS PER ASSY	USABLE ON CODE
8-19	F6366	SENSOR MOUNTING, Frame separation detector (See Index 8, Figure 8-16 for NHA)	1	
-1	F6366-12	. COVER-WIRING	1	
-2	F6366-13	. SPACER-COVER	5	
-3	F6366-9	. BLOCK-MOUNTING, Guide roll	1	
-4	F6366-19	. BLOCK-MOUNTING, Guide roll	1	
-5	418C	. BEARING (Min. Precision Bearing)	2	
-6	F6366-15	. WASHER-NYLATRON	2	
-7	F6366-10	. ROLL-GUIDE	1	
-8	F6366-4	. BRACKET-REAR, Index Assembly	1	
-9	F6366-17	. SPROCKET	1	
-10	F6366-8	. ROLL-DRIVE, Metering Assembly	1	
-11	F6366-7	. ROLL-WRAP	1	
-12	F6366-16	. THREADING GUIDE	1	
-13	F6366-5	. BRACKET-FRONT, Index Assembly	1	
-14	25-12	. SOCKET-LAMP (Lee Craft Lamp)	9	
-15	253X	. LAMP (General Electric Co.)	9	
-16	F6366-2	. BAR-MOUNTING, Lamp	1	
-17	F6366-11	. APERATURE PLATE, Photocell	1	

Approved For Release 2005/02/17 : CIA-RDP78B04770A001600030001-2

Approved For Release 2005/02/17 : CIA-RDP78B04770A001600030001-2

FIG. & INDEX NO.	PART NUMBER	DESCRIPTION 1 2 3 4 5 6 7	UNITS PER ASSY	USABLE ON CODE
8-19 -18	F6366-14	. SPACER-APERATURE PLATE	6	
-19	COMM	. MYLAR TAPE, 1/2 wide	A/R	
-20	M-SIV-7100	. PHOTOCELL (Texas Instrument Corp.)	9	
-21	COMM	. MYLAR TAPE, 1/2 wide	A/R	
-22	F6366-3	. PLATE-MOUNTING, Photocell	1	
-23	F6366-21	. BEARING	2	
-24	MMS5K	. BALL BEARING	2	

Approved For Release 2005/02/17 : CIA-RDP78B04770A001600030001-2

Approved For Release 2005/02/17 : CIA-RDP78B04770A001600030001-2

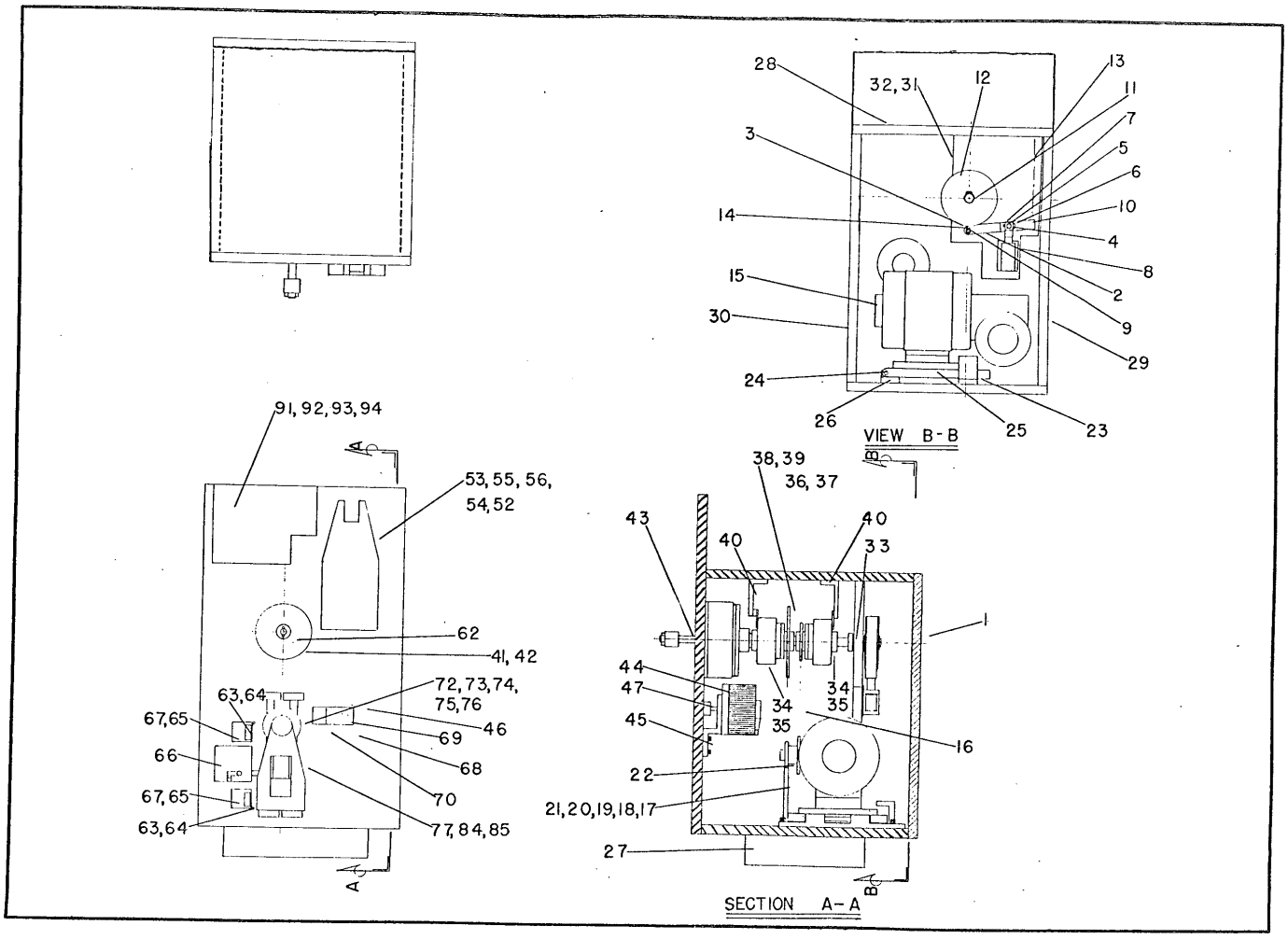

8-20. Drive Module, Left Hand

Approved For Release 2005/02/17 : CIA-RDP78B04770A001600030001-2

Approved For Release 2005/02/17 : CIA-RDP78B04770A001600030001-2

FIG. & INDEX NO.	PART NUMBER	DESCRIPTION 1 2 3 4 5 6 7	UNITS PER ASSY	USABLE ON CODE
8-20	F5704	DRIVE MODULE, Left hand (See Index 15, Figure 8-16 for NHA)	1	
-1	D5720	. PLATE-REAR	1	
-2	A6327	. CLAMP-BELT	1	
-3	L6	. BELT, 5/8 Width (Globe Belting)	A/R	
-4	5144-18	. RETAINING RING (Waldes Kohinoor)	1	
-5	A6319	. PIN	1	
-6	A6318	. PIN-TIE	1	
-7	A6328	. BAR-TIE	1	
-8	16-CONT-115VAC	. SOLENOID (Guardian)	1	
-9	5144-25	. RETAINING RING (Waldes Kohinoor)	1	
-10	B6312	. ARM-STATIC BRAKE	1	
-11	5100-50-W	. RETAINING RING (Waldes Kohinoor)	2	
-12	B6321	. BRAKE WHEEL	1	
-13	F5704-11	. SPRING	1	
-14	A6317	. PIN-PIVOT	1	
-15	NSH-34RH	. MOTOR-GEARED, 20:1 Reduction, 1/25 H. P., 86 RPM; for use with Minarik Speed Control, Model SH-32	1	
-16	No. 25	. ROLLER CHAIN	A/R	
-17	F5704-18	. PIN-SPROCKET MOUNTING, Take-Up	1	
-18	F5704-19	. SPROCKET, Take-Up	1	
-19	S3K	. BEARING-SPROCKET, Take-Up	2	
-20	F5702-20	. SPACER, Take-Up	1	
-21	F5702-21	. PLATE-MOUNTING, Take-Up sprocket	1	
-22	F5704-10	. SPROCKET-DOUBLE, Motor	1	
-23	F5704-9	. TAKE-UP BRACKET, Drive	1	
-24	F5704-12	. PIN-MOUNTING PLATE, Motor	1	
-25	F5704-13	. PLATE-MOUNTING, Motor	1	
-26	F5704-14	. BRACKET-PIVOT, Mounting plate, Motor	1	
-27	F5704-8	. MOTOR CONTROL ASSEMBLY	1	
-28	F5704-2	. PLATE-TOP	1	
-29	D5598	. PLATE-SIDE	1	
-30	D5599	. PLATE-SIDE, Mounting	1	
-31	F5704-16	. PLATE-MOUNTING, Static brake	1	
-32	S5K	. BEARING, (The Fafnir Bearing Co.)	1	
-33	F5704-17	. COLLAR-BEARING	1	
-34	303S	. CLUTCH COUPLING, Bearing mounted, 1/2 bore - (Eaton Manufacturing Co.)	2	
-35	F5704-22	. SPACER-CLUTCH	2	
-36	F5704-23	. SPROCKET-CLUTCH, Fast speed	1	
-37	S5KPP	. BALL BEARING (The Fafnir Bearing Co.)	2	
-38	F5704-24	. SPROCKET-CLUTCH, Slow speed	1	
-39	S5KPP	. BALL BEARING	2	
-40	F5704-25	. ANGLE-TIE, Clutch	2	
-41	B5628	. BEARING CARTRIDGE-FRONT	1	
-42	203NPP	. BALL BEARING (The Fafnir Bearing Co.)	1	
-43	F5704-27	. SHAFT-DRIVE	1	
-44	100BU	. VARIABLE TRANSFORMER (Standard Electrical Products)	1	
-45	F5704-28	. ANGLE-MOUNTING, Variac	1	
-46	F5704-29	. GEAR-VARIAC SHAFT	1	
-47	F5704-30	. SHAFT-EXTENSION, Variac	1	
-48	F5704-31	. ANGLE-SUPPORT, Clutch	1	
-49	S3K5	. BALL BEARING (The Fafnir Bearing Co.)	1	
-50	F5704-32	. PULLEY-INDEX	1	
-51	F5704-33	. SHAFT-PULLEY	1	
-52	F5704-34	. CLUTCH, Index assembly	1	
-53	F5704-35	. SPROCKET-LOWER, Negative index assembly	1	
-54	F5704-36	. SHAFT-CLUTCH, Negative index assembly	1	

Approved For Release 2005/02/17 : CIA-RDP78B04770A001600030001-2

Approved For Release 2005/02/17 : CIA-RDP78B04770A001600030001-2

FIG. & INDEX NO.	PART NUMBER	DESCRIPTION 1 2 3 4 5 6 7	UNITS PER ASSY	USABLE ON CODE
8-20-55	F5704-59	. COVER-SPROCKET, Negative index assembly	1	
-56	No. 25	. ROLLER CHAIN	A/R	
-57	F5704-37	. PLATE-MOUNTING, Clutch	1	
-58	S3K	. BALL BEARING, Clutch	1	
-59	F5704-38	. STANDOFF-ROD, Negative index assembly weight	2	
-60	F5704-39	. WEIGHT	1	
-61	F5704-40	. SHAFT, Negative index assembly weight	1	
-62	F5704-41	. COLLAR-DRIVE	1	
-63	A5-10	. ACTIVATOR (Electro-Snap Co.)	2	
-64	1SM1-T	. MICRO-SWITCH (Micro Switch Co.)	2	
-65	F5704-42	. PLATE-MOUNTING, Switch	2	
-66	F5704-43	. LATCH, Rider roll	1	
-67	F5704-44	. SPACER, Switch	2	
-68	F5704-45	. GEAR-IDLER	1	
-69	F5704-46	. SHAFT-IDLER	1	
-70	F5704-47	. BRACKET-IDLER GEAR	1	
-71	S1K7	. BALL BEARING (The Fafnir Bearing Co.)	2	
	B5657	. GUIDE WHEEL ASSEMBLY	1	
-72	B5654	. WHEEL-ARM GUIDE	1	
-73	A5652	. PIN-BEARING	1	
-74	MMS1K7	. BALL BEARING (The Fafnir Bearing Co.)	2	
-75	A5653	. SPACER-BEARING	1	
-76	A5651	. CARTRIDGE-BEARING	1	
-77	F5704-48	. FRAME-GUIDE WHEEL	1	
-78	5100-25	. RETAINING RING (Waldes Kohinoor)	1	
-79	F5704-49	. GEAR-RACK DRIVEN (The Boston Gear Works)	1	
-80	S5K	. BALL BEARING	2	
-81	F5704-50	. SHAFT-GEAR	1	
-82	F5704-51	. BLOCK-MOUNTING, Linear bearing shaft	4	
-83	F5704-52	. SHAFT-LINEAR BEARING	2	
-84	F5704-55	. BLOCK-LINEAR BEARING	1	
-85	XA-61014	. LINEAR BEARING	4	
-86	F5704-53	. PIVOT PIN, Link	2	
-87	F5704-54	. LINK-DRIVE, Rack	1	
-88	F5704-56	. PIN-SUPPORT, Rack	2	
-89	F5704-57	. BEARING-RACK	2	
-90	F5704-58	. RACK	1	
-91	5151	. KNOB (Ohmite Manufacturing Co.)	2	
-92	5116	. KNOB (Ohmite Manufacturing Co.)	2	
-93		. KNOB	1	
-94	F5704-60	. PLATE-IDENTIFICATION, Frame separation detector	1	

Approved For Release 2005/02/17 : CIA-RDP78B04770A001600030001-2

Approved For Release 2005/02/17 : CIA-RDP78B04770A001600030001-2

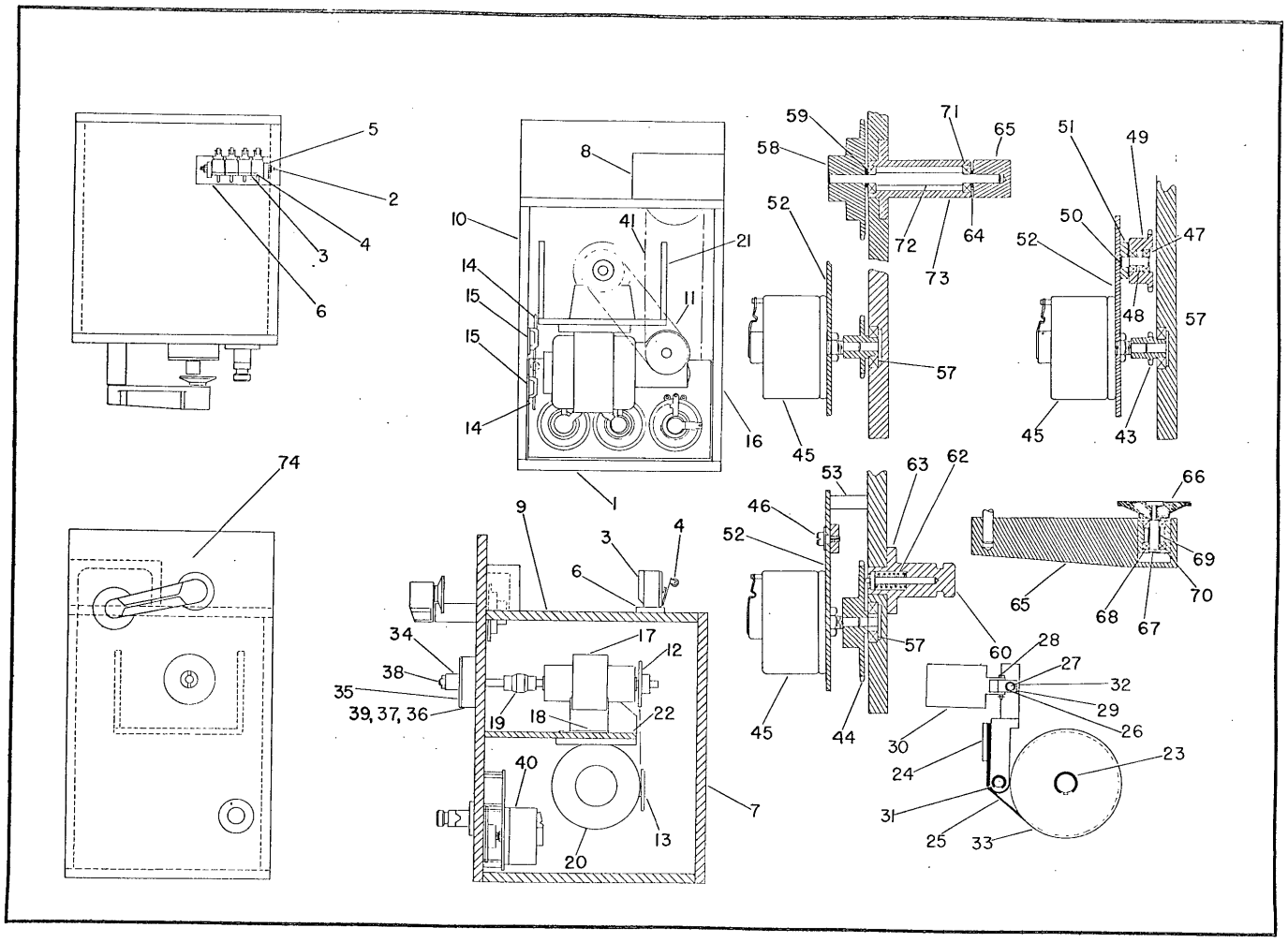

Figure 8-21. Drive Module-Lower Right Hand

Approved For Release 2005/02/17 : CIA-RDP78B04770A001600030001-2

Approved For Release 2005/02/17 : CIA-RDP78B04770A001600030001-2

FIG. & INDEX NO.	PART NUMBER	DESCRIPTION 1 2 3 4 5 6 7	UNITS PER ASSY	USABLE ON CODE
8-21	F5705	DRIVE MODULE-LOWER RIGHT HAND (See Index 51, Figure 8-16 for NHA)	1	
-1	D5719	. PLATE-BOTTOM	1	
	B6100	. SWITCH ASSEMBLY	1	
-2	A6099	. . STUD-CONNECTOR	1	
-3	A6170	. . INSERT-FISHPAPER	5	
-4	DT-2RV22-A7	. . SWITCH (Micro Switch Co.)	4	
-5	A6082	. . STANDOFF	2	
-6	B6083-1	. . BAR-MOUNTING, Switch	1	
-7	D5720	. PLATE-REAR	1	
-8	F5705-16	. BLOCK-COVER, Sprocket	1	
-9	D5715	. PLATE-TOP	1	
-10	D5598	. PLATE-SIDE	1	
-11	25	. CHAIN-ROLLER	A/R	
-12	B6306	. SPROCKET-CLUTCH	1	
-13	B6305	. SPROCKET-MOTOR	1	
-14	15-141	. TERMINAL STRIP (Cinch Jones)	2	
-15	MS-15-141	. MARKER-TERMINAL (Cinch Jones)	2	
-16	D5718	. PLATE-SIDE, Mounting	1	
-17	1NC90B	. MAGNE-CLUTCH (Vickers, Inc.)	1	
-18	B6307	. SPACER-CLUTCH	1	
-19	J-1211-2	. FLEXIBLE COUPLING	1	
-20	NSI-33R	. MOTOR-WORM GEAR TYPE (Drive shaft position opposite # 1 with rotor shaft seal, 173 RPM output; 115 VAC, 11.9 in-lbs torque, 1/20 H. P.) (Bodine Electric Co.)	1	
-21	D6249	. GUSSET-TABLE, Drive	2	
-22	D6255	. PLATE-TABLE, Drive	1	
-23	5100-50-W	. RETAINING RING (Waldes Kohinoor)	2	
-24	A6327	. CLAMP-BELT	1	
-25	L6	. BELT, 5/8 Width (Globe Belting)	A/R	
-26	5144-18	. RETAINING RING (Waldes Kohinoor)	1	
-27	A6319	. PIN	1	
-28	A6318	. PIN-TIE	1	
-29	A6328	. BAR-TIE	1	
-30	16-CONT-115VAC	. SOLENOID (Guardian)	1	
-31	5144-25	. RETAINING RING (Waldes Kohinoor)	1	
-32	B6312	. ARM-STATIC BRAKE	1	
-33	B6321	. BRAKE WHEEL	1	
-34	B5626	. COLLAR-DRIVE, Spool	1	
-35	A6286	. CAP-FRONT, Bearing block	1	
-36	S3KDD	. BALL BEARING (The Fafnir Bearing Co.)	2	
-37	A6287	. CAP-REAR, Bearing block	1	
-38	A6279	. SHAFT, Film spool support	1	
-39	B6285	. BEARING BLOCK, Shaft	1	
-40	F5669	. CONTROL ASSEMBLY, MODULE	1	
-41	25	. . ROLLER CHAIN	A/R	
-42	B5634	. . SPROCKET	1	
-43	B5633	. . SPROCKET	1	
-44	B5635-2	. . SPROCKET	1	
-45	100BU	. . VARIABLE TRANSFORMER (Standard Electrical Products)	3	
-46	4327	. . SCREW-SHOULDER (PIC)	1	
	B5658	. . TENSION ARM ASSEMBLY	1	
-47	MMS1K7	. . . BEARING (The Fafnir Bearing Co.)	2	
-48	A5648	. . . SPACER-BEARING	1	
-49	B5637	. . . SPROCKET	1	
-50	A5649	. . . SHAFT-ARM	1	
-51	B5650	. . . ARM-TENSION	1	
-52	B5646	. . PLATE-MOUNTING, Transformer	1	

Approved For Release 2005/02/17 : CIA-RDP78B04770A001600030001-2

Approved For Release 2005/02/17 : CIA-RDP78B04770A001600030001-2

FIG. & INDEX NO.	PART NUMBER	DESCRIPTION 1 2 3 4 5 6 7	UNITS PER ASSY	USABLE ON CODE
8-21-53	A5644	. . STANDOFF-PLATE	11	
-54	A5976	. . PIN-RETAINING, Spring	1	
-55	A5663	. . PIN-RETAINING, Spring	1	
-56	A5632	. . SPRING-TENSION	1	
-57	MMS5K	. . BEARING (The Fafnir Bearing Co.)	3	
-58	B5636	. . SPROCKET	1	
-59	A5662	. . SPACER WASHER	2	
	B5656	. . LATCHING ASSEMBLY	1	
-60	A5642	. . . KNOB	1	
-61	A5643	. . . POST-SPRING	1	
-62	A5631	. . . SPRING	1	
-63	A5641	. . . POST	1	
	B5665	. . GUIDE ARM ASSEMBLY	1	
-64	A5662	. . . WASHER-SPACER	1	
-65	B5655	. . . ARM-GUIDE	1	
	B5657	. . . GUIDE WHEEL ASSEMBLY	1	
-66	B5654	. . . . WHEEL-ARM	1	
-67	A5652	. . . . PIN-BEARING	1	
-68	MMS1K7	. . . . BEARING (The Fafnir Bearing Co.)	2	
-69	A5653	. . . . SPACER-BEARING	1	
-70	A5651	. . . . CARTRIDGE-BEARING	1	
-71	MMS1K7	. . . . BEARING (The Fafnir Bearing Co.)	2	
-72	A5640	. . . SHAFT-ARM, Guide	1	
-73	B5645	. . . POST-ARM, Guide	1	
-74	F5667	. . PLATE-FRONT, Module	1	

Approved For Release 2005/02/17 : CIA-RDP78B04770A001600030001-2

Approved For Release 2005/02/17 : CIA-RDP78B04770A001600030001-2

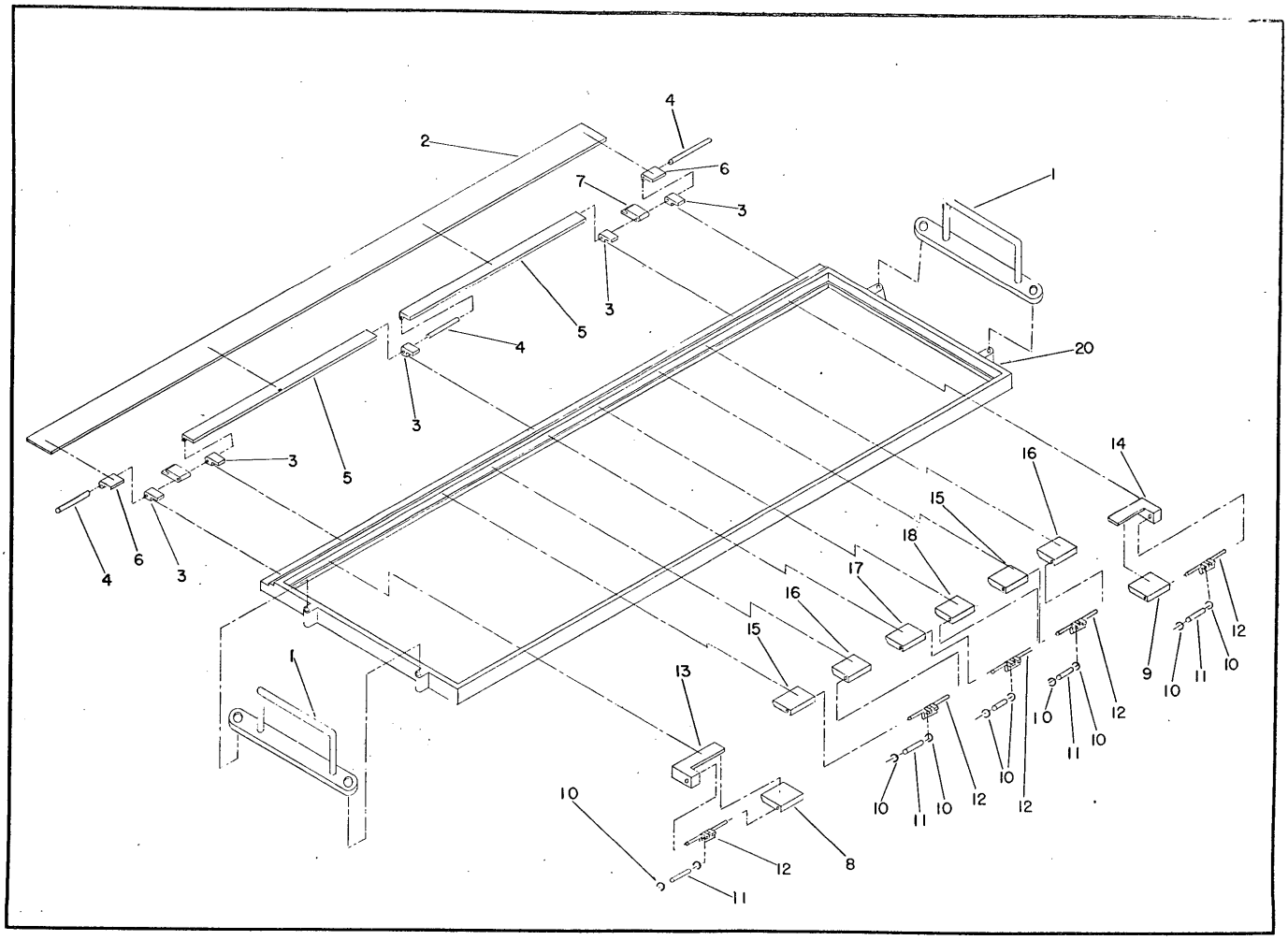

Figure 8-22. Assembly, Reseau Pin and Negative Clamp

Approved For Release 2005/02/17 : CIA-RDP78B04770A001600030001-2

Approved For Release 2005/02/17 : CIA-RDP78B04770A001600030001-2

FIG. & INDEX NO.	PART NUMBER	DESCRIPTION 1 2 3 4 5 6 7	UNITS PER ASSY	USABLE ON CODE
8-22	F6062	ASSEMBLY-RESEAU PIN AND NEGATIVE CLAMP (See Index 27, Figure 8-16 for NHA)	1	
-1	B5756	. HANDLE-PLATEN FRAME	2	
-2	B6066	. PLATE-CLAMP, Negative	1	
-3	A6064	. BLOCK-BEARING, Negative clamp	5	
-4	A6073	. SHAFT-NEGATIVE CLAMP	3	
-5	B6065	. BLOCK-ROTATING, Middle	2	
-6	A6063	. BLOCK-ROTATING, Negative clamp	2	
-7	A6080	. ARM-ACTIVATION, Negative clamp	2	
-8	A6072-1	. BLOCK-BEARING, Reseau pin	1	
-9	A6072-2	. BLOCK-BEARING, Reseau pin	1	
-10	X5133-6	. RETAINING RING (Waldes Kohinoor, Inc.)	10	
-11	A6150	. PIN-CONNECTING, Reseau pin	5	
-12	B5905	. LEVER-FILM LOCATING PIN	2	
-13	B6071-1	. BLOCK-BEARING, Reseau pin	1	
-14	B6071-2	. BLOCK-BEARING, Reseau pin	1	
-15	B6069-1	. BLOCK-BEARING, End	2	
-16	B6069-2	. BLOCK-BEARING, End	2	
-17	B6069-3	. BLOCK-BEARING, End	1	
-18	B6069-4	. BLOCK-BEARING, End	1	
-19	B5905	. LEVER-FILM LOCATING PIN	2	
-20	1P1807	. FRAME, Reseau platen (Xerox Corp.)	1	

Approved For Release 2005/02/17 : CIA-RDP78B04770A001600030001-2

Approved For Release 2005/02/17 : CIA-RDP78B04770A001600030001-2

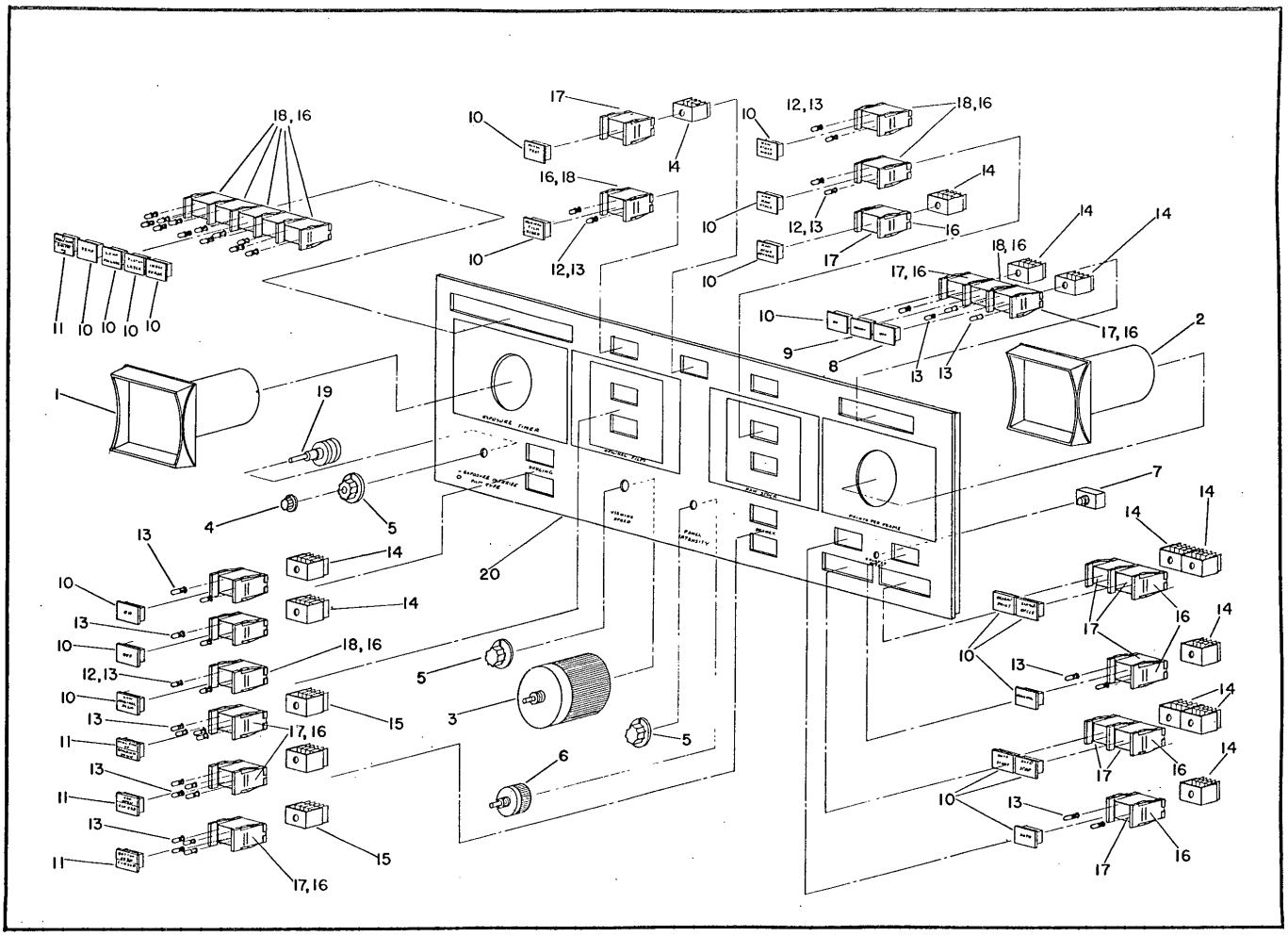

Figure 8-23. Control Panel Assembly

Approved For Release 2005/02/17 : CIA-RDP78B04770A001600030001-2

Approved For Release 2005/02/17 : CIA-RDP78B04770A001600030001-2

FIG. & INDEX NO.	PART NUMBER	DESCRIPTION 1 2 3 4 5 6 7	UNITS PER ASSY	USABLE ON CODE
8-23	F5798	CONTROL PANEL ASSEMBLY (See Index 24, Figure 8-1 .... for NHA)	1	
-1	HP50A6	. TIMER (Eagle Signal Co.)	1	
-2	HZ150A601	. COUNTER (Eagle Signal Co.)	1	
-3	250BU	. VARIAC (Standard Electrical Products)	1	
-4	F5798-23	. KNOB	1	
-5	F5798-22	. KNOB	3	
-6	H-50-F1-346	. RHEOSTAT	1	
-7	8411K3	. SWITCH (Cutler-Hammer)	1	
-8	2A81	. DISPLAY SCREEN, Red (Micro Switch Co.)	1	
-9	2A82	. DISPLAY SCREEN, Yellow (Micro Switch Co.)	1	
-10	2A70	. DISPLAY SCREEN (Micro Switch Co.)	19	
-11	2A65	. DISPLAY SCREEN, Split (Micro Switch Co.)	4	
-12	2G5	. FILTER, Red (Micro Switch Co.)	20	
-13	327	. LAMP (General Electric or equal)	44	
-14	2D8	. MOMENTARY SWITCH (Micro Switch Co.)	12	
-15	2D25	. ALTERNATE ACTION SWITCH (Micro Switch Co.)	3	
-16	2B3	. SHORT BARRIER (Micro Switch Co.)	42	
-17	2C3	. INDICATOR-OPERATOR (Micro Switch Co.)	15	
-18	2F3	. INDICATOR UNIT	10	
-19	D5712	. TAP-SWITCH ASSEMBLY	1	
-20	F5875	. PANEL-CONTROL	1	

Approved For Release 2005/02/17 : CIA-RDP78B04770A001600030001-2

Approved For Release 2005/02/17 : CIA-RDP78B04770A001600030001-2

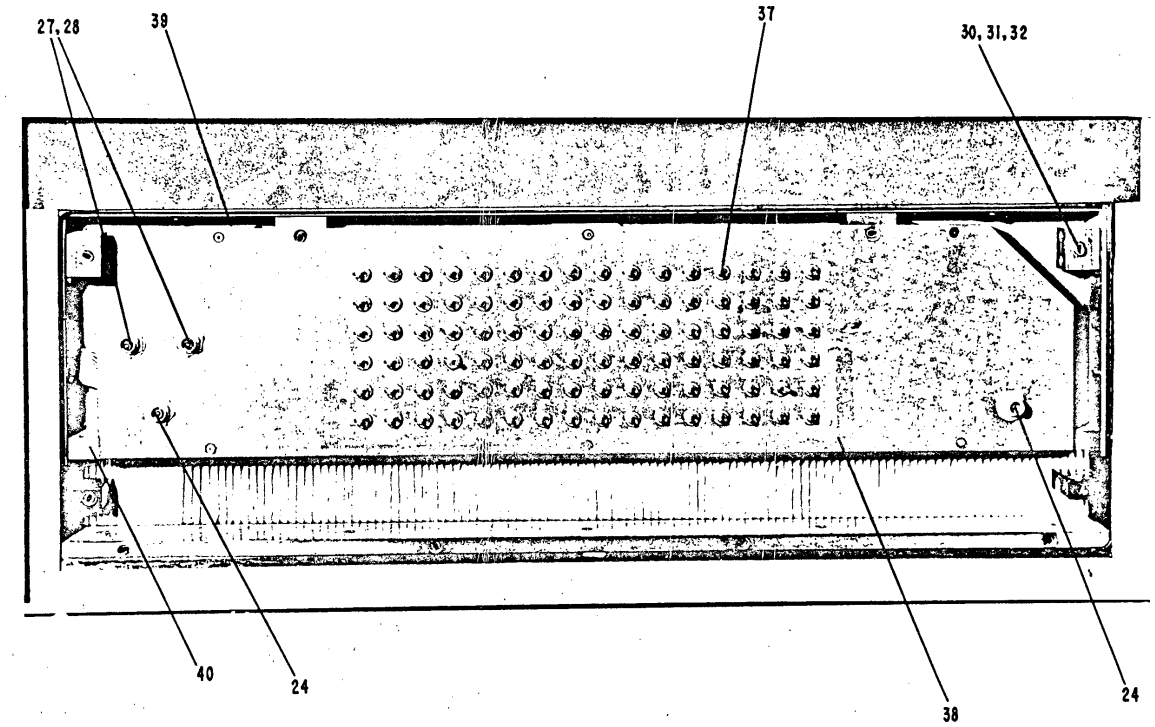

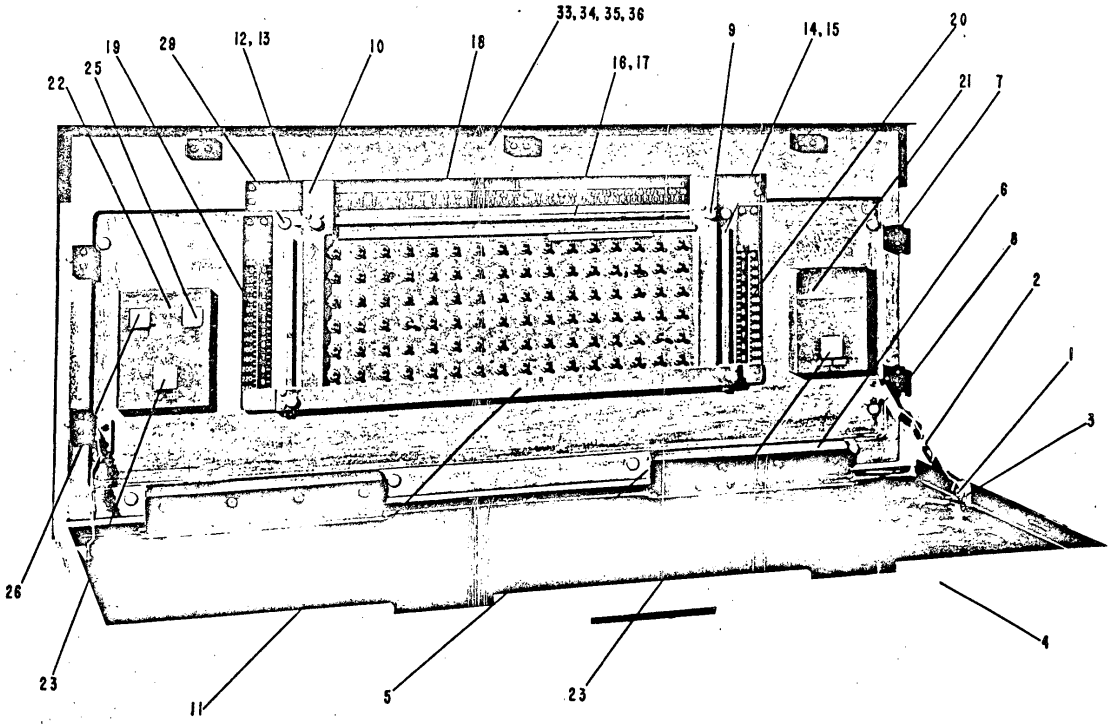

Figure 8-24. Switch Assembly, Lamp Programming

Approved For Release 2005/02/17 : CIA-RDP78B04770A001600030001-2

Approved For Release 2005/02/17 : CIA-RDP78B04770A001600030001-2

FIG. & INDEX NO.	PART NUMBER	DESCRIPTION 1 2 3 4 5 6 7	UNITS PER ASSY	USABLE ON CODE
8-24	F6003	SWITCH ASSEMBLY, Lamp programming (See Index 26, Figure 8-1 for NHA)	1	
-1	A6120	. RIVET	2	
-2	1037	. LID SUPPORT HINGE	2	
-3	A6035	. BAR-RISER, Lever	2	
-4	D6023	. COVER-SWITCH, Lamp toggle	1	
-5	B6149	. T-SLIDE	2	
-6	B6011	. BAR-ATTACHMENT	2	
-7	BL 54N	. BALL PLUNGER (Vlier)	7	
-8	B6031	. ANGLE-MOUNTING, Ball detent	7	
-9	COMM	. KNURLED SCREW, No. 6-32 by 3/8 lg., brass	4	
-10	B6013	. BAR-GUIDE, Mask	2	
-11	B6012	. GUIDE-MASK	1	
-12	A6009	. BAR-MOUNTING, Mask	4	
-13	A6010	. PLATE-RETAINER, Mask guide	4	
-14	B6015	. BAR-MASK RAILING	2	
-15	F6003-51	. STAND-OFF	4	
-16	B6018	. BAR-MASK RAILING	1	
-17	F6003-52	. STAND-OFF	2	
-18	D6024	. SCALE-HORIZONTAL	1	
-19	D6028-1	. SCALE-VERTICAL	1	
-20	D6028-2	. SCALE-VERTICAL	1	
-21	B6019	. COVER-SWITCH, Right hand	1	
-22	B6017	. COVER-SWITCH, Left hand	1	
-23	01-921411	. LENS CAP (I. T. W. Licon Co.)	2	
-24	01-365520	. SWITCH (I. T. W. Licon Co.)	2	
-25	01-921323	. LENS CAP (I. T. W. Licon Co.)	1	
-26	01-921322	. LENS CAP (I. T. W. Licon Co.)	1	
-27	327	. LAMP, Flange base (General Electric Co. or equal)	2	
-28	01	. INDICATOR UNIT, 5/8-24 Bushing (I. T. W. Licon Co.)	2	
-29	82-32-101-17	. RETAINER (South Chester Corp.)	10	
-30	2-0-260	. STUD-LION (South Chester Corp.)	10	
-31	43-13-1-23	. SPRING (South Chester Corp.)	10	
-32	82-46-101-40	. WASHER-WEAR (South Chester Corp.)	10	
-33	D5902	. PLATE-MASK MOUNTING	1	
-34	565	. FOAM TAPE, 1/8 thk. by 1/2 wide, black	A/R	
-35	565	. FOAM TAPE, 1/8 thk. by 1-1/4" wide, black	A/R	
-36	565	. FOAM TAPE, 1/8 thk. by 1-1/2" wide, black	A/R	
-37	MST205S	. TOGGLE SWITCH, (Alco Switch)	96	
-38	F6016	. PLATE-MOUNTING, Toggle switch	1	
-39	A6004	. BAR-TOGGLE SWITCH MOUNTING PLATE	3	
-40	D6014	. BAR-PLATE, Bottom	1	

Approved For Release 2005/02/17 : CIA-RDP78B04770A001600030001-2

Approved For Release 2005/02/17 : CIA-RDP78B04770A001600030001-2

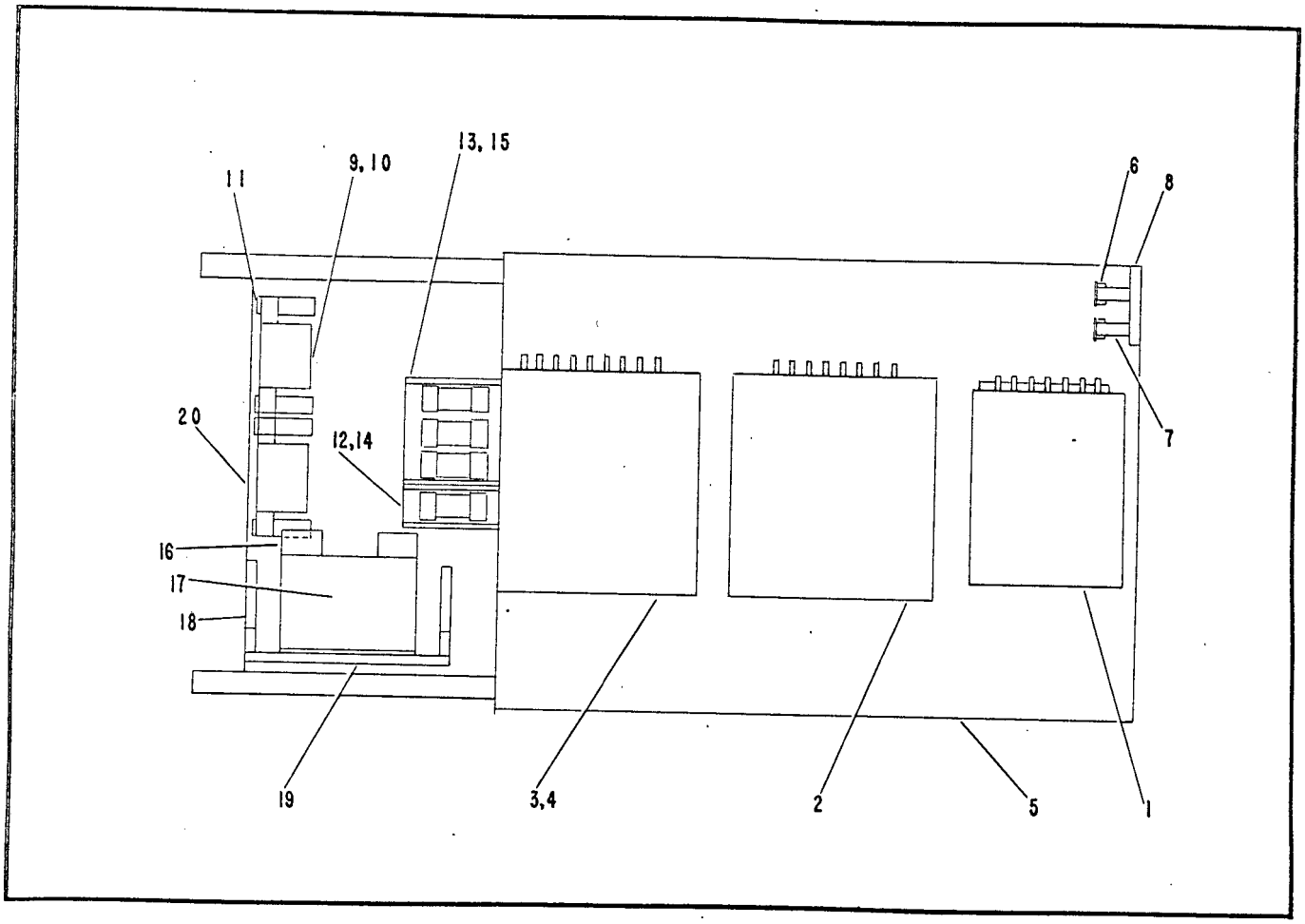

Figure 8-25. Lower Right Hand Drawer

FIG. & INDEX NO.	PART NUMBER	DESCRIPTION 1 2 3 4 5 6 7	UNITS PER ASSY	USABLE ON CODE
8-25	F5739	LOWER RIGHT HAND DRAWER (See Index 4, Figure 8-4.... for NHA)	1	
-1	HT-20-2.8A	. POWER SUPPLY (Consolidated Avionics)	1	
-2	HT-39-3.5A	. POWER SUPPLY (Consolidated Avionics)	1	
-3	HT-28-4.4A	. POWER SUPPLY (Consolidated Avionics)	1	
-4	8101	. SILICONE GREASE (General Cement Co.) Use between ... power supplies and base plate.	A/R	
-5	F6314	. PLATE-BASE	1	
-6	26-182	. PLUG (Amphenol Connector Div.)	2	
-7	B6155	. STANDOFF-PLUG	4	
-8	B6153	. STANDOFF-FRONT PLUG	1	
	D5839	. INSTALLATION, FUSE AND CONTACTOR	1	
-9	1415	. . OVERLOAD RELAY (Allen Bradley Co.)	2	
-10	PRN-14	. . OVERLOAD RELAY HEATER (Allen Bradley Co.)	2	
-11	A6151	. . BLOCK-MOUNTING	4	
-12	COMM	. . FUSE, 30 Amp (Fusetron)	1	
-13	COMM	. . FUSE, 10 Amp (Fusetron)	3	
-14		. . FUSE BLOCK, One pole	1	
-15		. . FUSE BLOCK, Three pole	1	
-16	1495F1	. . AUXILARY CONTACT, Size 0-5, Series "K"	2	
-17	702-BOD-93	. . CONTACTOR, Size No. 1, Four (4) pole ..... (Allen Bradley Co.)	1	

Approved For Release 2005/02/17 : CIA-RDP78B04770A001600030001-2

Approved For Release 2005/02/17 : CIA-RDP78B04770A001600030001-2

FIG. & INDEX NO.	PART NUMBER	DESCRIPTION 1 2 3 4 5 6 7	UNITS PER ASSY	USABLE ON CODE
8-25 -18	D6126	. . GUSSET-MOUNTING PLATE	2	
-19	D6124	. . PLATE-MOUNTING, Contactor	1	
-20	D6125	. . PLATE-MOUNTING	1	

Approved For Release 2005/02/17 : CIA-RDP78B04770A001600030001-2

Approved For Release 2005/02/17 : CIA-RDP78B04770A001600030001-2

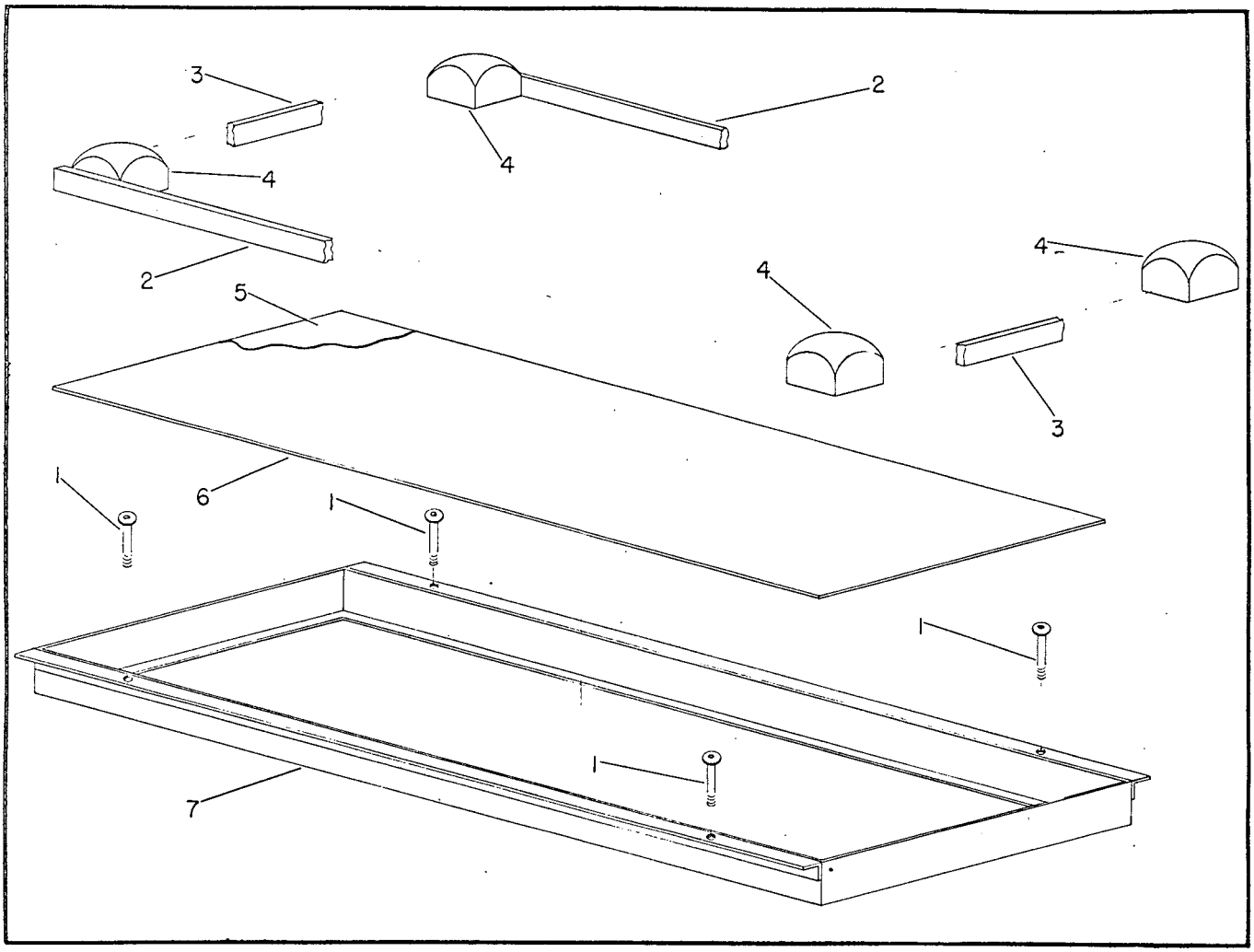

Figure 8-26. Lens Assembly

FIG. & INDEX NO.	PART NUMBER	DESCRIPTION 1 2 3 4 5 6 7	UNITS PER ASSY	USABLE ON CODE
8-26	No P/N	LENS ASSEMBLY (See Index 1, Figure 8-4)	1	
-1	A5605	. SCREW	4	
-2	B5841	. SPACER-LENS	2	
-3	B5843	. SPACER-LENS	2	
-4	B5842	. LENS	96	
-5	85C	. FILTER-WRATTEN, 12-1/2 x 32-1/2 (Eastman Kodak ... or equal)	1	
-6	F5600-101	. GLASS-DIFFUSION	1	
-7	D5844	. RETAINER-LENS	1	

Approved For Release 2005/02/17 : CIA-RDP78B04770A001600030001-2

Approved For Release 2005/02/17 : CIA-RDP78B04770A001600030001-2

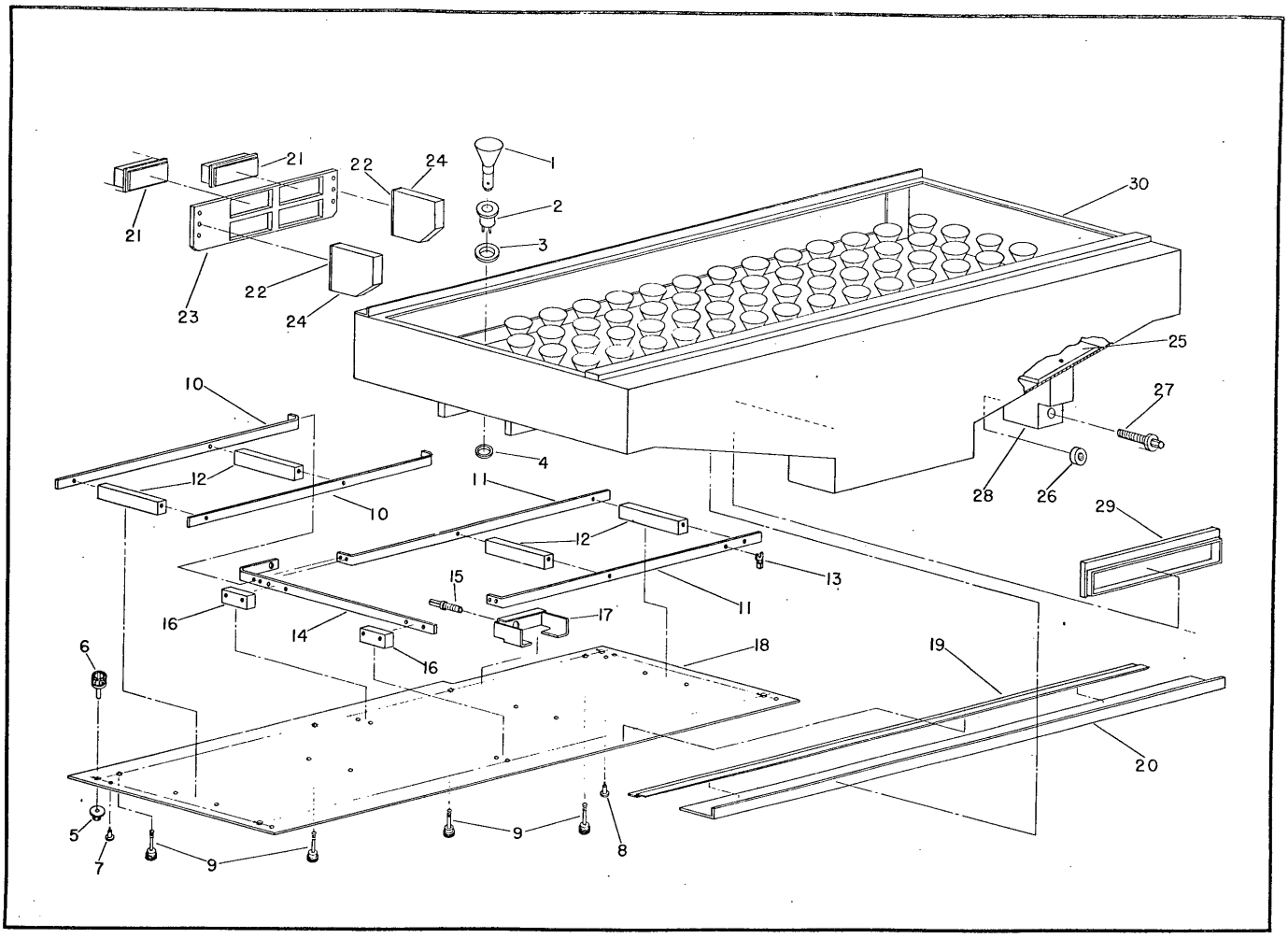

Figure 8-27. Lamp Housing Assembly

Approved For Release 2005/02/17 : CIA-RDP78B04770A001600030001-2

Approved For Release 2005/02/17 : CIA-RDP78B04770A001600030001-2

FIG. & INDEX NO.	PART NUMBER	DESCRIPTION 1 2 3 4 5 6 7	UNITS PER ASSY	USABLE ON CODE
8-27	F5983	LAMP HOUSING ASSEMBLY (See Index 3, Figure 8-4)	1	
-1	1385	. LAMP-EXPOSURE (General Electric Co.)	96	
-2	65-30	. LAMPHOLDER	96	
-3	A5984	. BUSHING, Lamp socket	96	
-4	A5856	. BUSHING, Lamp socket	96	
-5	5151	. KNOB (Ohmite Manufacturing Co.)	96	
-6	0106	. RHEOSTAT, Lamp balancing (Ohmite Manufacturing Co.)	96	
-7	SKT-8	. JACK-BLACK (Sealectro Corp.)	96	
-8	SKT-8	. JACK-RED (Sealectro Corp.)	1	
-9	A5973	. SCREW-CAPTIVATED	4	
-10	D5985	. FEEDER BUSS BAR-LEFT	2	
-11	D5986	. FEEDER BUSS BAR-RIGHT	2	
-12	B5987	. FEEDER BUSS BAR MOUNTING BLOCK	4	
-13	320882	. LUG-TERMINAL (American Pamcor, Inc.)	102	
-14	B5761	. BUSS BAR	1	
-15	B5821	. BUSS BAR PIN	1	
-16	B5970	. BUSS BAR MOUNTING BLOCK	2	
-17	B5811	. BUSS BAR PIN MOUNTING BRACKET	1	
-18	D5982	. MOUNTING PLATE, Lamp balancing unit	1	
-19	D5981	. HINGE	1	
-20	D5971	. ANGLE-HINGING	1	
-21	QRE-24P	. CONNECTOR (Winchester Electronics)	4	
-22	A5833	. SHIM-MOUNTING PLATE	2	
-23	B5972	. CONNECTOR MOUNTING PLATE	1	
-24	B5974	. BLCOK-MOUNTING	2	
-25	B6168	. PLATE-STIFFENER	1	
-26	B6169	. COLLAR, Jack screw	1	
-27	A5837	. SCREW-JACK	1	
-28	B5834	. BRACKET-JACK SCREW	1	
-29	D6157	. FRAME-LAMP HOUSING	1	
-30	F5858	. HOUSING-LAMP	1	

Approved For Release 2005/02/17 : CIA-RDP78B04770A001600030001-2

Approved For Release 2005/02/17 : CIA-RDP78B04770A001600030001-2

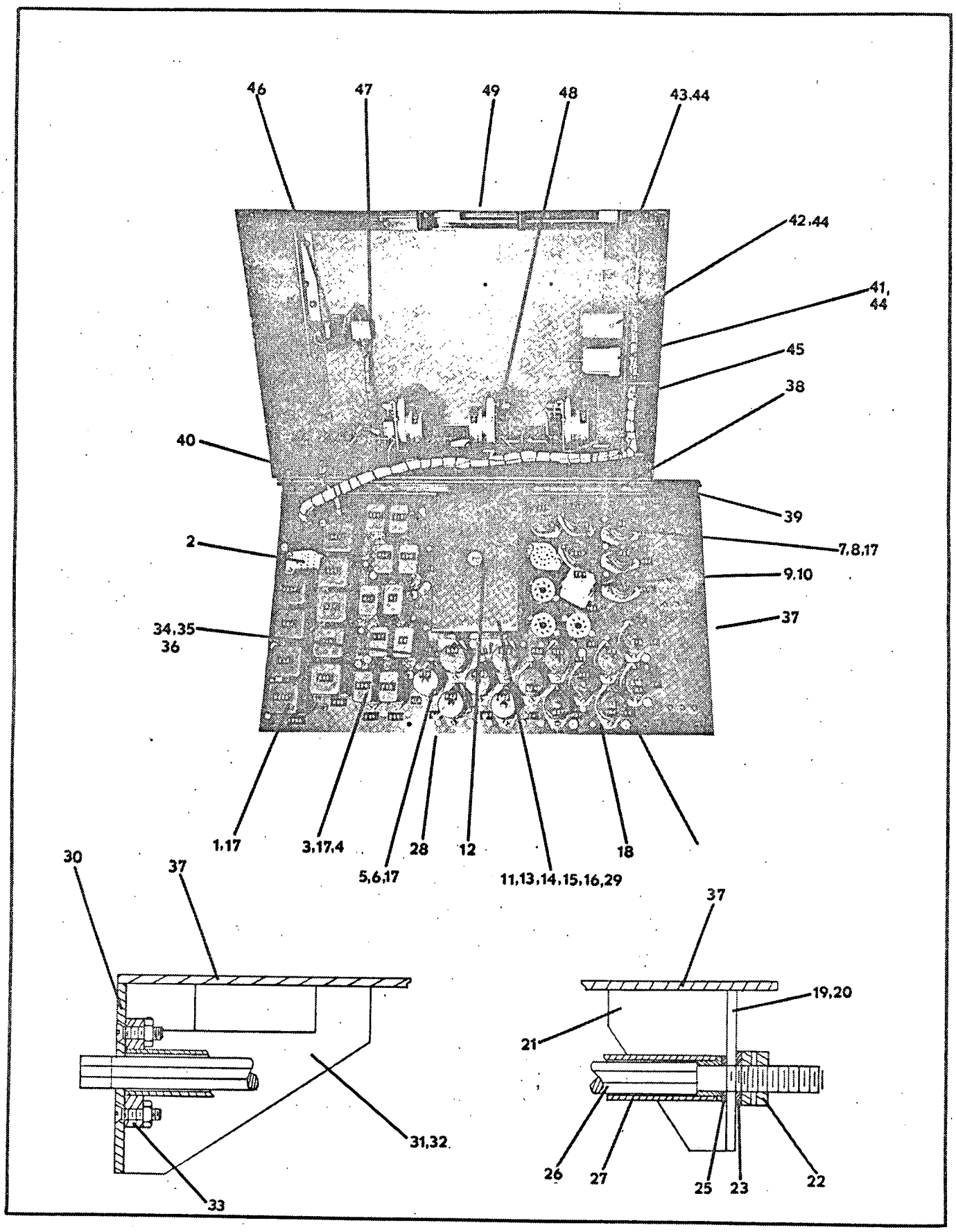

Figure 8-28. Lower Left Hand Module Assembly

Approved For Release 2005/02/17 : CIA-RDP78B04770A001600030001-2

Approved For Release 2005/02/17 : CIA-RDP78B04770A001600030001-2

FIG. & INDEX NO.	PART NUMBER	DESCRIPTION 1 2 3 4 5 6 7	UNITS PER ASSY	USABLE ON CODE
8-28	F6038	LOWER LEFT HAND MODULE ASSEMBLY (See Index 10, Figure 8-4 for NHA)	1	
-1	9226-4229	. RELAY (Leach Corp.)	9	
-2	SO1018-7119	. SOCKET (Leach Corp.)	10	
-3	9220-4402	. RELAY (Leach Corp.)	10	
-4	1010-7115	. SOCKET (Leach Corp.)	10	
-5	MHUO-18D	. RELAY (Allied Control)	17	
-6	16189-1	. SOCKET (Allied Control)	18	
-7	MHJUO-120	. RELAY (Allied Control)	3	
-8	16188-1	. SOCKET (Allied Control)	3	
-9	B5527	. TIME DELAY	1	
-10	88-ST	. SOCKET (Amphenol Connector Division)	4	
-11	B6029	. RELAY COVER	1	
-12	A5973	. CAPTIVE SCREW	1	
-13	A6006-1	. COVER POSITIONING BLOCK	1	
-14	A6006-2	. COVER POSITIONING BLOCK	1	
-15	KB 17D	. RELAY (Potter-Brumfield)	3	
-16	FT950-DTUR	. TERMINAL (Sealectro Corp.)	48	
-17	20-C	. DIODE (Sarkes-Tarzian)	43	
-18	RST-1-L2	. TERMINAL (Sealectro Corp.)	45	
-19	126-187	. PLUG	6	
-20	F6038-23	. CONNECTOR MOUNTING PLATE	1	
-21	F6038-22	. BUTTRESS	4	
-22	A6044	. COLLAR-JACKSCREW	1	
-23	F6038-56	. WASHER	1	
-24	F6038-50	. COLLAR-RETAINING	1	
-25	F6038-55	. WASHER	1	
-26	B6046	. JACKSCREW	1	
-27	B6045	. SHAFT SLEEVE	1	
-28	D6057	. ANGLE	1	
-29	B6002	. THREADED BUSHING	1	
-30	F6038-45	. PLATE-JACKSCREW, Front	1	
-31	A6048	. BUTTRESS, Front center	2	
-32	B6047	. BUTTRESS, Front side	2	
-33	A6042	. RETAINER, JACKSCREW	1	
-34	F6038-59	. NUT	13	
-35	2009	. TERMINAL (Herman H. Smith, Inc.)	30	
-36	F6038-60	. INSERT-GROUND	30	
-37	F6038-2	. BASE PLATE	1	
-38	D6058	. HINGE, Base plate	1	
-39	D6056	. "Z" SECTION	1	
-40	D6055	. HINGE-COVER	1	
-41	B5527	. TIME DELAY	1	
-42	KR 11AE at 115 VAC	. RELAY (Potter-Brumfield)	1	
-43	OB144B1	. RECTIFIER PACK (Syntron)	4	
-44	88-ST	. SOCKET (Amphenol Electronics Corp.)	6	
-45	F6038-30	. PLATE-MOUNTING	1	
-46	TCe7E	. COUNTER, 7 Digit (Landis & Gyr, Inc.)	1	
-47	B125Z140	. RECTIFIER (Landis & Gyr, Inc.)	1	
-48	90-15S	. TIME DELAY (Industrial Timer Corp.)	3	
-49	F6026	. COVER ASSEMBLY (See Figure 8-29)	1	

Approved For Release 2005/02/17 : CIA-RDP78B04770A001600030001-2

Approved For Release 2005/02/17 : CIA-RDP78B04770A001600030001-2

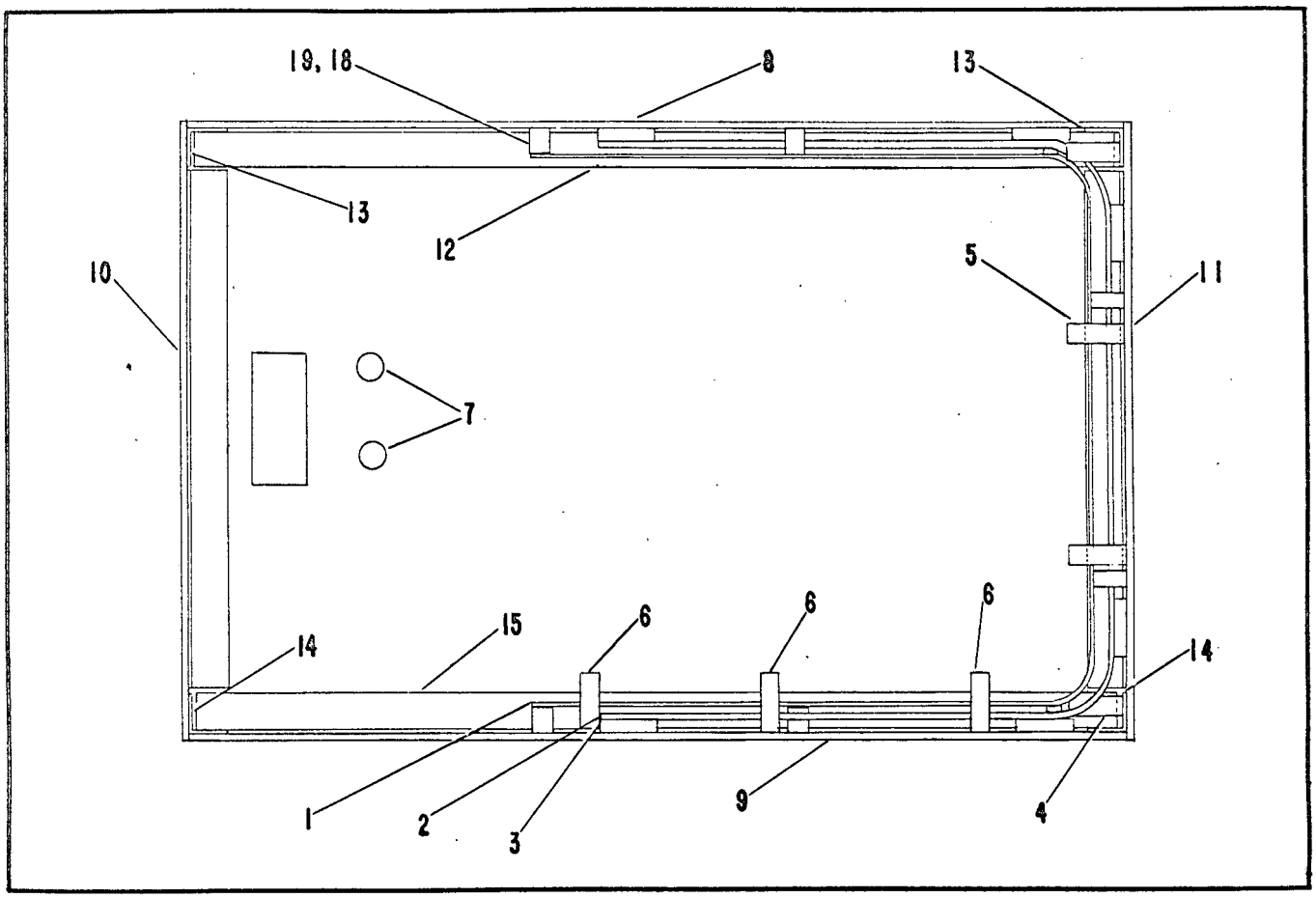

Figure 8-29. Cover Assembly

FIG. & INDEX NO.	PART NUMBER	DESCRIPTION 1 2 3 4 5 6 7	UNITS PER ASSY	USABLE ON CODE
8-29	F6026	COVER ASSEMBLY, Lower left hand module (See Index 49, Figure 8-28 for NHA)	1	
-1	D6051	. BUSS BAR SHIELD	1	
-2	D6030	. BUSS BAR	2	
-3	A6025	. INSULATING BLOCK	6	
-4	A6008-2	. THREADED STANDOFF	4	
-5	A6008-1	. THREADED STANDOFF	4	
-6	A6007-1	. THREADED STANDOFF	6	
-7	F6026-7	. STANDOFF, Nylon	2	
-8	F6026-4	. PLATE, Side, Right	1	
-9	F6026-5	. PLATE, Side, Left	1	
-10	F6026-6	. PLATE, Front	1	
-11	F6026-3	. PLATE, Rear	1	
-12	F6026-16	. ANGLE, Longitudinal, Top, Right	1	
-13	F6026-14	. ANGLE, Corner, Right	2	
-14	F6026-15	. ANGLE, Corner, Left	2	
-15	F6026-17	. ANGLE, Longitudinal, Top, Left	1	
-16	F6026-2	. PLATE, Top	1	
-17	F6026-18	. ANGLE, Transverse, Top	2	
-18	A6007-2	. THREADED STANDOFF	4	
-19	A6007-3	. THREADED STANDOFF	12	

Approved For Release 2005/02/17 : CIA-RDP78B04770A001600030001-2

Approved For Release 2005/02/17 : CIA-RDP78B04770A001600030001-2

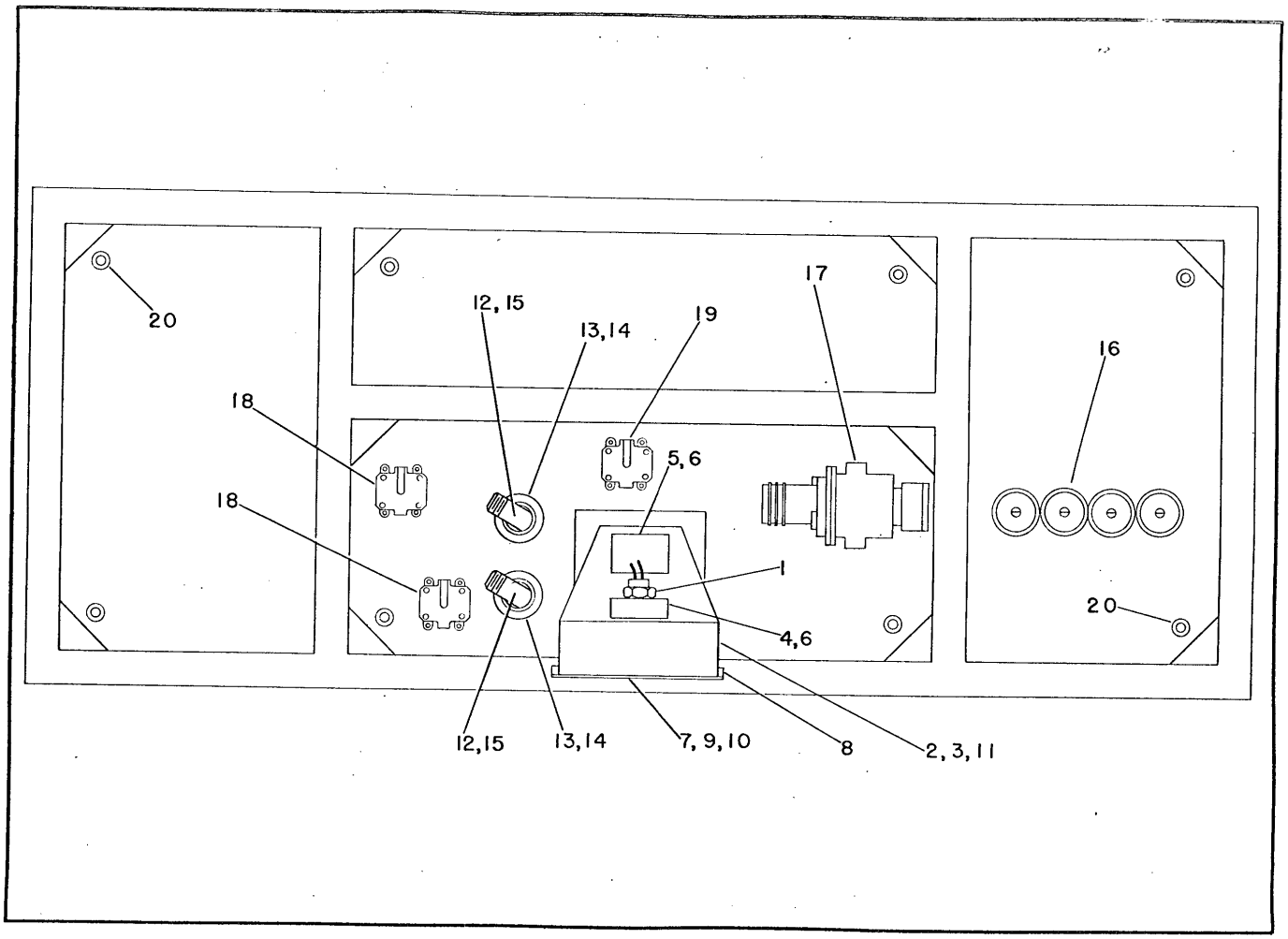

Figure 8-30. Base Assembly

Approved For Release 2005/02/17 : CIA-RDP78B04770A001600030001-2

Approved For Release 2005/02/17 : CIA-RDP78B04770A001600030001-2

FIG. & INDEX NO.	PART NUMBER	DESCRIPTION 1 2 3 4 5 6 7	UNITS PER ASSY	USABLE ON CODE
8-30	F5832	BASE ASSEMBLY (See Index 12, Figure 8-4 for NHA)	1	
-1	17121-0	. THERMO SWITCH (Fenwal Corp.)	1	
-2	B6109	. GASKET-EXHAUST	2	
-3	D6105	. DUCT-OUTLET	1	
	F6095	. EXHAUST DUCT ASSEMBLY	1	
-4	B6102	. . BLOCK-UPPER, Exhaust	1	
-5	B6098	. . BLOCK-LOWER, Exhaust	1	
-6	A6103	. . SEALS-BLOCK	2	
-7	B6106	. . GASKET-FRAME, Exhaust	1	
-8	A6097	. . BAR-SIDE	2	
-9	B5513	. . BAR-TOP	1	
-10	B6096	. . BAR-BOTTOM	1	
-11	D6094	. . DUCT-EXHAUST	1	
-12	C5525X12	. BULKHEAD UNION (The Weatherhead Co.)	2	
-13	A6114	. WASHER-SEALING, Upper	2	
-14	A6113	. WASHER-SEALING, Lower	2	
-15	7924X12	. BULKHEAD NUT (The Weatherhead Co.)	2	
-16	30JX18	. FILTER, 30 Ampere at 250 V.A.C. (Sprague Electric) ...	4	
-17	3NC50	. VALVE-MASTER, Air pressure (Bellows Valvair Co.) ...	1	
-18	PO-63-A	. VALVE, Drive latch assembly (Bellows Valvair Co.)	2	
-19	PC-63-A	. VALVE, Center light seal	1	
-20	A5025	. PLUG-HOLE, Bolt	8	

Approved For Release 2005/02/17 : CIA-RDP78B04770A001600030001-2

Approved For Release 2005/02/17 : CIA-RDP78B04770A001600030001-2

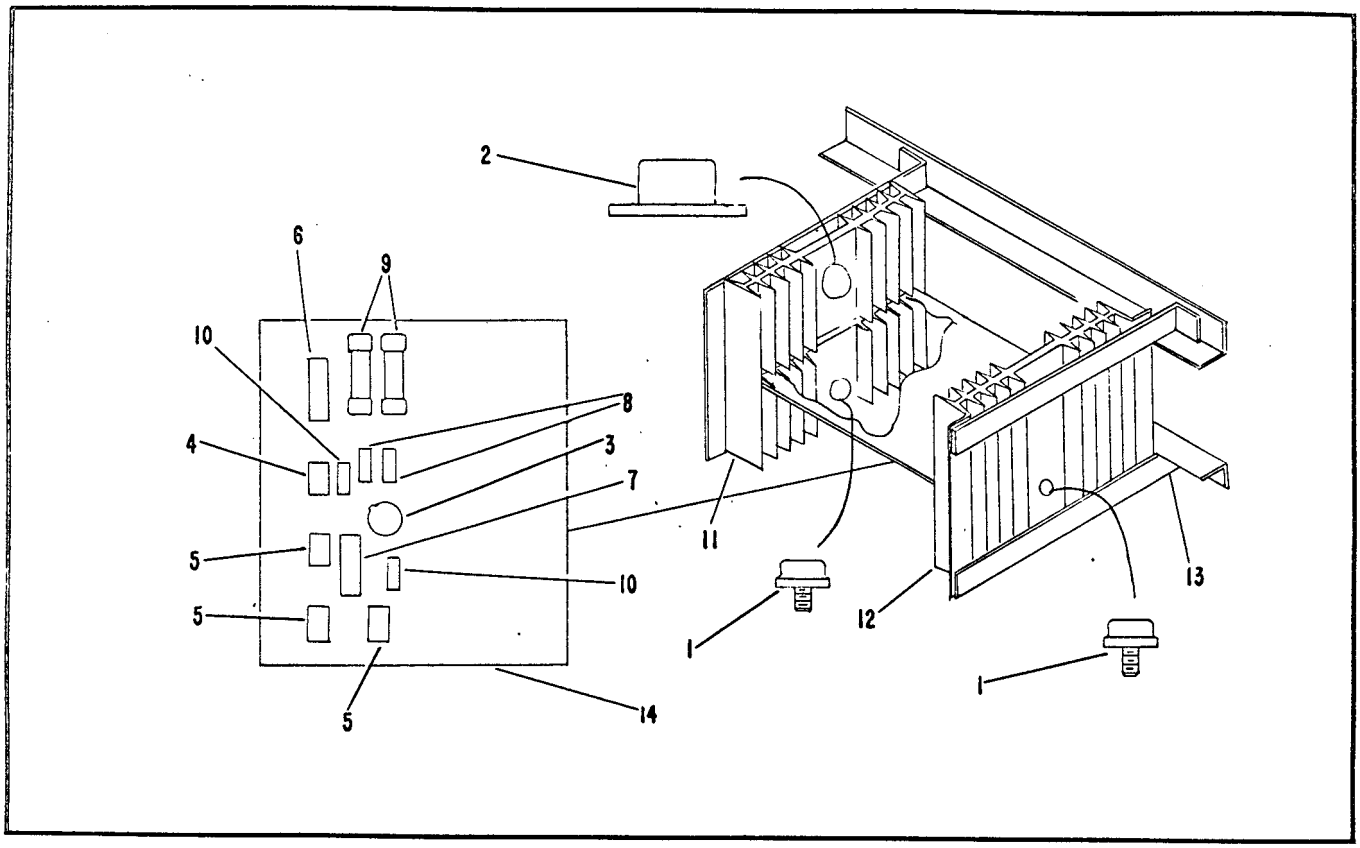

Figure 8-31. Voltage Divider

FIG. & INDEX NO.	PART NUMBER	DESCRIPTION 1 2 3 4 5 6 7	UNITS PER ASSY	USABLE ON CODE
8-31	D6177	VOLTAGE DIVIDER (See Index 13, Figure 8-4 for NHA).....	1	
-1	2N3200	. TRANSISTOR, Q26, Q29.....	2	
-2	2N3186	. TRANSISTOR, Q27.....	1	
-3	2N2905	. TRANSISTOR, Q28.....	1	
-4	1N763-3	. DIODE-ZENER, RB2.....	1	
-5	1N763-2	. DIODE-ZENER, RB3, RB4, RB5.....	3	
-6	1.8K	. RESISTOR, 2 Watt, R44.....	1	
-7	1.3K	. RESISTOR, 2 Watt, R45.....	1	
-8	1 Ohm	. RESISTOR, 1/2 Watt, R46, R47.....	2	
-9	COMM	. FUSE, 1/2 Amp slow blow.....	2	
-10	1 mfd	. CAPACITOR, 50V, Tantalum, C7, C8.....	2	
-11	D6177-2	. HEAT SINK.....	1	
-12	D6177-3	. HEAT SINK.....	1	
-13	D6177-4	. BRACKET-MOUNTING.....	4	
-14	D6177-5	. CHASSIS-COMPONENT.....	1	

Approved For Release 2005/02/17 : CIA-RDP78B04770A001600030001-2

Approved For Release 2005/02/17 : CIA-RDP78B04770A001600030001-2

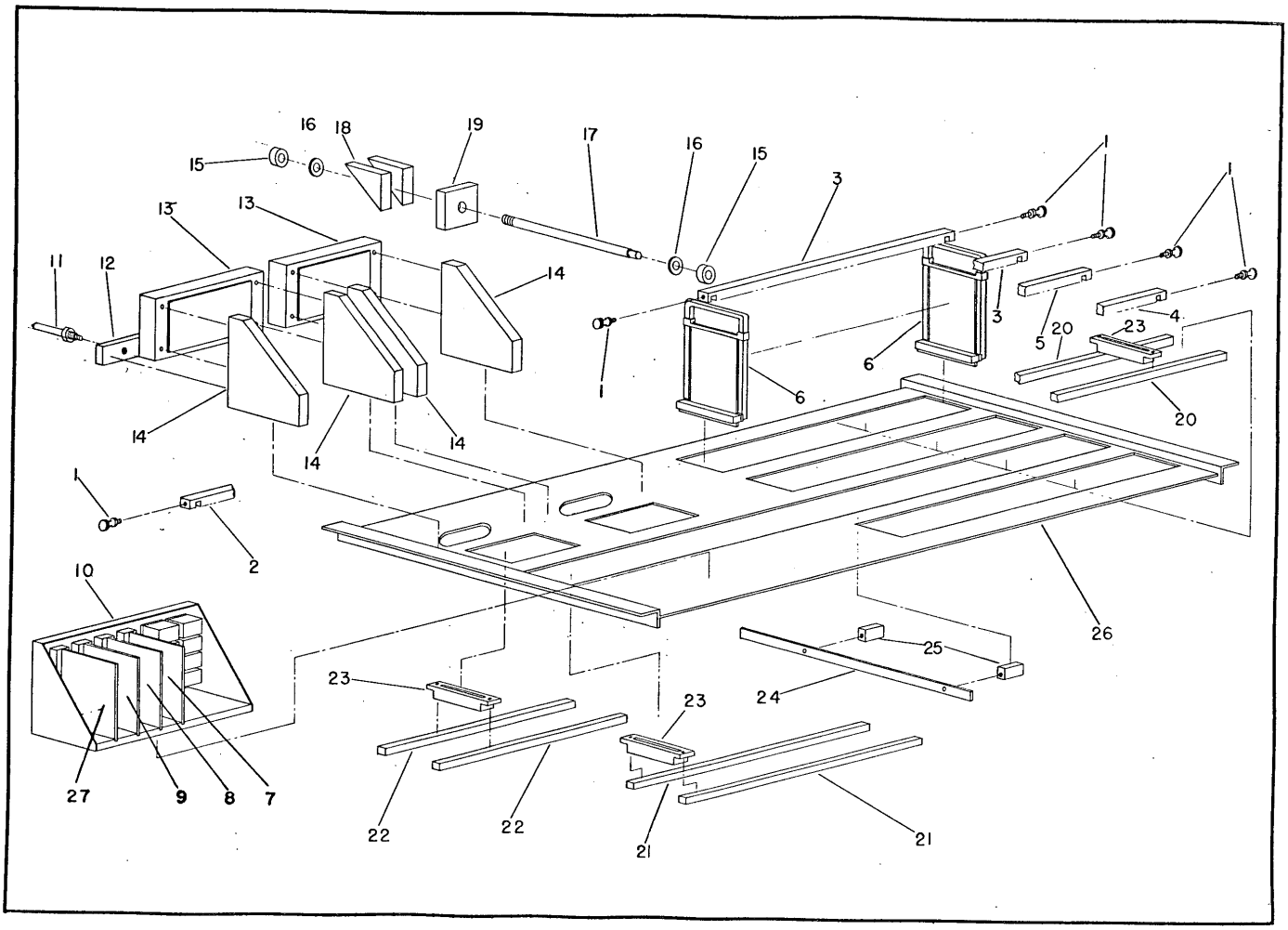

Figure 8-32. Lamp Dodge Chassis

Approved For Release 2005/02/17 : CIA-RDP78B04770A001600030001-2

Approved For Release 2005/02/17 : CIA-RDP78B04770A001600030001-2

FIG. & INDEX NO.	PART NUMBER	DESCRIPTION 1 2 3 4 5 6 7	UNITS PER ASSY	USABLE ON CODE
8-32	F5935	LAMP DODGE CHASSIS (See Index 19, Figure 8-5 for NHA) .	1	
-1	COMM	. KNURLED SCREW, No. 6-32 by 3/8 lg., brass	16	
-2	B6204-1	. SUPPORT-CIRCUIT BOARD	1	
-3	B6204-2	. SUPPORT-CIRCUIT BOARD	2	
-4	B6204-3	. SUPPORT-CIRCUIT BOARD	1	
-5	B6204-4	. SUPPORT-CIRCUIT BOARD	1	
-6	F5771	. CIRCUIT BOARD ASSEMBLY	96	
-7	D6369	. CIRCUIT BOARD X1, Exposure control (See figure 8-35) ..	1	
-8	D6368	. CIRCUIT BOARD X2, Exposure control (See figure 8-36) ..	1	
-9	D6367	. CIRCUIT BOARD X3, Exposure control (See figure 8-37) ..	1	
-10	F6159	. CONTROL ASSEMBLY, (See figure 8-33)	1	
-11	B5928	. GROUND PIN	1	
-12	B5918	. GROUND PIN MOUNTING BLOCK	1	
-13	QRE-208-P	. PLUG, Electrical (Winchester Electronics)	2	
-14	B5929	. CONNECTOR MOUNTING BLOCK	4	
	D6310	. JACK SCREW	1	
-15	A6206	. . COLLAR-JACK SCREW	2	
-16	D6310-6	. . BEARING, Jack screw	2	
-17	A6205	. . SCREW-JACK	1	
-18	B6208	. . BAR-SUPPORT	2	
-19	B6207	. . PLATE-MOUNTING	1	
-20	B5926	. 17 UNIT BAR NUT	8	
-21	B5925	. 16 UNIT BAR NUT	2	
-22	B5931	. 10 UNIT BAR NUT	2	
-23	B5794	. RECEPTACLE, Electrical	96	
-24	B5933	. GROUND BUSS BAR	1	
-25	B5932	. GROUND BUSS BAR MOUNTING BLOCK	2	
-26	D5916	. LAMP DODGE CIRCUIT BOARD CHASSIS	1	
-27	D6419	. CIRCUIT BOARD X4, Exposure Control (See figure 8-38) .	1	

Approved For Release 2005/02/17 : CIA-RDP78B04770A001600030001-2

Approved For Release 2005/02/17 : CIA-RDP78B04770A001600030001-2

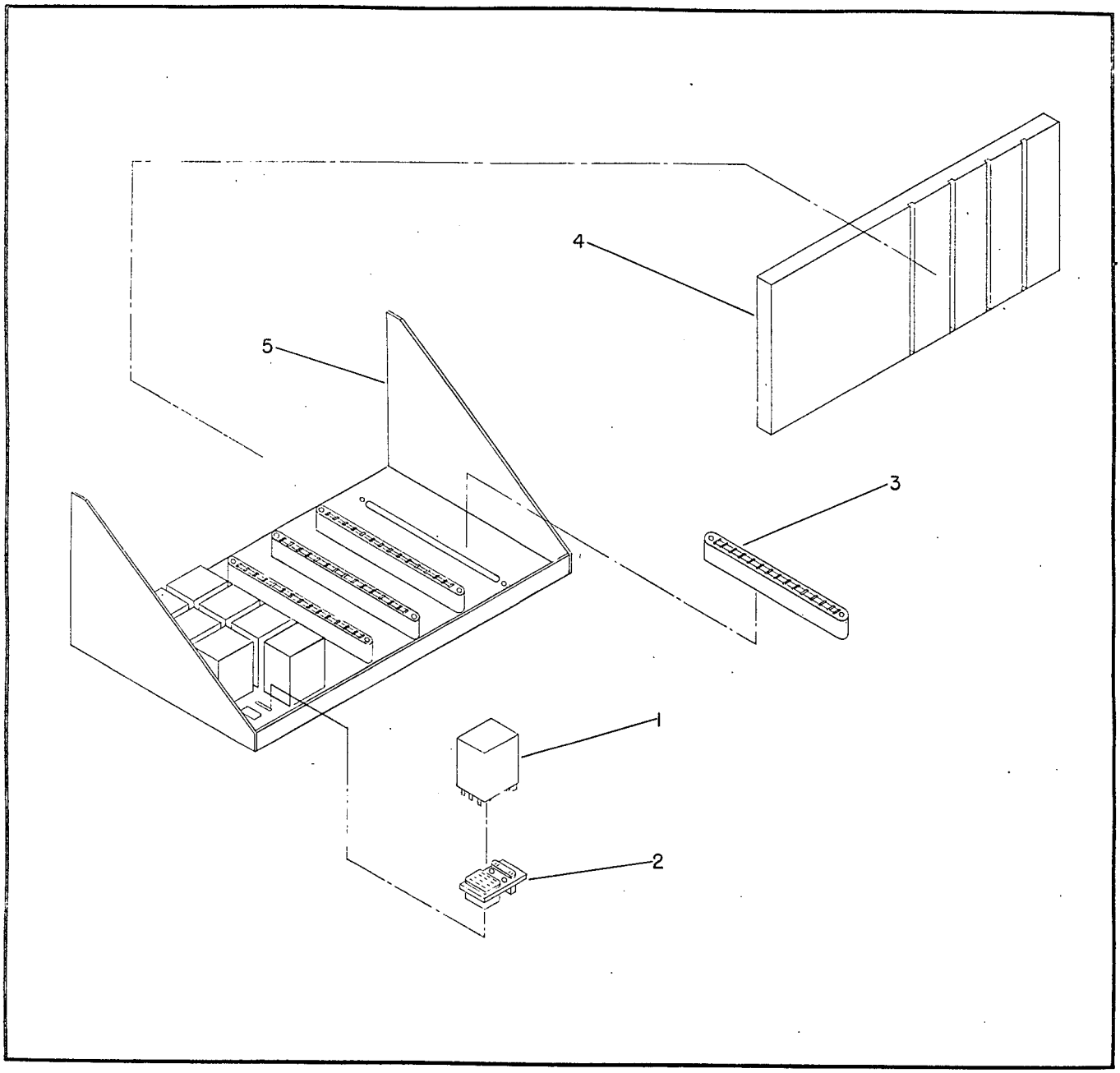

Figure 8-33. Control Assembly

FIG. & INDEX NO.	PART NUMBER	DESCRIPTION 1 2 3 4 5 6 7	UNITS PER ASSY	USABLE ON CODE
8-33		CONTROL ASSEMBLY (See Index 10, Figure 8-32 for NHA) .	1	
-1	T163-4C	. RELAY.....	8	
-2	300552	. SOCKET-RELAY	8	
-3	R616-1	. CONNECTOR-BOARD	4	
-4	F6159-2	. BASE	1	
-5	F6159-3	. CHASSIS	1	

Approved For Release 2005/02/17 : CIA-RDP78B04770A001600030001-2

Approved For Release 2005/02/17 : CIA-RDP78B04770A001600030001-2

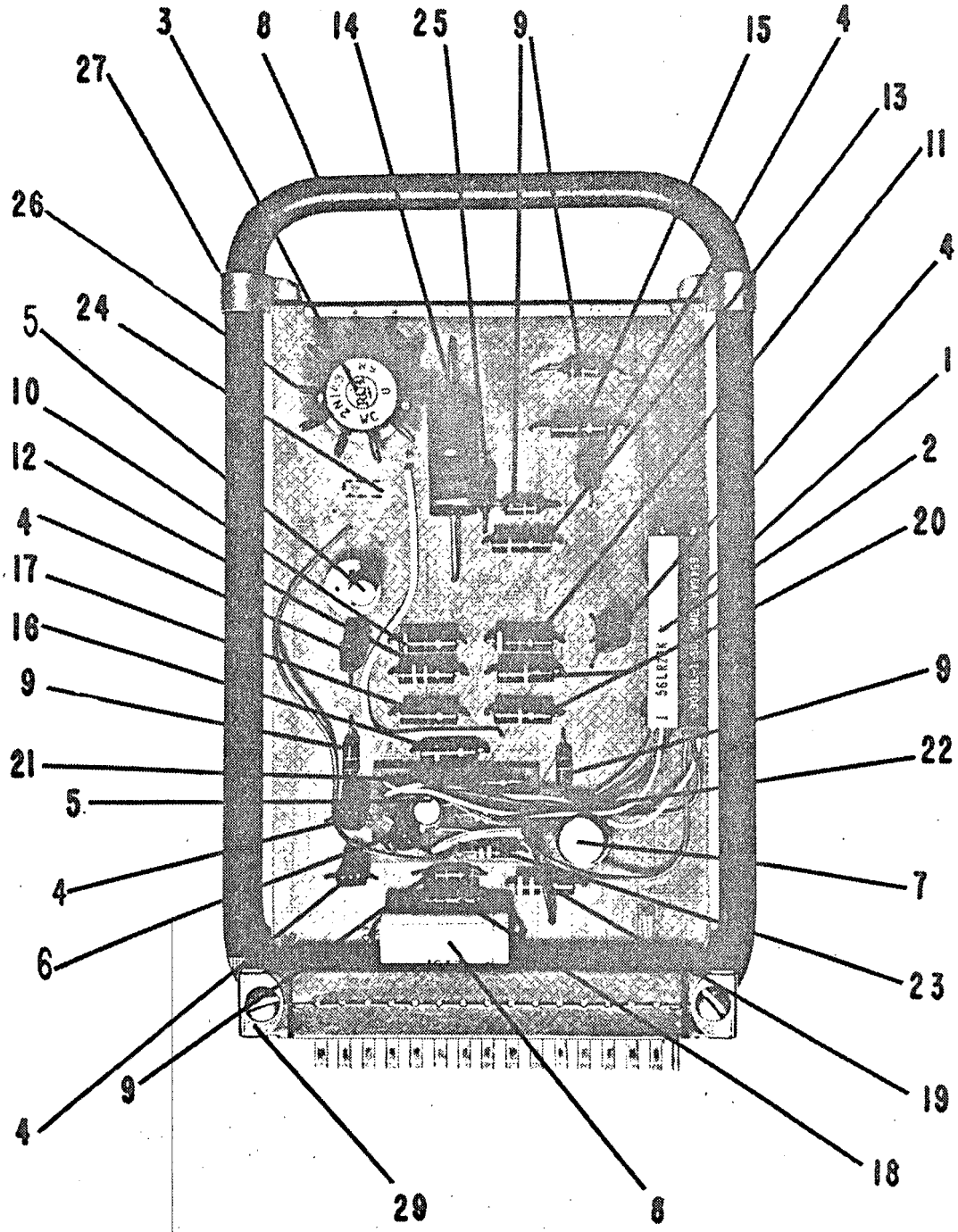

Figure 8-34. Circuit Board Assembly, Lamp

Approved For Release 2005/02/17 : CIA-RDP78B04770A001600030001-2

Approved For Release 2005/02/17 : CIA-RDP78B04770A001600030001-2

FIG. & INDEX NO.	PART NUMBER	DESCRIPTION 1 2 3 4 5 6 7	UNITS PER ASSY	USABLE ON CODE
8-34	F5771	CIRCUIT BOARD ASSEMBLY, Lamp (See Index 6, Figure 8-32)	96	
-1	3051L1-505	. POTENTIOMETER, R16 (Bournes)	96	
-2	56LR20K	. POTENTIOMETER, R17 (Beckman Helitrim)	96	
-3	2N1483	. TRANSISTOR, Q8	96	
-4	2N3704	. TRANSISTOR, Q1, Q2, Q3, Q4, Q7	480	
-5	2N930	. TRANSISTOR, Q5, Q10	96	
-6	2N3702	. TRANSISTOR, Q9	96	
-7	2N2905	. TRANSISTOR, Q6	96	
-8		. CAPACITOR, 1 mf @ 50 W V.D.C.	96	
-9	1N459	. DIODE, CR1, CR2, CR3, CR4, CR5	480	
-10	7.5K	. RESISTOR, 1/2 watt, R1	96	
-11	9.1K	. RESISTOR, 1/2 watt, R2	96	
-12	24K	. RESISTOR, 1/2 watt, R3	96	
-13	1.8K	. RESISTOR, 1/2 watt, R4	96	
-14	360 ohms	. RESISTOR, Two (2) watts, R5	96	
-15	5.1K	. RESISTOR, 1/2 watt, R6	96	
-16	6.8K	. RESISTOR, 1/2 watt, R7	96	
-17	1K	. RESISTOR, 1/2 watt, R8	96	
-18	2.2K	. RESISTOR, 1/2 watt, R10	96	
-19	47K	. RESISTOR, 1/2 watt, R11	96	
-20	22K	. RESISTOR, 1/2 watt, R12 & R12A	192	
-21	150 ohms	. RESISTOR, 1/2 watt, R13	96	
-22	3.9K	. RESISTOR, 1/2 watt, R14	96	
-23	3900 ohms	. RESISTOR, 1/4 watt, R15	96	
-24	20K	. RESISTOR, 1/2 watt, R88	96	
-25	1N757	. DIODE-ZENER, RB20	96	
-26	NF211	. HEAT SINK (Wakefield)	96	
-27	B5913	. CLAMP	96	
-28	B5698	. HANDLE	96	
-29	133-015-03	. CONNECTOR (Amphenol Electronics Corp.)	96	

Approved For Release 2005/02/17 : CIA-RDP78B04770A001600030001-2

Approved For Release 2005/02/17 : CIA-RDP78B04770A001600030001-2

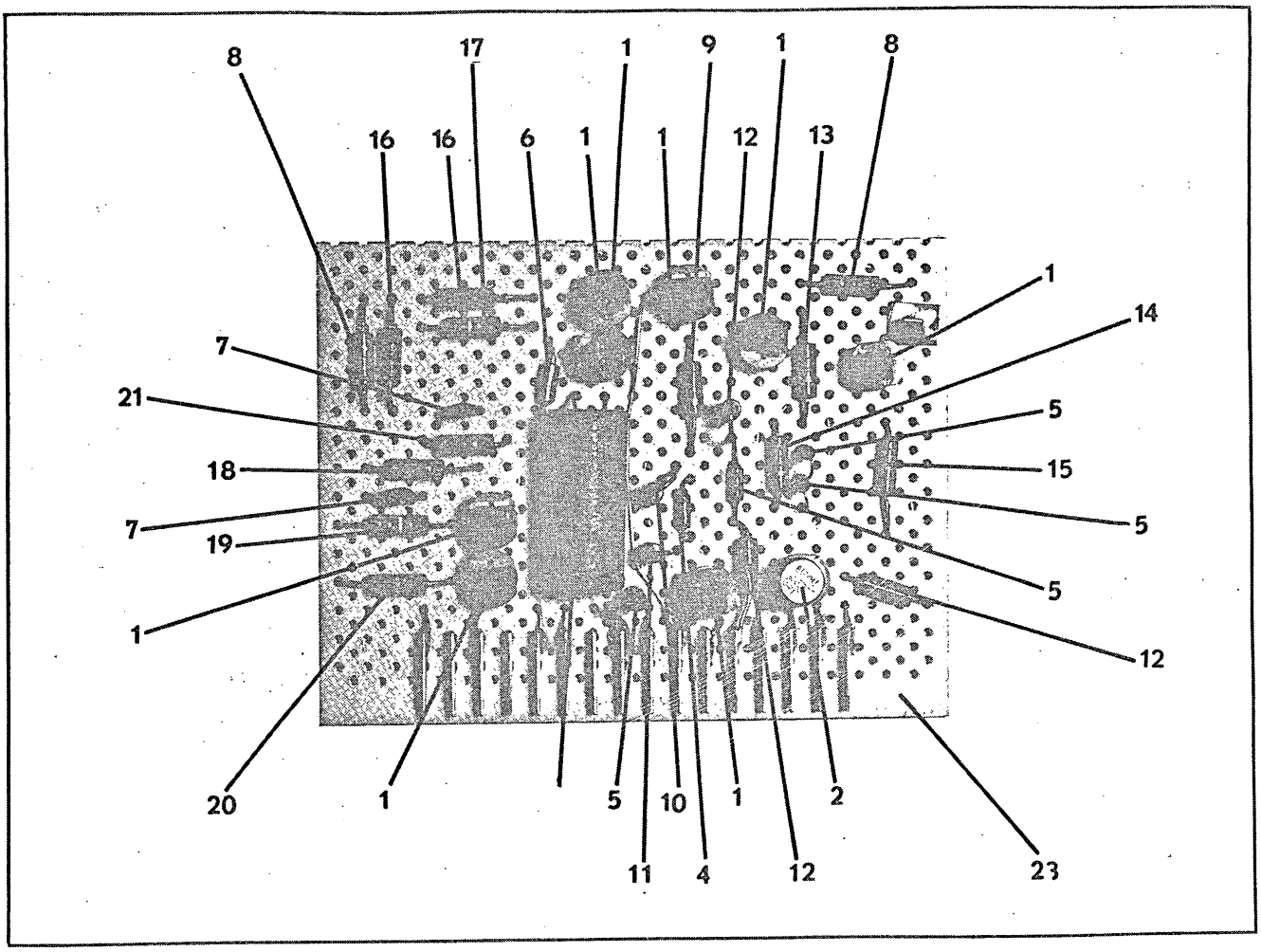

Figure 8-35. Circuit Board X1, Exposure Control

Approved For Release 2005/02/17 : CIA-RDP78B04770A001600030001-2

Approved For Release 2005/02/17 : CIA-RDP78B04770A001600030001-2

FIG. & INDEX NO.	PART NUMBER	DESCRIPTION 1 2 3 4 5 6 7	UNITS PER ASSY	USABLE ON CODE
8-35	D6369	CIRCUIT BOARD X1, Exposure control (See Index 7, Figure 8-32 for NHA)	1	
-1	2N3704	. TRANSISTOR, Q1, Q2, Q3, Q5, Q6, Q8, and Q9	7	
-2	2N2219	. TRANSISTOR, Q4	1	
-3	2N3702	. TRANSISTOR, Q7	1	
-4	1N748A	. DIODE, CR1	1	
-5	1N459	. DIODE, CR2, CR3, CR4, CR5, CR6, and CR7	6	
-6	.68 mfd	. CAPACITOR, C1	1	
-7	82 Pf	. CAPACITOR, C2, and C3	2	
-8	5.1K	. RESISTOR, 1/2 Watt, 5% Tolerance, R1, and R13	2	
-9	2.2K	. RESISTOR, 1/2 Watt, 5% Tolerance, R2	1	
-10	560 Ohm	. RESISTOR, 1/2 Watt, 5% Tolerance, R3	1	
-11	6.8K	. RESISTOR, 1/2 Watt, 5% Tolerance, R4	1	
-12	2.7K	. RESISTOR, 1/2 Watt, 5% Tolerance, R5, R6, and R9	3	
-13	8.2K	. RESISTOR, 1/2 Watt, 5% Tolerance, R7	1	
-14	1.5K	. RESISTOR, 1/2 Watt, 5% Tolerance, R8	1	
-15	22K	. RESISTOR, 1/2 Watt, 5% Tolerance, R10	1	
-16	3K	. RESISTOR, 1/2 Watt, 5% Tolerance, R11, R18	2	
-17	680K	. RESISTOR, 1/2 Watt, 5% Tolerance, R12	1	
-18	30K	. RESISTOR, 1/2 Watt, 5% Tolerance, R14	1	
-19	75K	. RESISTOR, 1/2 Watt, 5% Tolerance, R15	1	
-20	300K	. RESISTOR, 1/2 Watt, 5% Tolerance, R16	1	
-21	10K	. RESISTOR, 1/2 Watt, 5% Tolerance, R17	1	
-22	7.5 K	. RESISTOR, 1/2 Watt, 5% Tolerance, R19	1	
-23	812	. VECTOR BOARD (ELCO)	1	

Approved For Release 2005/02/17 : CIA-RDP78B04770A001600030001-2

Approved For Release 2005/02/17 : CIA-RDP78B04770A001600030001-2

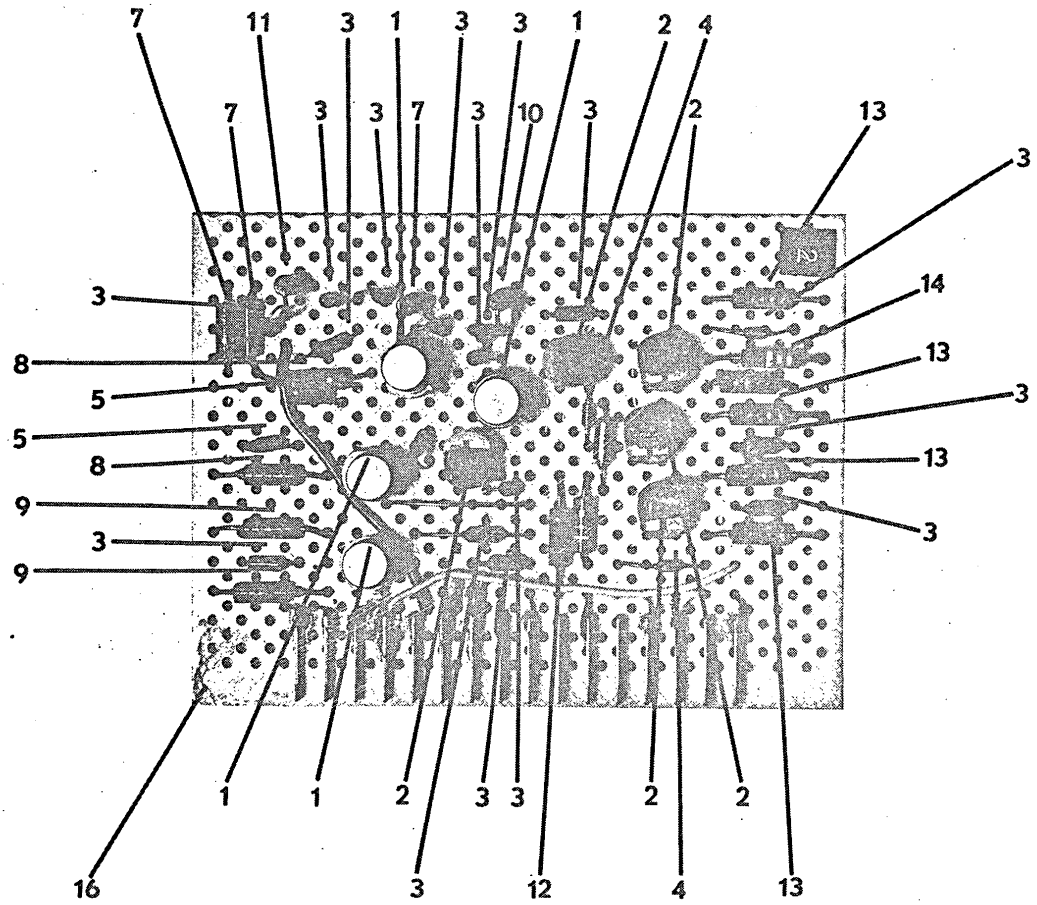

Figure 8-36. Circuit Board X2, Exposure Control

Approved For Release 2005/02/17 : CIA-RDP78B04770A001600030001-2

Approved For Release 2005/02/17 : CIA-RDP78B04770A001600030001-2

FIG. & INDEX NO.	PART NUMBER	DESCRIPTION 1 2 3 4 5 6 7	UNITS PER ASSY	USABLE ON CODE
8-36	D6368	CIRCUIT BOARD X2, Exposure control (See Index 8, Figure 8-32 for NHA)	1	
-1	2N2219	. TRANSISTOR, Q1, Q2, Q3, and Q4	4	
-2	2N3704	. TRANSISTOR, Q5, Q6, Q7, Q8, and Q9	5	
-3	1N459	. DIODE, CR1 thru CR14, CR16, CR17 and CR19	17	
-4	1N914	. DIODE CR15 and CR18	2	
-5	330 Pf	. CAPACITOR, C1, and C2	2	
-6	.68 mfd	. CAPACITOR, C3	1	
-7	2.7K	. RESISTOR, 1/2 Watt, 5% Tolerance, R1, R6, and R9	3	
-8	7.5K	. RESISTOR, 1/2 Watt, 5% Tolerance, R2, and R5	2	
-9	20K	. RESISTOR, 1/2 Watt, 5% Tolerance, R3 and R4	2	
-10	27K	. RESISTOR, 1/2 Watt, 5% Tolerance, R7	1	
-11	22K	. RESISTOR, 1/2 Watt, 5% Tolerance, R8, and R17	2	
-12	30K	. RESISTOR, 1/2 Watt, 5% Tolerance, R10	1	
-13	3K	. RESISTOR, 1/2 Watt, 5% Tolerance, R11, R13, R14, and R15	4	
-14	680K	. RESISTOR, 1/2 Watt, 5% Tolerance, R12	1	
-15	22K	. RESISTOR, 1/2 Watt, 5% Tolerance, R16	1	
-16	812	. VECTOR BOARD (ELCO)	1	

Approved For Release 2005/02/17 : CIA-RDP78B04770A001600030001-2

Approved For Release 2005/02/17 : CIA-RDP78B04770A001600030001-2

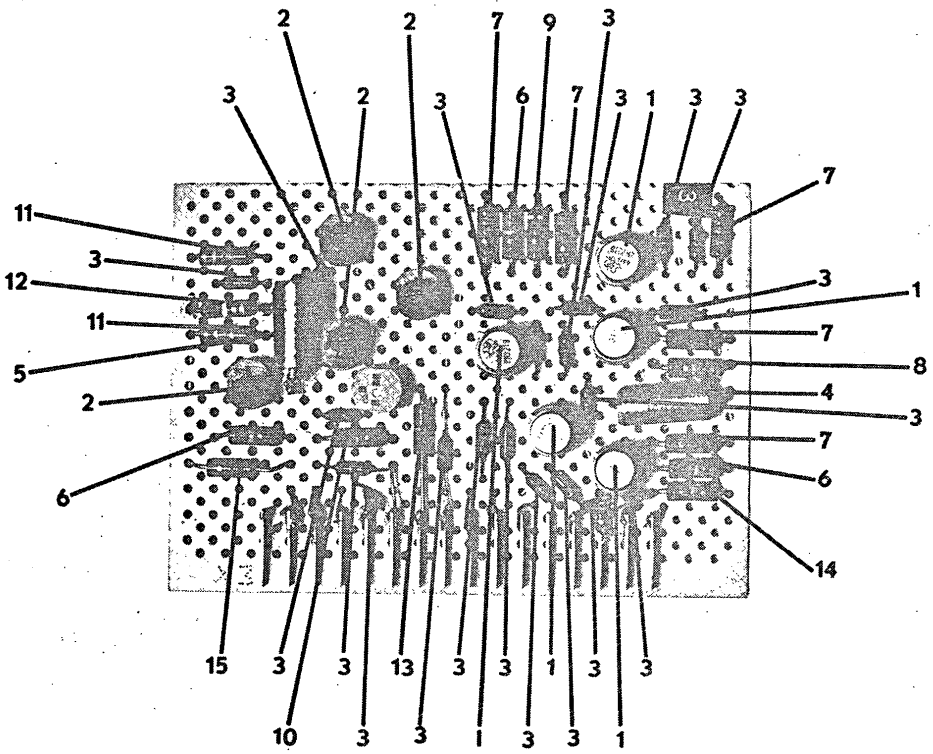

Figure 8-37. Circuit Board X3, Exposure Control

Approved For Release 2005/02/17 : CIA-RDP78B04770A001600030001-2

Approved For Release 2005/02/17 : CIA-RDP78B04770A001600030001-2

FIG. & INDEX NO.	PART NUMBER	DESCRIPTION 1 2 3 4 5 6 7	UNITS PER ASSY	USABLE ON CODE
8-37	D6367	CIRCUIT BOARD X3, Exposure control (See Index 9, Figure 8-32 for NHA)	1	
-1	2N2219	. TRANSISTOR, Q1, Q2, Q3, Q4, and Q5	5	
-2	2N3704	. TRANSISTOR, Q6, Q7, Q8, and Q9	4	
-3	1N459	. DIODE, CR1 thru CR18	18	
-4	10 mfd	. CAPACITOR, C1	1	
-5	2 mfd	. CAPACITOR, C2	1	
-6	27K	. RESISTOR, 1/2 Watt, 5% Tolerance, R1, R8 and R10	3	
-7	2.7K	. RESISTOR, 1/2 Watt, 5% Tolerance, R2, R4, R5, R6, and R9	5	
-8	10K	. RESISTOR, 1/2 Watt, 5% Tolerance, R3	1	
-9	4.7K	. RESISTOR, 1/2 Watt, 5% Tolerance, R7	1	
-10	6.8K	. RESISTOR, 1/2 Watt, 5% Tolerance, R11	1	
-11	3K	. RESISTOR, 1/2 Watt, 5% Tolerance, R12, and R14	2	
-12	330K	. RESISTOR, 1/2 Watt, 5% Tolerance, R13	1	
-13	12K	. RESISTOR, 1/2 Watt, 5% Tolerance, R15	1	
-14	22K	. RESISTOR, 1/2 Watt, 5% Tolerance, R16	1	
-15	2K	. RESISTOR, 1/2 Watt, 5% Tolerance, R17	1	
-16	812	. VECTOR BOARD (ELCO)	1	

Approved For Release 2005/02/17 : CIA-RDP78B04770A001600030001-2

Approved For Release 2005/02/17 : CIA-RDP78B04770A001600030001-2

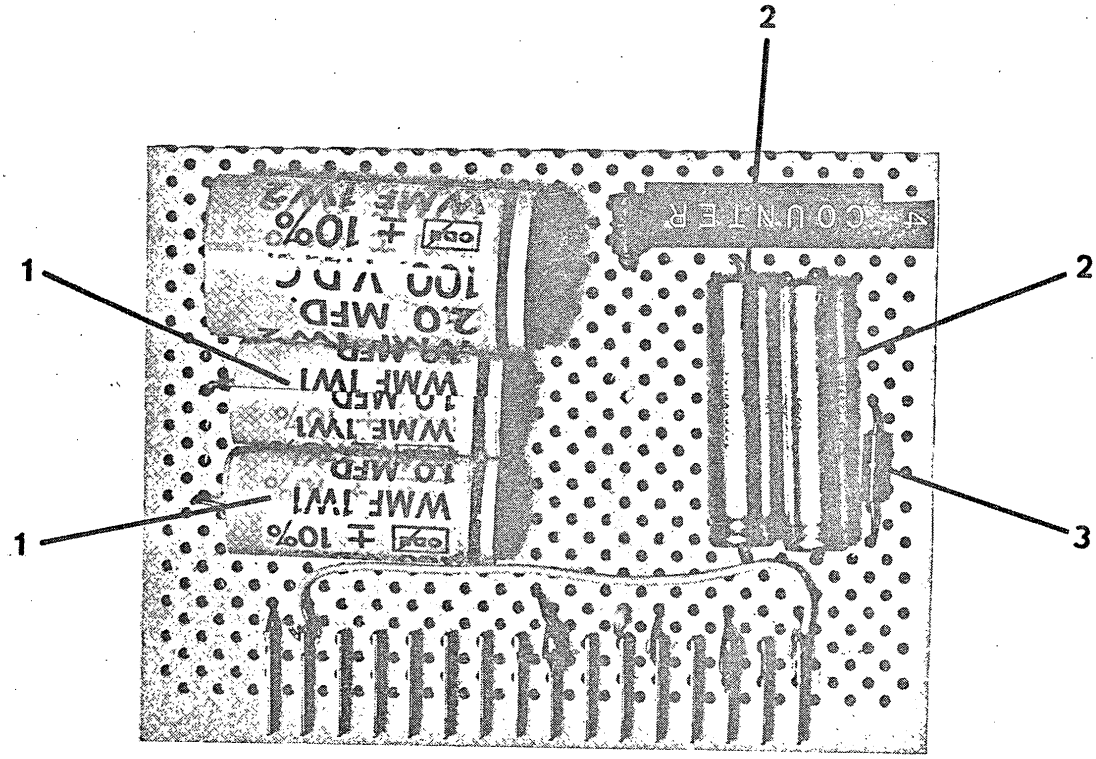

Figure 8-38. Circuit Board X4 Exposure Control

Approved For Release 2005/02/17 : CIA-RDP78B04770A001600030001-2

Approved For Release 2005/02/17 : CIA-RDP78B04770A001600030001-2

FIG. & INDEX NO.	PART NUMBER	DESCRIPTION 1 2 3 4 5 6 7	UNITS PER ASSY	USABLE ON CODE
8-38	D6419	CIRCUIT BOARD X4 (See Index 27, figure 8-32)	1	
-1	1 mfd	. CAPACITOR, Mylar, 100 Volt, C1 and C2	2	
-2	120 mfd	. CAPACITOR, Polarized tantalum, 35 Volt, C3 and C4	2	
-3	100 ohm	. RESISTOR, 1/2 Watt, 5% Tolerance, R1	1	

Approved For Release 2005/02/17 : CIA-RDP78B04770A001600030001-2

Approved For Release 2005/02/17 : CIA-RDP78B04770A001600030001-2

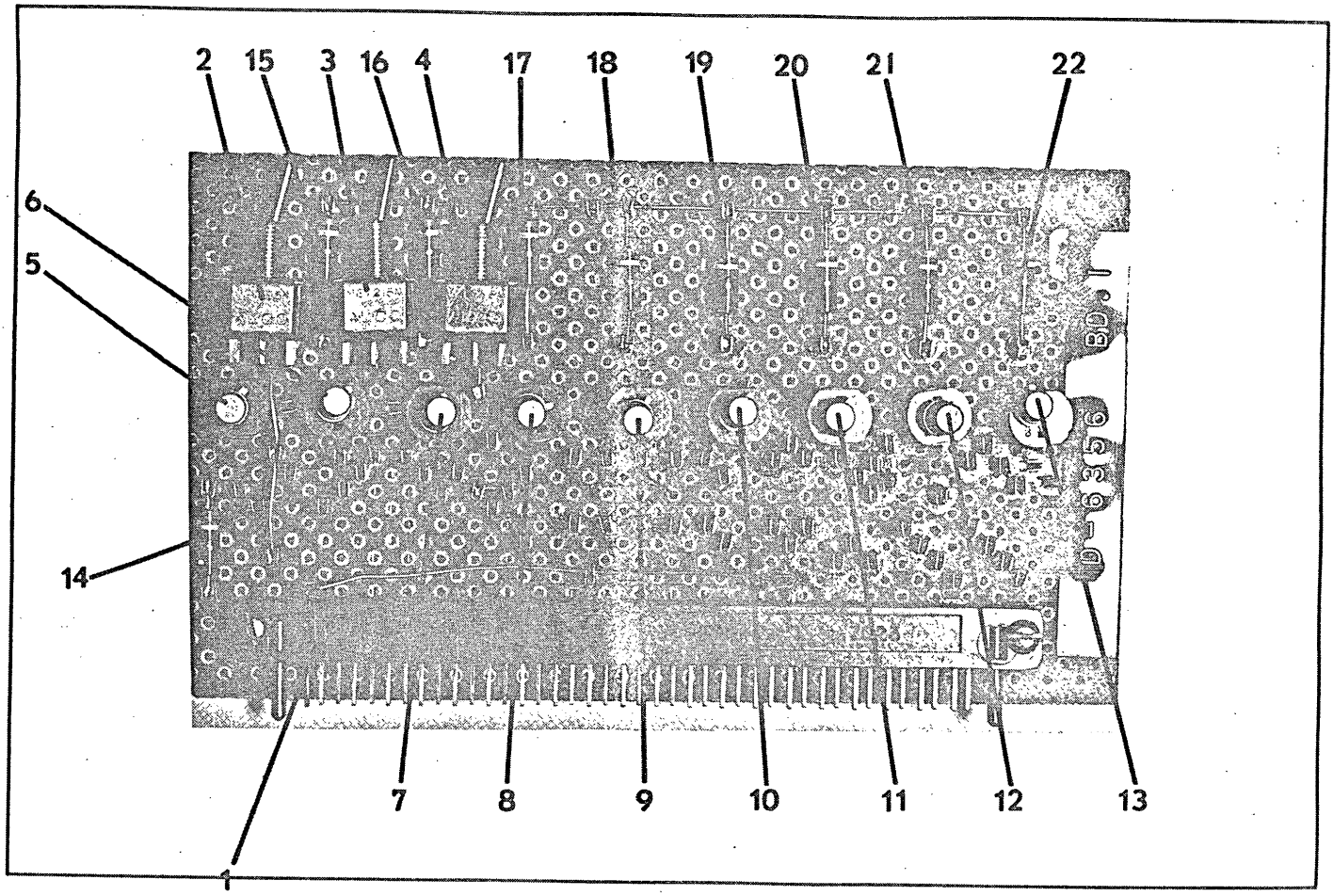

Figure 8-39. Component Board No. One (1)
(SEE frame separation detector wiring diagram)

Approved For Release 2005/02/17 : CIA-RDP78B04770A001600030001-2

Approved For Release 2005/02/17 : CIA-RDP78B04770A001600030001-2

FIG. & INDEX NO.	PART NUMBER	DESCRIPTION 1 2 3 4 5 6 7	UNITS PER ASSY	USABLE ON CODE
8-39	D6356	COMPONENT BOARD NO. 1	1	
-1	7023	. CONNECTOR (ELCO)	1	
		. TOGGLE SWITCH, SPST (Designated as below)	3	
-2		. . SW1		
-3		. . SW2		
-4		. . SW3		
	2N930	. TRANSISTOR (Designated as below)	9	
-5		. . Q1		
-6		. . Q2		
-7		. . Q3		
-8		. . Q4		
-9		. . Q5		
-10		. . Q6		
-11		. . Q7		
-12		. . Q8		
-13		. . Q9		
	3.9K	. RESISTOR, 1/2 Watt, 5% Tolerance (Designated as below)	9	
-14		. . R1		
-15		. . R4		
-16		. . R7		
-17		. . R10		
-18		. . R13		
-19		. . R16		
-20		. . R19		
-21		. . R22		
-22		. . R25		

Approved For Release 2005/02/17 : CIA-RDP78B04770A001600030001-2

Approved For Release 2005/02/17 : CIA-RDP78B04770A001600030001-2

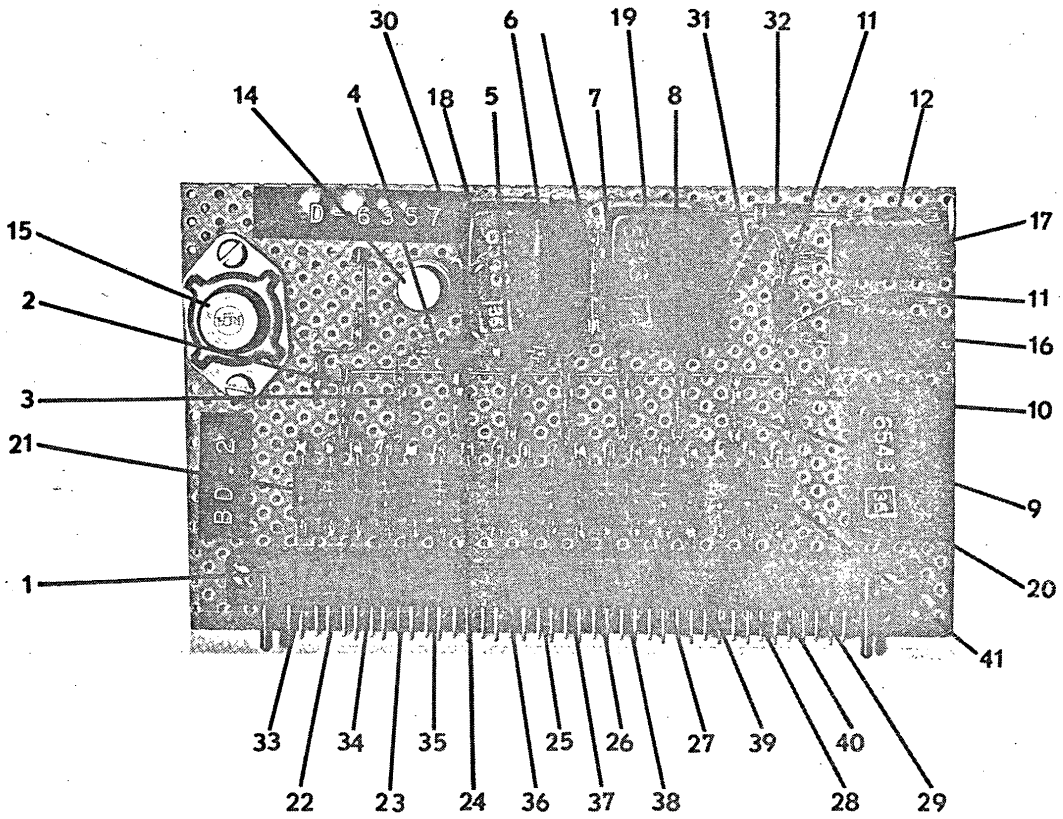

Figure 8-40. Component Board No. Two (2)
(SEE frame separation detector wiring diagram)

Approved For Release 2005/02/17 : CIA-RDP78B04770A001600030001-2

Approved For Release 2005/02/17 : CIA-RDP78B04770A001600030001-2

FIG. & INDEX NO.	PART NUMBER	DESCRIPTION 1 2 3 4 5 6 7	UNITS PER ASSY	USABLE ON CODE
8-40	D6357	COMPONENT BOARD NO. 2	1	
-1	7023	. CONNECTOR (ELCO)	1	
	1N914	. DIODE (Designated as below)	9	
-2		. . CR1		
-3		. . CR2		
-4		. . CR3		
-5		. . CR4		
-6		. . CR5		
-7		. . CR6		
-8		. . CR7		
-9		. . CR8		
-10		. . CR9		
-11	1N758	. DIODE, CR30A and CR30B (Two diodes installed in series; when replacement is necessary, install one (1) diode, No. 1N758	1	
-12	1N746	. DIODE, CR31	1	
-13	1N459	. DIODE, CR76	1	
-14	2N2219	. TRANSISTOR, Q66	1	
-15	2N1483	. TRANSISTOR, Q67	1	
	.1 mfd	. CAPACITOR, 50V (Designated as below)	2	
-16		. . C1		
-17		. . C16		
	35AH5005	. RELAY (General Electric Co.), Designated as below	3	
-18		. . K4		
-19		. . K5		
-20		. . K6		
	1K	. RESISTOR, 1/2 Watt, 5% Tolerance (Designated as below).	9	
-21		. . R2		
-22		. . R5		
-23		. . R8		
-24		. . R11		
-25		. . R14		
-26		. . R17		
-27		. . R20		
-28		. . R23		
-29		. . R26		
-30	1.5K	. RESISTOR, 1/2 Watt, 5% Tolerance, R103	1	
-31	1.8K	. RESISTOR, 1/2 Watt, 5% Tolerance, R40	1	
-32	3.3K	. RESISTOR, 1/2 Watt, 5% Tolerance, R41	1	
	68K	. RESISTOR, 1/2 Watt, 5% Tolerance (Designated as below).	9	
-33		. . R3		
-34		. . R6		
-35		. . R9		
-36		. . R12		
-37		. . R15		
-38		. . R18		
-39		. . R21		
-40		. . R24		
-41		. . R27		

Approved For Release 2005/02/17 : CIA-RDP78B04770A001600030001-2

Approved For Release 2005/02/17 : CIA-RDP78B04770A001600030001-2

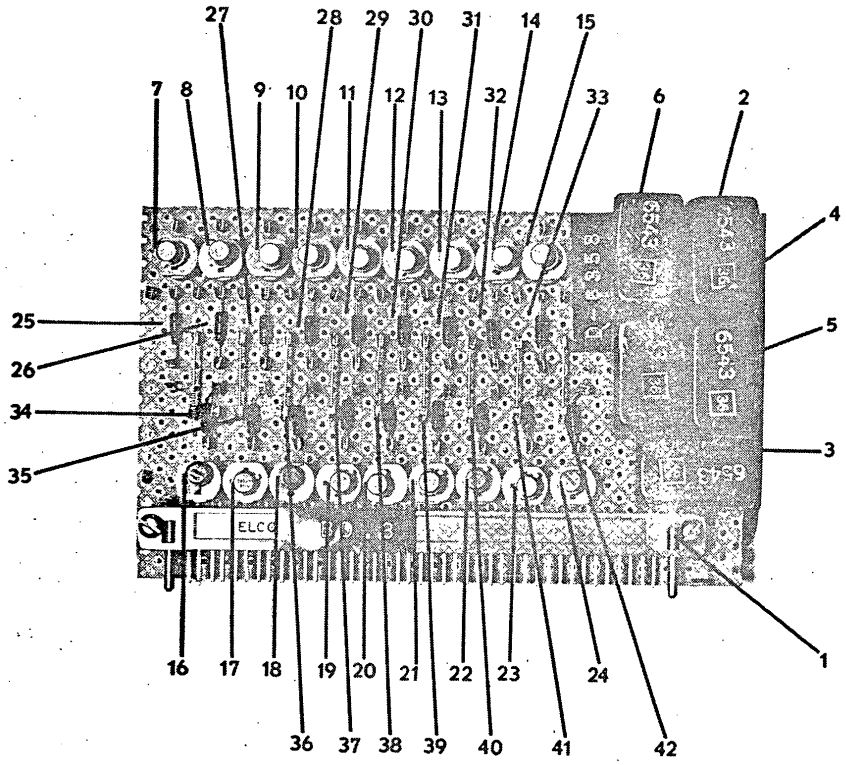

INDEX NOS. 43 THRU 50 MOUNT TO BOTTOM OF BOARD

Figure 8-41. Component Board No. Three (3)
(SEE frame separation detector wiring diagram)

Approved For Release 2005/02/17 : CIA-RDP78B04770A001600030001-2

Approved For Release 2005/02/17 : CIA-RDP78B04770A001600030001-2

FIG. & INDEX NO.	PART NUMBER	DESCRIPTION 1 2 3 4 5 6 7	UNITS PER ASSY	USABLE ON CODE
8-41	D6358	COMPONENT BOARD NO. 3	1	
-1	7023	. CONNECTOR (ELCO)	1	
	35AH5005	. RELAY, General Electric (Designated as below)	5	
-2		. . K6		
-3		. . K9		
-4		. . K10		
-5		. . K11		
-6		. . K12		
	2N930	. TRANSISTOR (Designated as below)	9	
-7		. . Q10		
-8		. . Q11		
-9		. . Q12		
-10		. . Q13		
-11		. . Q14		
-12		. . Q15		
-13		. . Q16		
-14		. . Q17		
-15		. . Q18		
	2N2605	. TRANSISTOR (Designated as below)	9	
-16		. . Q19		
-17		. . Q20		
-18		. . Q21		
-19		. . Q22		
-20		. . Q23		
-21		. . Q24		
-22		. . Q25		
-23		. . Q26		
-24		. . Q27		
	FD600	. DIODE (Designated as below)	18	
-25		. . CR10		
-26		. . CR11		
-27		. . CR12		
-28		. . CR13		
-29		. . CR14		
-30		. . CR15		
-31		. . CR16		
-32		. . CR17		
-33		. . CR18		
-34		. . CR19		
-35		. . CR20		
-36		. . CR21		
-37		. . CR22		
-38		. . CR23		
-39		. . CR24		
-40		. . CR25		
-41		. . CR26		
-42		. . CR27		
	1N459	. DIODE (Designated as below)	8	
-43		. . CR74		
-44		. . CR84		
-45		. . CR85		
-46		. . CR86		
-47		. . CR87		
-48		. . CR88		
-49		. . CR89		
-50		. . CR90		

Approved For Release 2005/02/17 : CIA-RDP78B04770A001600030001-2

Approved For Release 2005/02/17 : CIA-RDP78B04770A001600030001-2

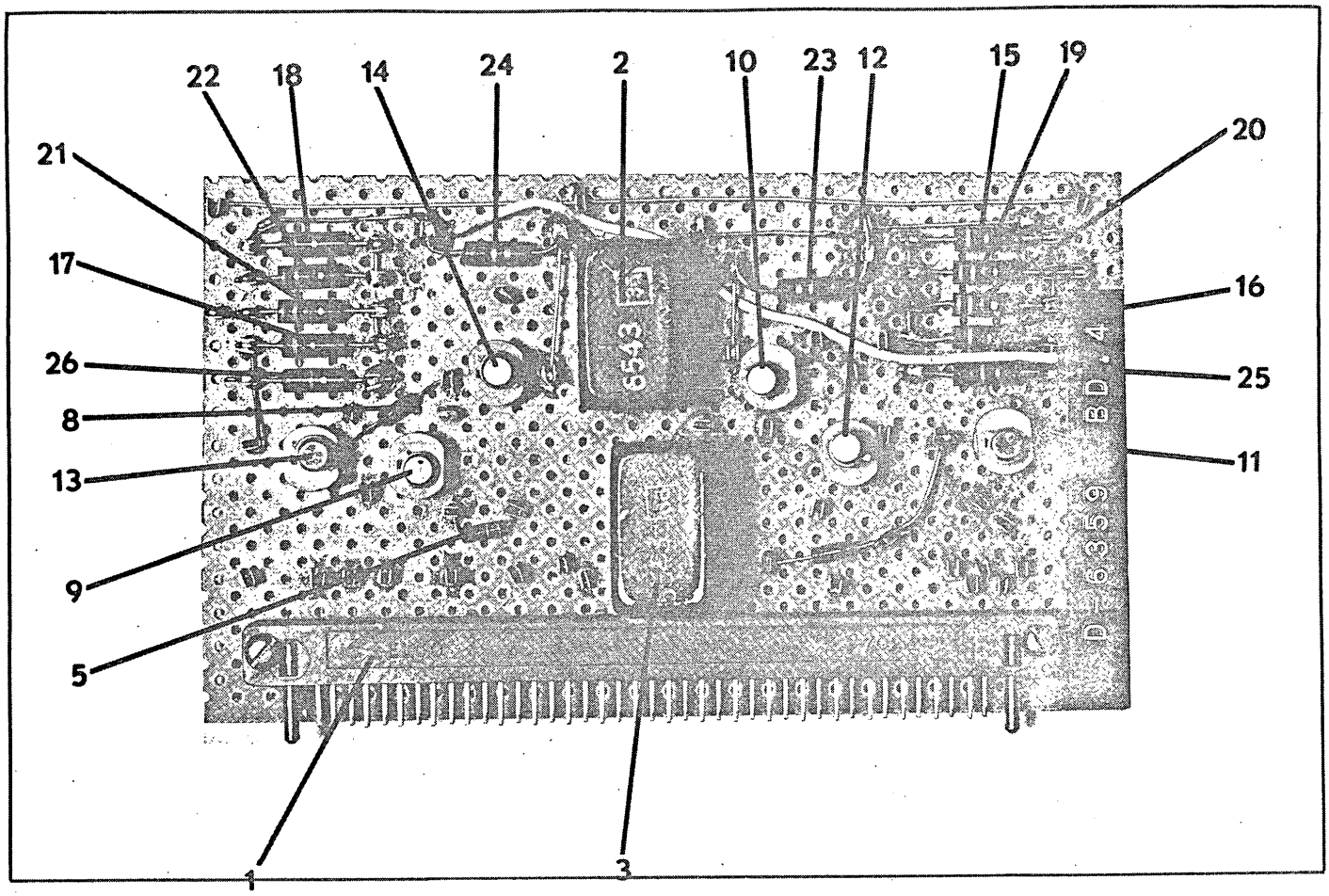

Figure 8-42. Component Board No. Four (4)
(SEE frame separation detector wiring diagram)

Approved For Release 2005/02/17 : CIA-RDP78B04770A001600030001-2

Approved For Release 2005/02/17 : CIA-RDP78B04770A001600030001-2

FIG. & INDEX NO.	PART NUMBER	DESCRIPTION 1 2 3 4 5 6 7	UNITS PER ASSY	USABLE ON CODE
8-42	D6359	COMPONENT BOARD NO. 4	1	
-1	7023	. CONNECTOR (ELCO)	1	
	35AH5005	. RELAY, General Electric (Designated as below)	2	
-2		. . K3		
-3		. . K13		
	1N459	. DIODE (Designated as below)	3	
-4		. . CR77		
-5		. . CR83		
-6		. . CR91		
	FD600	. DIODE (Designated as below)	2	
-7		. . CR28		
-8		. . CR29		
	2N2605	. TRANSISTOR (Designated as below)	3	
-9		. . Q29		
-10		. . Q30		
-11		. . Q31		
	2N930	. TRANSISTOR (Designated as below)	3	
-12		. . Q28		
-13		. . Q32		
-14		. . Q33		
	1.3K	. RESISTOR, 1/2 Watt, 5% Tolerance (Designated as below)	4	
-15		. . R30		
-16		. . R33		
-17		. . R34		
-18		. . R37		
	3.3K	. RESISTOR, 1/2 Watt, 5% Tolerance (Designated as below)	4	
-19		. . R31		
-20		. . R32		
-21		. . R35		
-22		. . R36		
	20K	. RESISTOR, 1/2 Watt, 5% Tolerance (Designated as below)	2	
-23		. . R38		
-24		. . R39		
	75 K	. RESISTOR, 1/2 Watt, 5% Tolerance (Designated as below)	2	
-25		. . R28		
-26		. . R29		

Approved For Release 2005/02/17 : CIA-RDP78B04770A001600030001-2

Approved For Release 2005/02/17 : CIA-RDP78B04770A001600030001-2

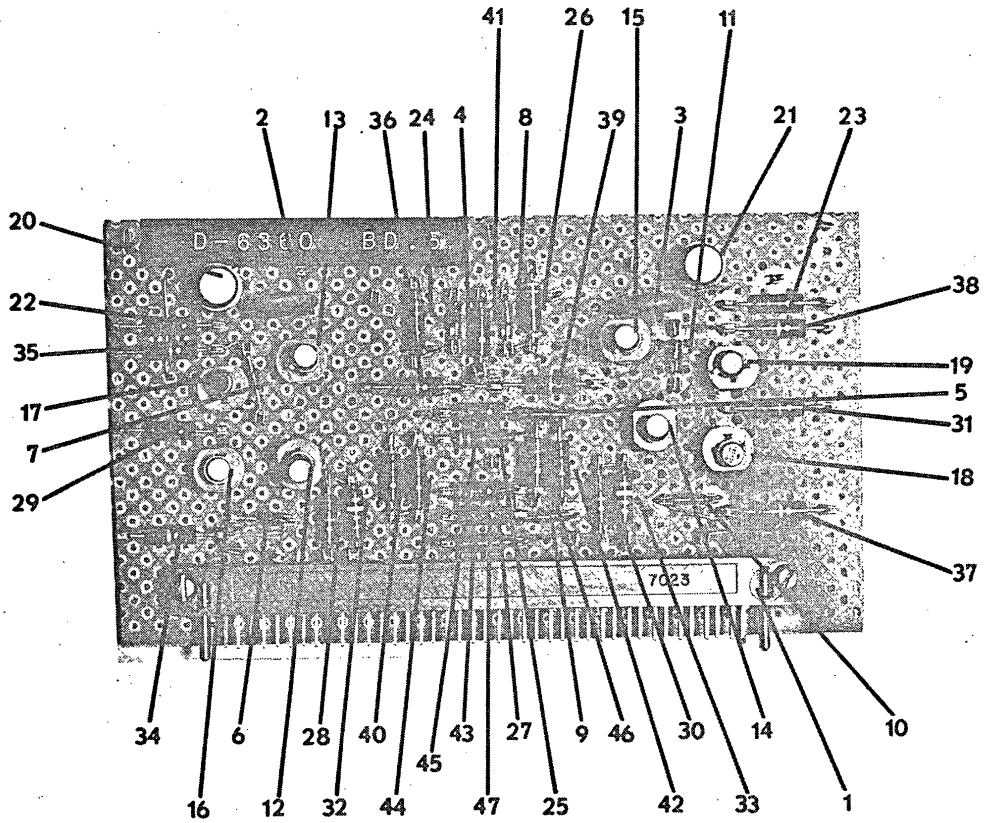

Figure 8-43. Component Board No. Five (5)
(SEE frame separation detector wiring diagram)

Approved For Release 2005/02/17 : CIA-RDP78B04770A001600030001-2

Approved For Release 2005/02/17 : CIA-RDP78B04770A001600030001-2

FIG. & INDEX NO.	PART NUMBER	DESCRIPTION 1 2 3 4 5 6 7	UNITS PER ASSY	USABLE ON CODE
8-43	D6360	COMPONENT BOARD NO. 5	1	
-1	7023	. CONNECTOR (ELCO)	1	
	.005 mfd	. CAPACITOR (Designated as below)	2	
-2		. . C2		
-3		. . C3		
	1N914	. DIODE (Designated as below)	8	
-4		. . CR32		
-5		. . CR33		
-6		. . CR34		
-7		. . CR35		
-8		. . CR36		
-9		. . CR37		
-10		. . CR38		
-11		. . CR39		
	2N930	. TRANSISTOR (Designated as below)	4	
-12		. . Q34		
-13		. . Q37		
-14		. . Q39		
-15		. . Q42		
	2N2605	. TRANSISTOR (Designated as below)	4	
-16		. . Q35		
-17		. . Q36		
-18		. . Q40		
-19		. . Q41		
	2N2219	. TRANSISTOR (Designated as below)	2	
-20		. . Q38		
-21		. . Q43		
	2.2K	. RESISTOR, 1/2 Watt, 5% Tolerance (Designated as below).	2	
-22		. . R54		
-23		. . R67		
	3.3K	. RESISTOR, 1/2 Watt, 5% Tolerance (Designated as below).	4	
-24		. . R42		
-25		. . R47		
-26		. . R55		
-27		. . R60		
	10K	. RESISTOR, 1/2 Watt, 5% Tolerance (Designated as below).	4	
-28		. . R49		
-29		. . R51		
-30		. . R62		
-31		. . R64		
	39K	. RESISTOR, 1/2 Watt, 5% Tolerance (Designated as below).	2	
-32		. . R48		
-33		. . R61		
	51K	. RESISTOR, 1/2 Watt, 5% Tolerance (Designated as below).	6	
-34		. . R50		
-35		. . R52		
-36		. . R53		
-37		. . R63		
-38		. . R65		
-39		. . R66		
	100 ohm	. RESISTOR, 1/2 Watt, 5% Tolerance (Designated as below).	4	
-40		. . R44		
-41		. . R45		
-42		. . R57		
-43		. . R58		
	220 ohm	. RESISTOR, 1/2 Watt, 5% Tolerance (Designated as below).	4	
-44		. . R43		
-45		. . R46		
-46		. . R56		
-47		. . R59		

Approved For Release 2005/02/17 : CIA-RDP78B04770A001600030001-2

Approved For Release 2005/02/17 : CIA-RDP78B04770A001600030001-2

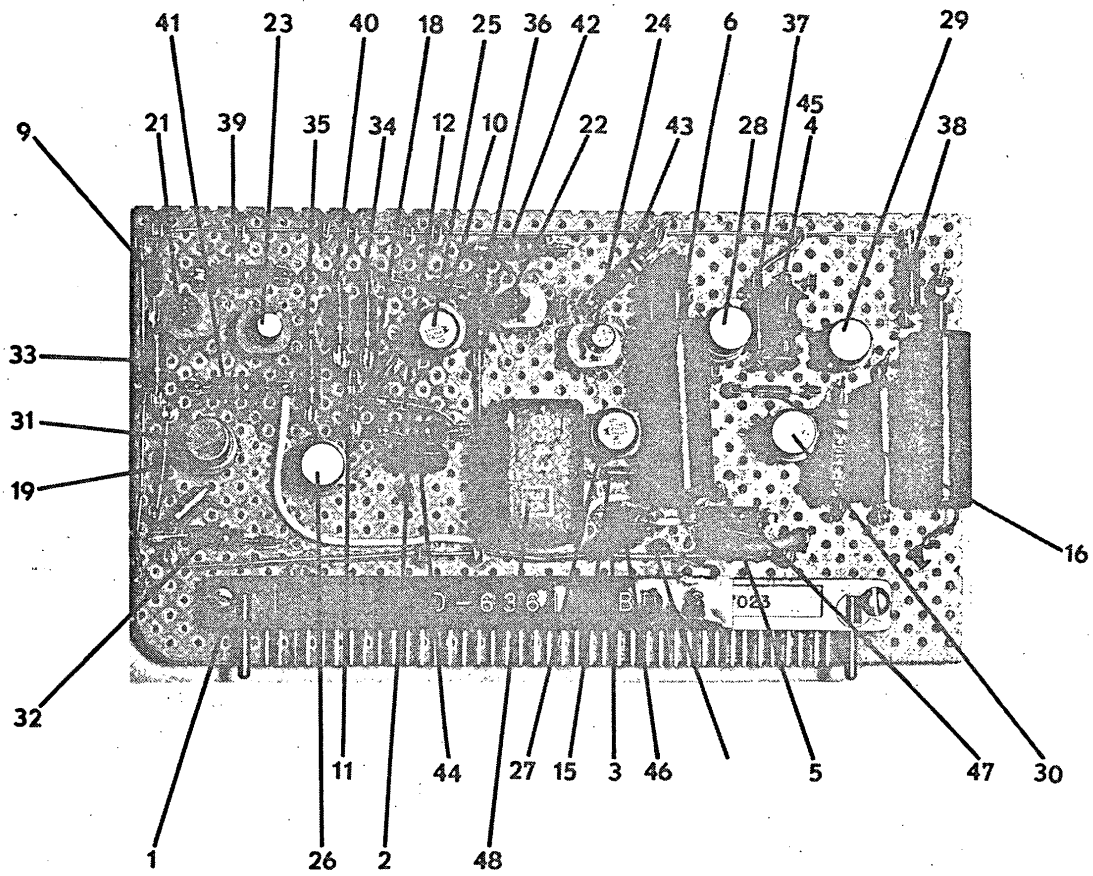

Figure 8-44. Component Board No. Six (6)
(SEE frame separation detector wiring diagram)

Approved For Release 2005/02/17 : CIA-RDP78B04770A001600030001-2

Approved For Release 2005/02/17 : CIA-RDP78B04770A001600030001-2

FIG. & INDEX NO.	PART NUMBER	DESCRIPTION 1 2 3 4 5 6 7	UNITS PER ASSY	USABLE ON CODE
8-44	D6361	COMPONENT BOARD NO. 6	1	
-1	7023	. CONNECTOR (ELCO)	1	
	20PF	. CAPACITOR (Designated as below)	4	
-2		. . C4		
-3		. . C5		
-4		. . C8		
-5		. . C9		
-6	10 mfd	. CAPACITOR, 20 Volts, C6	1	
-7	15 mfd	. CAPACITOR, C10	1	
-8	1 mfd	. CAPACITOR, C18	1	
	1N750	. DIODE (Designated as below)	2	
-9		. . CR40		
-10		. . CR46		
	1N914	. DIODE (Designated as below)	6	
-11		. . CR41		
-12		. . CR43		
-13		. . CR44		
-14		. . CR47		
-15		. . CR49		
-16		. . CR50		
	1N756	. DIODE (Designated as below)	2	
-17		. . CR48		
-18		. . CR42		
-19	1N55	. DIODE, CR45	1	
-20	1N459	. DIODE, CR75	1	
	2N3702	. TRANSISTOR (Designated as below)	2	
-21		. . Q44		
-22		. . Q50		
	2N930	. TRANSISTOR (Designated as below)	2	
-23		. . Q45		
-24		. . Q51		
	2N2219	. TRANSISTOR (Designated as below)	6	
-25		. . Q46		
-26		. . Q47		
-27		. . Q48		
-28		. . Q52		
-29		. . Q53		
-30		. . Q54		
-31	2N2905	. TRANSISTOR, Q49	1	
-32	510 ohm	. RESISTOR, 1/2 Watt, 5% Tolerance, R77	1	
	2.2K	. RESISTOR, 1/2 Watt, 5% Tolerance (Designated as below)	6	
-33		. . R69		
-34		. . R72		
-35		. . R73		
-36		. . R78		
-37		. . R81		
-38		. . R82		
	10K	. RESISTOR, 1/2 Watt, 5% Tolerance (Designated as below)	5	
-39		. . R70		
-40		. . R71		
-41		. . R76		
-42		. . R79		
-43		. . R80		
	33K	. RESISTOR, 1/2 Watt, 5% Tolerance (Designated as below)	2	
-44		. . R74		
-45		. . R83		
	56K	. RESISTOR, 1/2 Watt, 5% Tolerance (Designated as below)	2	
-46		. . R75		
-47		. . R84		
-48	35AH5005	. RELAY, K14 (General Electric)	1	

Approved For Release 2005/02/17 : CIA-RDP78B04770A001600030001-2

Approved For Release 2005/02/17 : CIA-RDP78B04770A001600030001-2

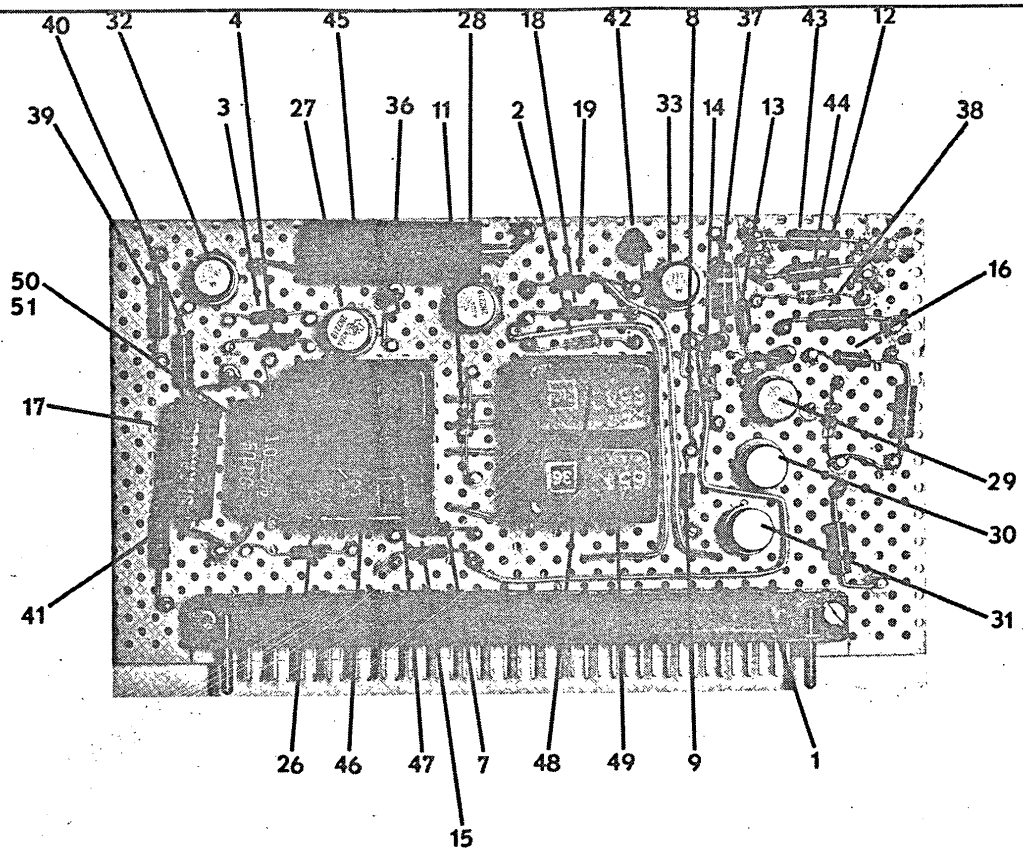

Figure 8-45. Component Board No. Seven (7)
(SEE frame separation detector wiring diagram)

Approved For Release 2005/02/17 : CIA-RDP78B04770A001600030001-2

Approved For Release 2005/02/17 : CIA-RDP78B04770A001600030001-2

FIG. & INDEX NO.	PART NUMBER	DESCRIPTION 1 2 3 4 5 6 7	UNITS PER ASSY	USABLE ON CODE
8-45	D6362	COMPONENT BOARD NO. 7	1	
-1	7023	. CONNECTOR (ELCO)	1	
	1N914	. DIODE (Designated as below)	15	
-2		. . CR51		
-3		. . CR52		
-4		. . CR53		
-5		. . CR61		
-6		. . CR62		
-7		. . CR63		
-8		. . CR64		
-9		. . CR65		
-10		. . CR67		
-11		. . CR70		
-12		. . CR71		
-13		. . CR72		
-14		. . CR93		
-15		. . CR94		
-16		. . CR95		
	1N751	. DIODE (Designated as below)	2	
-17		. . CR54		
-18		. . CR55		
-19	1N757	. DIODE, CR56	1	
	1N459	. DIODE (Designated as below)	7	
-20		. . CR66		
-21		. . CR73		
-22		. . CR78		
-23		. . CR79		
-24		. . CR80		
-25		. . CR81		
-26		. . CR82		
	2N2219	. TRANSISTOR (Designated as below)	5	
-27		. . Q55		
-28		. . Q56		
-29		. . Q65		
-30		. . Q61		
-31		. . Q62		
	2N2905	. TRANSISTOR (Designated as below)	2	
-32		. . Q57		
-33		. . Q58		
	2.2K	. RESISTOR, 1/2 Watt, 5% Tolerance (Designated as below).	2	
-34		. . R92		
-35		. . R96		
-36	2.7K	. RESISTOR, 1/2 Watt, 5% Tolerance, R88	1	
	3.9K	. RESISTOR, 1/2 Watt, 5% Tolerance (Designated as below).	2	
-37		. . R106		
-38		. . R107		
-39	10K	. RESISTOR, 1/2 Watt, 5% Tolerance, R86	1	
-40	12K	. RESISTOR, 1/2 Watt, 5% Tolerance, R87	1	
	22K	. RESISTOR, 1/2 Watt, 5% Tolerance (Designated as below).	4	
-41		. . R85		
-42		. . R90		
-43		. . R91		
-44		. . R108		
-45	.5 mfd	. CAPACITOR, 50 Volt, C12	1	
	35AH5005	. RELAY, General Electric (Designated as below)	4	
-46		. . K1		
-47		. . K2		
-48		. . K7		
-49		. . K8		
	1 mfd	. CAPACITOR, 50 Volts (Designated as below)	2	
-50		. . C19		
-51		. . C20		

Approved For Release 2005/02/17 : CIA-RDP78B04770A001600030001-2

Approved For Release 2005/02/17 : CIA-RDP78B04770A001600030001-2

Parts List

Auxiliary Punching Station

Part No. F 5995

STAT

1 June 1966

Approved For Release 2005/02/17 : CIA-RDP78B04770A001600030001-2

Approved For Release 2005/02/17 : CIA-RDP78B04770A001600030001-2

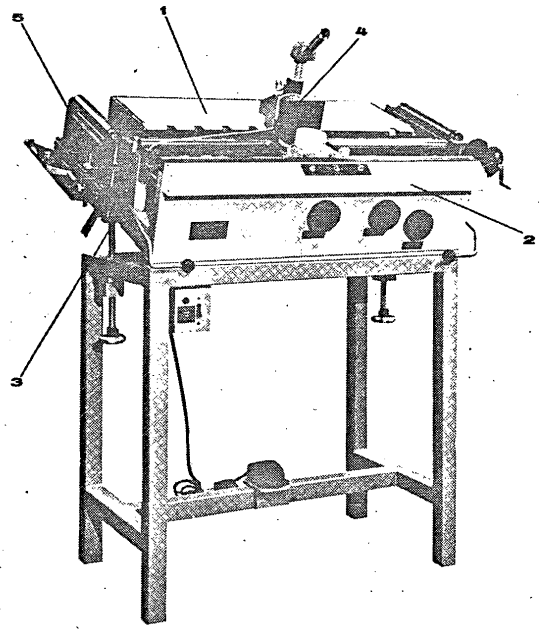

1 Viewing Pan

2 Frame Assembly

3 Frame

4 Carriage-Macroscope

5 Carriage-Viewing Pan

Figure 1. Punching Station

Approved For Release 2005/02/17 : CIA-RDP78B04770A001600030001-2

Approved For Release 2005/02/17 : CIA-RDP78B04770A001600030001-2

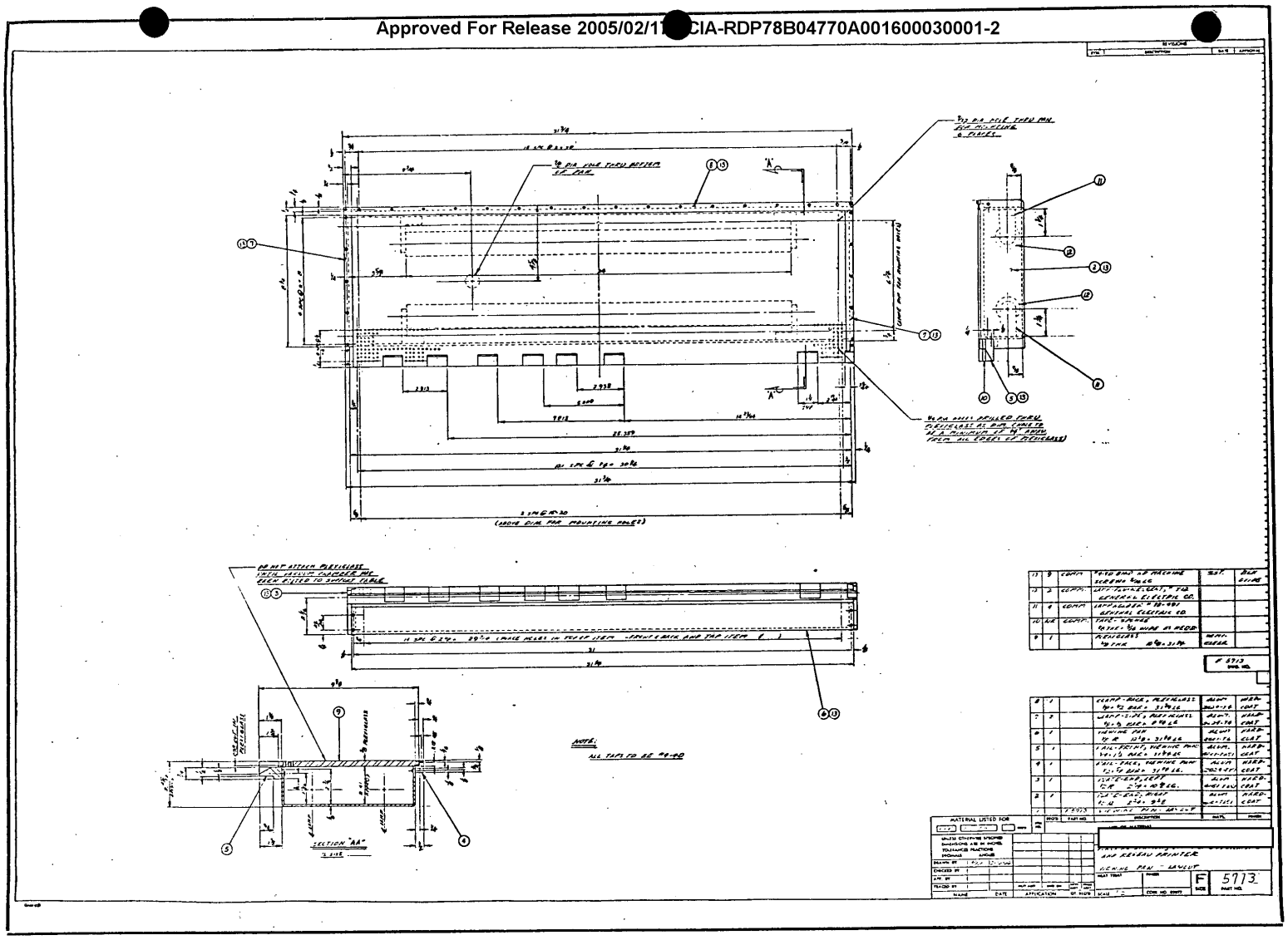

Figure 2. Viewing Pan

Approved For Release 2005/02/17 : CIA-RDP78B04770A001600030001-2

STAT

Parts List
Launching Station

Approved For Release 2005/02/17 : CIA-RDP78B04770A001600030001-2

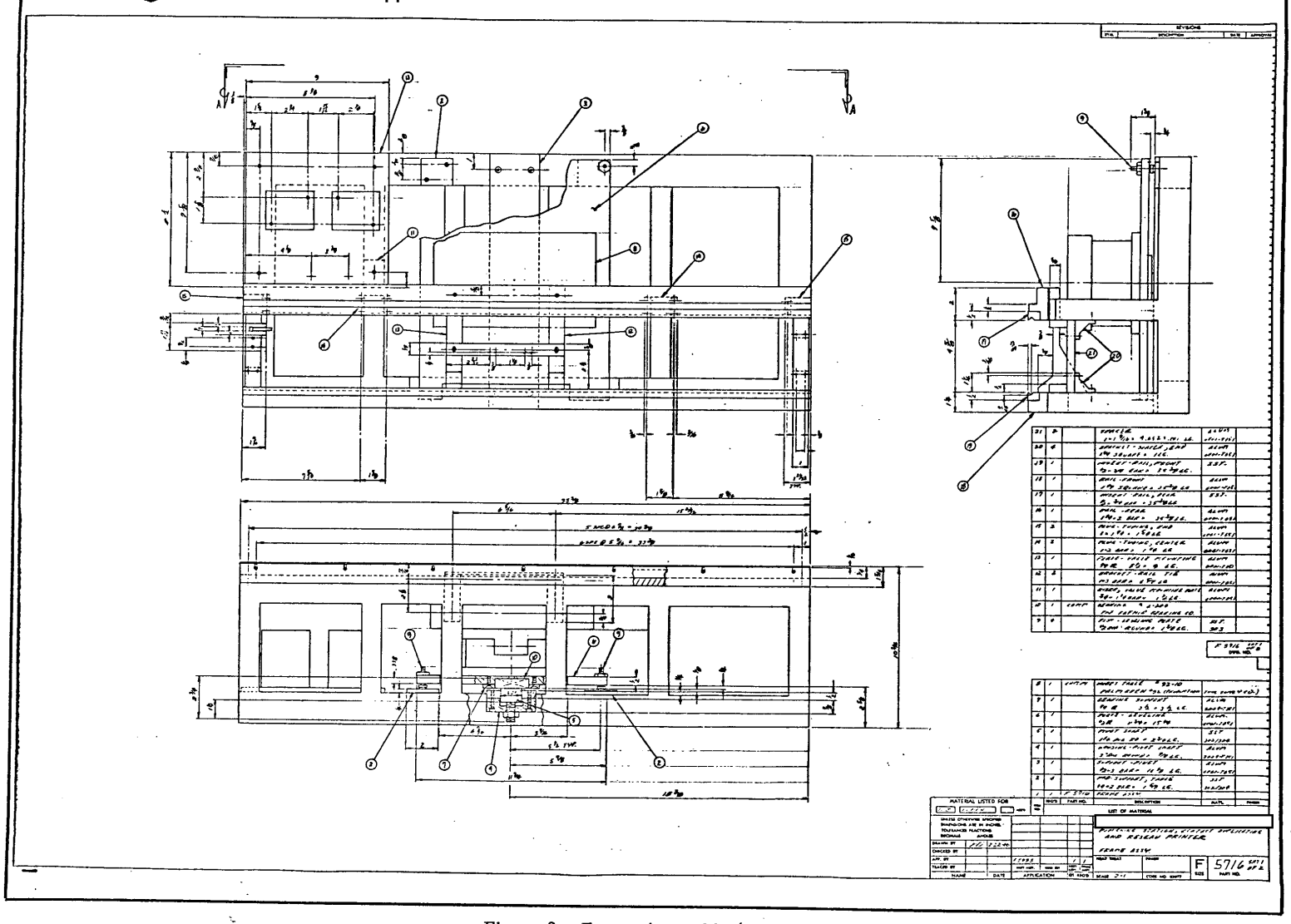

Figure 3. 2005/02/17 : CIA-RDP78B04770A001600030001-2

STAT

Parts List
Punching Station

Approved For Release 2005/02/17 : CIA-RDP78B04770A001600030001-2

Approved For Release 2005/02/17 : CIA-RDP78B04770A001600030001-2

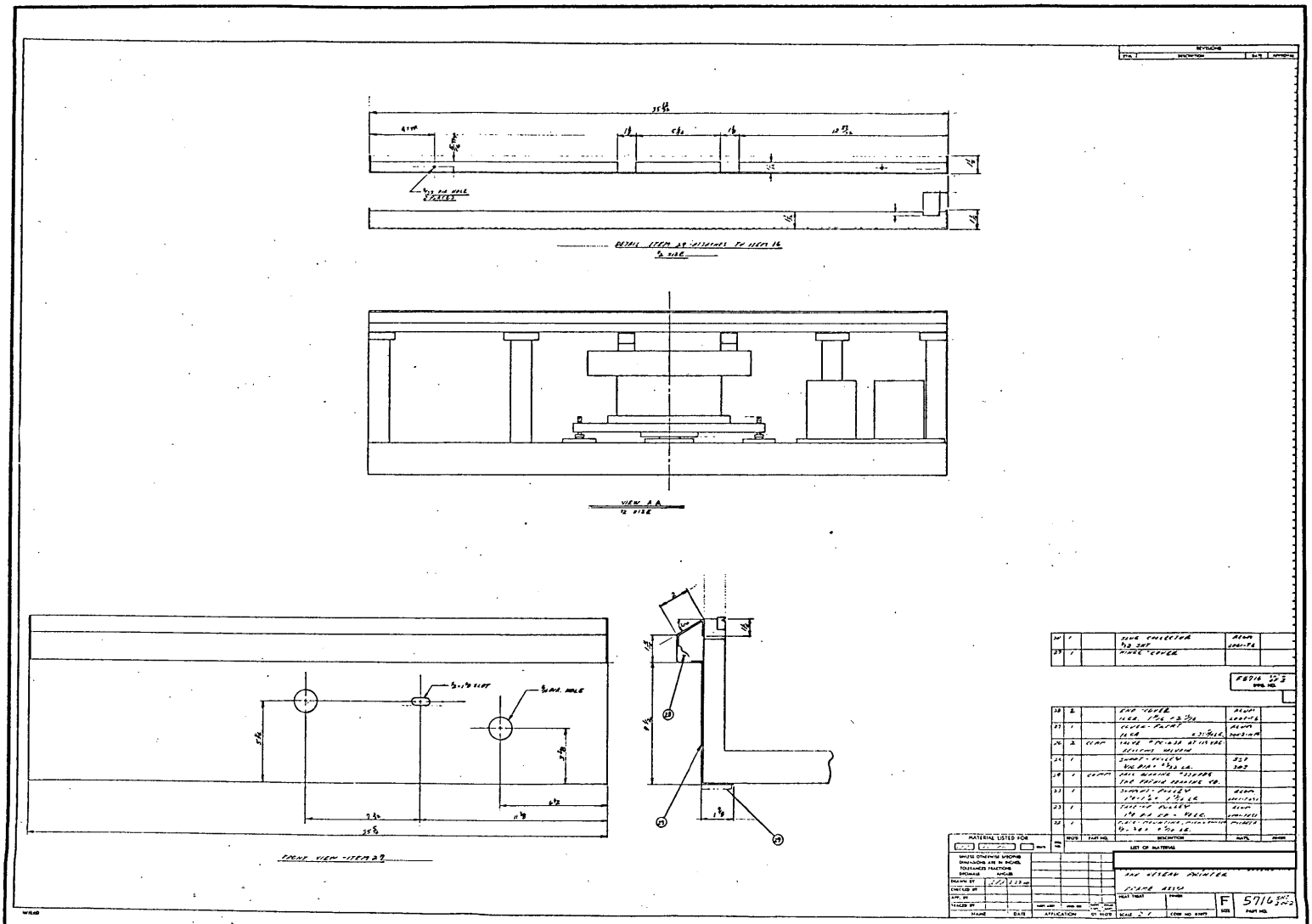

Approved For Release 2005/02/17 : CIA-RDP78B04770A001600030001-2

Figure 4. Frame Assembly (Sht. 2 of 2)

SPAT

Parts List
Punching Station

Approved For Release 2005/02/17 : CIA-RDP78B04770A001600030001-2

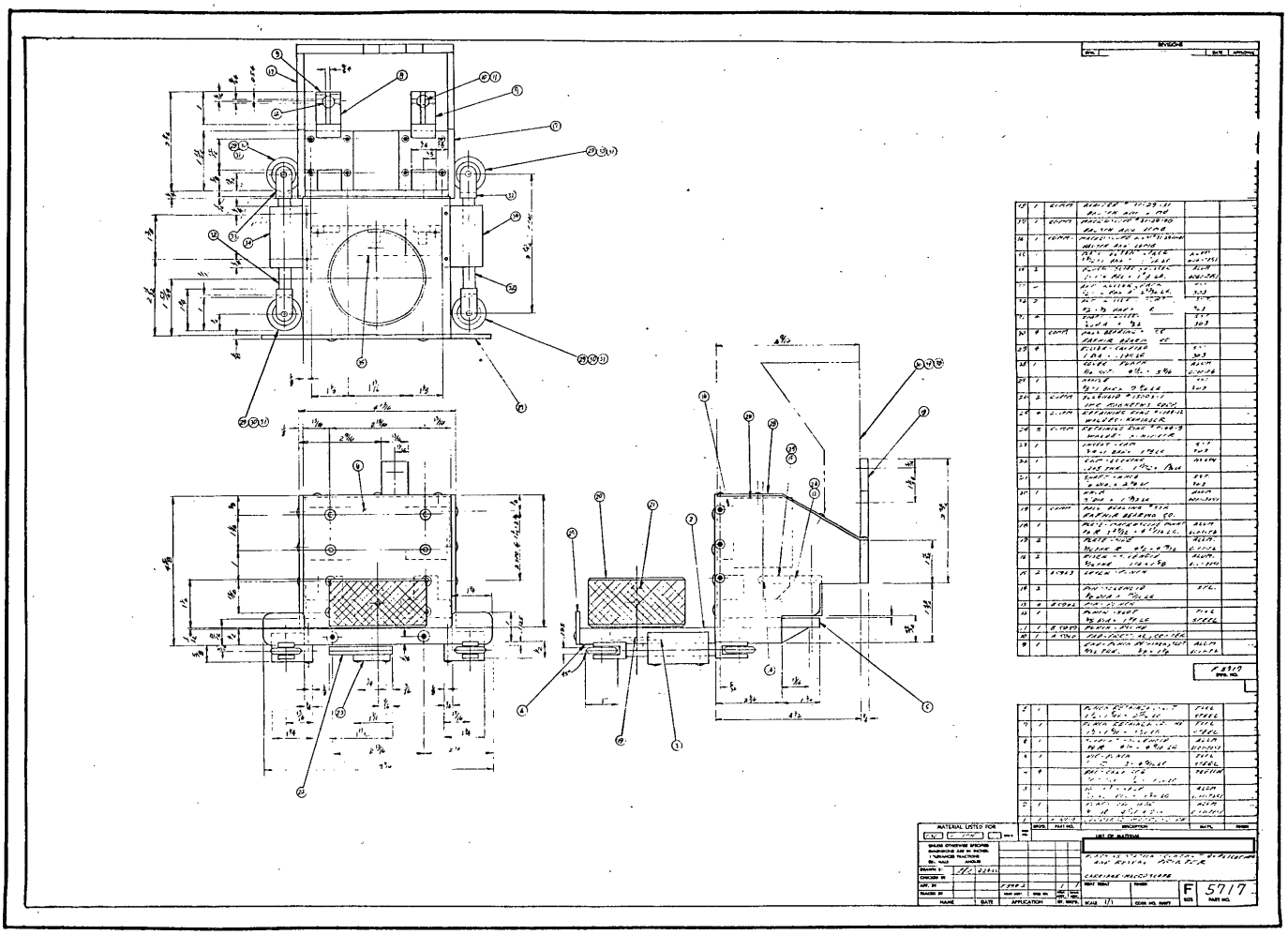

Figure 5. Carriage-Macroscope

Approved For Release 2005/02/17 : CIA-RDP78B04770A001600030001-2

STAT

Parts List
Punching Station

Approved For Release 2005/02/17 : CIA-RDP78B04770A001600030001-2

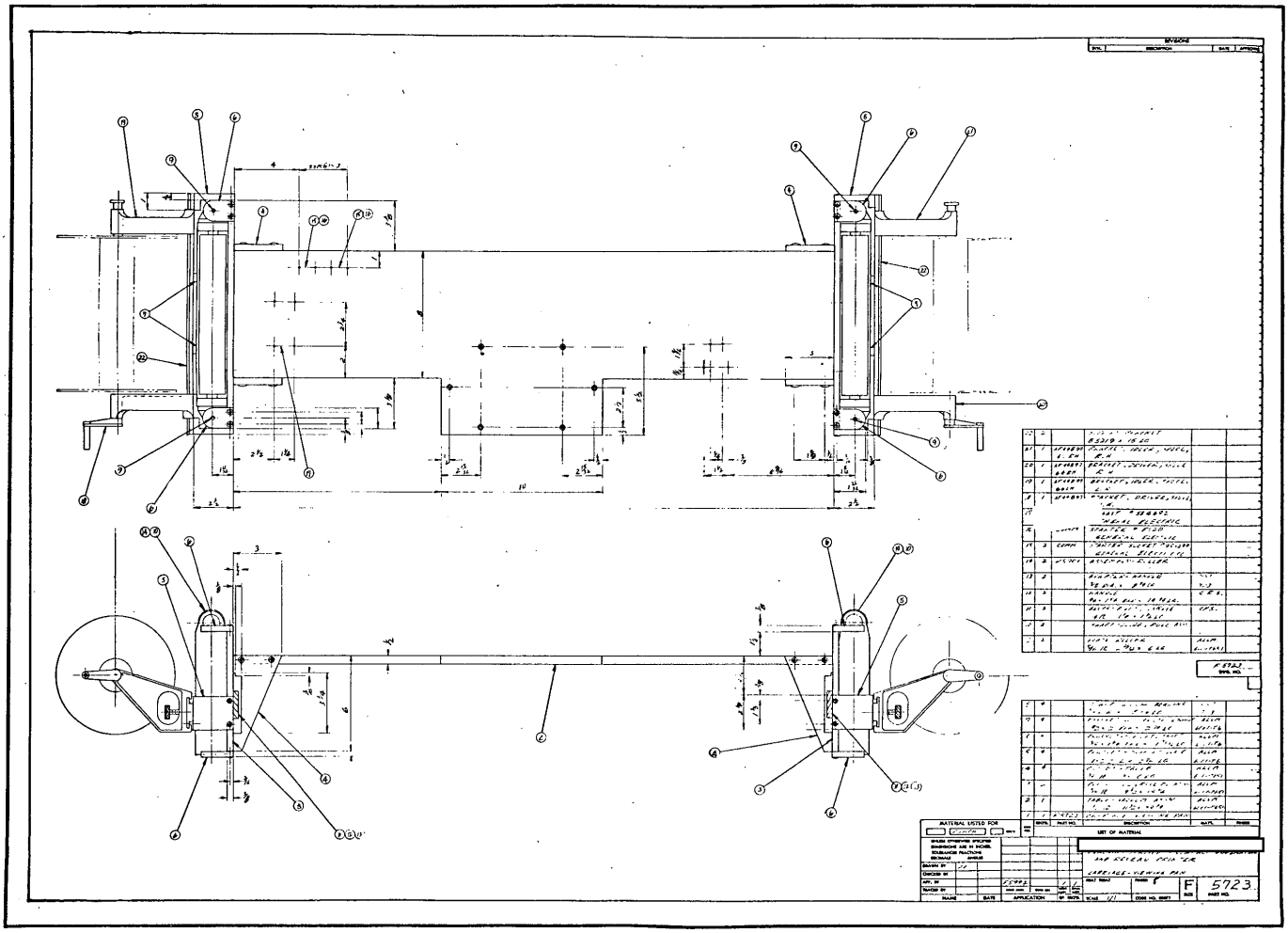

Figure 6. Carriage-Viewing Pan

Approved For Release 2005/02/17 : CIA-RDP78B04770A001600030001-2

STAT

Parts List
Punching Station

Approved For Release 2005/02/17 : CIA-RDP78B04770A001600030001-2

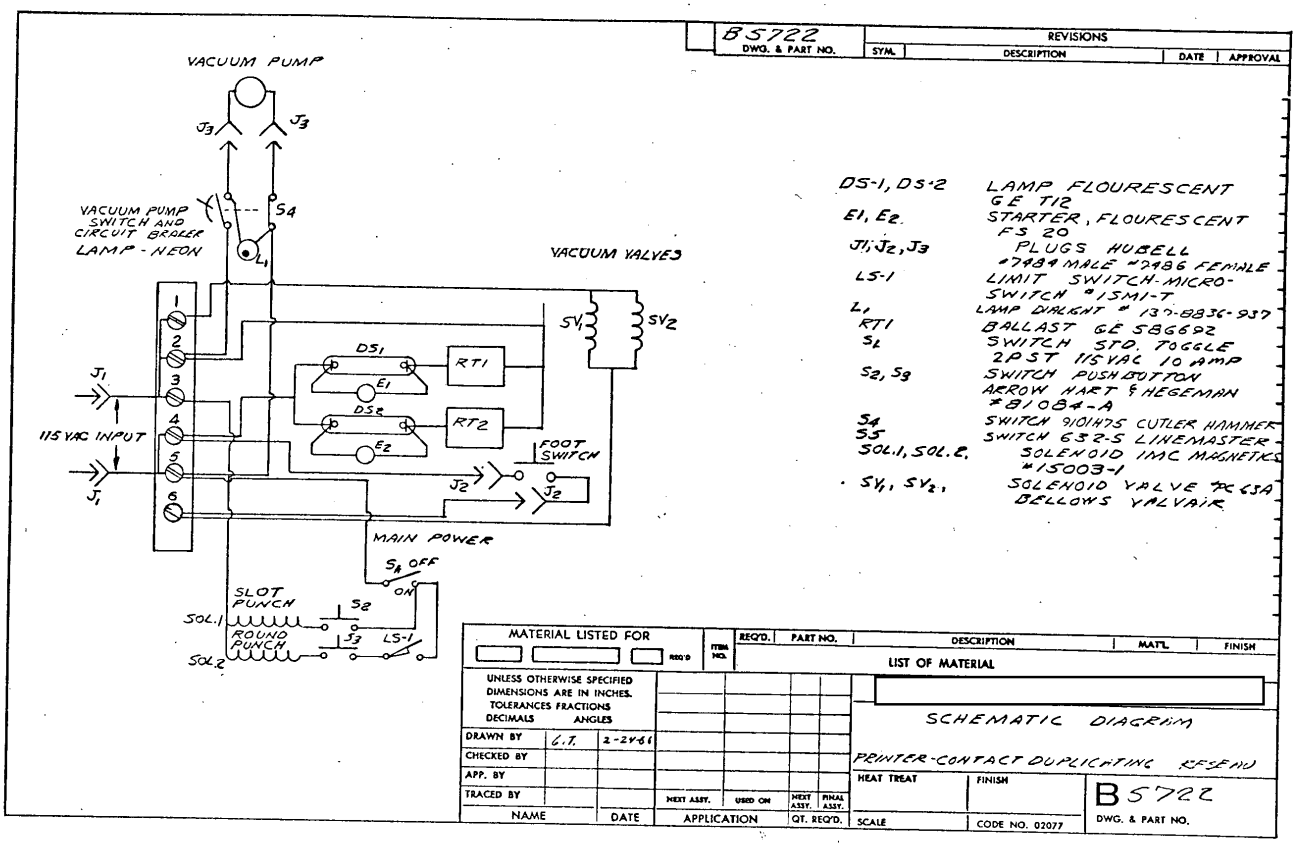

Approved For Release 2005/02/17 : CIA-RDP78B04770A001600030001-2

Figure 7. Wiring Diagram

Approved For Release 2005/02/17 : CIA-RDP78B04770A001600030001-2

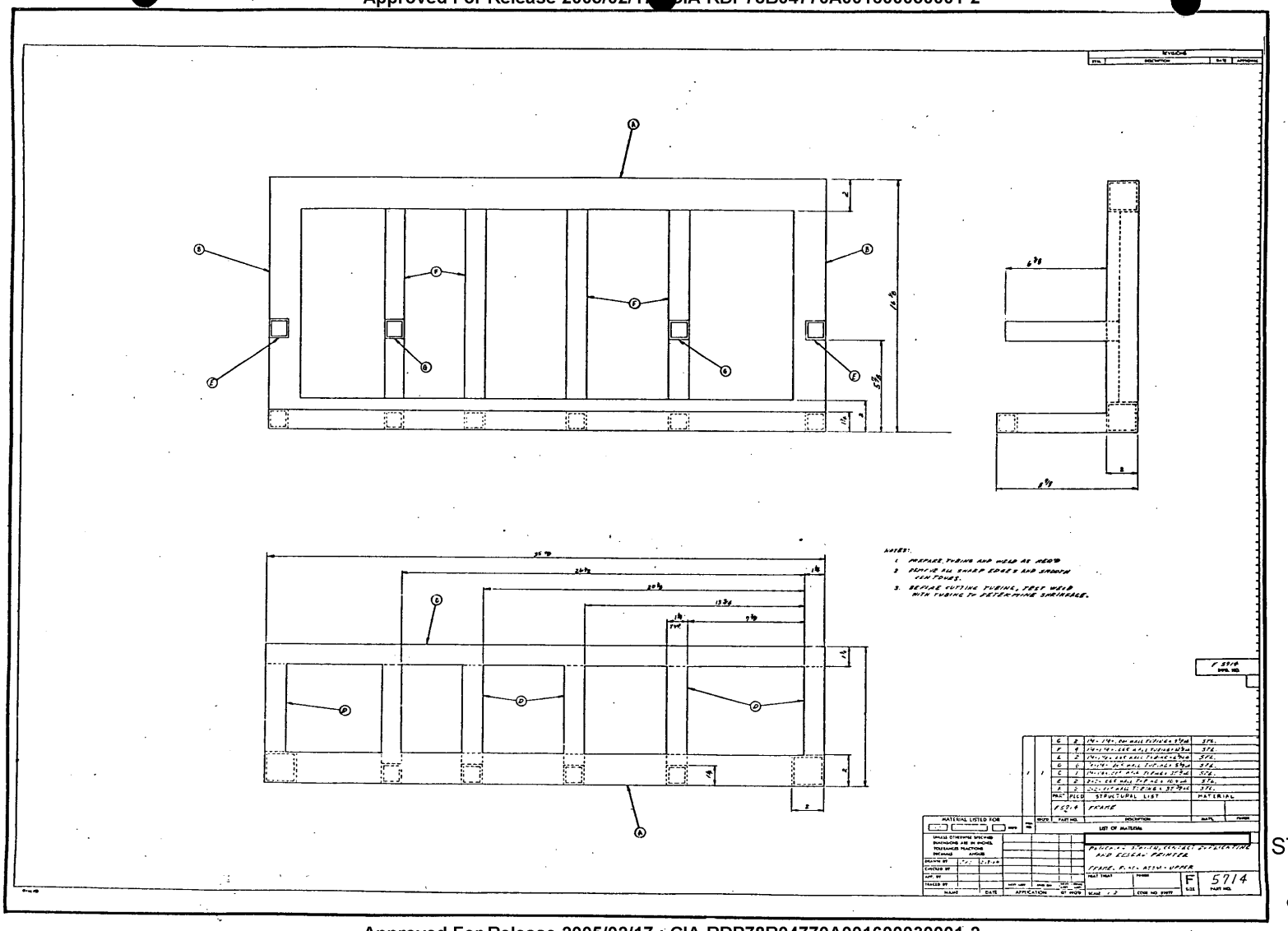

Approved For Release 2005/02/17 : CIA-RDP78B04770A001600030001-2

Figure 8. Frame

STAT

Parts List
Punching Station