Sanitized Copy Approved for Release 2011/07/06 : CIA-RDP80-00809A000600250680-9

CLASSIFICATION CONFIDENTIAL CONFIDENTIAL

CENTRAL INTELLIGENCE AGENCY
INFORMATION FROM
FOREIGN DOCUMENTS OR RADIO BROADCASTS

REPORT

CD NO.

50X1-HUM

COUNTRY	USSR	DATE OF INFORMATION	1947
SUBJECT	Electronics - Relays		
HOW PUBLISHED	Bimonthly periodical	DATE DIST.	27 Sep 1949
WHERE PUBLISHED	Moscow	NO. OF PAGES	20
DATE PUBLISHED	Mar/Apr 1947		
LANGUAGE	Russian	SUPPLEMENT TO REPORT NO.	

THIS DOCUMENT CONTAINS INFORMATION AFFECTING THE NATIONAL DEFENSE OF THE UNITED STATES WITHIN THE MEANING OF ESPIONAGE ACT 50 U. S. C., 31 AND 32, AS AMENDED. ITS TRANSMISSION OR THE REVELATION OF ITS CONTENTS IN ANY MANNER TO AN UNAUTHORIZED PERSON IS PROHIBITED BY LAW. REPRODUCTION OF THIS FORM IS PROHIBITED.

THIS IS UNEVALUATED INFORMATION

SOURCE Avtomatika i Telemekhanika, Vol VIII, No 2, 1947. (FDB Per Abs No 71T8 -- Information requested.)

A GENERAL METHOD OF TRANSFORMING CONTACT RELAY SYSTEMS

M. A. Gavrilov
Inst of Automatics and Telemech
Acad Sci USSR

/Figures are appended./

Present mathematics for synthesizing and analyzing contact relay systems is applied only to the multiple series type (Class P systems). In this article a more general method will be examined through modifying one extremely general system by short circuiting or disconnecting various elements of it. This method permits transforming any systems where individual members connected in series or in parallel can be isolated.

Problem of General Transformation of Contact Relay Systems

As we know, mathematical logic /1,2,3/ can be applied for the transformation of contact relay systems. But application of mathematics in its pure form is possible only for those systems, in which individual elements are connected only in series or in parallel (multiple series systems, or Class P systems). However, in the technique of contact relay systems use is often made also of systems in which individual elements are connected in the form of a bridge (nonparallel-series systems or Class N systems). These systems are more economical in the number of elements needed as a minimum to fulfill given conditions. They cannot be described analytically by means of algebraic symbolism. Symbolic relations used for transformation of Class P systems are not applicable to Class N systems, and therefore some general methods must be found which will permit transforming systems regardless of their class.

This article studies one such method, applicable to systems in which it is possible to isolate individual members which can themselves represent both Class P and Class N systems (of a planar or nonplanar type, i.e., with intersecting lines), but which are connected in parallel or in series. (In transforming systems in which it is not possible to isolate members connected in parallel or in series, i.e., for systems with bridge connections only, it is necessary to use special symbolism.) In this case, as will be shown later, a

CLASSIFICATION CONFIDENTIAL CONFIDENTIAL

STATE	X	NAVY	X	NSRB	DISTRIBUTION					
ARMY	X	AIR	X	FBI						

Sanitized Copy Approved for Release 2011/07/06 : CIA-RDP80-00809A000600250680-9

Sanitized Copy Approved for Release 2011/07/06 : CIA-RDP80-00809A000600250680-9

50X1-HUM

complete analytical record of the systems need not be resorted to, but the individual members may be expressed as general symbols which can be operated on without revealing their value.

To carry on transformation operations not with individual elements of systems but with whole sections of them, it is necessary to find those symbols characterizing the systems or individual parts of them which permit, on the one hand, establishing the relationship of these systems and, on the other, determining those relations between the symbols which permit equivalent transformations of the structural formulas for systems made up of these symbols. Such general relations can be found because any two or more parts of one system, and also two or more of different systems, can be derived from a certain comprehensive system containing all possible elements in which individual elements are short circuited or disconnected to represent the derivative systems.

For example, if we take the two systems represented in Figure 1, a and b, absolutely different in outward appearance and in their operational conditions, these systems may be represented as derivatives of the system in Figure 1c, in which element h in the first case is connected (shorted) and in the second is disconnected.

This possibility of representing any system as a derivative of one system with differently connected or disconnected elements permits determining relationships between systems and establishing equivalences for transforming them. To this end, obviously, it is necessary only to analyze the relations obtaining in differently connected and disconnected systems.

Analytic Formulas

First let us introduce certain symbols. We denote the initial system from which all others are obtained by the symbol F; any element, or elements, between points k and k_a is represented by the symbol x_k; the short circuit between points k and k_a is represented by the index k written with its respective symbol; and the disconnected circuit between points k and k_a is simply represented by the index k.

If, for example, in connection with this symbolism we denote the system in Figure 1c by F and the points between which element h is connected are represented by k and k_a then the systems in Figure 1, a and b, will be written as $F_{\underline{k}}$ and F_k, respectively.

The analytic formulas for the constituents of unity and of zero [4,5] will be written in the above symbolism in the form:

$$F = F_{\underline{1,2,\ldots,n}} x_1 x_2 \ldots x_n + F_{1,\underline{2},\ldots,\underline{n}} \bar{x}_1 x_2 \ldots x_n + \\ + \ldots + F_{1,2,\ldots,\underline{n}} \bar{x}_1 \bar{x}_2 \ldots x_n + \ldots + F_{1,2,\ldots,n} \bar{x}_1 \bar{x}_2 \ldots \bar{x}_n. \quad (1)$$

$$F = (F_{1,2,\ldots,n} + x_1 + x_2 + \ldots + x_n)(F_{\underline{1},2,\ldots,n} + \bar{x}_1 + x_2 + \\ + \ldots + x_n) \ldots (F_{1,2,\ldots,n} + \bar{x}_1 + \bar{x}_2 + \ldots + x_n) \ldots (F_{1,2,\ldots,\underline{n}} + \\ + \bar{x}_1 + \bar{x}_2 + \ldots + \bar{x}_n). \quad (1a)$$

Sanitized Copy Approved for Release 2011/07/06 : CIA-RDP80-00809A000600250680-9

Sanitized Copy Approved for Release 2011/07/06 : CIA-RDP80-00809A000600250680-9

50X1-HUM

We shall observe that $x_1, x_2, \ldots, x_k$ as designated above have some significance other than that in the usual structural formulas. In the latter these symbols denote the contacts, and reactive organs of any element which can be included in different places in the system and which are found in it once or several times. In equivalences (1) and (1a) $x_1, x_2, \ldots, x_n$ are themselves contacts and reactive organs of elements, connected only at determined points of the system, namely, between points 1 -- 1_a, 2 -- 2_a, ..., n -- n_a, i.e., each of them can be met in the system only once.

Hence, if in the system under transformation there are recurrent contacts or reactive organs, when the system is represented by symbolism for differently connected and disconnected systems, they should be denoted by different indexes, in spite of belonging to the same element.

In transforming differently connected and disconnected systems, it is advisable in some cases to employ expressions differing somewhat from (1) and (1a) and to analyze structural formulas not by separate constituents but by groups of them which form circuits in series or in parallel in relation to selected elements of the system. Application of these formulas permits simplifying the demonstration of equivalences for differently connected or disconnected systems and making them more graphic.

We shall examine these formulas.

Let us analyze the structural formula of a certain system $F = f(x_1, x_2, \ldots x_k, \ldots, x_n)$ for constituents of unity, and group those which characterize part of a system not containing the elements $x_1, x_2, \ldots, x_k$.

Then the remaining constituents will represent circuits passing through $x_1, x_2, \ldots, x_k$. Denoting the latter respectively through $f\,\boxed{1}$, $f\,\boxed{2}$, ..., $f\,\boxed{k}$, we shall have

$$F = F_{1,2,\ldots,k} + f\,\boxed{1} + f\,\boxed{2} + \ldots + f\,\boxed{k}.$$

If there is any system $F_{1,2,\ldots,k}$ and from it circuits are isolated which pass through the elements x_m and x_n, by analogy we can write:

$$F_{1,2,\ldots,k} = F_{1,2,\ldots,k,m,n} + f[m]_{1,2,\ldots,k} + f[n]_{1,2,\ldots,k}. \qquad (2)$$

Since all circuits in $f[m]$ and $f[n]$ pass through x_m and x_n, respectively,

$$f[m]_{1,2,\ldots,k} = f[m]_{1,2,\ldots,k,m}\, x_m$$
$$f[n]_{1,2,\ldots,k} = f[n]_{1,2,\ldots,k,n}\, x_n$$

Thus (Figure 2):

$$F_{1,2,\ldots,k} = F_{1,2,\ldots,k,m,n} + f[m]_{1,2,\ldots,k,m}\, x_m + f[n]_{1,2,\ldots,k,n}\, x_n. \qquad (2a)$$

By making use of equivalence (2), it is also possible to write (Figure 3, a, b, c, and d):

$$F_{1,2,\ldots,k} = F_{1,2,\ldots,k} + f[1]_{1,2,\ldots,k} = F_{1,2,\ldots,k} + f[1]_{1,2,\ldots,k} + f[2]_{1,2,\ldots,k} = F_{1,2,\ldots,k} + f[1]_{1,2,\ldots,k} + f[2]_{1,2,\ldots,k} + \ldots + f[k]_{1,2,\ldots,k}.$$

Sanitized Copy Approved for Release 2011/07/06 : CIA-RDP80-00809A000600250680-9

Sanitized Copy Approved for Release 2011/07/06 : CIA-RDP80-00809A000600250680-9

50X1-HUM

However, as $f(1)1,2,\ldots,k$ contains circuits passing through element x_1, i.e.,

$$f[1]1,2,\ldots,k = f[1]1,2,\ldots,k + f[1,2]1,2,\ldots,k,$$

and since, for the same reason,

$$f[2]1,2,\ldots,k = f[2]1,2,\ldots,k + f[1,2]1,2,\ldots,k,$$

and, moreover [3]:

$$f[1,2]1,2,\ldots,k = f[1,2]1,2,\ldots,k + f[1,2]1,2,\ldots,k,$$

therefore

$$\begin{aligned} f[1]1,2,\ldots,k + f[2]1,2,\ldots,k &= f[1]1,2,\ldots,k + f[1,2]1,2,\ldots,k + \\ &+ f[1,2]1,2\ldots,k + f[2]1,2,\ldots,k = \\ &= f[1]1,2,\ldots,k + f[2]1,2,\ldots,k \end{aligned} \tag{3}$$

Carrying out the same operation in relation to other members, we shall obtain (Figure 3d): $F1,2,\ldots,k = F1,2,\ldots,k + f[1]1,2,\ldots,k + f[2]1,2,\ldots,k + \cdots + f[k]1,2,\ldots,k$. (3a)

Taking the negative of expressions (2), (2a), (3), and (3a), we shall have:

$$\bar{F}1,2,\ldots,k = \bar{F}1,2,\ldots,k,m,n\,\overline{f[m]}1,2,\ldots,k\,\overline{f[n]}1,2,\ldots,k \tag{2'}$$

$$\bar{F}1,2,\ldots,k = \bar{F}1,2,\ldots,k,m,n(\overline{f[m]}1,2,\ldots,k,m + \bar{x}_m)\times$$
$$\times(\overline{f[n]}1,2\ldots,k,n + \bar{x}_n). \tag{2'a}$$

$$\bar{F}1,2,\ldots,k = \bar{F}1,2,\ldots,k\,\overline{f[1]}1,2,\ldots,k\,\overline{f[2]}1,2,\ldots,k\times$$
$$\times\ldots\overline{f[k]}1,2,\ldots,k. \tag{3'}$$

$$\bar{F}1,2,\ldots,k = \bar{F}1,2\ldots,k\,\overline{f[1]}1,2,\ldots,k\,\overline{f[2]}1,2,\ldots,k,\times \tag{3'a}$$
$$\times\ldots f[k]1,2,\ldots,k.$$

Analogous relations can also be obtained even in applying the resoltuion to the constituents of zero. In this case in the part of the system which does not contain elements x_1, x_2, ..., x_k, these elements must be short circuited, and the circuits containing them must be consistent with equivalence (1a) and connected with it in series. The remaining elements in each of these circuits must be connected in parallel to the element with reference to which the system resolution is being made.

Denoting these circuits, respectively by $f\{1\}$, $f\{2\}$..., $f\{k\}$ we obtain:

$$F = F1,2,\ldots,k\times$$
$$\times f\{1\}f\{2\}\ldots f\{k\}.$$

Given any system $F1,2,\ldots,k$ from which it is desired to isolate the circuits parallel to the elements x_n and x_m, we may write (Figure 4, a and b), in accordance with this:

$$F1,2,\ldots,k = F1,2,\ldots,k,m,n\,f\{m\}1,2,\ldots,k\,f\{n\}1,2,\ldots,k. \tag{4}$$

Since $f\{m\}$ and $f\{n\}$, as circuits connected in parallel, contain the elements x_m and x_n, we shall have by isolating them:

$$f\{m\}1,2,\ldots,k = f\{m\}1,2,\ldots,k,m + x_m$$

and

$$f\{n\}1,2\ldots,k = f\{n\}1,2,\ldots,k,n + x_n.$$

hence (Figure 4c):

$$F1,2,\ldots,k = F1,2,\ldots,k,m,n\,(f\{m\}1,2,\ldots,k,m + x_m)\times$$
$$\times(f\{n\}1,2,\ldots,k,n + x_n).$$

Sanitized Copy Approved for Release 2011/07/06 : CIA-RDP80-00809A000600250680-9

Sanitized Copy Approved for Release 2011/07/06 : CIA-RDP80-00809A000600250680-9

50X1-HUM

By using equivalences (4), [illegible] to write (Figure 5, a, b, c, and d):

$$F_{1,2,\ldots,k} = F_{\underline{1},2,\ldots,k} f\{1\}_{1,2,\ldots,k} = F_{\underline{1},\underline{2},\ldots,k} \times$$
$$\times f\{1\}_{1,2,\ldots,k} f\{2\}_{\underline{1},2,\ldots,k} = \qquad (5)$$
$$= F_{\underline{1},\underline{2},\ldots,\underline{k}} f\{1\}_{1,2,\ldots k} f\{2\}_{\underline{1},2,\ldots,k} \ldots f\{k\}_{\underline{1},\underline{2},\ldots,k}$$

As

$$f\{1\}_{1,2,\ldots,k} = f\{1\}_{1,\underline{2},\ldots k} f\{1,2\}_{1,2,\ldots,k}$$

and

$$f\{2\}_{1,2,\ldots,k} = f\{2\}_{\underline{1},2,\ldots,k} f\{1,2\}_{1,2,\ldots,k},$$

and, in addition, [3],

$$f\{1,2\}_{1,2,\ldots k} = f\{1,2\}_{1,2,\ldots,k} f\{1,2\}_{1,2,\ldots,k},$$

hence

$$f\{1\}_{1,2,\ldots,k} f\{2\}_{\underline{1},2,\ldots,k} = f\{1\}_{1,2,\ldots,k} f\{1,2\}_{1,2,\ldots,k} f\{1,2\}_{1,2\ldots k} \times$$
$$\times f\{2\}_{\underline{1},\underline{2},\ldots,k} = f\{1\}_{1,2,\ldots,k} f\{2\}_{1,(?),\ldots,k}.$$

Carrying on the same operation for other members of expression (5), we shall obtain (Figure 5e):

$$F_{1,2,\ldots,k} = F_{\underline{1},\underline{2},\ldots,\underline{k}} f\{1\}_{1,2,\ldots k} f\{2\}_{1,2,\ldots,k} \times$$
$$\times \ldots f\{k\}_{1,2,\ldots,k} \qquad (5a)$$

Taking the negative of expressions (4), (4a), (5), and (5a), we shall have:

$$\bar{F}_{\underline{1},\underline{2},\ldots,k} = \bar{F}_{\underline{1},\underline{2},\ldots,k,\underline{m},\underline{n}} + \overline{f\{m\}}_{\underline{1},\underline{2},\ldots,k} + \overline{f\{n\}}_{\underline{1},\underline{2},\ldots,k}, \qquad (4)$$

$$\bar{F}_{\underline{1},\underline{2},\ldots,k} = \bar{F}_{1,2,\ldots,k,\underline{m},\underline{n}} + \overline{f\{m\}}_{\underline{1},\underline{2},\ldots,k\,m} \bar{x}_m +$$
$$+ \overline{f\{n\}}_{\underline{1},\underline{2},\ldots,k,n} \bar{x}_n. \qquad (4'a)$$

$$\bar{F}_{1,2,\ldots,k} = \bar{F}_{\underline{1},\underline{2},\ldots,\underline{k}} + \overline{f\{1\}}_{1,2,\ldots,k} + \overline{f\{2\}}_{\underline{1},2,\ldots,k} +$$
$$+ \ldots + \overline{f\{k\}}_{\underline{1},\underline{2},\ldots,k}. \qquad (5')$$

$$\bar{F}_{1,2,\ldots,k} = \bar{F}_{\underline{1},\underline{2},\ldots,\underline{k}} + \overline{f\{1\}}_{1,2,\ldots,k} + \overline{f\{2\}}_{1,2,\ldots,k} + \qquad (5'a)$$
$$+ \ldots + \overline{f\{k\}}_{1,2,\ldots,k}$$

Let us note that equivalences (5) and (5a) can be obtained from equivalences (3) and (3a) or, vice versa, equivalences (3) and 3a) from equivalences (5) and (5a). It is possible to do this by transforming all signs and indexes to their opposites and changing the series circuits of the separate elements to circuits parallel to them, and vice versa. The same relation exists between equivalences (3') -- (3'a) and (5') -- (5'a).

Thus here, just as in Class P systems, there is a law of duality permitting transition to equivalences with opposite signs. However, it is expressed in a more complicated manner for differently connected and disconnected elements: aside from the change in structural formulas to the converse of the addition and multiplication signs, in this case it is necessary, as we showed above, to effect the same change to the converse of the indexes of the connections and breaks of circuits both in series and in parallel.

Basic Equivalences for Differently Connected and Disconnected Systems

Let us examine some equivalences for connections in parallel and in series for differently connected and disconnected systems:

A)

$$F + F_{1,2,\ldots k} = F. \qquad (6)$$
$$F \cdot F_{1,2,\ldots,k} = F_{1,2,\ldots,k}. \qquad (6a)$$

Sanitized Copy Approved for Release 2011/07/06 : CIA-RDP80-00809A000600250680-9

Sanitized Copy Approved for Release 2011/07/06 : CIA-RDP80-00809A000600250680-9

50X1-HUM

To demonstrate these equivalences, let us isolate from system F circuits paralleling through points $1-1_a$, $2-2_a$, ..., $k-k_a$. Then, making use of the well-known established relations $x+x=x$ and $x+xy=x$ [3], we shall obtain:

$$F+F_{1,2,\ldots,k}=F_{1,2,\ldots,k}+f[1]+f[2]+\cdots+f[k]+$$
$$+F_{1,2,\ldots,k}=F_{1,2,\ldots,k}+f[1]+f[2]+\cdots+f[k]=F,$$
$$F\cdot F_{1,2,\ldots,k}=(F_{1,2,\ldots,k}+f[1]+f[2]+\cdots+$$
$$+f[k])F_{1,2,\ldots,k}=F_{1,2,\ldots,k}.$$

Figure 6,a and b, gives a graphic representation of the transformation of systems corresponding to equivalences (6) and (6a). (Equivalences (6) and (6a) may also be demonstrated by resolving them into their constituents. In fact, if we break down systems F and $F_{1,2,\ldots,k}$ into their constituent units, the last one will be differentiated from the first only in that the constituents containing $x_1, x_2, \ldots, x_k$ will be lacking. Hence, in a parallel connection of these systems, the effect of the resultant system will be equivalent to system F since, by the addition of the constituents, those which are lacking in system $F_{1,2,\ldots,k}$ will be made up by the corresponding constituents of system F. In a series connection, the resultant system will be equivalent to system $F_{1,2,\ldots,k}$ since by multiplication of the constituents the excessive ones contained in system F will be absorbed. The proof adduced above, using analytical formulas for differently connected and disconnected systems, is, however, simpler and more graphic.)

Making use of equivalences (6) and (6a) and following the law of duality for differently connected systems, we can obtain analogous relations also for systems with short-circuited points.

In fact, on the basis of (6a), we shall obtain:

$$F+F_{\underline{1},\underline{2},\ldots,\underline{k}}=F_{\underline{1},\underline{2},\ldots,\underline{k}}, \tag{7}$$

and on the basis of (6) we shall have:

$$F\cdot F_{\underline{1},\underline{2},\ldots,\underline{k}}=F \tag{7a}$$

(Figure 7 and 7a). (It is possible to arrive at this relation because system F can be examined in relation to system $F_{1,2,\ldots,k}$ as one in which the circuits between points $1-1_a$, $2-2_a$, ...$k-k_a$ are disconnected and then connected through elements $x_1, x_2, \ldots, x_k$. Hence equivalences (7) and (7a) may be obtained from equivalences (6) and (6a) by substituting in the latter $F_{1,2,\ldots,k}$ for F, and F for $F_{\underline{1},\underline{2},\ldots,\underline{k}}$)

It must be shown that equivalences (6) and (7a) are true for any number of systems connected in parallel -- equivalence (6) -- or in series -- equivalence (7a). If their number contains only one which has no short-circuited or disconnected points, or points identical with all the remaining systems, the resultant system will be equivalent to this one system and can be replaced by it.

Such a change may be effected for equivalences (6a) and (7) only in the case where there is among the systems connected in series or in parallel only one in which all disconnected or connected points in the remaining systems are disconnected -- for equivalence (6a) -- or connected -- for equivalence (7). If this is not the case, the equivalent system is expressed in a more complicated manner, as will be shown below.

Sanitized Copy Approved for Release 2011/07/06 : CIA-RDP80-00809A000600250680-9

Sanitized Copy Approved for Release 2011/07/06 : CIA-RDP80-00809A000600250680-9

50X1-HUM

a)
$$F+F_{1,2,\ldots,k,k+1,\ldots,n}=F+f[1]_{1,2,\ldots,k,k+1,\ldots,n}+$$
$$+f[2]_{1,2,\ldots,k,k+1,\ldots,n}+f[k]_{1,2,\ldots,k,k+1,\ldots,n}. \quad (8)$$
$$F\cdot F_{1,2,\ldots,k,k+1,\ldots,n}=$$
$$=F\cdot f\{k+1\}_{1,2,\ldots,k,k+1,\ldots,n}\ldots f\{n\}_{1,2,\ldots,k,k+1,\ldots,n} \quad (8a)$$

(Figure 8,a and b)

For proof of equivalence (8), let us isolate from system $F_{1,2,\ldots,k,k+1,\ldots,n}$ circuits passing through short-circuited points in this system:

$$F+F_{1,2,\ldots,k,k+1,\ldots,n}=F+F_{1,2,\ldots,k,k+1,\ldots,n}+f[1]_{1,2,\ldots,k,k+1,\ldots,n}+$$
$$+f[2]_{1,2,\ldots,k,k+1,\ldots,n}+\ldots+f[k]_{1,2,\ldots,k,k+1,\ldots,n}.$$

Since, according to equivalence (6):

$$F+F_{1,2,\ldots,k,k+1,\ldots,n}=F,$$

it follows that

$$F+F_{1,2,\ldots,k,k+1,\ldots,n}=F+f[1]_{1,2,\ldots,k,k+1,\ldots,n}+$$
$$+f[2]_{1,2,\ldots,k,k+1,\ldots,n}+\ldots+f[k]_{1,2,\ldots,k,k+1,\ldots,n}.$$

In the series connection, isolating from system $F_{1,2,\ldots,k,k+1,\ldots,n}$ circuits parallel to the disconnected elements in it, and making use of equivalence (7a), we shall obtain: $F\cdot F_{1,2,\ldots,k,k+1,\ldots,n}=$

$$=F\cdot F_{1,2,\ldots,k,k+1,\ldots,n}f\{k+1\}_{1,2,\ldots,k,k+1,\ldots,n}\ldots$$
$$\ldots f\{n\}_{1,2,\ldots,k,k+1,\ldots,n}=F\cdot f\{k+1\}_{1,2,\ldots,k,k+1,\ldots,n}\ldots$$
$$\ldots f\{n\}_{1,2,\ldots,k,k+1,\ldots,n}.$$

But it would be possible to obtain this directly from equivalence (8) by transition to relations with converse signs and by a corresponding change in the indexes.

c)
$$F_{1,2,\ldots,k}+F_{1,2,\ldots,k}=F_{1,2,\ldots,k}, \quad (9)$$
$$F_{1,2,\ldots,k}\cdot F_{1,2,\ldots,k}=F_{1,2,\ldots,k}. \quad (9a)$$

Let us isolate from $F_{1,2,\ldots,k}$ circuits passing through points $1-1_a, 2-2_a, \ldots k-k_a$. We shall then have:

$$F_{1,2,\ldots,k}+F_{1,2,\ldots,k}=F_{1,2,\ldots,k}+f[1]_{1,2,\ldots,k}+$$
$$+f[2]_{1,2,\ldots,k}+\ldots+f[k]_{1,2,\ldots,k}+F_{1,2,\ldots,k}=F_{1,2,\ldots,k}.$$
$$F_{1,2,\ldots,k}\cdot F_{1,2,\ldots,k}=(F_{1,2,\ldots,k}+f[1]_{1,2,\ldots,k}+$$
$$+f[2]_{1,2,\ldots,k}+\ldots+f[k]_{1,2,\ldots,k})F_{1,2,\ldots,k}=F_{1,2,\ldots,k}.$$

These equivalences will be valid, obviously, not only for two, but for any number of systems connected in parallel or in series, with similar short-circuited or disconnected points.

D)
$$F_{1,2,\ldots,k}+F_{k+1,k+2,\ldots,n}=F_{k+1,k+2,\ldots,n}, \quad (10)$$
$$F_{1,2,\ldots,k}\cdot F_{k+1,k+2,\ldots,n}=F_{1,2,\ldots,k}. \quad (10a)$$

Let us isolate from system $F_{k+1,k+2,\ldots,n}$ circuits passing through points $1-1_a, 2-2_a, \ldots k-k_a$:

$$F_{1,2,\ldots k}+F_{k+1,k+2,\ldots,n}=F_{1,2,\ldots,k,k+1,k+2,\ldots,n}+$$
$$+f[1]_{k+1,k+2,\ldots,n}+f[2]_{k+1,k+2,\ldots,n}+$$
$$+\ldots+f[k]_{k+1,k+2,\ldots,n}.$$

Sanitized Copy Approved for Release 2011/07/06 : CIA-RDP80-00809A000600250680-9

Sanitized Copy Approved for Release 2011/07/06 : CIA-RDP80-00809A000600250680-9

50X1-HUM

As, in accordance with (7),

$$F_{1,2,\ldots,k}+F_{1,2,\ldots,k,k+1,k+2,\ldots,n}=F_{1,2,\ldots,k,\underline{k+1},\underline{k+2},\ldots,n},$$

it follows that

$$F_{1,2,\ldots,k}+F_{\underline{k+1},\underline{k+2},\ldots,\underline{n}}=F_{1,2,\ldots,k,k+1,k+2,\ldots,\underline{n}}+$$
$$+f[1]_{k+1,k+2,\ldots,\underline{n}}+f[2]_{k+1,k+2,\ldots,\underline{n}}+\ldots$$
$$\ldots+f[k]_{\underline{k+1},\underline{k+2},\ldots,\underline{n}}=F_{\underline{k+1},\underline{k+2},\ldots,\underline{n}}.$$

For the series connection:

$$F_{1,2,\ldots,k}F_{\underline{k+1},\underline{k+2},\ldots,\underline{n}}=F_{1,2,\ldots,k,\underline{k+1},\underline{k+2},\ldots,\underline{n}}\cdot f\{k+1\}_{1,2,\ldots,k}\times$$
$$\times f\{k+2\}_{1,2,\ldots,k}\ldots f[n]_{1,2,\ldots,k}F_{\underline{k+1},\underline{k+2},\ldots,\underline{n}}.$$

As, in accordance with (6a),

$$F_{1,2,\ldots,k,\underline{k+1},\underline{k+2},\ldots,n}F_{\underline{k+1},\underline{k+2},\ldots,\underline{n}}=F_{1,2,\ldots,k,\underline{k+1},\underline{k+2},\ldots,\underline{n}},$$

it follows that:

$$F_{1,2,\ldots,k}F_{k+1,k+2,\ldots,\underline{n}}=F_{1,2,\ldots,k,k+1,k+2,\ldots,\underline{n}}f\{k+1\}_{1,2,\ldots,n}\times$$
$$\times f\{k+2\}_{1,2,\ldots,n}\ldots f\{n\}_{1,2,\ldots,n}=F_{1,2,\ldots,k}.$$

E) $$F_{1,2,\ldots,k}+F_{k+1,k+2,\ldots,n}=F_{k+1,k+2,\ldots,n}+f[k+1]_{1,2,\ldots,k}+$$
$$+f[k+2]_{1,2,\ldots,k}+\ldots+f[n]_{1,2,\ldots,k}. \tag{11}$$

$$F_{1,2,\ldots,k}\cdot F_{k+1,k+2,\ldots,n}=F_{1,2,\ldots,n}f\{k+1\}_{k+1,k+2,\ldots,n}\times$$
$$\times f\{k+2\}_{k+1,k+2,\ldots,n}\ldots f\{n\}_{k+1,k+2,\ldots,n}. \tag{11a}$$

Let us isolate from system $F_{1,2,\ldots,k}$ circuits passing through points $(k+1)$ — $(k+1)_a$, $(k+2)$ — $(k+2)_a$, ..., N — N_a:

$$F_{1,2,\ldots,k}+F_{k+1,k+2,\ldots,n}=F_{1,2,\ldots,k,k+1,k+2,\ldots,n}+$$
$$+f[k+1]_{1,2,\ldots,k}+f[k+2]_{1,2,\ldots,k}+$$
$$+\ldots+f[n]_{1,2,\ldots,k}+F_{k+1,k+2,\ldots,n}$$

Since, in accordance with (6):

$$F_{1,2,\ldots,k,k+1,k+2,\ldots,n}+F_{k+1,k+2,\ldots,n}=F_{k+1,k+2,\ldots,n},$$

it follows that:

$$F_{1,2,\ldots,k}+F_{k+1,k+2,\ldots,n}=F_{k+1,k+2,\ldots,n}+f[k+1]_{1,2,\ldots,k}+$$
$$+f[k+2]_{1,2,\ldots,k}+\ldots+f[n]_{1,2,\ldots,k}.$$

In a similar manner it may be demonstrated that:

$$F_{1,2,\ldots,k}+F_{k+1,k+2,\ldots,n}=F_{1,2,\ldots,k}+f[1]_{k+1,k+2,\ldots,n}+$$
$$+f[2]_{k+1,k+2,\ldots,n}+\ldots+f[k]_{k+1,k+2,\ldots,n}.$$

For a series connection, by employing equivalence (10a), we shall obtain:

$$F_{1,2,\ldots,k}F_{k+1,k+2,\ldots,n}=F_{1,2,\ldots,k}F_{\underline{k+1},\underline{k+2},\ldots,\underline{n}}f\{k+1\}_{k+1,k+2,\ldots,n}\times$$
$$\times f\{k+2\}_{k+1,k+2,\ldots,n}\ldots f\{n\}_{k+1,k+2,\ldots,n}=$$
$$=F_{1,2,\ldots,k}f\{k+1\}_{k+1,k+2,\ldots,n}\times$$
$$\times f\{k+2\}_{k+1,k+2,\ldots,n}\ldots f\{n\}_{k+1,k+2,\ldots,n}.$$

Sanitized Copy Approved for Release 2011/07/06 : CIA-RDP80-00809A000600250680-9

Sanitized Copy Approved for Release 2011/07/06 : CIA-RDP80-00809A000600250680-9

50X1-HUM

It may be demonstrated by analogy that:

$$F_{1,2,\ldots,k}F_{k+1,k+2,\ldots,n}=F_{k+1,k+2,\ldots,n}f\{1\}_{1,2,\ldots,k}\times$$
$$\times f\{2\}_{1,2,\ldots,k}\cdots f\{k\}_{1,2,\ldots,k} \qquad (11\text{'a})$$

Changing to relations with converse signs, we shall obtain for differently connected systems:

$$F_{1,2,\ldots,k}+F_{k+1,k+2,\ldots,n}=F_{1,2,\ldots,k}+f[k+1]_{k+1,k+2,\ldots,n}+$$
$$+f[k+2]_{k+1,k+2,\ldots,n}+\cdots+f[n]_{k+1,k+2,\ldots,n}=$$
$$=F_{k+1,k+2,\ldots,n}+f[1]_{1,2,\ldots,k}+f[2]_{1,2,\ldots,k}+$$
$$+\cdots+f[k]_{1,2,\ldots,k} \qquad (12)$$

$$F_{1,2,\ldots,k}\cdot F_{k+1,k+2,\ldots,n}=F_{1,2,\ldots,k}f\{1\}_{k+1,k+2,\ldots,n}\times$$
$$\times f\{2\}_{k+1,k+2,\ldots,n}\cdots f\{k\}_{k+1,k+2,\ldots,n}=$$
$$=F_{k+1,k+2,\ldots,n}\times f\{k+1\}_{1,2,\ldots,k}\times$$
$$\times f\{k+2\}_{1,2,\ldots,k}\cdots f\{n\}_{1,2,\ldots,k} \qquad (12a)$$

F)

$$F_{1,2,\ldots,d,d+1,\ldots,k}+F_{k+1,\ldots,m,m+1,\ldots,p}=F_{1,2,\ldots,d,d+1,\ldots,k}+$$
$$+f[k+1]_{k+1,\ldots,m,m+1,\ldots,p}+\cdots+f[m]_{k+1,\ldots,m,m+1,\ldots,p}+$$
$$+f[1]_{k+1,\ldots,m,m+1,\ldots,p}+\cdots+f[k]_{k+1,\ldots,m,m+1,\ldots,p}=$$
$$=F_{k+1,\ldots,m,m+1,\ldots,p}+f[1]_{1,2,\ldots,d,d+1,\ldots,k}+$$
$$+\cdots+f[d]_{1,2,\ldots,d,d+1,\ldots,k}+f[k+1]_{1,2,\ldots,d,d+1,\ldots,k}+$$
$$+\cdots+f[p]_{1,2,\ldots,d,d+1,\ldots,k} \qquad (13)$$

$$F_{1,2,\ldots,d,d+1,\ldots,k}\cdot F_{k+1,\ldots,m,m+1,\ldots,p}=F_{1,2,\ldots,d,d+1,\ldots,k}\times$$
$$\times f\{m+1\}_{k+1,\ldots,m,m+1,\ldots,p}\cdots f\{p\}_{k+1,\ldots,m,m+1,\ldots,p}\times$$
$$\times f\{1\}_{k+1,\ldots,m,m+1,\ldots,p}\cdots f\{k\}_{k+1,\ldots,m,m+1,\ldots,p}=$$
$$=F_{k+1,\ldots,m,m+1,\ldots,p}f\{d+1\}_{1,2,\ldots,d,d+1,\ldots,k}\times$$
$$\times\cdots f\{k\}_{1,2,\ldots,d,d+1,\ldots,k}f\{k+1\}_{1,2,\ldots,d,d+1,\ldots,k}\times$$
$$\times\cdots f\{p\}_{1,2,\ldots,d,d+1,\ldots,k} \qquad (13a)$$

For Proof of the first equivalence, let us isolate for both systems circuits passing through connected points in them. Then, employing equivalence (11'), we shall obtain:

$$F_{1,2,\ldots,d,d+1,\ldots,k}+F_{k+1,\ldots,m,m+1,\ldots,p}=F_{1,2,\ldots,d,d+1,\ldots,k}+$$
$$+F_{k+1,\ldots,m,m+1,\ldots,p}+f[1]_{1,2,\ldots,d,d+1,\ldots,k}+$$
$$+\cdots+f[d]_{1,2,\ldots,d,d+1,\ldots,k}+f[k+1]_{k+1,\ldots,m,m+1,\ldots,p}+$$
$$+\cdots f[m]_{k+1,\ldots,m,m+1,\ldots,p}=F_{1,2,\ldots,d,d+1,\ldots,k}+$$
$$+f[1]_{k+1,\ldots,m,m+1,\ldots,p}+\cdots+f[k]_{k+1,\ldots,m,m+1,\ldots,p}+$$
$$+f[1]_{1,2,\ldots,d,d+1,\ldots,k}+\cdots+f[d]_{1,2,\ldots,d,d+1,\ldots,k}+$$
$$+f[k+1]_{k+1,\ldots,m,m+1,\ldots,p}+\cdots+f[m]_{k+1,\ldots,m,m+1,\ldots,p}=$$
$$=F_{1,2,\ldots,d,d+1,\ldots,k}+f[1]_{k+1,\ldots,m,m+1,\ldots,p}+$$
$$+\cdots+f[k]_{k+1,\ldots,m,m+1,\ldots,p}+f[k+1]_{k+1,\ldots,m,m+1,\ldots,p}+$$
$$+\cdots+f[m]_{k+1,\ldots,m,m+1,\ldots,p}.$$

Sanitized Copy Approved for Release 2011/07/06 : CIA-RDP80-00809A000600250680-9

Sanitized Copy Approved for Release 2011/07/06 : CIA-RDP80-00809A000600250680-9

50X1-HUM

The second part of equivalence (13) is demonstrated in like manner.

Equivalence (13a) is obtained from equivalance (13) by changing to relations with converse signs.

Equivalences (11), (11a), (12), (12a), (13), and (13a) are valid also for some systems connected in parallel or in series with different connected and disconnected points.

Basic Equivalences for Connection of Differently Disconnected and Connected Systems With Their Inversions

Let us now examine the equivalences occurring in parallel and series connections of differently connected and disconnected systems with the inversions of these systems.

A)
$$F+\bar{F}_{1,2,\ldots,k}=1 \tag{14}$$
$$F\cdot\bar{F}_{1,2,\ldots,k}=\bar{F}_{1,2,\ldots,k}(f[1]+f[2]+\ldots+f+[k]). \tag{14a}$$

For demonstration, let us isolate from system F circuits passing through points $1-1_a$, $2-2_a, \ldots, k-k_a$. Then:

$$F+\bar{F}_{1,2,\ldots,k}=F_{1,2,\ldots,k}+f[1]+f[2]+\ldots+f[k]+\bar{F}_{1,2,\ldots,k}=1.$$
$$F\cdot\bar{F}_{1,2,\ldots,k}=(F_{1,2,\ldots,k}+f[1]+f[2]+\ldots+f[k])\cdot\bar{F}_{1,2,\ldots,k}=$$
$$=\bar{F}_{1,2,\ldots,k}(f[1]+f[2]+\ldots+f[k]).$$

Changing to relations with converse signs, we shall obtain:

$$F+\bar{F}_{\underline{1},\underline{2},\ldots,\underline{k}}=\bar{F}_{\underline{1},\underline{2},\ldots,\underline{k}}+f\{1\}f\{2\}\ldots f\{k\}, \tag{15}$$
$$F\cdot\bar{F}_{\underline{1},\underline{2},\ldots,\underline{k}}=0. \tag{15a}$$

Taking the negatives of equivalences (14), (14a), (15), and (15a), we shall obtain analogous relations for the case where any system with a connection or break between certain of its points is connected with the inversion of the same system but without these connections and breaks:

$$\bar{F}+F_{1,2,\ldots,k}=F_{1,2,\ldots,k}+\overline{f[1]}\;\overline{f[2]}\ldots\overline{f[k]}, \tag{14}$$
$$\bar{F}\cdot F_{1,2,\ldots,k}=0, \tag{14'a}$$
$$\bar{F}+F_{\underline{1},\underline{2},\ldots,\underline{k}}=1, \tag{15}$$
B)
$$\bar{F}\cdot F_{\underline{1},\underline{2},\ldots,\underline{k}}=F_{\underline{1},\underline{2},\ldots,\underline{k}}\cdot(\overline{f\{1\}}+\overline{f\{2\}}+\ldots+\overline{f\{k\}}). \tag{15'a}$$
$$F+\bar{F}_{\underline{1},\underline{2},\ldots,\underline{k},k+1,\ldots,n}=F+\overline{f[1]}_{\underline{1},\underline{2},\ldots,\underline{k},k+1,\ldots,n}\times$$
$$\times\overline{f[2]}_{\underline{1},\underline{2},\ldots,\underline{k},k+1,\ldots,n}\ldots\overline{f[k]}_{\underline{1},\underline{2},\ldots,\underline{k},k+1,\ldots,n}. \tag{16}$$
$$F\cdot\bar{F}_{\underline{1},\underline{2},\ldots,\underline{k},k+1,\ldots,n}=F\cdot(f\{k+1\}_{\underline{1},\underline{2},\ldots,\underline{k},k+1,\ldots,n}+\ldots+$$
$$+\overline{f\{n\}}_{\underline{1},\underline{2},\ldots,\underline{k},k+1,\ldots,n}. \tag{16'a}$$

Sanitized Copy Approved for Release 2011/07/06 : CIA-RDP80-00809A000600250680-9

Sanitized Copy Approved for Release 2011/07/06 : CIA-RDP80-00809A000600250680-9

50X1-HUM

For proof of equivalence (16) let us isolate from system $\bar{F}_{\underline{1},\underline{2},\ldots,\underline{k},k+1,\ldots,n}$ circuits passing through connected points in it. Employing equivalence (14), we shall obtain:

$$F+\bar{F}_{\underline{1},\underline{2},\ldots,\underline{k},k+1,\ldots,n}=F+\bar{F}_{1,2,\ldots,k,k+1,\ldots,n}\times$$
$$\times\overline{f[1]}_{\underline{1},\underline{2},\ldots,\underline{k},k+1,\ldots,n}\,\overline{f[2]}_{\underline{1},\underline{2},\ldots,\underline{k},k+1,\ldots,n}\ldots f[k]_{\underline{1},\underline{2},\ldots,\underline{k},k+1,\ldots,n}=$$
$$=F+\overline{f[1]}_{\underline{1},\underline{2},\ldots,\underline{k},k+1,\ldots,n}\cdot\overline{f[2]}_{\underline{1},\underline{2},\ldots,\underline{k},k+1,\ldots,n}\times$$
$$\times\ldots\overline{f[k]}_{\underline{1},\underline{2},\ldots,\underline{k},k+1,\ldots,n}.$$

Equivalence (16a) may be obtained from (16) by changing to the relations with converse signs and by a corresponding change of indexes.

Taking the negatives of equivalences (16) and (16a), we shall obtain:

$$\bar{F}+F_{\underline{1},\underline{2},\ldots,\underline{k},k+1,\ldots,n}=\bar{F}+f\{k+1\}_{\underline{1},\underline{2},\ldots,\underline{k},k+1,\ldots,n}\times$$
$$\times\ldots f\{n\}_{\underline{1},\underline{2},\ldots,\underline{k},k+1,\ldots,n}. \qquad (16')$$

$$\bar{F}\cdot F_{\underline{1},\underline{2},\ldots,\underline{k},k+1,\ldots,n}=\bar{F}(f[1]_{1,2,\ldots,\underline{k},k+1,\ldots,n}+$$
$$+f[2]_{\underline{1},\underline{2},\ldots,\underline{k},k+1,\ldots,n}+\ldots+f[k]_{\underline{1},\underline{2},\ldots,\underline{k},k+1,\ldots,n}). \qquad (16'a)$$

c) $$F_{1,2,\ldots,k}+\bar{F}_{\underline{1},\underline{2},\ldots,\underline{k}}=F_{\underline{1},\underline{2},\ldots,\underline{k}}+f\{1\}_{1,2,\ldots,k}\cdot f\{2\}_{1,2,\ldots,k}\times$$
$$\times\ldots f\{k\}_{1,2,\ldots,k}=F_{1,2,\ldots,k}+\overline{f\{1\}}_{\underline{1},\underline{2},\ldots,\underline{k}}\,\overline{f\{2\}}_{\underline{1},\underline{2},\ldots,\underline{k}}\times$$
$$\times\ldots\overline{f\{k\}}_{\underline{1},\underline{2},\ldots,\underline{k}}. \qquad (17)$$

$$F_{1,2,\ldots,k}\cdot\bar{F}_{\underline{1},\underline{2},\ldots,\underline{k}}=0. \qquad (17a)$$

For proof, let us isolate from system $F_{1,2,\ldots,k}$ circuits parallel to elements $x_1, x_2, \ldots, x_k$.
We shall than have:

$$F_{1,2,\ldots,k}+\bar{F}_{\underline{1},\underline{2},\ldots,\underline{k}}=F_{\underline{1},\underline{2},\ldots,\underline{k}}f\{1\}_{1,2,\ldots,k}\times$$
$$\times f\{2\}_{1,2,\ldots,k}\cdots f\{k\}_{1,2,\ldots,k}+\bar{F}_{\underline{1},\underline{2},\ldots,\underline{k}}=$$
$$=\bar{F}_{\underline{1},\underline{2},\ldots,\underline{k}}+f\{1\}_{1,2,\ldots,k}f\{2\}_{1,2,\ldots,k}\cdots f\{k\}_{1,2,\ldots,k}.$$

By analogy, isolating, in accordance with (13'a), circuits in system $\bar{F}_{\underline{1},\underline{2},\ldots,\underline{k}}$, we shall obtain:

$$F_{1,2,\ldots,k}+\bar{F}_{\underline{1},\underline{2},\ldots,\underline{k}}=F_{1,2,\ldots,k}+\bar{F}_{1,2,\ldots,k}\overline{f[1]}_{1,2,\ldots,\underline{k}}\times$$
$$\times\overline{f[2]}_{\underline{1},\underline{2},\ldots,\underline{k}}\cdots\overline{f[k]}_{\underline{1},\underline{2},\ldots,\underline{k}}=F_{1,2,\ldots,k}+$$
$$+\overline{f[1]}_{\underline{1},\underline{2},\ldots,\underline{k}}\,\overline{f[2]}_{\underline{1},\underline{2},\ldots,\underline{k}}\cdots\overline{f[k]}_{\underline{1},\underline{2},\ldots,\underline{k}}.$$

When the connections are in series:

$$F_{1,2,\ldots,k}\cdot\bar{F}_{\underline{1},\underline{2},\ldots,\underline{k}}=F_{\underline{1},\underline{2},\ldots,\underline{k}}f\{1\}_{1,2,\ldots,k}f\{2\}_{1,2,\ldots,k}\times$$
$$\times\ldots f\{k\}_{1,2,\ldots,k}\bar{F}_{\underline{1},\underline{2},\ldots,\underline{k}}=0.$$

Taking the negatives of equivalences (17) and (17a), we shall obtain:

$$\bar{F}_{1,2,\ldots,k}+F_{\underline{1},\underline{2},\ldots,\underline{k}}=1.$$

$$\bar{F}_{1,2,\ldots,k}\cdot F_{\underline{1},\underline{2},\ldots,\underline{k}}=F_{\underline{1},\underline{2},\ldots,\underline{k}}(\overline{f\{1\}}_{1,2,\ldots,k}+ \qquad (17')$$
$$+\overline{f\{2\}}_{1,2,\ldots,k}+\ldots+\overline{f\{k\}}_{1,2,\ldots,k})=\bar{F}_{1,2,\ldots,k}(f[1]_{\underline{1},\underline{2},\ldots,\underline{k}}+$$

Sanitized Copy Approved for Release 2011/07/06 : CIA-RDP80-00809A000600250680-9

Sanitized Copy Approved for Release 2011/07/06 : CIA-RDP80-00809A000600250680-9

50X1-HUM

$$+f[2]_{1,2,\ldots,k}+\ldots+f[k]_{1,2,\ldots,k}). \qquad (17'a)$$

D)
$$F_{1,2,\ldots,k}+\bar{F}_{k+1,k+2,\ldots,n}=1. \qquad (18)$$

$$\bar{F}_{1,2,\ldots,k}\cdot F_{k+1,k+2,\ldots,n}=0. \qquad (18a)$$

Isolating from system $F_{1,2,\ldots,k}$ circuits passing through points $(k+1)$ — $(k+1)_a$, $(k+2)$ — $(k+2)_a$, ..., $N-N_a$, and employing equivalence (15'), we shall obtain:

$$F_{1,2,\ldots,k}+\bar{F}_{k+1,k+2,\ldots,n}=F_{1,2,\ldots,k,k+1,k+2,\ldots,n}+$$
$$+f[k+1]_{1,2,\ldots,k}+f[k+2]_{1,2,\ldots,k}+\ldots+f[n]_{1,2,\ldots,k}+$$
$$+\bar{F}_{k+1,k+2,\ldots,n}=1.$$

Equivalence (18a) may be obtained from equivalence (18) by taking its negatives.

Let us observe that when inversions of other systems are present, and particularly, when the connections are parallel -- systems with closed circuits -- and when the connections are in series -- systems with open circuits -- simplifications in transforming the systems cannot be obtained.

In parallel or series connections of systems with circuit connections or breaks in each system at different points, we shall have:

E)
$$F_{1,2,\ldots,k}+\bar{F}_{k+1,k+2,\ldots,n}=F_{1,2,\ldots,k}+\overline{f[1]}_{k+1,k+2,\ldots,n}\times$$
$$\times\overline{f[2]}_{k+1,k+2,\ldots,n}\,\overline{f[k]}_{k+1,k+2,\ldots,n}. \qquad (19)$$

$$F_{1,2,\ldots,k}\cdot\bar{F}_{k+1,k+2,\ldots,n}=\bar{F}_{k+1,k+2,\ldots,n}(f[k+1]_{1,2,\ldots,k}+$$
$$+f[k+2]_{1,2,\ldots,k}+\ldots+f[n]_{1,2,\ldots,k}. \qquad (19a)$$

For proof of equivalence (19) let us isolate from system $\bar{F}_{k+1,k+2,\ldots,n}$ in accordance with (2'), circuits passing through points $1-1_a$, $2-2_a$, ..., $k-k_a$. Thereafter, applying (14), we shall obtain:

$$F_{1,2,\ldots,k}+\bar{F}_{k+1,k+2,\ldots,n}=F_{1,2,\ldots,k}+\bar{F}_{1,2,\ldots,k,k+1,k+2,\ldots,n}\times$$
$$\times\overline{f[1]}_{k+1,k+2,\ldots,n}f[2]_{k+1,k+2,\ldots,n}\cdots\overline{f[k]}_{k+1,k+2,\ldots,n}=$$
$$=(F_{1,2,\ldots,k}+\bar{F}_{1,2,\ldots,k,k+1,k+2,\ldots,n})(F_{1,2,\ldots,k}+\overline{f[1]}_{k+1,k+2,\ldots,n}\times$$
$$\times\overline{f[2]}_{k+1,k+2,\ldots,n}\cdots\overline{f[k]}_{k+1,k+2,\ldots,n})=F_{1,2,\ldots,k}+$$
$$+\overline{f[1]}_{k+1,k+2,\ldots,n}\,\overline{f[2]}_{k+1,k+2,\ldots,n}\cdots\overline{f[f]}_{k+1,k+2,\ldots,n}.$$

Sanitized Copy Approved for Release 2011/07/06 : CIA-RDP80-00809A000600250680-9

Sanitized Copy Approved for Release 2011/07/06 : CIA-RDP80-00809A000600250680-9

50X1-HUM

Equivalence (19a) can be obtained from (19) by taking its negative and changing the indexes accordingly.

Changing to relations with converse signs, we shall have:

$$F_{1,2,\ldots,k}+\bar{F}_{k+1,k+2,\ldots,n}=\bar{F}_{k+1,k+2,\ldots,n}+f\{k+1\}_{1,2,\ldots,n}\times$$
$$\times f\{k+2\}_{1,2,\ldots,k}\cdots f\{n\}_{1,2,\ldots,k}. \qquad (20)$$

$$F_{1,2,\ldots,k}\bar{F}_{k+1,k+2,\ldots,n}=F_{1,2,\ldots,k}(\bar{F}\{1\}_{k+1,k+2,\ldots,n}+$$
$$+\bar{F}\{2\}_{k+1,k+2,\ldots,n}+\cdots+\bar{F}\{k\}_{k+1,k+2,\ldots,n}). \qquad (20a)$$

E)

$$F_{1,2,\ldots,d,d+1,\ldots,k}+\bar{F}_{k+1,\ldots,m,m+1,\ldots,p}=\bar{F}_{k+1,\ldots,m,m+1,\ldots,p}+$$
$$+f[m+1]_{1,2,\ldots,d,d+1,\ldots,k}+\cdots+f[p]_{1,2,\ldots,d,d+1,\ldots,k}+$$
$$+f\{d+1\}_{1,2,\ldots,d,d+1,\ldots,k,m+1,\ldots,p}\cdots f\{k\}_{1,2,\ldots,d,d+1,\ldots,k,m+1,\ldots,p}\times$$
$$\times f\{k+1\}_{1,2,\ldots,d,d+1,\ldots,k,m+1,\ldots,p}\cdots f\{m\}_{1,2,\ldots,d,d+1,\ldots,k,m+1,\ldots,p}. \qquad (21)$$

$$F_{1,2,\ldots,d,d+1,\ldots,k}\bar{F}_{k+1,\ldots,m,m+1,\ldots,p}=\bar{F}_{k+1,\ldots,m,m+1,\ldots,p}\times$$
$$\times(f[1]_{1,2,\ldots,d,d+1,\ldots,k,k+1,\ldots,m}+\cdots+f[d]_{1,2,\ldots,d,d+1,\ldots,k,k+1,\ldots,m}+$$
$$+f[m+1]_{1,2,\ldots,d,d+1,\ldots,k,k+1,\ldots,m}+\cdots+f[p]_{1,2,\ldots,d,d+1,\ldots,k,k+1,\ldots,m})\times$$
$$\times f\{k+1\}_{1,2,\ldots,d,d+1,\ldots,k}\cdots f\{m\}_{1,2,\ldots,d,d+1,\ldots,k}. \qquad (21a)$$

For proof of equivalence (21) let us isolate from system $F_{1,2,\ldots,d,d+1,\ldots,k}$ circuits passing system $\bar{F}_{k+1,\ldots,m,m+1,\ldots,p}$ through disconnected points, and thereafter let us isolate from the system obtained circuits passing in it parallel to points having a short circuit in the inverse system and disconnected in the system without inversion. Employing thereafter equivalence (15), we shall obtain:

$$F_{1,2,\ldots,d,d+1,\ldots,k}+\bar{F}_{k+1,\ldots,m,m+1,\ldots,p}=F_{1,2,\ldots,d,d+1,\ldots,k,m+1,\ldots,p}+$$
$$+f[m+1]_{1,2,\ldots,d,d+1,\ldots,k}+\cdots+f[p]_{1,2,\ldots,d,d+1,\ldots,k}+\bar{F}_{k+1,\ldots,m,m+1,\ldots,p}=$$
$$=F_{1,2,\ldots,d,d+1,\ldots,k,m+1,\ldots,m,m+1,\ldots,p}f\{d+1\}_{1,2,\ldots,d,d+1,\ldots,k,m+1,\ldots,p}\times$$
$$\times\cdots f\{k\}_{1,2,\ldots,d,d+1,\ldots,k,m+1,\ldots,p}f\{k+1\}_{1,2,\ldots,d,d+1,\ldots,k,m+1,\ldots,p}\times$$
$$\times\cdots f\{m\}_{1,2,\ldots,d,d+1,\ldots,k,m+1,\ldots,p}+f[m+1]_{1,2,\ldots,d,d+1,\ldots,k}+$$
$$+\cdots+f[p]_{1,2,\ldots,d,d+1,\ldots,k}+\bar{F}_{k+1,\ldots,m,m+1,\ldots,p}=\bar{F}_{k+1,\ldots,m,m+1,\ldots,p}+$$
$$+f\{d+1\}_{1,2,\ldots,d,d+1,\ldots,k,m+1,\ldots,p}\cdots f\{k\}_{1,2,\ldots,d,d+1,\ldots,k,m+1,\ldots,p}\times$$
$$\times f\{k+1\}_{1,2,\ldots,d,d+1,\ldots,k,m+1,\ldots,p}\cdots f\{m\}_{1,2,\ldots,d,d+1,\ldots,k,m+1,\ldots,p}+$$
$$+f[m+1]_{1,2,\ldots,d,d+1,\ldots,k}+\cdots+f[p]_{1,2,\ldots,d,d+1,\ldots,k}.$$

Taking the negative of equivalences (21) and (21a) and changing the indexes accordingly, we shall obtain certain other expressions for them:

$$F_{1,2,\ldots,d,d+1,\ldots,k}+\bar{F}_{k+1,\ldots,m,m+1,\ldots,p}=F_{1,2,\ldots,d,d+1,\ldots,k}+$$
$$+\bar{f}[d+1]_{1,2,\ldots,d,k+1,\ldots,m,m+1,\ldots,p}\cdots\bar{f}[k]_{1,2,\ldots,d,k+1,\ldots,m,m+1,\ldots,p}\times$$
$$\times\bar{f}[k+1]_{1,2,\ldots,d,k+1,\ldots,m,m+1,\ldots,p}\cdots\bar{f}[m]_{1,2,\ldots,d,k+1,\ldots,m,m+1,\ldots,p}+$$
$$+\bar{F}\{1\}_{k+1,\ldots,m,m+1,\ldots,p}+\cdots+\bar{F}\{d\}_{k+1,\ldots,m,m+1,\ldots,p} \qquad (21')$$

Sanitized Copy Approved for Release 2011/07/06 : CIA-RDP80-00809A000600250680-9

Sanitized Copy Approved for Release 2011/07/06 : CIA-RDP80-00809A000600250680-9

50X1-HUM

$$F_{\underline{1},\underline{2},\ldots,\underline{d},d+1,\ldots,k}\,\overline{f}_{\underline{k+1},\ldots,\underline{m},m+1,\ldots,p} = F_{\underline{1},\underline{2},\ldots,\underline{d},d+1,\ldots,k} \times$$
$$\times \left(\overline{f\{1\}}_{d+1,\ldots,k,\underline{k+1},\ldots,\underline{m},m+1,\ldots,p} + \cdots + \overline{f\{d\}}_{d+1,\ldots,k,\underline{k+1},\ldots,\underline{m},m+1,\ldots,p} + \right.$$
$$\left. + \overline{f\{m+1\}}_{d+1,\ldots,k,\underline{k+1},\ldots,\underline{m},m+1,\ldots,p} + \cdots + \overline{f\{p\}}_{d+1,\ldots,k,\underline{k+1},\ldots,\underline{m},m+1,\ldots,p}\right) \times$$
$$\times \overline{f[d+1]}_{\underline{k+1},\ldots,\underline{m},m+1,\ldots,p} \cdots \overline{f[k]}_{\underline{k+1},\ldots,\underline{m},m+1,\ldots,p} \qquad (21'a)$$

Let us note that the equivalences obtained above are valid, just as in the case of systems without inversions, not merely for two, but for a great number of systems connected in parallel or in series.

Connections of Differently Connected and Disconnected Systems With Circuits Contained in Them

In conclusion, let us consider relations in parallel or series connections of a contact relay system with modifications of some circuits contained in it.

Let us first point out that according to the well-known relations of symbolic logic:

$$x + f(x,y,z,\ldots,w) = x + f(0,y,z,\ldots,w),$$
$$\bar{x} + f(x,y,z,\ldots,w) = \bar{x} + f(1,y,z,\ldots,w),$$

we shall find that the parallel connection of any system with one of the circuits contained in it or with one of the inversions of this circuit is equivalent, in the first case to its own system, and in the second to a continuously closed circuit.

Applying the relations indicated above we shall obtain:

$$F_{\underline{1},\underline{2},\ldots,k} + f[m]_{\underline{1},\underline{2},\ldots,k} = F_{\underline{1},\underline{2},\ldots,k,m} + f[m]_{\underline{1},\underline{2},\ldots,k} = F_{\underline{1},\underline{2},\ldots,k} \qquad (22)$$
$$F_{\underline{1},\underline{2},\ldots,k} + \overline{f[m]}_{\underline{1},\underline{2},\ldots,k} = F_{\underline{1},\underline{2},\ldots,k,\underline{f[m]}} + \overline{f[m]}_{\underline{1},\underline{2},\ldots,k}$$

Since $\underline{f[m]}_{\underline{1},\underline{2},\ldots,k} = 1$ and $F_{\underline{1},\underline{2},\ldots,k,\underline{f[m]}} = F_{\underline{1},\underline{2},\ldots,k,m} + \underline{f[m]}_{\underline{1},\underline{2},\ldots,k} =$
$= F_{\underline{1},\underline{2},\ldots,k,m} + 1 = 1,$

It follows that

$$F_{\underline{1},\underline{2},\ldots,k} + \overline{f[m]}_{\underline{1},\underline{2},\ldots,k} = 1 \qquad (22a)$$

Analogously, according to similar relations in symbolic logic for connections in series, namely:

$$xf(x,y,z,\ldots,w) = xf(1,y,z,\ldots,w),$$
$$xf(x,y,z,\ldots,w) = \bar{x}f(0,y,z,\ldots,w),$$

we shall find that in the series connections of any system with one of the circuits contained in it or one of the inversions of this circuit, the resultant system will be equivalent, in the first case only to this circuit, and in the second case to the same series connection, but with those circuits eliminated from the original system with the inversions of which the system is connected.

Sanitized Copy Approved for Release 2011/07/06 : CIA-RDP80-00809A000600250680-9

Sanitized Copy Approved for Release 2011/07/06 : CIA-RDP80-00809A000600250680-9

CONFIDENTIAL

50X1-HUM

Making use of these relations, we shall obtain:

$$F_{1,2,\ldots,k}\cdot f[m]_{1,2,\ldots,k}=F_{1,2,\ldots,}f[m]f[m]_{1,2,\ldots,k}=f[m]_{1,2,\ldots,k}. \tag{23}$$

$$F_{1,2,\ldots,k}\cdot\overline{f[m]}_{1,2,\ldots,k}=F_{1,2,\ldots,k,m}\overline{f[m]}_{1,2,\ldots,k} \tag{23a}$$

Changing to equivalences with converse signs, by analogy we shall have:

$$F_{1,2,\ldots,k}+f\{m\}_{1,2,\ldots,k}=f\{m\}_{1,2,\ldots,k}, \tag{24}$$

$$F_{1,2,\ldots,k}+\overline{f\{m\}}_{1,2,\ldots,k}=F_{1,2,\ldots,k,m}+f\{m\}_{1,2,\ldots,k}, \tag{24a}$$

$$F_{1,2,\ldots,k}\cdot\overline{f\{m\}}_{1,2,\ldots,k}=F_{1,2,\ldots,k}, \tag{25}$$

$$F_{1,2,\ldots,k}\overline{f\{m\}}_{1,2,\ldots,k}=0. \tag{25a}$$

In the case of a parallel or series connection of any system with circuits of an element belonging to another system with connected or disconnected points other than in the first system, the corresponding equivalences can be obtained if we isolate from the first system the circuits in series or parallel of this same element and proceed to study them as independent systems to which all the equivalences cited above can be applied.

For example:

$$F_{1,2,\ldots,k}+f[P]_{k+1,k+2,\ldots,n}=F_{1,2,\ldots,k,p}+f[P]_{1,2,\ldots,k}+f[P]_{k+1,k+2,\ldots,n}=$$
$$=F_{1,2,\ldots,k,p}+(f[P]_{1,2,\ldots,k,p}+f[P]_{k+1,k+2,\ldots,n,p})P.$$

As, in accordance with (10),

$$f[P]_{1,2,\ldots,k,p}+f[P]_{k+1,k+2,\ldots,n,p}=f[P]_{k+1,k+2,\ldots,n,p},$$

it follows that

$$F_{1,2,\ldots,k}+f[P]_{k+1,k+2,\ldots,n}=F_{1,2,\ldots,k,p}+f[P]_{k+1,k+2,\ldots,n}. \tag{26}$$

In other connections and breaks:

$$F_{1,2,\ldots,k}+f[P]_{k+1,k+2,\ldots,n}=F_{1,2,\ldots,k,p}+f[P]_{1,2,\ldots,k}+ \tag{27}$$
$$+f[P]_{k+1,k+2,\ldots,n}=F_{1,2,\ldots,k,p}+f[P]_{1,2,\ldots,k}=F_{1,2,\ldots,k}.$$

In like manner

$$F_{1,2,\ldots,k}\cdot f[P]_{k+1,k+2,\ldots,k}=(F_{1,2,\ldots,k,p}+f[P]_{1,2,\ldots,k})\times \tag{26a}$$
$$\times f[P]_{k+1,k+2,\ldots,n}=F_{1,2,\ldots,k,p}f[P]_{k+1,k+2,\ldots,n}+f[P]_{1,2,\ldots,k}.$$

$$F_{1,2,\ldots,k}\cdot f[P]_{k+1,k+2,\ldots,n}=(F_{1,2,\ldots,k,p}+f[P]_{1,2,\ldots,k})\times$$
$$\times f[P]_{k+1,k+2,\ldots,n}=F_{1,2,\ldots,k,p}f[P]_{k+1,k+2,\ldots,n}+ \tag{27a}$$
$$+f[P]_{k+1,k+2,\ldots,n}=f[P]_{k+1,k+2,\ldots,n}.$$

Changing to relations with converse signs, we shall have:

$$F_{1,2,\ldots,k}+f\{P\}_{k+1,k+2,\ldots,n}=f\{P\}_{k+1,k+2,\ldots,n}. \tag{28}$$

CONFIDENTIAL

Sanitized Copy Approved for Release 2011/07/06 : CIA-RDP80-00809A000600250680-9

Sanitized Copy Approved for Release 2011/07/06 : CIA-RDP80-00809A000600250680-9

50X1-HUM

$$F_{1,2,\ldots,k} + f\{p\}_{k+1,k+2,\ldots,n} = (F_{1,2,\ldots,k} + f\{p\}_{k+1,k+2,\ldots,n}) f\{p\}_{1,2,\ldots,k}. \quad (29)$$

$$F_{1,2,\ldots,k} \cdot f\{p\}_{k+1,k+2,\ldots,n} = F_{1,2,\ldots,k}. \quad (28a)$$

$$F_{1,2,\ldots,k} \cdot f\{p\}_{k+1,k+2,\ldots,n} = F_{1,2,\ldots,n,p} f\{p\}_{k+1,k+2,\ldots,n}. \quad (29) \text{ [sic]}$$

In like manner relations may be obtained for other cases of a parallel and series connection of any system with circuits belonging to another system.

Example of Transformation of Differently Connected and Disconnected Circuits

We shall examine a sample transformation of differently connected and disconnected systems. Let us suppose that the system is that shown in Figure 9a and that it is necessary to simplify it. Isolating parts of the system interconnected in series and in parallel, we shall observe that it may be represented in the form of systems F_I and F_{II} connected in series, to which system F_{III} (Figure 9b) is connected in parallel.

To represent these systems as differently connected and disconnected, it is first necessary to find a base system. The latter must, obviously, contain all the elements in systems F_I, F_{II} and F_{III}. Inasmuch as in system F_{III} the greater part of the elements which are in the other systems appear with the negative sign, then it is natural to assume that F_{III} is inverse.

Let us determine a non-inverse system [h] by means of graphic transformation (Figure 10). Comparing it with system F_{II}, it is easy to note that both are produced from the system of Figure 10d, and that system $F_{II} = F_{a,d}$, and system $F_{III} = \bar{F}_{\bar{c}}$. Moreover, comparing the base system, Figure 10d, with system F_I, it is readily seen that the latter represents circuits passing parallel to element e in this system when elements $\bar{c}$ and k are short circuited. Thus $F_I = f\{e\}_{\bar{c},k}$, and the system in Figure 9a may be written symbolically in the form:

$$F_I F_{II} + F_{III} = f\{e\}_{\bar{c},k} F_{a,d} + \bar{F}_{\bar{c}}.$$

Applying equivalences (28a) and (19), we shall obtain:

$$f\{e\}_{\bar{c},k} \cdot F_{a,d} + \bar{F}_{\bar{c}} = F_{a,d} + \bar{F}_{\bar{c}} = F_{a,d} + \overline{f[a]_{\bar{c}}}\ \overline{f[d]_{\bar{c}}}.$$

Transforming $\overline{f[a]_{\bar{c}}}\ \overline{f[d]_{\bar{c}}}$, we shall have (3):

$$\overline{f[a]_{\bar{c}}} \cdot \overline{f[d]_{\bar{c}}} = \overline{ae} \cdot \overline{de\,(b + ac)} = (\bar{a} + \bar{e})\,[\bar{d} + \bar{e} + \bar{b}(a + \bar{c})] =$$
$$= \bar{e} + \bar{a}[\bar{d} + \bar{b}(a + \bar{c})] = \bar{e} + \bar{a}[\bar{d} + \bar{b}\bar{c}].$$

Thus:

$$F_I F_{II} + F_{III} = F_{a,d} + \bar{e} + \bar{a}(\bar{d} + \bar{b}\bar{c}).$$

As there is in system $F_{a,d}$ the circuit $b\bar{c}$ connected in parallel, it follows that

$$\bar{e} + \bar{a}(\bar{d} + \bar{b}\bar{c}) + bc = \bar{e} + \bar{a}(\bar{d} + \bar{c}) + b\bar{c}.$$

Finally we shall have:

$$F_I F_{II} + F_{III} = F_{a,d} + \bar{e} + \bar{a}(\bar{d} + \bar{c}).$$

The resultant system is represented by Figure 11b.

Sanitized Copy Approved for Release 2011/07/06 : CIA-RDP80-00809A000600250680-9

Sanitized Copy Approved for Release 2011/07/06 : CIA-RDP80-00809A000600250680-9

50X1-HUM

BIBLIOGRAPHY

1. Shestakov, V., Algebra of Dipole Systems Built Up Exclusively From Dipoles (A-System Algebra), Avtomatika i Telemekhanika, 2, 15, 1941.

2. Shannon, C., A Symbolic Analysis of Relay and Switching Circuits, Trans. of Am. Inst. of El. Eng., 713, 1938.

3. Gavrilov, M. A., Methods for the Synthesis of Contact Relay Systems, Elektrichestvo, 2, 54, 1946.

4. Gavrilov, M. A., Structural Synthesis and Analysis of Contact Relay Systems; Thesis for the Competition for the Degree of Doctor of Technical Sciences, 1946.

5. Gavrilov, M. A., Analysis of Contact Relay Systems, Elektrichestvo, 4, 5, 1947.

[Figures follow.]

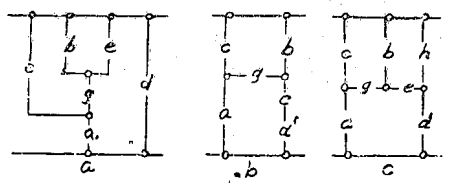

Figure 1. Differently Connected and Disconnected Systems

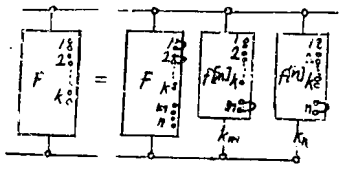

Figure 2. Isolation of Circuits in Series Passing Through Elements m and n

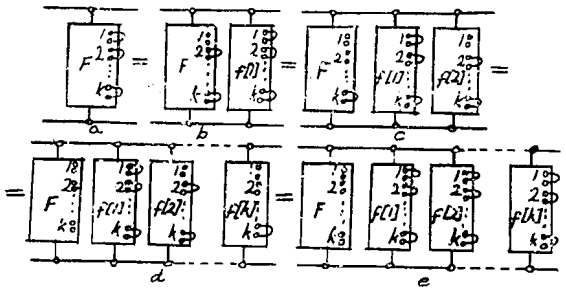

Figure 3. Isolation of Circuits Passing Through Short-Circuited Points

Sanitized Copy Approved for Release 2011/07/06 : CIA-RDP80-00809A000600250680-9

Sanitized Copy Approved for Release 2011/07/06 : CIA-RDP80-00809A000600250680-9

50X1-HUM

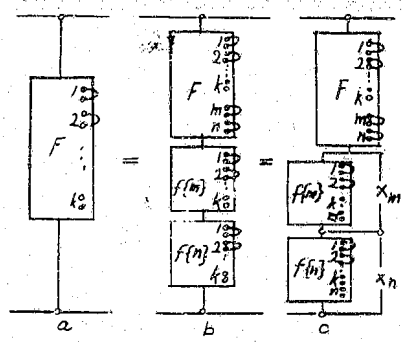

Figure 4. Isolation of Circuits Parallel to Elements m and n

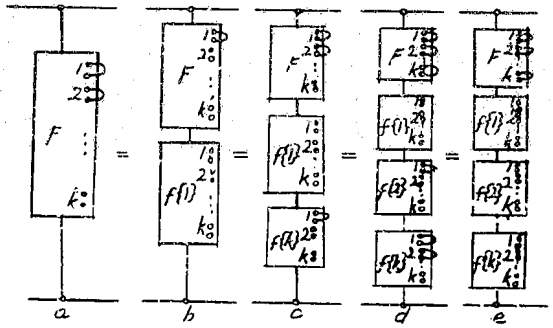

Figure 5. Isolation of Circuits Parallel to Points Having Disconnection

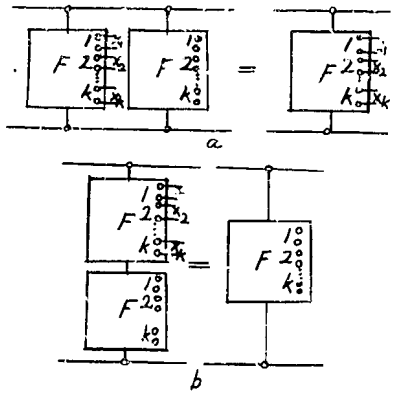

Figure 6. Systems Illustrating Equivalences (6) and (6a)

Sanitized Copy Approved for Release 2011/07/06 : CIA-RDP80-00809A000600250680-9

Sanitized Copy Approved for Release 2011/07/06 : CIA-RDP80-00809A000600250680-9

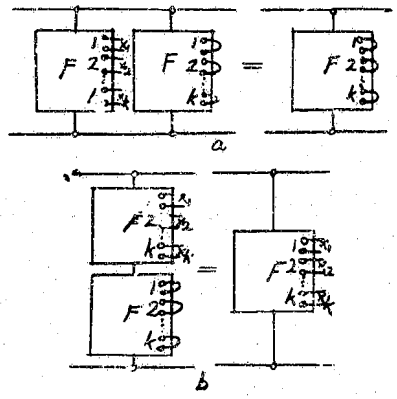

Figure 7. Systems Illustrating Equivalences (7) and (7a)

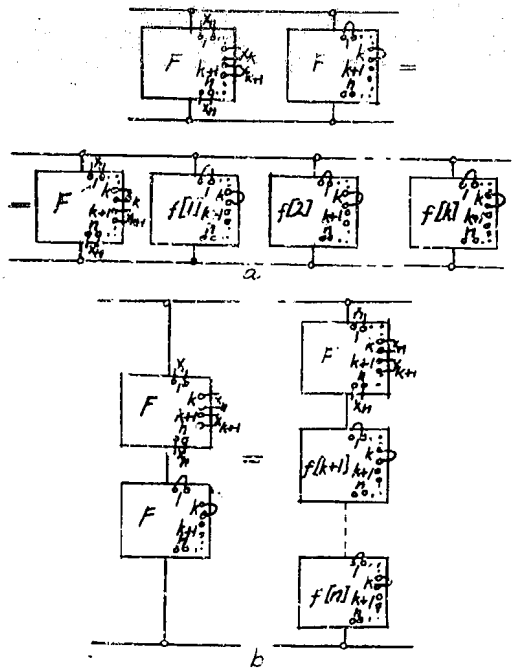

Figure 8. Systems Illustrating Equivalences (8) and (8a)

Sanitized Copy Approved for Release 2011/07/06 : CIA-RDP80-00809A000600250680-9

Sanitized Copy Approved for Release 2011/07/06 : CIA-RDP80-00809A000600250680-9

50X1-HUM

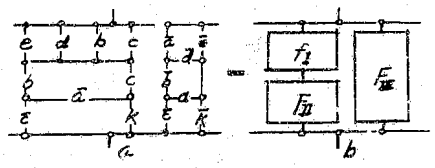

Figure 9. Example of the Transformation of Differently Connected and Disconnected Systems

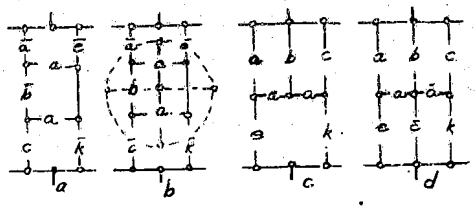

Figure 10. Transformation of System F_{III} and Derivation of the Base System

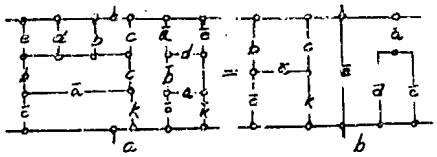

Figure 11. Resultant System

- E N D -

Sanitized Copy Approved for Release 2011/07/06 : CIA-RDP80-00809A000600250680-9