Approved For Release 2007/09/28 : CIA-RDP80-00810A004700070009-7

25X1

25X1

638112

25X1

CENTRAL INTELLIGENCE AGENCY

INFORMATION REPORT

This material contains information affecting the National Defense of the United States within the meaning of the Espionage Laws, Title 18, U.S.C. Secs. 793 and 794, the transmission or revelation of which in any manner to an unauthorized person is prohibited by law.

25X1

SECRET

COUNTRY	USSR (Baltic)/Poland	REPORT	
SUBJECT	Soviet Naval Vessels Observed at Swinoujscie	DATE DISTR.	23 November 1954
		NO. OF PAGES	5
DATE OF INFO.		REQUIREMENT NO.	RD
PLACE ACQUIRED		REFERENCES	

This is UNEVALUATED

25X1

25X1

THE SOURCE EVALUATIONS IN THIS REPORT ARE DEFINITIVE.
THE APPRAISAL OF CONTENT IS TENTATIVE.
(FOR KEY SEE REVERSE)

1. At 0500 on 3 July 1954, Soviet auxiliary vessel was sighted near buoy No. 6 of the Swinoujscie-East approach channel making for the harbor.[1] The vessel was estimated to be 700 to 800 GRT. On the forecastle was a piece of equipment which looked like a "folded-back landing flap". About 30 soldiers were standing on the forecastle. Landing crafts followed vessel in line formation. (See sketch of vessel on page 2.) 25X1

2. At 0730 on 3 July, ten Elco-type PT boats coming from east-northeast arrived at Swinoujscie. At 0810, two larger vessels, probably torpedo boats, also arrived. From 3 to 7 July, PT boats and minesweepers moved continuously in and out of the harbor. On 7 July, nine minesweepers, left Swinoujscie on an east-northeasterly course. 25X1

25X1

3. At 1600 on 7 July, a convoy led by four minesweepers approached at slow speed from east-northeast through a new channel near buoy No. 7, which was marked with small red buoys. A thick tow rope extended into the water from the stern of each of the boats, but no foam stripes were seen. The minesweepers were followed by submarine chasers destroyer, submarine chasers, submarine, and submarine chaser which was the last vessel in the group. (See sketch of destroyer on page 3 and sketch of submarine on page 4.) After reaching the approach buoy, submarine chasers and destroyer made for Swinoujscie at high speed. The minesweepers and submarine continued on course at slow speed. Minesweeper collected the red buoys which had been laid out. At 2000 on 7 July, submarine chasers left Swinoujscie taking an east-northeasterly course. 25X1

25X1

25X1

25X1

25X1

25X1

25X1

25X1

25X1

1. Comment: On 3 July 1954, buoy No. 12 of the Swinoujscie-East approach channel had the designation buoy No. 6 and had been shifted 1,000 meters further to the east, and buoy No. 13 had been redesignated buoy No. 7. The group of landing craft was, therefore, seen near former buoy No. 12. 25X1

25X1

SECRET

STATE	X	ARMY	X	NAVY	#X	AIR	#X	FBI		AEC					

(NOTE: Washington distribution indicated by "X"; Field distribution by "#".)

25X1

Approved For Release 2007/09/28 : CIA-RDP80-00810A004700070009-7

Approved For Release 2007/09/28 : CIA-RDP80-00810A004700070009-7

25X1

Legend to Sketch

1. Long superstructure with rectangular hatchcovers, some of them open.
2. Gun with estimated caliber of 100 mm.
3. Rod antenna.
4. Wire extending to the bow of the vessel.
5. Unidentified device on mast, looking like an anemometer.
6. Soviet ensign.

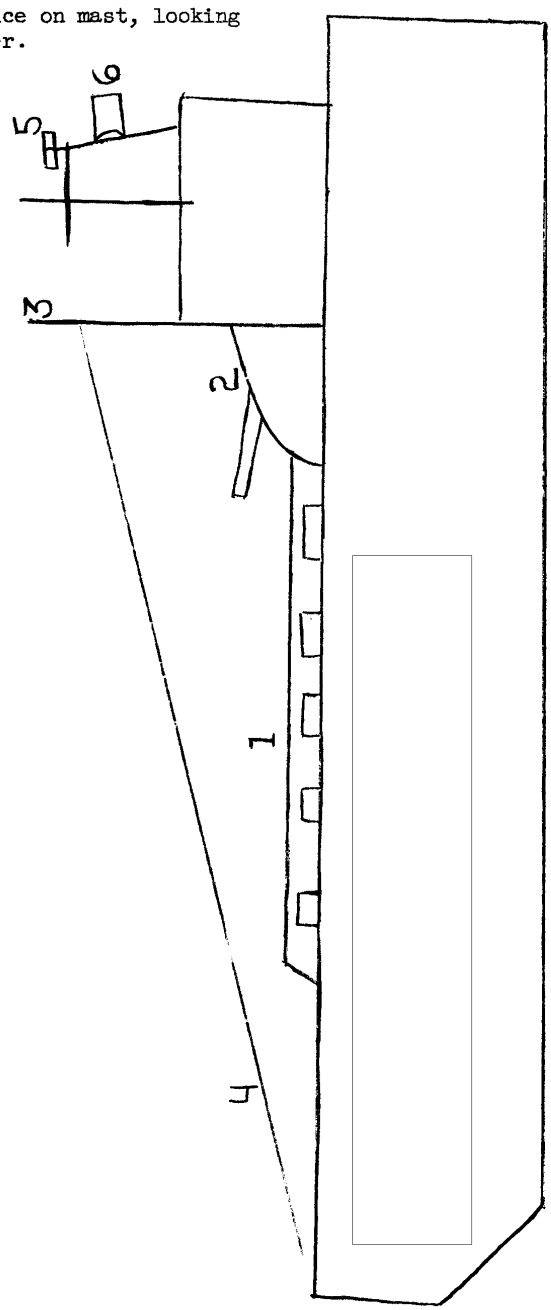

SKETCH NO. 1
LANDING CRAFT SEEN NEAR SWINOUJSCIE

25X1

Approved For Release 2007/09/28 : CIA-RDP80-00810A004700070009-7

Approved For Release 2007/09/28 : CIA-RDP80-00810A004700070009-7

25X1

Legend to Sketch

1. Turret, number of guns unknown.
2. Range finder on bridge.
3. Trellis mast; one end of the yard mounted a small cross, the other end an antenna-like device.
4. Sets of torpedo tubes.
5. Rangefinder.
6. Turret, number of guns unknown.

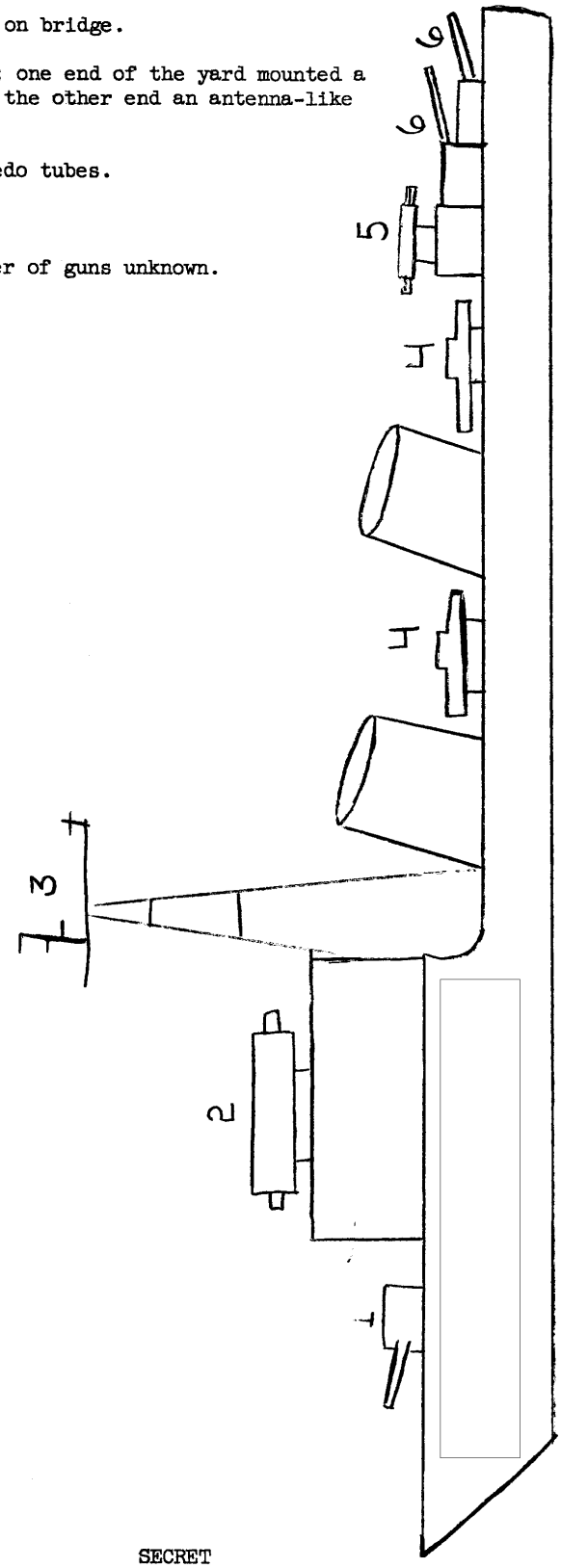

SKETCH No.2

25X1

25X1

Approved For Release 2007/09/28 : CIA-RDP80-00810A004700070009-7

Approved For Release 2007/09/28 : CIA-RDP80-00810A004700070009-7

25X1

Legend to Sketch

1. Small slits in the hull.
2. Small caliber gun.
3. and 4. DF loop aerials.
5. Antenna.
6. Large slits in the hull.
7. Triangular device, looking like the rudder of an aircraft.

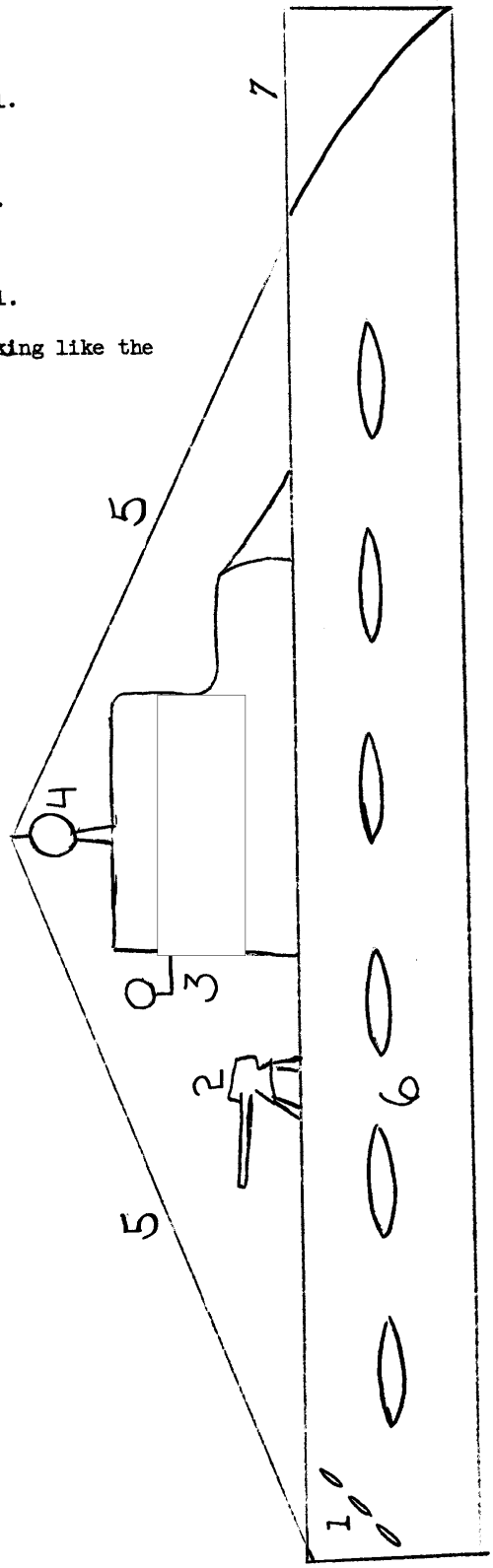

25X1

25X1

SKETCH NO. 3

SUBMARINE

Approved For Release 2007/09/28 : CIA-RDP80-00810A004700070009-7

25X1
Approved For Release 2007/09/28 : CIA-RDP80-00810A004700070009-7

Page Denied

Approved For Release 2007/09/28 : CIA-RDP80-00810A004700070009-7