Declassified in Part - Sanitized Copy Approved for Release 2012/01/04 : CIA-RDP80T00246A062100120001-8

50X1-HUM

Page Denied

Declassified in Part - Sanitized Copy Approved for Release 2012/01/04 : CIA-RDP80T00246A062100120001-8

Declassified in Part - Sanitized Copy Approved for Release 2012/01/04 : CIA-RDP80T00246A062100120001-8 50X1-HUM

HYDRAULIC BOOSTERS
БУ-1У, БУ-10 and БУ-13М

DESCRIPTION AND OPERATING INSTRUCTIONS

50X1-HUM

Declassified in Part - Sanitized Copy Approved for Release 2012/01/04 : CIA-RDP80T00246A062100120001-8

Declassified in Part - Sanitized Copy Approved for Release 2012/01/04 : CIA-RDP80T00246A062100120001-8

50X1-HUM

CONTENTS

	Page
Introduction	7
I. Purpose	10
II. Operating Principle	11
III. Type БУ-10 Hydraulic Boosters	15
1. Basic Specifications	17
2. Operating Principle of БУ-10Б and БУ-10М Hydraulic Boosters	20
3. Operating Principle of БУ-10 Hydraulic Boosters	24
4. Operating Principle of БУ-5А and БУ-8А Hydraulic Boosters	25
5. Description of БУ-10 Booster Design	25
IV. Type БУ-13М Hydraulic Boosters	33
1. Basic Specifications	34
2. Operating Principle	37
3. Description of Design	42
V. Type БУ-1У Hydraulic Boosters	45
1. Basic Specifications	47
2. Operating Principle	49
3. Description of Design	52
VI. Installation and Maintenance Instructions	58
1. Delivery Set	58
2. Installation of Hydraulic Booster on Bracket and Checking Standard of Installation	58
3. Installation of Hydraulic Booster on Aircraft	63
4. Operation and Maintenance	65

50X1-HUM

Declassified in Part - Sanitized Copy Approved for Release 2012/01/04 : CIA-RDP80T00246A062100120001-8

Declassified in Part - Sanitized Copy Approved for Release 2012/01/04 : CIA-RDP80T00246A062100120001-8

Page

VII. Hydraulic Booster and Aircraft Control System Trouble Shooting 68
VIII. Scheduled Maintenance 74
1. Scheduled Maintenance of Hydraulic Boosters БУ-10 and БУ-13М 74
2. Scheduled Maintenance of Hydraulic Boosters БУ-1У 76
IX. Corrosion-Preventive Treatment and Storage of Hydraulic Boosters 79

Appendices

1. Specification of type БУ-10 hydraulic booster units 85
Specification of type БУ-10 hydraulic booster parts 86
2. Specification of type БУ-13М hydraulic booster units 93
Specification of type БУ-13М hydraulic booster parts 94
3. Specification of type БУ-1У hydraulic booster units 100
Specification of type БУ-1У hydraulic booster parts 102
4. Individual set of spare parts for type БУ-10 hydraulic boosters 106
5. Individual set of spare parts for type БУ-13М hydraulic boosters 108
6. Individual set of spare parts for type БУ-1У hydraulic boosters 110
7. List of erecting tools 112
8. Table of clearances and fits. Boosters БУ-10, БУ-10Б and БУ-10М 113
9. Table of clearances and fits. Boosters БУ-5А and БУ-8А 122
10. Table of clearances and fits. Boosters БУ-13М, БУ-14 and БУ-14МС 130
11. Table of clearances and fits. Boosters БУ-1У, БУ-1М and БУ-1М-РВ 137
12. Outline dimensions drawing of hydraulic booster БУ-10Б
13. Outline dimensions drawing of hydraulic booster БУ-10М

50X1-HUM

14. Outline dimensions drawing of hydraulic booster БУ-10
15. Outline dimensions drawing of hydraulic booster БУ-5А
16. Outline dimensions drawing of hydraulic booster БУ-8А
17. Outline dimensions drawing of hydraulic booster БУ-13М
18. Outline dimensions drawing of hydraulic booster БУ-14М
19. Outline dimensions drawing of hydraulic booster БУ-14МС
20. Outline dimensions drawing of hydraulic booster БУ-1У
21. Outline dimensions drawing of hydraulic booster БУ-1М
22. Outline dimensions drawing of hydraulic booster БУ-1М-РВ

Supplement

Checking БУ-13М and БУ-14М hydraulic boosters for condition and fluid pressure in return line

50X1-HUM

Declassified in Part - Sanitized Copy Approved for Release 2012/01/04 : CIA-RDP80T00246A062100120001-8

Declassified in Part - Sanitized Copy Approved for Release 2012/01/04 : CIA-RDP80T00246A062100120001-8

INTRODUCTION

The hydraulic boosters manufactured by the plant fall by their design in three main groups: type БУ-1У, hydraulic boosters, type БУ-10 hydraulic boosters and type БУ-13М hydraulic boosters.

The first group includes hydraulic boosters БУ-1, БУ-1У, БУ-1М and БУ-1М-РВ, the second group includes hydraulic boosters БУ-10, БУ-10Б, БУ-10М, БУ-5А and БУ-8А, the third group includes hydraulic boosters БУ-13М, БУ-14М and БУ-14МС.

The second group also comprises hydraulic boosters БУ-9А, БУ-9Б and БУ-9А-М, which are still used in aircraft. To improve performance of these hydraulic boosters, certain modifications in design were introduced, after which these boosters were designated БУ-10, БУ-10Б and БУ-10М.

The hydraulic booster groups differ from one another only by certain operation details and peculiarities of design. For example, type БУ-10 hydraulic boosters, as distinct from type БУ-1У and type БУ-13М have a hydraulic lock by means of which the slide valve play is taken up automatically when the pressure is cut off. Type БУ-10 hydraulic boosters are provided with a hydraulic two-way damper and types БУ-1У and БУ-13М hydraulic boosters are provided with a one-way vacuum damper.

In type БУ-1У hydraulic boosters the cross feed, i.e. transfer of fluid from one cavity to another, is effected during the pressure cut-off by means of floating plungers, while in type БУ-10 and БУ-13М hydraulic boosters - by spring-loaded plungers.

Declassified in Part - Sanitized Copy Approved for Release 2012/01/04 : CIA-RDP80T00246A062100120001-8

Declassified in Part - Sanitized Copy Approved for Release 2012/01/04 : CIA-RDP80T00246A062100120001-8

In hydraulic boosters of БУ-1У type the slide valve device, the cross-feed plungers and the metering needle are arranged inside the operating rod. In type БУ-10 hydraulic boosters the two latter elements are located inside the head, and the slide valve is fitted in a special case which is mounted on the hydraulic booster head.

In type БУ-13М hydraulic boosters the slide valve and the ball valve are located inside the booster head, while the cross-feed plungers - inside the operating rod. Besides, in the case of БУ-1У and БУ-13М hydraulic boosters the power from the rods is transmitted to the slide valve with a ratio equal to 1, whereas in type БУ-10 hydraulic boosters the ratio is approximately 1/2.

Besides the differences in overall dimensions and in the operating fluid pressure, a number of hydraulic boosters have certain differences in the design of individual elements as compared with the typical hydraulic booster of the group.

Hydraulic boosters БУ-1М differ from hydraulic boosters БУ-1У by reinforced trunnions and the extent of overlap of the slide valve pair.

Hydraulic boosters БУ-10М and БУ-10Б differ from hydraulic boosters БУ-10 by the presence of automatic delivery and drain valves for switching over to the duplicate system in case the main system fails.

Hydraulic boosters БУ-5А and БУ-8А differ from hydraulic boosters БУ-10 in that they are provided with an auxiliary cross-feed valve located inside the operating rod cavity, and a return valve in the fluid supply pipe connection.

Hydraulic boosters БУ-9А, БУ-9Б, БУ-9АМ are identical with hydraulic boosters БУ-10 by their design and principle of operation.

Hydraulic boosters БУ-10, БУ-10Б and БУ-10М differ from hydraulic boosters БУ-9А, БУ-9Б and БУ-9АМ, respectively by improved anti-corrosive coating, a sealing unit consisting

of one round rubber ring and two leather rings instead of a pack of tongued cups, an improved design of duplicate system automatic switch-over valves and an improved design of the slide valve device.

Hydraulic booster БУ-13М differs from hydraulic booster БУ-14М only by the size of the actuating cylinder. Hydraulic boosters БУ-14М and БУ-14МС differ from each other by the stroke of the main and duplicate slide valves, the design of the cylinder trunnions and the rod end-pieces.

Declassified in Part - Sanitized Copy Approved for Release 2012/01/04 : CIA-RDP80T00246A062100120001-8

Declassified in Part - Sanitized Copy Approved for Release 2012/01/04 : CIA-RDP80T00246A062100120001-8

I. PURPOSE

Hydraulic boosters (Figs 1, 2 and 3) are auxiliary power units. They serve the purpose of reducing the force transmitted by the aircraft or helicopter controls to the control stick or control pedals.

During a flight at high speed a great part of the aerodynamic force acting on the control surfaces of the aircraft fitted with conventional control leverage would be transmitted directly to the pilot's hand.

Depending on the purpose and functions of the control units, the hydraulic boosters may be included either in the reversible or irreversible control systems. In the first case all the loads transmitted from the ailerons, elevators, or the swash-plate are taken directly by the hydraulic booster. Irrespective of the magnitude of the load the pilot will feel only the effort of the load spring on the pedals or the control stick. In the second case, when the hydraulic booster is connected in the reversible system, the hydraulic booster depending on the coefficient of irreversibility, will take only a part (in most cases a larger part) of the load originating from the control unit, whereas the other part is transmitted through the levers to the control stick or the control pedal. The latter part of the load is directly proportional to the total load originating from the control units, which enables the pilot to feel the change of strain on the control surfaces.

The hydraulic booster is fitted with a special automatic device (cross-feed valve), which turns the hydraulic booster

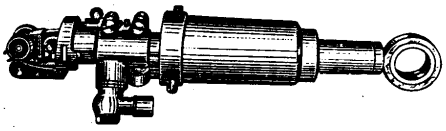

Fig. 1. Type 5Y-1Y Hydraulic Booster

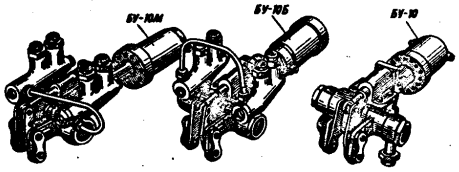

Fig. 2. Type 5Y-10 Hydraulic Booster

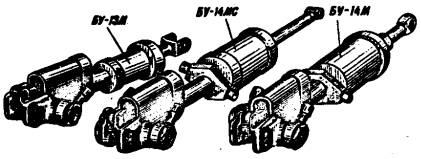

Fig. 3. Type 5Y-13M Hydraulic Booster

Declassified in Part - Sanitized Copy Approved for Release 2012/01/04 : CIA-RDP80T00246A062100120001-8

Declassified in Part - Sanitized Copy Approved for Release 2012/01/04 : CIA-RDP80T00246A062100120001-8

into an ordinary rod of the control leverage if the hydraulic system fails in operation. In this case the aircraft control is basically the same as in the case of a serviceable hydraulic booster, the only difference being that the pilot will feel a considerably greater force.

The hydraulic booster is mounted on the bracket of the aircraft or helicopter with the help of the cylinder trunnions in such a way that the booster cylinder is permitted to perform only the rocking movements.

The head of the hydraulic booster is connected to the rods linked to the control stick or control pedals, whereas the operating rod is connected with the leverage transmitting the motion of the ailerons, the elevator or the swash-plate.

II. OPERATING PRINCIPLE

Irrespective of peculiarities in the design, the operating principle of all hydraulic boosters is identical.

The hydraulic booster is essentially a two-way hydraulic power unit with a distributing device and consists of the following main elements (See Fig.4): cylinder 2, operating rod (piston) 3, and slide valve 1. The slide valve is a rod with four collars, three rows of radial ports, and with a plugged axial hole. The slide valve can be moved within certain limits relative to the operating rod. During the slide valve movement the position of the middle collars of the slide valve ensures a simultaneous symmetrical covering of channels "a" and "б" in piston 3 (See Fig.4).

As a result both cavities of cylinder 2 are disconnected simultaneously from passage "Г" between the middle collars of the slide valve which is supplied with operating fluid from the pump, and from extreme passaged "В" and "Д", which communicate with the return line.

Declassified in Part - Sanitized Copy Approved for Release 2012/01/04 : CIA-RDP80T00246A062100120001-8

Declassified in Part - Sanitized Copy Approved for Release 2012/01/04 : CIA-RDP80T00246A062100120001-8

When the slide valve disconnects both cavities of the cylinder from the delivery and return lines, it is known to be in the NEUTRAL position. The operating rod (piston) in this case remains motionless since the hydraulic fluid is either denied admission into both cavities of the cylinder, or is admitted into both cavities in equal quantities.

Aircraft control effected with the help of a hydraulic booster is based on the follow-up system, that is the magnitude and speed of ailerons or other control surfaces are in direct proportion to the magnitude and speed of the motion of the control stick or control pedals.

The hydraulic booster is connected in the leverage system of rods in series, that is the operating rod is one of the intermediate links of the leverage and the cylinder is the guide bushing of this link.

The hydraulic booster is mounted on the ball support of bracket 7 (Fig.5) which allows it to perform rocking motions in the plane of the rods rocking. Control system rod 1 running from the pedals or from the control stick is connected to the slide valve of hydraulic booster 4, whereas the rods running from the controlled units (ailerons, elevator, etc.) are linked with the operating rod.

Control of the aircraft by means of a hydraulic booster consists in the pilot's shifting the control stick or pedal in either direction, thus changing the position of the slide valve of the hydraulic booster relative to the operating rod. For example, when slide valve 1 (Fig.6) moves to the right, both collars of the slide valve also move in the same direction and channels "a" and "б" will be partially uncovered on the left side; as a result the operating fluid will be admitted in the left cavity of the cylinder through uncovered channel "б".

Under the action of the hydraulic fluid, operating rod 3 will start moving rightward relative to cylinder 2. This will force the fluid in the right cavity of the cylinder into

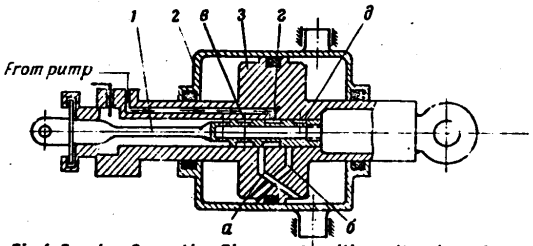

Fig.4. Booster Operation Diagram (position with aircraft control stick motionless and slide valve in neutral) 1-slide valve; 2-cylinder; 3-operating rod.

Declassified in Part - Sanitized Copy Approved for Release 2012/01/04 : CIA-RDP80T00246A062100120001-8

Declassified in Part - Sanitized Copy Approved for Release 2012/01/04 : CIA-RDP80T00246A062100120001-8

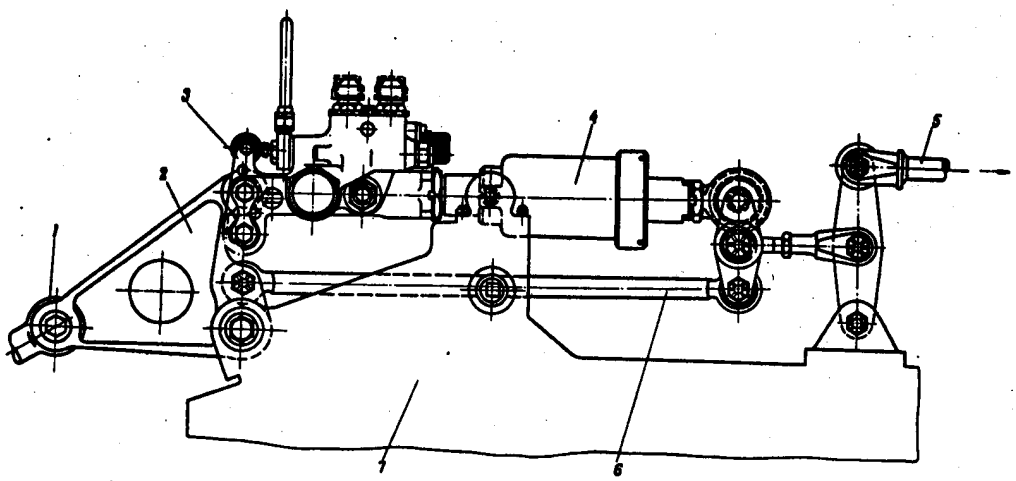

Fig.5. Installation of Hydraulic Booster in Reversible System
1-rod from control stick (pedal); 2-bell crank of control system; 3-booster bell crank; 4-hydraulic booster; 5-rod to controlled surfaces; 6-reversible rod; 7-bracket.

Declassified in Part - Sanitized Copy Approved for Release 2012/01/04 : CIA-RDP80T00246A062100120001-8

Declassified in Part - Sanitized Copy Approved for Release 2012/01/04 : CIA-RDP80T00246A062100120001-8

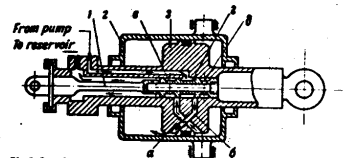

Fig.6. Booster Operation Diagram (position with aircraft control stick moving to right and slide valve shifted to right-hand position)
1-slide valve; 2-cylinder; 3-operating rod.

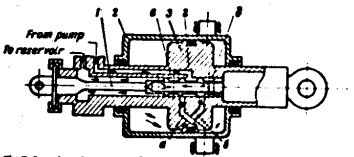

Fig.7. Booster Operation Diagram (position with aircraft control stick moving to left and slide valve in left-hand position)
1-slide valve; 2-cylinder; 3-operating rod

Declassified in Part - Sanitized Copy Approved for Release 2012/01/04 : CIA-RDP80T00246A062100120001-8

Declassified in Part - Sanitized Copy Approved for Release 2012/01/04 : CIA-RDP80T00246A062100120001-8

the inner cavity of the slide valve along channel "a" through partially uncovered passage "в" of the slide valve and further through the radial ports into the return line.

When the control stick is shifted to the left, slide valve 1 (Fig.7) will also move to the left and uncover channels "a" and "б" on the right side; as a result, the right cavity of the cylinder will be connected with the delivery line, while the left cavity - with the return line. The operating rod (piston) will move to the left.

The hydraulic fluid will be pressed out of the left-hand cavity of the cylinder along inclined channels "б" into the inner cavity of the slide valve through uncovered passage "д" and then into the return line through the radial holes.

Consequently, the hydraulic booster will allow the pilot to overcome considerable loads originating from the ailerons or elevators of the plane, as the pilot controlling the aircraft has to apply but a minor effort to overcome friction in the hinges of the control linkage before the hydraulic booster and the friction between the slide valve and sleeve walls.

As is pointed out above, the travel, speed and direction of the movement of the ailerons or elevators are directly proportional to the travel, speed and direction of motion of the control stick or pedal. Let us now consider the process in detail.

Suppose, the slide valve is shifted 0.3 mm leftward relative to the operating rod. Under the action of the hydraulic fluid the operating rod will also start moving to the left, but it will move only till it covers the ports connecting passages "г" and "д" (See Fig.7) and channels "a" and "б", that is until the slide-valve occupies the neutral position and separates passages "г" and "д" from channels "a" and "б". In other words, the operating rod similarly to the slide valve will move to the left for 0.3 mm.

Declassified in Part - Sanitized Copy Approved for Release 2012/01/04 : CIA-RDP80T00246A062100120001-8

Declassified in Part - Sanitized Copy Approved for Release 2012/01/04 : CIA-RDP80T00246A062100120001-8

If we shift the slide valve through a certain distance to the right, the operating rod will also move to the right through the same distance, and will stop automatically. The construction of hydraulic boosters permits the slide valve to move relative to the operating rod only by several tenths of a millimetre, whereas the operating rod must be moved through tens and hundreds of millimetres. Consequently, in order to shift the operating rod, say, by 25 mm to the right with the relative slide valve travel of 0.5 mm, it is necessary to make 50 shifts of the slide valve.

In practice, however, depending on the speed of motion of the control stick or pedals, the slide valve uncovers automatically the ports, which ensures a precise coordination of the operating rod speed with the speed of motion of the control rod or pedals.

Thus, with a constant speed of motion of the control stick or pedals the slide valve will shift relative to the operating rod only at the beginning of the movement, after which it will move together with the operating rod as a single unit till the pilot stops moving the control stick or changes the speed of its travel.

If the motion of the control stick or pedals is not uniform, the ports created by the slide valve will decrease or increase in accordance with the change of speed of the control stick or pedal motion. Thus, a certain speed of motion of the control stick will determine the size of the port uncovered by the slide valve. If the speed of the control stick motion increases, the ports uncovered by the slide valve automatically increase too, and vice versa.

The size of the fully opened port ensures the maximum speed of the operating rod motion under the given load.

III. TYPE БУ-10 HYDRAULIC BOOSTERS

The hydraulic diagram of operation of these boosters differs from the operation diagram described above in that the БУ-10 boosters are provided with a cross-feed system, a damping device, and a metering valve, and that they mount the distributing device on the head.

Hydraulic boosters БУ-10Б, БУ-10М, БУ-5А and БУ-8А are various modifications of the БУ-10 type. They differ from one another by certain design elements, assembly sizes and basic specifications depending on the type of aircraft or helicopter where they are installed.

Hydraulic boosters БУ-10 are installed in helicopters; two hydraulic boosters incorporated in the irreversible system of pitch-throttle control, four hydraulic boosters - in the reversible system of lateral control, and four hydraulic boosters - in the reversible system of longitudinal control.

Hydraulic boosters БУ-10СБ are also employed in helicopters; one hydraulic booster is installed in the reversible system of lateral control, one - in the reversible system of longitudinal control, and one - in the reversible system of tail rotor control.

Hydraulic booster БУ-10М is installed in helicopters in the irreversible system of pitch-throttle control.

Hydraulic booster БУ-5А is installed in aircraft in the irreversible system of ailerons control.

Hydraulic booster БУ-8А is installed in aircraft in the reversible system of elevator control.

Hydraulic boosters БУ-10Б and БУ-10М differ from hydraulic boosters БУ-10 by the presence of drain and delivery automatic valves which supply the hydraulic boosters with the operating fluid from the duplicate system if the pressure in the main line drops to 30 kg/cm^2.

Declassified in Part - Sanitized Copy Approved for Release 2012/01/04 : CIA-RDP80T00246A062100120001-8

Declassified in Part - Sanitized Copy Approved for Release 2012/01/04 : CIA-RDP80T00246A062100120001-8

Hydraulic boosters EV-10Б and EV-10M differ from each other only by the position of the cylinder relative to the piston, and by the cross-feed pipes.

Hydraulic boosters EV-5A and EV-8A differ from hydraulic boosters EV-10 by the presence of an auxiliary cross-feed valve inside the operating rod and a return valve in the fluid feed pipe connection.

Hydraulic boosters EV-5A and EV-8A are almost identical and differ from each other only by the size of the cylinder and piston, angles of the swivel nipple turn and by certain technical data.

Of all the modifications of the EV-10 type, hydraulic boosters EV-10Б and EV-10M are used most widely.

1. Basic Specifications

Characteristics	EV-5A	EV-8A	EV-10, EV-10Б, EV-10M
1	2	3	4
1. Type	Double-acting		
2. Operating principle	Hydro-mechanical		
3. Control system	Follow-up		
4. Maximum power	Not less than 3000 kg with P = 90 kg/cm^2	1900 ±100 kg. with P = 120 kg/cm^2	Not less than 750 kg with P = 60 kg/cm^2
5. Operating pressure in hydraulic booster	80 - 120 kg/cm^2	80 - 120 kg/cm^2	40 - 60 kg/cm^2
6. Operating rod travel	90.5 ±1 mm	90 ±1 mm	54 ±1 mm
7. Working travel of operating rod	86 mm (43 mm on either side of neutral position)	85 mm (46 mm to the head, 39 mm to the fork)	50 mm (25 mm on either side of the neutral position)
8. Distributing slide valve travel	2.3 - 2.6 mm	Not more than 1.9 mm	Not more than 1.9 mm

Declassified in Part - Sanitized Copy Approved for Release 2012/01/04 : CIA-RDP80T00246A062100120001-8

Declassified in Part - Sanitized Copy Approved for Release 2012/01/04 : CIA-RDP80T00246A062100120001-8

1	2	3	4
9. Distributing rod travel (at connection with aircraft bell crank)	1 - 1.2 mm	Not more than 0.85 mm	Not more than 0.85 mm
10. Dead zone of hydraulic booster:			
(a) along slide valve travel	Not more than 0.3 mm	Not more than 0.3 mm	Within 0.1 - 1 mm
(b) at connection with aircraft bell crank	Not more than 0.14 mm	Not more than 0.14 mm	Not more than 0.45 mm
11. Speed of operating rod travel under load	Not less than 80 mm/sec.		Not less than 70 mm/sec.
12. Friction and damping in distributing device (at connection with aircraft bell crank)	Not more than 2.1 kg. (a load of 2.1 kg must shift the slide valve and cause the beginning of piston motion within not more than 2 sec. from the extreme right position)		
13. Operating rod friction with hydraulic system switched off	Not more than 12 kg	Not more than 12 kg.	Not more than 12 kg
14. Hydraulic booster weight	Not more than 5.8 kg	Not more than 4.8 kg	БУ-10Б and БУ-10М: not more than 5.1 kg, БУ-10: not more

1	2	3	4
15. Operating fluid	АМГ-10	АМГ-10	АМГ-10
16. Operating temperature range (during hydraulic booster operation)	±60°C	±60°C	±60°C
17. Guaranteed service life	200 flying hours during 4 - 5 years	200 flying hours during 4 - 5 years	300 flying hours during 4 - 5 years

Declassified in Part - Sanitized Copy Approved for Release 2012/01/04 : CIA-RDP80T00246A062100120001-8

Declassified in Part - Sanitized Copy Approved for Release 2012/01/04 : CIA-RDP80T00246A062100120001-8

2. Operating Principle of БУ-10Б and БУ-10М Hydraulic Boosters

The distributing device of hydraulic boosters БУ-10Б and БУ-10М is mounted inside the booster head and is essentially a slide valve (plunger) with four collars.

The operating fluid is supplied under pressure into the recess between the middle collars. When the slide valve is in the neutral position, the middle collars cover the cylinder delivery and return channels, thus locking the operating fluid in both cylinder cavities.

When the distributing slide valve moves in either direction from the neutral position, the channels become uncovered and the operating fluid is forced into one of the cavities of the cylinder and out of the other cavity into the return line.

The damping device provided to ensure uniform operation of the slide valve protects the latter from vibrations that are likely to arise in the system.

The hydraulic booster head accommodates metering valve 6 (Fig.8) which ensures smooth and uniform motion of the operating rod under load.

At the moment when the pressure in both cavities of the cylinder is balanced and the metering valve occupies a neutral position, the sealing band of the plunger cuts off the operating fluid supply.

If the pressure difference in the cylinder cavities is equal to or above 5 - 6 kg/cm^2, the plunger of the metering valve sends the operating fluid into the cavity with a higher pressure.

The hydraulic boosters are provided with an emergency cross-feed system of cylinder cavities and a locking device which are set in operation if the pressure in the hydraulic

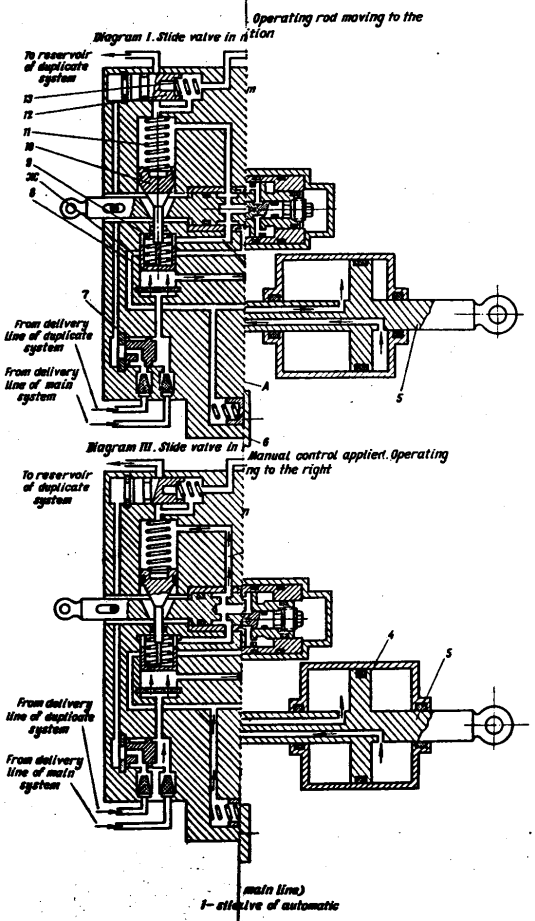

Declassified in Part - Sanitized Copy Approved for Release 2012/01/04 : CIA-RDP80T00246A062100120001-8

Declassified in Part - Sanitized Copy Approved for Release 2012/01/04 : CIA-RDP80T00246A062100120001-8

oosters

osters БУ-10Б
ad and is
r collars.
ressure into
the slide valve
rs cover the
locking the

in either
nels become
into one of the
cavity into

iform operation
ibrations that

metering valve 6
on of the operat-

cavities of the
coupies a neutral
off the operat-

r cavities is
of the metering
y with a higher

an emergency
locking device
the hydraulic

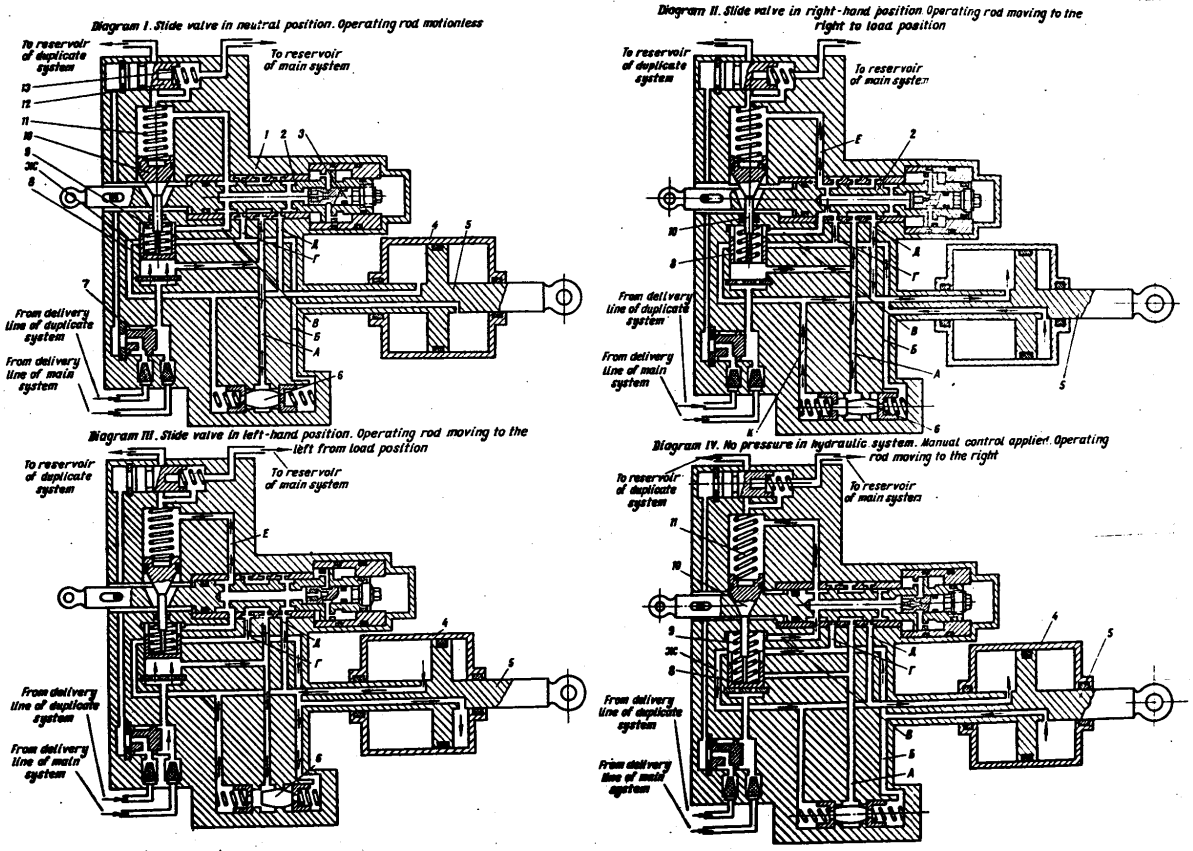

Fig.8. БУ-10Б and БУ-10А Hydraulic Boosters. Operation Diagram (position with operating fluid supplied from main line)
1– slide valve body; 2–slide valve; 3–needle of damping device; 4–cylinder; 5–operating rod; 6–metering valve; 7– slide valve of automatic delivery valve; 8–plunger; 9, 11 and 13–springs; 10–stop; 12–slide valve of automatic drain valve.

Declassified in Part - Sanitized Copy Approved for Release 2012/01/04 : CIA-RDP80T00246A062100120001-8

Declassified in Part - Sanitized Copy Approved for Release 2012/01/04 : CIA-RDP80T00246A062100120001-8

system drops to zero. The locking device in this case prevents the possibility of the slide valve motion relative to the operating rod, otherwise it would result in the control stick or pedals switching over to idle motion.

Fig.8 illustrates the operation diagram of a hydraulic booster supplied from the main hydraulic system with different positions of the slide valve (distributing rod).

The operating fluid from the hydraulic system pump is supplied through the inlet pipe connection filter and the automatic delivery valve (АКП) to plunger 8 which moves upward and disconnects channels Б and Ж communicating with the cylinder cavities. At the same time plunger 8 shifts up stop 10 and opens channel А. The operating fluid is forced through channel А to the middle recess of the slide valve and to metering valve 6.

When stop 10 moves up, the clearance in the taper connection of the slide valve and the stop that appears as a result of the stop motion permits the slide valve to shift relative to the operating rod for 1.9 mm.

D i a g r a m I (See Fig.8) shows slide valve 2 in the neutral position; the middle collars of the slide valve cover channels Д and Г, the operating fluid is prevented from entering the cavities of cylinder 4, and operating rod 5 is motionless. So is metering valve 6.

D i a g r a m II shows slide valve 2 right of the neutral position; channel Д connects the left cavity of cylinder 4 with the middle recess of the slide valve, while channel Г connects the right cavity of the cylinder with the extreme left recess of the slide valve and, through channel Е, with the return line.

The operating fluid is forced under pressure from the middle recess through channel Д into the left cavity of the cylinder and shifts the operating rod to the right of the neutral position. The operating fluid in the right cavity

Declassified in Part - Sanitized Copy Approved for Release 2012/01/04 : CIA-RDP80T00246A062100120001-8

Declassified in Part - Sanitized Copy Approved for Release 2012/01/04 : CIA-RDP80T00246A062100120001-8

is forced out of the cylinder into the main hydraulic system reservoir through channels В and Г, left recess of the slide valve, channel Е and the automatic drain valve.

Due to a pressure difference in the working cavities of the cylinder, the metering valve moves rightward in the direction of a lower pressure. The left cavity of the cylinder communicates with channel А through channel К, which permits additional quantities of the operating fluid to enter the left cavity from the delivery line, by-passing the distributing device.

In diagram III the slide valve is shifted to the left of the neutral position; channel Г connects the right cavity of the cylinder with the middle recess of the slide valve, whereas channel Д connects the left cavity of the cylinder with the right extreme recess of the slide valve, with channel Е and with the return line.

The operating fluid is forced under pressure from the middle recess of the slide valve through channel Г into the right cavity of the cylinder and shifts the operating rod to the left of the neutral position (load relief).

The operating fluid in the left cavity is forced out of the cylinder into the main hydraulic system reservoir through channel Д, the recess and the hole in the slide valve, channel Е and the automatic drain valve.

During the leftward motion of the operating rod to its middle position the pressure in the left cylinder cavity will exceed that in the right cavity. This excess pressure in the left cavity of the cylinder balances the total load resulting from the operating fluid pressure and the load transmitted from the control surfaces. Therefore, similarly to the previous case, the metering valve is shifted to the right, and the left cavity of the cylinder communicates directly with the delivery line. When the operating rod passes the middle position, that is when it starts moving leftward to build up load,

the metering valve will also shift to the left and connect the right cavity directly with the delivery line.

Diagram IV illustrates the case when the control is effected mechanically (manually) by means of the control stick or control pedals. The necessity to operate control surfaces mechanically will arise if there is no pressure in the hydraulic system. In this case the control surfaces are deflected by the physical effort of the pilot which is applied to the control stick or pedals and is transmitted through a system of rods.

Operating rod 5 functions as one of the rods in the control system. The play of the distributing slide valve, and, consequently, the idle motion of the control stick or pedals is eliminated by stop 10.

If the pressure in the hydraulic system drops to 15^{+5} kg/cm^2, spring 11 will force stop 10 to move down. As a result, the play in the taper connection of the slide valve and the stop will be taken up and the slide valve will be prevented from moving relative to the piston. At the same time plunger 8 under the action of spring 9 will move down and will open channels Б and Ж, thus ensuring a free flow of the operating fluid from one cylinder cavity to the other and the removal of the excess fluid from both cavities into the return line through channel В.

Fig.9 illustrates the operation diagram of hydraulic boosters БУ-10Б and БУ-10М when the operating fluid is supplied to the hydraulic booster from the duplicate system.

In this case the operation of the hydraulic boosters is the same as in the case of supply from the main system. The pump of the duplicate system, with the main system under pressure, runs idle and delivers the operating fluid to the duplicate system reservoir.

If the pressure in the main system drops below 30 kg/cm^2, the ГА-59 hydraulic unit and the automatic drain and delivery

Declassified in Part - Sanitized Copy Approved for Release 2012/01/04 : CIA-RDP80T00246A062100120001-8

Declassified in Part - Sanitized Copy Approved for Release 2012/01/04 : CIA-RDP80T00246A062100120001-8

valves cut the hydraulic booster out of the main system and connect it to the duplicate system, with a result that the pressure in the duplicate system rises to 60 kg/cm^2. The operating fluid from the duplicate system pump flows through the filter in the pipe connection and the hole in slide valve 7 of the automatic delivery valve into cavity Д connected with cavity М through channel К. Under the action of the working pressure in cavities Д and М, slide valves 7 and 12 are shifted to the extreme right position and cut off the supply of the operating fluid into the hydraulic booster and the return of the operating fluid into the main system, and connect the hydraulic booster with the supply and return lines of the duplicate system.

When the pressure in the main system rises to 60 kg/cm^2, the pump of the duplicate system is automatically switched to the idle operation. Under the action of the working pressure slide valve 7 of the automatic delivery valve will be shifted to the left, thus disconnecting the hydraulic booster supply line from the duplicate system and connecting it with the main system. Spring 13 will shift slide valve 12 of the automatic drain valve to the left, disconnecting the return line of the hydraulic booster from the duplicate system and connecting it with the main line.

3. Operating Principle of БУ-10 Hydraulic Boosters

Hydraulic boosters БУ-10 (Fig.10) differ from the БУ-10Б and БУ-10М modifications by the absence of automatic valves for switching over the booster to the duplicate system.

In БУ-10 hydraulic boosters the operating fluid is supplied from the pump to the swivel nipple instead of the pipe connection of the automatic delivery valve. Otherwise,

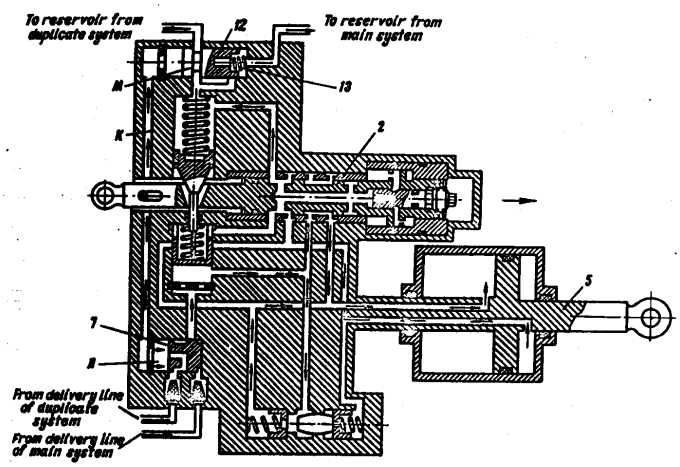

Fig.9. БУ-10Б and БУ-10М Hydraulic Boosters. Operation Diagram (position with operating fluid supplied from duplicate system)
2 – slide valve; 5 – operating rod; 7 – slide valve of automatic delivery valve; 12 – slide valve of automatic drain valve; 13 – spring.

Declassified in Part - Sanitized Copy Approved for Release 2012/01/04 : CIA-RDP80T00246A062100120001-8

Declassified in Part - Sanitized Copy Approved for Release 2012/01/04 : CIA-RDP80T00246A062100120001-8

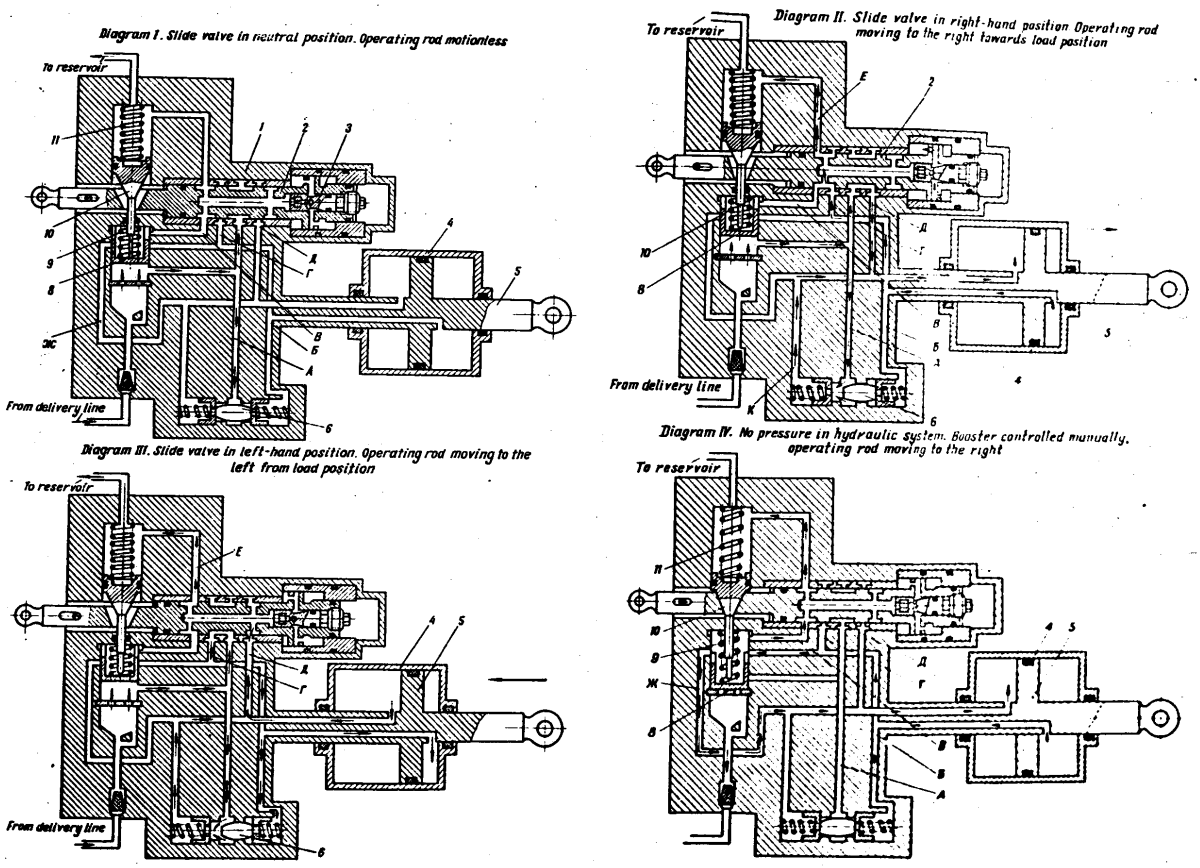

Fig. 10. БУ-10 Hydraulic Booster. Operation Diagram (with Slide Valve in Different Positions) For References See Fig 8

Declassified in Part - Sanitized Copy Approved for Release 2012/01/04 : CIA-RDP80T00246A062100120001-8

Declassified in Part - Sanitized Copy Approved for Release 2012/01/04 : CIA-RDP80T00246A062100120001-8

the operation diagram of БУ-10 hydraulic boosters is identical with that of БУ-10Б and БУ-10М boosters (See Fig.8).

4. Operating Principle of БУ-5А and БУ-8А Hydraulic Boosters

Hydraulic boosters БУ-5А and БУ-8А differ from hydraulic boosters БУ-10Б and БУ-10М by the absence of automatic valves for switching over to the duplicate system. In these boosters the operating fluid is supplied from the pump to the swivel nipple instead of the automatic delivery valve pipe connections. Besides, the hydraulic diagram of these boosters differs by the presence of additional cross-feed valve 14 (Fig.11). Otherwise, the hydraulic diagram is identical with that of hydraulic boosters БУ-10Б and БУ-10М. The latter modifications differ from each other only by certain parameters and by overall dimensions.

5. Description of БУ-10 Booster Design

Fig.12 illustrates the external view of hydraulic boosters БУ-10Б. The assembly drawing is presented in Fig.13, while the external view of individual units and parts is presented in Fig.14.

Hydraulic booster БУ-10Б includes head 1 (See Fig.14), piston 2, cylinder 3 and other units and parts which serve for connection of the hydraulic booster with the rods of the control system and with the aircraft hydraulic system.

The head incorporates the distributing and damping devices, the cross-feed system, the metering valve, the filter and serves also for connecting control levers.

The head unit includes slide valve 1 (Fig.15), hinge 2, bell crank 3, automatic delivery valve 4 and automatic drain valve 5.

Declassified in Part - Sanitized Copy Approved for Release 2012/01/04 : CIA-RDP80T00246A062100120001-8

Declassified in Part - Sanitized Copy Approved for Release 2012/01/04 : CIA-RDP80T00246A062100120001-8

The slide valve unit is mounted on the body of the head and consists of slide valve body 1 (Fig.16), sleeve 2, slide valve 3 and the damping device.

Slide valve body 1 is a steel forging with press-fitted sleeve 2 which is a hollow bushing. On its outer surface the sleeve has four annular grooves. Milled in two grooves are two rectangular ports machined and finished to very close tolerances. Two other grooves have four drilled holes each.

The sleeve accommodates distributing slide valve 3 with the damping device.

Distributing slide valve 3 is a hollow rod with three recesses on its outer surface which form two service collars. The linear sizes of the collars are accurate within 0.02 mm.

When the slide valve is in the neutral position, the service collars cover both ports in the sleeve simultaneously and symmetrically, and when the slide valve moves aside, they open both ports simultaneously. The mating surfaces of the slide valve and sleeve are machined to the tenth class of precision.

The right end of the slide valve is provided with a shoulder, 20 mm in dia., which serves as piston of the damping device. The damping device consists of the piston (the larger shoulder of the slide valve) and two damping cavities "a" and "в" which are formed by the slide valve body and the damper piston.

The body of damper 4 is secured to the slide valve body by means of four screws. The sealing between the damper body and the slide valve body is ensured with two sealing rings 5 inserted into the grooves on the outer surface of the damper body.

The needle unit is mounted in the slide valve recess. The outer surface of needle 7 is bevelled.

The damping cavities are interconnected by means of radial channels "б" and "г" in the damper piston and a taper

Diagram I. Slide valve in neutral position. Operating rod moving to the right position

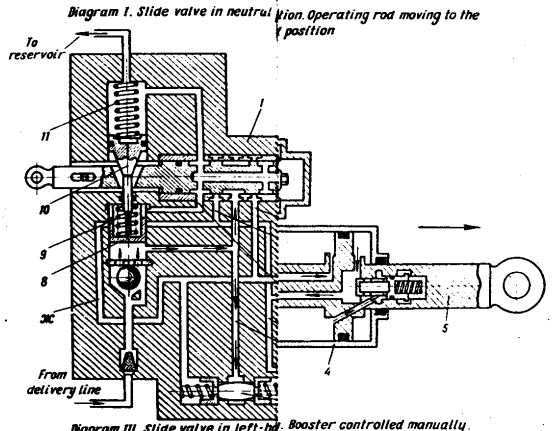

Diagram III. Slide valve in left-hand position. Booster controlled manually left from the right to the right

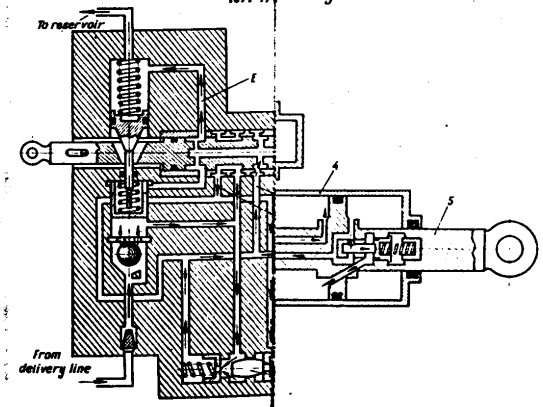

Declassified in Part - Sanitized Copy Approved for Release 2012/01/04 : CIA-RDP80T00246A062100120001-8

Declassified in Part - Sanitized Copy Approved for Release 2012/01/04 : CIA-RDP80T00246A062100120001-8

mounted on the body of the head
ody 1 (Fig.16), sleeve 2, slide
e.
steel forging with press-fitted
shing. On its outer surface the
es. Milled in two grooves are
d and finished to very close
have four drilled holes each.
distributing slide valve 3 with

3 is a hollow rod with three
which form two service collars.
s are accurate within 0.02 mm.
n the neutral position, the
ts in the sleeve simultaneously
e slide valve moves aside, they
. The mating surfaces of the
hined to the tenth class of

e valve is provided with a
serves as piston of the damping
sists of the piston (the larger
nd two damping cavities "a"
he slide valve body and the

oured to the slide valve body
ealing between the damper body
sured with two sealing rings 5
he outer surface of the damper

in the slide valve recess.
s bevelled.
interconnected by means of
n the damper piston and a taper

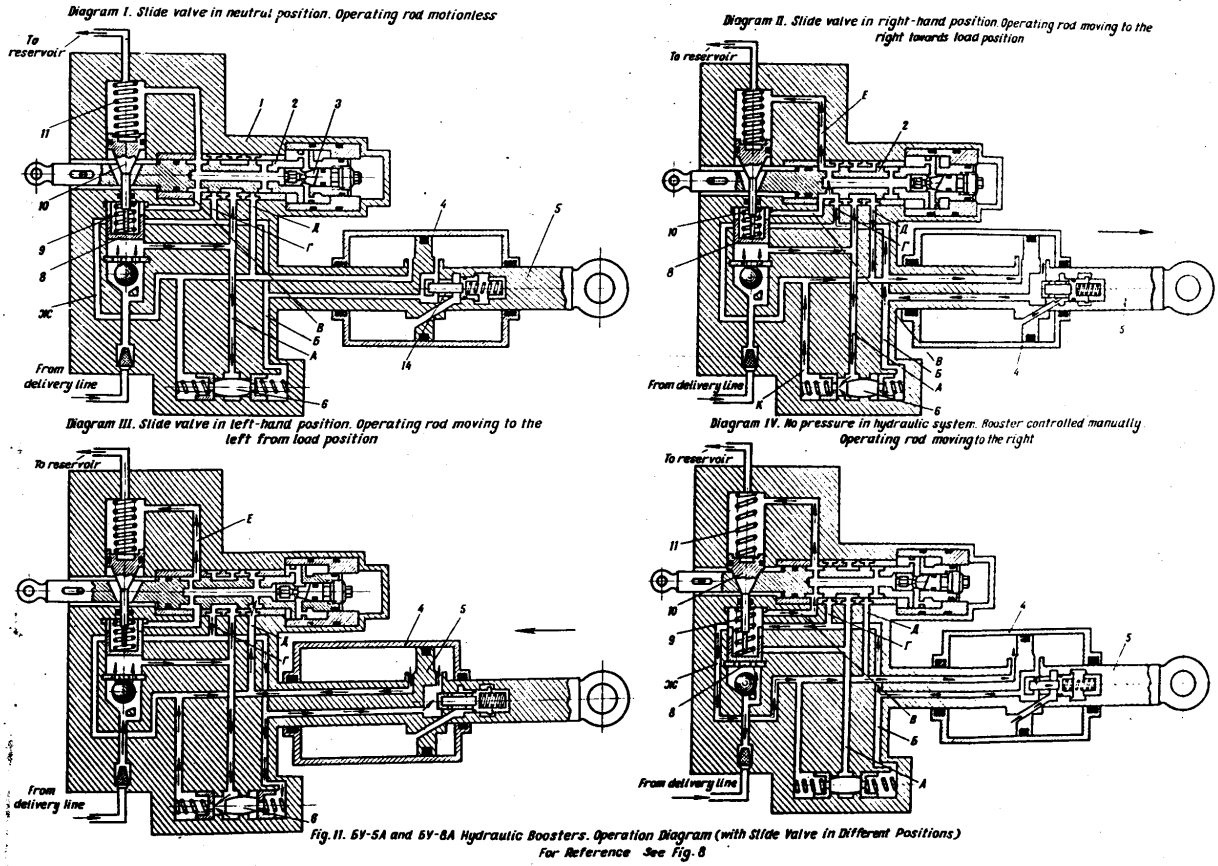

Fig. 11. 6V-5A and 6V-8A Hydraulic Boosters. Operation Diagram (with Slide Valve in Different Positions)
For Reference See Fig. 8
14 - additional cross-feed valve

Declassified in Part - Sanitized Copy Approved for Release 2012/01/04 : CIA-RDP80T00246A062100120001-8

Declassified in Part - Sanitized Copy Approved for Release 2012/01/04 : CIA-RDP80T00246A062100120001-8

and
val

sle
sle
two
to:

the

rec
The

ser
and
ope
sl:
pre

sh
de
sh
an
da

by
an
in
bo

The

rac

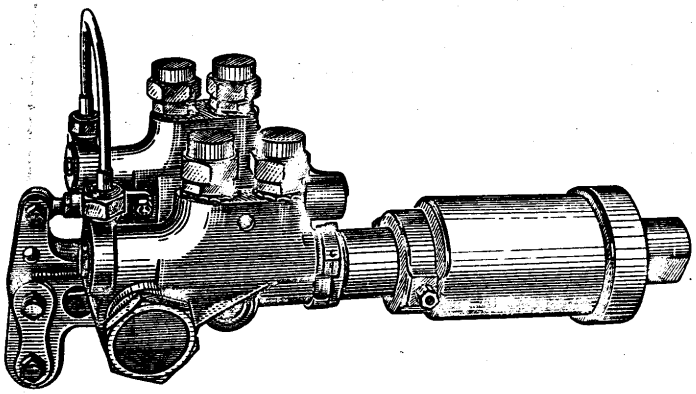

Fig.12. БУ-10Б Hydraulic Booster. External View

Declassified in Part - Sanitized Copy Approved for Release 2012/01/04 : CIA-RDP80T00246A062100120001-8

Declassified in Part - Sanitized Copy Approved for Release 2012/01/04 : CIA-RDP80T00246A062100120001-8

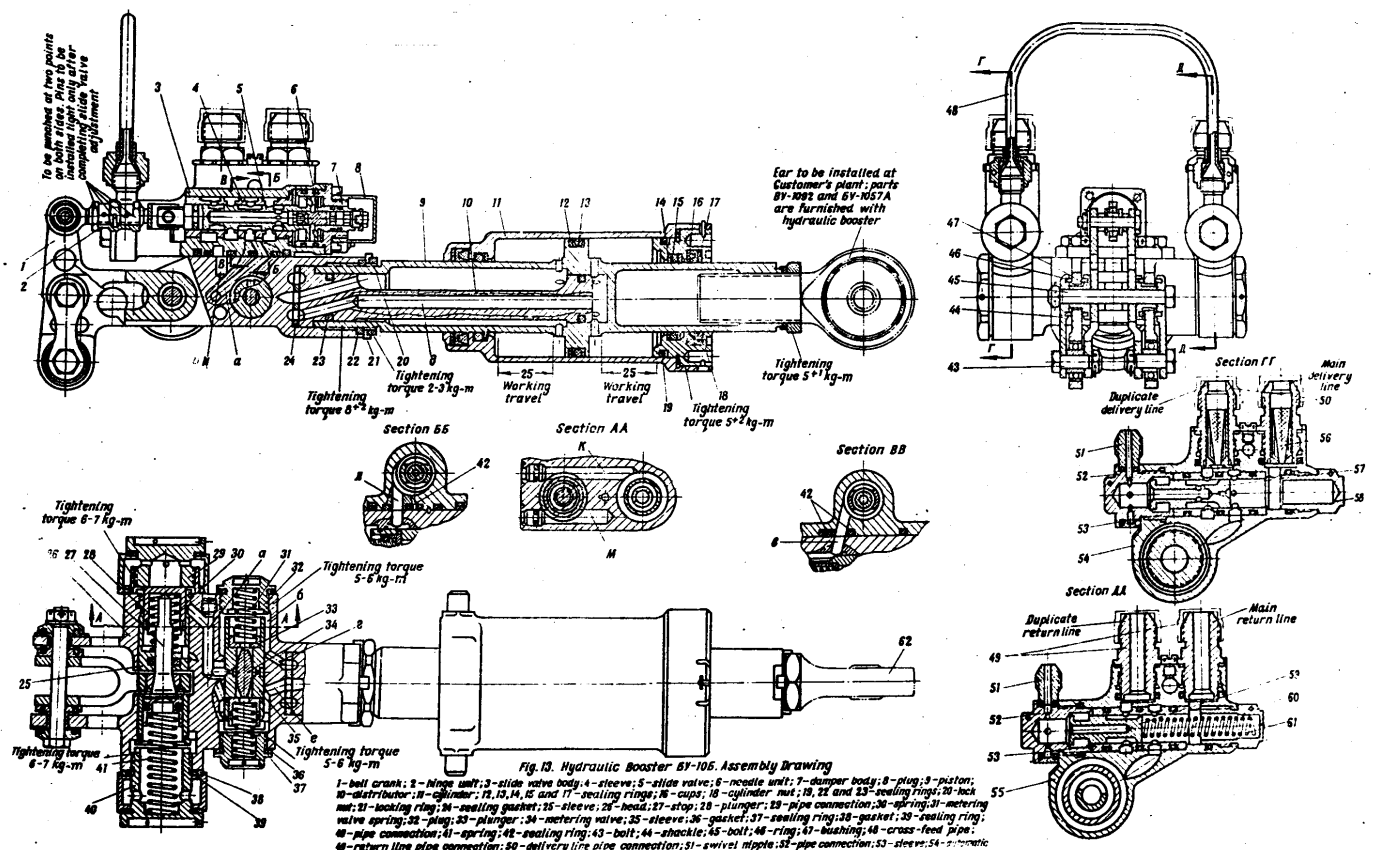

Fig. 13. Hydraulic Booster BY-106. Assembly Drawing

1 - bell crank; 2 - hinge unit; 3 - slide valve body; 4 - sleeve; 5 - slide valve; 6 - needle unit; 7 - damper body; 8 - plug; 9 - piston; 10 - distributor; 11 - cylinder; 12, 13, 14, 15 and 17 - sealing rings; 16 - cups; 18 - cylinder nut; 19, 22 and 23 - sealing rings; 20 - lock nut; 21 - locking ring; 24 - sealing gasket; 25 - sleeve; 26 - head; 27 - stop; 28 - plunger; 29 - pipe connection; 30 - spring; 31 - metering valve spring; 32 - plug; 33 - plunger; 34 - metering valve; 35 - sleeve; 36 - gasket; 37 - sealing ring; 38 - gasket; 39 - sealing ring; 40 - pipe connection; 41 - spring; 42 - sealing ring; 43 - bolt; 44 - shackle; 45 - bolt; 46 - ring; 47 - bushing; 48 - cross-feed pipe; 49 - return line pipe connection; 50 - delivery line pipe connection; 51 - swivel nipple; 52 - pipe connection; 53 - sleeve; 54 - automatic delivery valve body (AKH); 55 - automatic drain valve body (AKC); 56 - filter; 57 - delivery slide valve; 58 - plug; 59 - [illegible] 50 - plug; 61 - spring; 62 - end-piece.

Declassified in Part - Sanitized Copy Approved for Release 2012/01/04 : CIA-RDP80T00246A062100120001-8

Declassified in Part - Sanitized Copy Approved for Release 2012/01/04 : CIA-RDP80T00246A062100120001-8

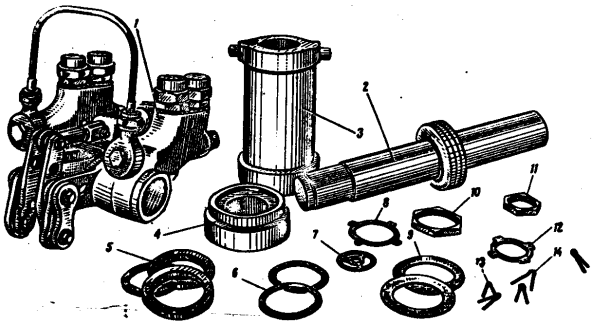

Fig.14. Units and Parts of Hydraulic Booster БУ-105
1 – head unit; 2 – piston unit; 3 – cylinder; 4 – cylinder bushing; 5 – cups; 6 and 9 – leather rings; 7 – gasket; 8 and 12 – locking rings; 10 – lock nut; 11 – nut; 13 and 14 – cotter pins.

Declassified in Part - Sanitized Copy Approved for Release 2012/01/04 : CIA-RDP80T00246A062100120001-8

Declassified in Part - Sanitized Copy Approved for Release 2012/01/04 : CIA-RDP80T00246A062100120001-8

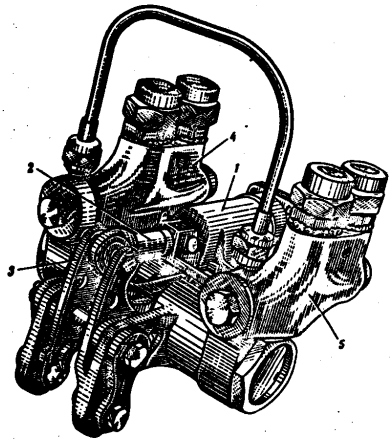

Fig. 15. Booster Head

1—slide valve; 2—hinge; 3—bell crank; 4—automatic delivery valve; 6—automatic drain valve.

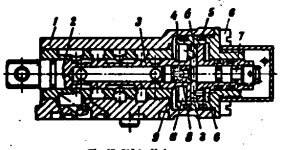

Fig. 16. Slide Valve

1—slide valve body; 2—sleeve; 3—slide valve; 4—damper body; 5—sealing rings; 6—screws; 7—needle; 8—ball; 9—plug.

Declassified in Part - Sanitized Copy Approved for Release 2012/01/04 : CIA-RDP80T00246A062100120001-8

Declassified in Part - Sanitized Copy Approved for Release 2012/01/04 : CIA-RDP80T00246A062100120001-8

passage. The damping cavities are filled with fluid through a return valve mounted in the butt end of the needle and consisting of ball 8 and plug 9.

The damper adjustment consists in changing the clear opening of the channel connecting both damper cavities by turning the needle in or out. Upon completion of adjustment the needle position is fixed with a cotter pin passing through the slots on the end face of the slide valve and the holes in the needle.

The left end of the distributing slide valve terminates in a shank by means of which the slide valve unit is hinged to the bell crank unit.

Bell crank 1 (See Fig.13) linked with control surfaces by means of bolt 45 can rock around the axis of bolts 43 imparting reciprocal motion to the slide valve relative to the sleeve. The slide valve travel is made possible by the clearances between bushings 47 and head 26.

The rods running from the control stick or control pedals of the aircraft are connected by means of bolt 45 to the middle of the bell crank which ensures the aircraft rods and slide valve ratio of approximately 1:1 at the place of connection, i.e. a certain motion of the aircraft rod at the point of connection to the bell crank will cause the slide valve to move a double distance. This ensures a large overlap of the slide valve with a minimum idle travel of control system elements.

The slide valve moves only if there is pressure in the hydraulic system. If the pressure is absent, the stop fits tightly with its tapered section into the taper hole in the middle projection of the bell crank as a result of which the bell crank and consequently the slide valve are fixed in the neutral position relative to the head. In this case the effort from the control stick or control pedals will be transmitted through the bell crank, the stop and the head directly to the operating rod.

Declassified in Part - Sanitized Copy Approved for Release 2012/01/04 : CIA-RDP80T00246A062100120001-8

Declassified in Part - Sanitized Copy Approved for Release 2012/01/04 : CIA-RDP80T00246A062100120001-8

The head unit has a complicated geometrical shape. Mounted in head 1 (Fig.17) are stop 2 with plunger 3 and springs 4 and 11, plungers 6 and 9 and metering valve springs.

If the hydraulic system is cut off, stop 2 (See Fig.17) moves under the action of spring 11 and locates bell crank 12 taking up the backlash (travel) of the slide valve. If there is no pressure in the hydraulic system, springs 4 and 11 shift plunger 3 in the upper position and ensure the connection of the cylinder cavities with each other and with the return line.

The metering valve (ДК) consists of plungers 6 and 9 and springs 7. The operating fluid is supplied to the butt ends of plunger 9 from both cavities of the cylinder.

A difference of pressure in the cylinder cavities causes plunger 9 to move relative to the recess connected with the delivery line. As a result, the valve by-passes the hydraulic fluid into the corresponding cavity of the cylinder through the flats of plunger 9.

The difference of hydraulic fluid pressure in the cylinder cavities determines the length of the plunger travel, that is the size of passage for an additional supply of the fluid into the cylinder.

The cavities of the ДК metering valve are closed at the faces with pipe connections 8. The joints between the head body and the pipe connections are sealed by rubber sealing rings inserted into the pipe connection grooves, and by aluminium washers.

Head 1 (See Fig.13) is connected with the piston unit through a thread joint which is packed by aluminium washer 24 and rubber ring 22.

The piston unit is a power element which transmits the effort built up by the operating fluid pressure to the controlled units through a system of levers.

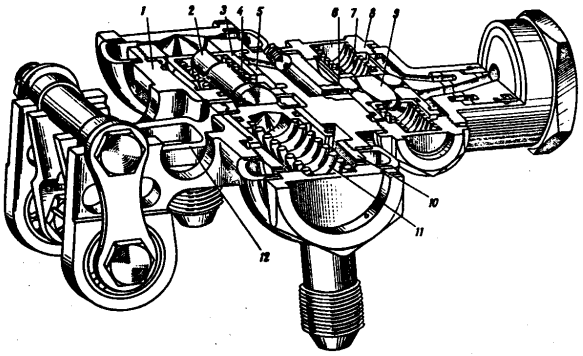

Fig. 17. Booster Head Longitudinal Section
1-head; 2-stop; 3-plunger; 4-spring; 5-sleeve; 6-plunger; 7-metering valve spring; 10-pipe connection; 11-spring; 12-bell crank.

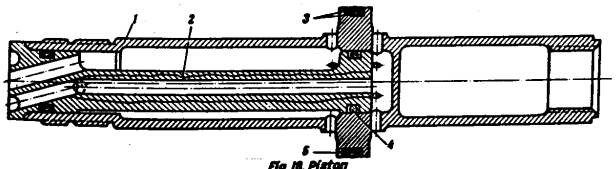

Fig. 18. Piston
1-piston; 2-distributor; 3-leather rings; 4 and 5 - sealing rings.

Declassified in Part - Sanitized Copy Approved for Release 2012/01/04 : CIA-RDP80T00246A062100120001-8

Declassified in Part - Sanitized Copy Approved for Release 2012/01/04 : CIA-RDP80T00246A062100120001-8

Piston 1 (Fig.18) is a hollow rod with a bulged portion in the middle which is known as the piston head. The groove in the piston head accommodates rubber ring 5 and two leather rings 3 which separate the cylinder cavities.

The surfaces of the piston rods are machined and finished to very close tolerances. To improve the wear-resistant and anti-corrosive qualities of the rod, its surfaces are chrome-plated.

On the side of the head unit the piston cavity houses distributor 2 which permits each of the service collars of the slide valve to supply the hydraulic fluid or to return it from the corresponding cavity of the cylinder.

Distributor 2 is a duralumin rod with longitudinal and oblique ports.

The tightness of the distributor-to-piston joint is ensured by rubber sealing rings 4 (of a round section) which are inserted into special grooves on the external surface of the distributor.

Ear 62 (See Fig.13) is screwed into the other end of the piston. The ear serves to link the hydraulic boosters with the rods connected with the control units.

The piston unit is located in cylinder 11 which is a three-step bushing with two trunnion pins the outer surface which serve for the installation of the hydraulic booster on the ball supports of the aircraft bracket.

The working surfaces of the cylinder are machined and finished to close tolerances. The cylinder bore of the smaller diameter is a guide for the operating rod.

The cylinder bore of the larger diameter receives cylinder nut 18 whose inner hole also serves as a guide for the operating rod.

The necessary tightness is ensured by two packing units inserted into the cylinder and nut grooves; one of the units consists of a gland, tongued cup 16 and leather ring 17, while

Declassified in Part - Sanitized Copy Approved for Release 2012/01/04 : CIA-RDP80T00246A062100120001-8

Declassified in Part - Sanitized Copy Approved for Release 2012/01/04 : CIA-RDP80T00246A062100120001-8

the other unit includes round rubber ring 15 and two leather rings 14.

The hydraulic fluid is supplied to and returned from the hydraulic booster through flexible hoses which are connected with the head through an automatic delivery valve (АКП) and automatic drain valve (АКС).

The necessary tightness of the joints between the valves and the hydraulic booster head, as well as between the valves and pipe connections 29 and 40, is ensured by rubber sealing rings 39 and aluminium gaskets 38.

An additional cleaning of the hydraulic fluid is done by screen filters 56 mounted in pipe connections 50 of the automatic delivery valve.

The hydraulic fluid is supplied under pressure to plunger 28 through automatic delivery valve pipe connection 50 and pipe connection 29 and presses off the plunger together with stop 27, thus opening access to channel "а".

Through channel "а" the hydraulic fluid is fed to the middle recess of slide valve 5 and to metering valve 34.

When the slide valve shifts to the left, the hydraulic fluid through channel "в" and metering valve cavity "б" is delivered into channel "г" running to distributor 10 and through channel "д" to the right cavity of the cylinder.

The operating fluid is pressed out of the left cavity of the cylinder through the cavity between the distributor and the piston rod into channel "е", the recess of the metering valve and channel "а" to the slide valve, and further through the holes in the slide valve and channel "ж" to the return line.

When the slide valve shifts to the right, the hydraulic fluid is forced into the left cavity of the cylinder and driven out of the right cavity. The cross feed of the cylinder cavities is ensured through channels "к" and "м", and connection of the cavity with the return line - through channel "ж".

The automatic delivery and drain valves are identical in construction and differ from each other by the presence of a spring in the drain valve, the presence of filters in the delivery valve pipe connections and by the slide valve design.

The automatic delivery and drain valves consist of bodies 1 (Figs19 and 20), sleeves 2 with rubber seals around the outer diameter and slide valves 3.

The delivery and drain slide valves have three collars each; two of them serve to distribute the operating fluid, whereas the third one is the slide valve travel limiter. In the automatic drain valve, if there is no pressure supplied from the main hydraulic system, the slide valve is held by means of a spring in the extreme left position. In this case the hydraulic booster is connected with the return line of the main hydraulic system.

The threaded holes of the bodies receive plugs 8 and pipe connections 11. Swivel nipples 12 fitted on the pipe connections are joined by a pipe which supplies the operating fluid from the delivery line of the duplicate system for switching over the drain slide valve to the right position. In this position the hydraulic booster is connected with the return line of the duplicate system.

The pipe lines of the main and duplicate systems are connected to the pipe connections screwed into the bodies of the automatic delivery and drain valves.

Pipe connections 4 (See Fig.19) of the automatic delivery valve carry screen filters 6 for an additional cleaning of the operating fluid.

<u>Hydraulic booster БУ-10М</u> (Fig.21) differs from the БУ-10Б modification by the shape of cross-feed pipe 48 (Fig.22) and by the position of cylinder 11 relative to head 26.

Declassified in Part - Sanitized Copy Approved for Release 2012/01/04 : CIA-RDP80T00246A062100120001-8

Declassified in Part - Sanitized Copy Approved for Release 2012/01/04 : CIA-RDP80T00246A062100120001-8

Hydraulic booster БУ-10 (Fig.23) differs from hydraulic booster БУ-10Б in that it has no automatic delivery and drain valves.

The operating fluid is supplied to, and returned from, the hydraulic booster БУ-10 through flexible hoses connected to the head by means of nipples 51 and 49 (Fig.24).

Hydraulic boosters БУ-5А and БУ-8А (Fig.25) differ from hydraulic boosters БУ-10 by the presence of an additional cross-feed valve and a return valve in the fluid-feed pipe connection, and by the construction of the distributing rod slide valve which has no flats on the collars (to improve speed characteristics).

The additional cross-feed valve is located in a special recess of the piston and consists of plunger 18 (Figs 26 and 27), spring 17 and plug 16.

If there is no pressure in both cavities of the cylinder, the spring shifts plunger 18 into the extreme left position, and the cylinder cavities communicate with each other.

The delivery of the operating fluid under pressure into one of the cavities of the cylinder causes plunger 18 to move to the extreme right position and to disconnect the cylinder cavities.

Plug 16 is screwed into the piston opening and is locked with a spring ring.

Return valve ball 52 mounted in fluid-feed pipe connection 40 serves for damping the operating fluid forced out through throttle hole "K" in case of a sudden drop of pressure in the delivery line; this weakens the shock on the control stick and ensures a more smooth transition to the manual control during the hydraulic booster operation under load.

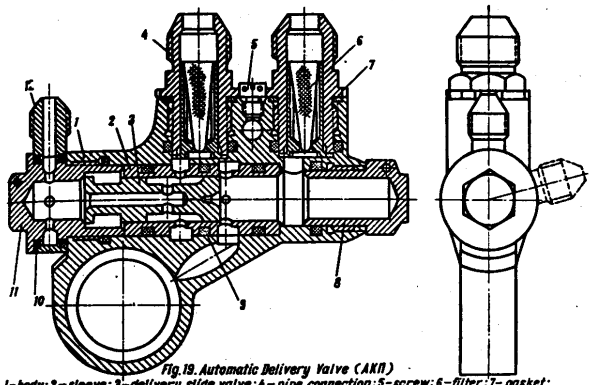

Fig.19. Automatic Delivery Valve (АКП)
1-body; 2-sleeve; 3-delivery slide valve; 4-pipe connection; 5-screw; 6-filter; 7-gasket; 8-plug; 9 and 10-sealing rings; 11-pipe connection; 12-swivel nipple.

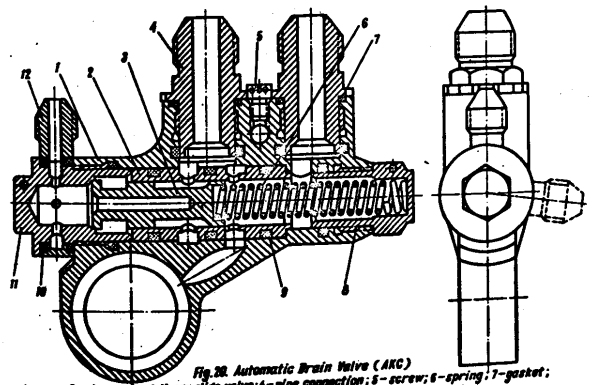

Fig.20. Automatic Drain Valve (АКС)
1-sleeve; 3-delivery slide valve; 4-pipe connection; 5-screw; 6-spring; 7-gasket; 8-plug; 9 and 10-sealing rings; 11-pipe connection; 12-swivel nipple.

Declassified in Part - Sanitized Copy Approved for Release 2012/01/04 : CIA-RDP80T00246A062100120001-8

Declassified in Part - Sanitized Copy Approved for Release 2012/01/04 : CIA-RDP80T00246A062100120001-8

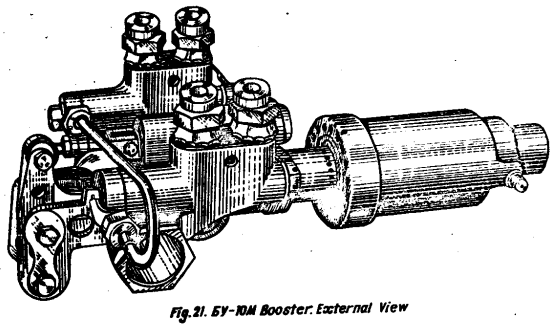

Fig. 21. 5V-10M Booster. External View

Declassified in Part - Sanitized Copy Approved for Release 2012/01/04 : CIA-RDP80T00246A062100120001-8

Declassified in Part - Sanitized Copy Approved for Release 2012/01/04 : CIA-RDP80T00246A062100120001-8

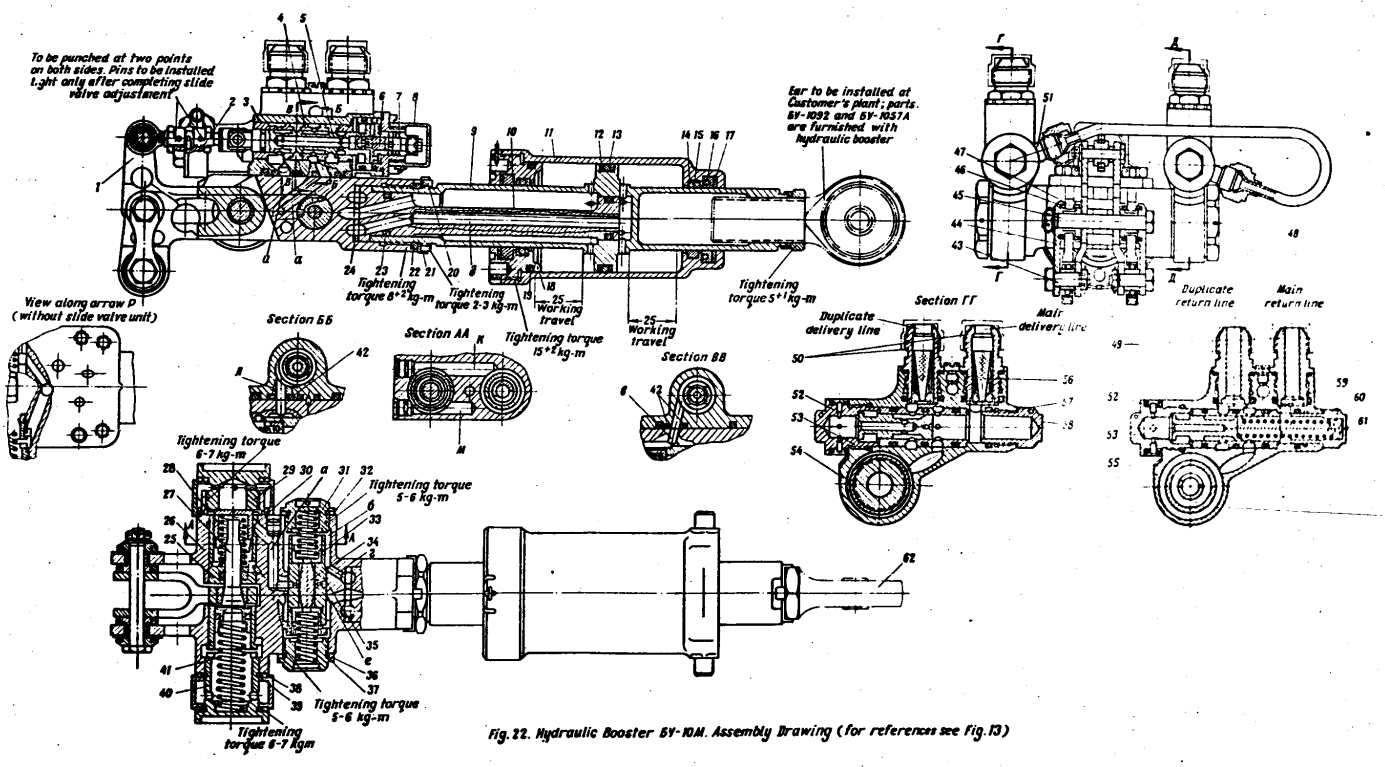

Fig. 22. Hydraulic Booster 6V-10M. Assembly Drawing (for references see Fig. 13)

Declassified in Part - Sanitized Copy Approved for Release 2012/01/04 : CIA-RDP80T00246A062100120001-8

Declassified in Part - Sanitized Copy Approved for Release 2012/01/04 : CIA-RDP80T00246A062100120001-8

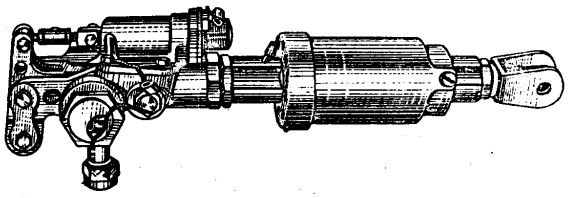

Fig. 23. BV-10 Booster: External View.

Declassified in Part - Sanitized Copy Approved for Release 2012/01/04 : CIA-RDP80T00246A062100120001-8

Declassified in Part - Sanitized Copy Approved for Release 2012/01/04 : CIA-RDP80T00246A062100120001-8

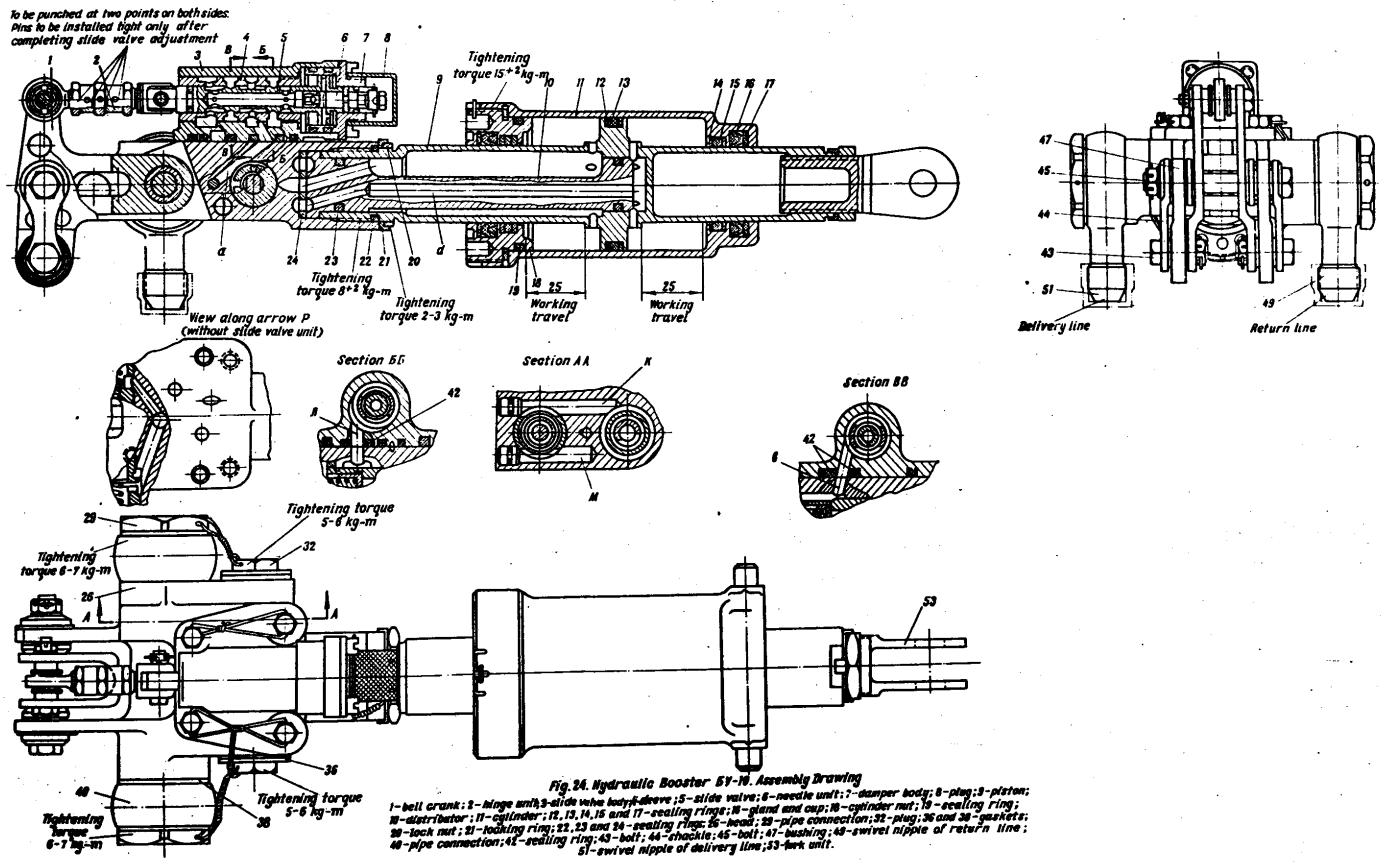

Fig. 24. Hydraulic Booster БУ-10. Assembly Drawing

1-bell crank; 2-hinge unit; 3-slide valve body; 4-sleeve; 5-slide valve; 6-needle unit; 7-damper body; 8-plug; 9-piston; 10-distributor; 11-cylinder; 12, 13, 14, 15 and 17-sealing rings; 16-gland and cup; 18-cylinder nut; 19-sealing ring; 20-lock nut; 21-locking ring; 22, 23 and 24-sealing rings; 25-head; 29-pipe connection; 32-plug; 36 and 38-gaskets; 40-pipe connection; 42-sealing ring; 43-bolt; 44-shackle; 45-bolt; 47-bushing; 49-swivel nipple of return line; 51-swivel nipple of delivery line; 53-fork unit.

Declassified in Part - Sanitized Copy Approved for Release 2012/01/04 : CIA-RDP80T00246A062100120001-8

Declassified in Part - Sanitized Copy Approved for Release 2012/01/04 : CIA-RDP80T00246A062100120001-8

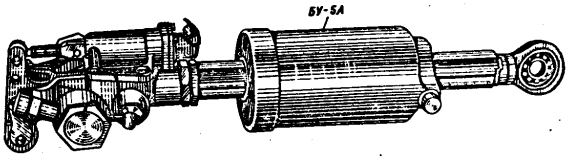

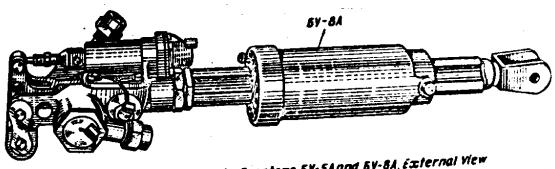

Fig. 25. Hydraulic Boosters БУ-5А and БУ-8А. External View

Declassified in Part - Sanitized Copy Approved for Release 2012/01/04 : CIA-RDP80T00246A062100120001-8

Declassified in Part - Sanitized Copy Approved for Release 2012/01/04 : CIA-RDP80T00246A062100120001-8

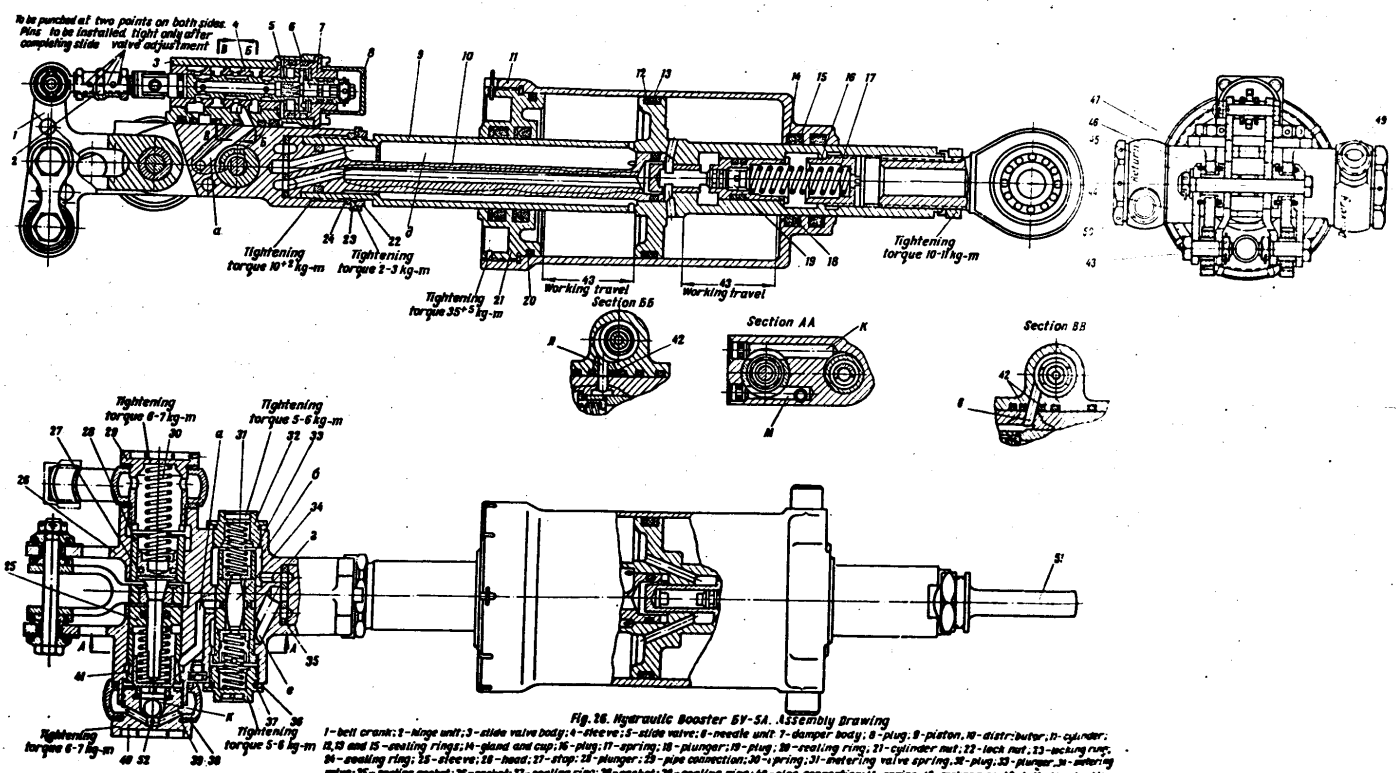

Fig. 26. Hydraulic Booster 6V-5A. Assembly Drawing

1 - bell crank; 2 - hinge unit; 3 - slide valve body; 4 - sleeve; 5 - slide valve; 6 - needle unit 7 - damper body; 8 - plug; 9 - piston, 10 - distributor, 11 - cylinder; 12, 13 and 15 - sealing rings; 14 - gland and cup; 16 - plug; 17 - spring; 18 - plunger; 19 - plug; 20 - sealing ring; 21 - cylinder nut; 22 - lock nut, 23 - locking ring; 24 - sealing ring; 25 - sleeve; 26 - head; 27 - stop; 28 - plunger; 29 - pipe connection; 30 - spring; 31 - metering valve spring, 32 - plug, 33 - plunger, 34 - metering valve; 35 - sealing gasket; 36 - gasket; 37 - sealing ring; 38 - gasket; 39 - sealing ring; 40 - pipe connection; 41 - spring; 42 - sealing ring; 43 - bolt; 44 - shackle, 45 - bolt; 46 - ring; 47 - bushing; 49 - swivel nipple of delivery line; 50 - swivel nipple of return line; 51 - end-piece; 52 - ball.

Declassified in Part - Sanitized Copy Approved for Release 2012/01/04 : CIA-RDP80T00246A062100120001-8

Declassified in Part - Sanitized Copy Approved for Release 2012/01/04 : CIA-RDP80T00246A062100120001-8

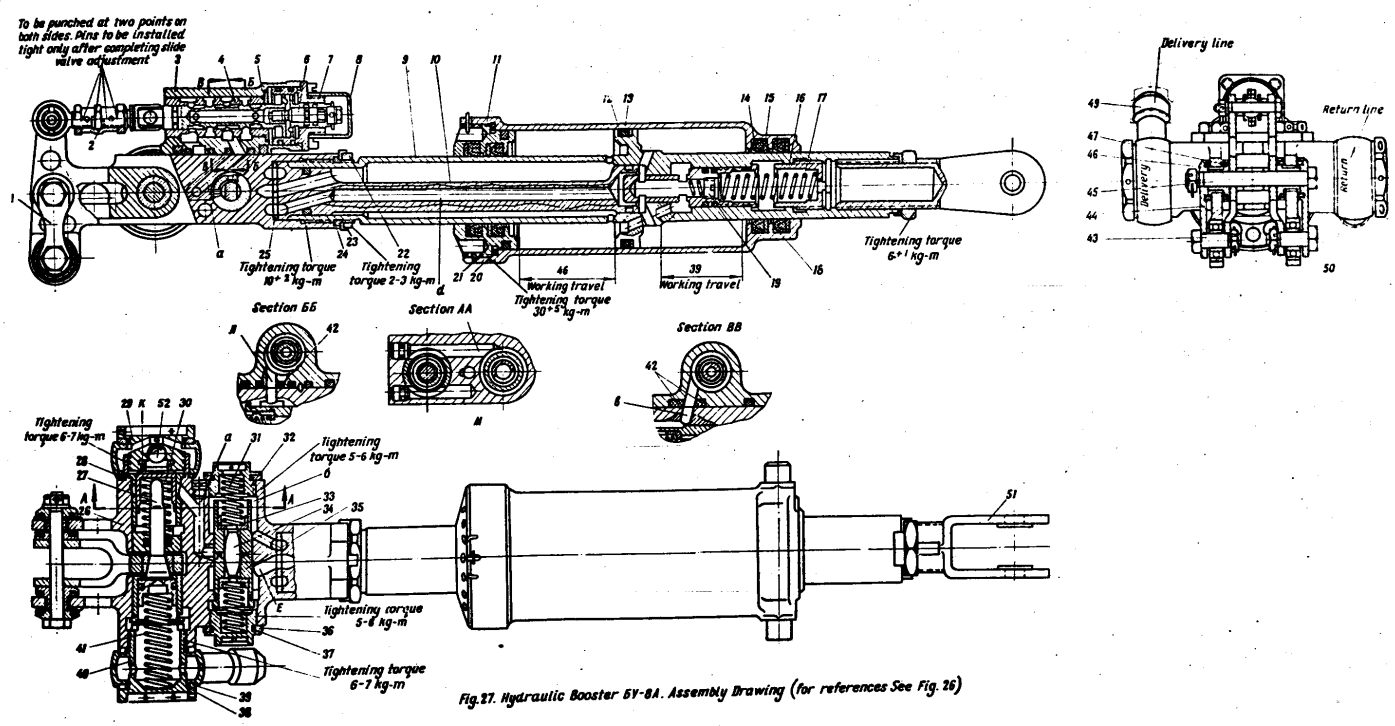

Fig.27. Hydraulic Booster БУ-8А. Assembly Drawing (for references See Fig. 26)

Declassified in Part - Sanitized Copy Approved for Release 2012/01/04 : CIA-RDP80T00246A062100120001-8

Declassified in Part - Sanitized Copy Approved for Release 2012/01/04 : CIA-RDP80T00246A062100120001-8

IV. TYPE БУ-13М HYDRAULIC BOOSTERS

Hydraulic boosters БУ-13М, БУ-14М and БУ-14МС are various modifications of one and the same type. They differ from one another by certain design elements, power cylinder sizes, certain parameters and installation sizes.

The hydraulic boosters of this group are installed in aircraft in the irreversible control system: boosters БУ-13М are installed in the aileron control line, boosters БУ-14М - in the elevator control line and booster БУ-14МС - in the stabilizer control line (the latter modification is mounted in aircraft fitted with controlled stabilizers).

Hydraulic boosters БУ-13М and boosters БУ-14М differ from each other by the sizes of cylinders; boosters БУ-14МС differ from boosters БУ-14М by the sizes of cylinders and by the travel of the main and duplicate slide valves.

A characteristic feature of the БУ-13М hydraulic boosters is the presence of a duplicate distributing slide valve which ensures normal operation of the unit in case of jamming of the main slide valve, prevents a spontaneous creeping of the control stick and provides for aircraft control.

When the hydraulic booster operates from the duplicate slide valve, the aircraft control is somewhat different comparing with the hydraulic booster operation from the main slide valve, as in this case the effort required for shifting the duplicate slide valve should be greater. Besides, depending on the position of the jammed slide valve this effort is not equal when the slide valve moves to the right or to the left. The speed of motion of the operating rod may also be different in some cases and may be slightly less than during operation of the main slide valve.

Declassified in Part - Sanitized Copy Approved for Release 2012/01/04 : CIA-RDP80T00246A062100120001-8

Declassified in Part - Sanitized Copy Approved for Release 2012/01/04 : CIA-RDP80T00246A062100120001-8

1. Basic Specifications

Characteristics	БУ-14М and БУ-14МС	БУ-13М
1	2	3
1. Type	Double-acting	
2. Operating principle	Hydro-mechanical	
3. Control system	Follow-up	
4. Maximum power built-up by hydraulic booster	4,600 ±100 kg with P = 130 kg/cm^2	1,100 ±50 kg with P = 130 kg/cm^2
5. Operating pressure in hydraulic system	85 ±5 - 135^{+5} kg/cm^2	
6. Operating fluid temperature	60 - 70°C (with short-time rise to +90°C for 10 min. after every 2 hours)	60 - 70°C (with short-time rise to +90°C for 10 min. after every 2 hours)
7. Working travel of operating rod	90 $^{+1}$ mm	50 $^{+2}$ mm
8. Distributing slide valve travel (main and duplicate)	for БУ-14М: 2 +0.05 mm; for БУ-14МС: 1.5 ±0.05 mm	2 ±0.05 mm
9. Main and duplicate slide valve travel (at connection with aircraft bell crank)	for БУ-14М: 2 +0.05 mm; for БУ-14МС: 1.5 ±0.05 mm	2 ±0.05 mm

1	2	3
10. Dead zone of hydraulic booster along main slide valve travel and at connection with aircraft bell crank	Not more than 0.1 mm	
11. Speed of operating rod travel without load at pressure P = 120 - 140 kg/cm^2	Not less than 90 mm/sec.	Not less than 100 mm/sec.
12. Operating rod friction with hydraulic system cut off	Not more than 15 kg (a weight of 15 kg must shift the operating rod through the whole length of its travel within not more than 3 sec.)	
13. Main slide valve friction	Not more than 0.8 kg	
14. Effort required for shifting duplicate slide valve (effort required for overcoming spring resilience plus duplicate slide valve friction with main slide valve stopped)	Not less than 15 kg and not over 20 kg (a weight of 15 - 20 kg must shift the slide valve and cause the beginning of piston motion within not more than 3 sec. from extreme positions)	

Declassified in Part - Sanitized Copy Approved for Release 2012/01/04 : CIA-RDP80T00246A062100120001-8

1	2	3
15. Hydraulic booster weight	EV-14M: 7.2 kg; EV-14MC: 7.6 kg	5 kg
16. Operating fluid	AMT-10	AMT-10

2. Operating Principle

All the modifications of EV-13M type are based on the same hydraulic operation diagram (See Fig.28).

The distributing device is located in the head unit and consists of main slide valve 1, duplicate slide valve 2 and sleeve 3. The main slide valve is housed inside the duplicate slide valve which performs the role of a sleeve during normal operation of the main slide valve.

The duplicate slide valve remains motionless as long as the friction between the main and the duplicate valves does not exceed the resilience of spring 5 which is equal to 16 kg. If the main slide valve gets jammed, that is when the friction between the main and the duplicate slide valves exceeds the effort required for shifting the duplicate slide valve, the latter moves together with the main valve as one unit. Motion is imparted to the slide valve by control rod 13 through bell crank 12. The length of the slide valve travel is determined by the size of the clearance between bolt 14 and the head hole.

Hydraulic booster operation from the main slide valve.

The hydraulic fluid is supplied from the hydraulic system pump to the middle recess of slide valve 1 through a pipe connection and return ball valve 11 along channel A. When the main and the duplicate slide valves are in the neutral position, as shown in diagram I, the middle collars of the slide valves cover the channels which supply fluid to, and take it out of, the cylinder. In this case the operating rod remains motionless inspite of the fact that the hydraulic fluid is delivered under pressure to the distributing device of the hydraulic booster.

When the slide valve moves to the left as shown in diagram II, the fluid from the middle recess is delivered into the left cavity of the cylinder along channel B through

Declassified in Part - Sanitized Copy Approved for Release 2012/01/04 : CIA-RDP80T00246A062100120001-8
Declassified in Part - Sanitized Copy Approved for Release 2012/01/04 : CIA-RDP80T00246A062100120001-8

Declassified in Part - Sanitized Copy Approved for Release 2012/01/04 : CIA-RDP80T00246A062100120001-8

the passage between the operating edge of the left middle collar of the main slide valve and the working edge of the inner grooves in the duplicate slide valve and through the permanent passage which is formed by the outer groove on the duplicate slide valve and the inner groove on the sleeve. The pressure of the working fluid causes the piston to move to the right. In its movement the piston forces the fluid from the right cavity into the return line along channel Б through the permanent passage formed by the inner groove of the sleeve and the outer groove on the duplicate slide valve and through the newly created passage between the operating edge of the right middle collar of the main slide valve and the inner groove in the duplicate slide valve, and through the holes in the sleeve and the head.

When the slide valve moves to the right, as illustrated in diagram III, the hydraulic fluid from the middle recess flows into the right cavity of the cylinder along channel Б through the newly created passage between the working edge of the right middle collar of the main slide valve and the working edge of the inner groove of the duplicate slide valve and through the permanent passage formed by the outer groove on the duplicate slide valve and the inner groove in the sleeve. The pressure of the hydraulic fluid causes the piston to move to the left and to force the fluid from the left cylinder into the reservoir through channel B.

Hydraulic booster operation from the duplicate slide valve is illustrated in Diagram IV. The main slide valve may become jammed in any point of its travel, including the extreme positions. The most typical positions of the jammed main slide valve are the extreme positions (right or left) and the middle position.

If the main slide valve gets jammed in the neutral position, the operation of the duplicate slide valve does not differ from the operation of the main slide valve except that

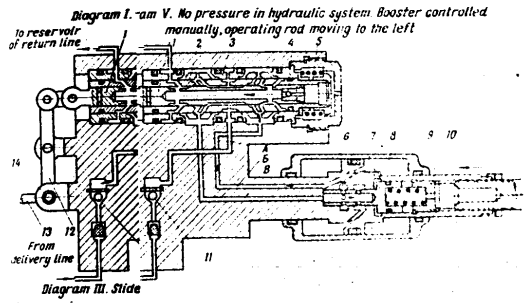

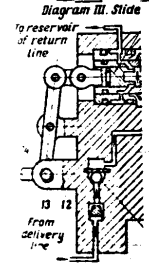

-cross-feed

Declassified in Part - Sanitized Copy Approved for Release 2012/01/04 : CIA-RDP80T00246A062100120001-8

Declassified in Part - Sanitized Copy Approved for Release 2012/01/04 : CIA-RDP80T00246A062100120001-8

ft middle
dge of the
hrough the
roove on
n the sleeve.
ton to move
the fluid
channel Б
groove of
slide valve
operating
valve and
d through

illustrated
e recess
channel Б
ing edge
and the
slide valve
ter groove
in the
the piston
left

slide

valve may
the
e jammed
r left)

tral posi-
s not
xcept that

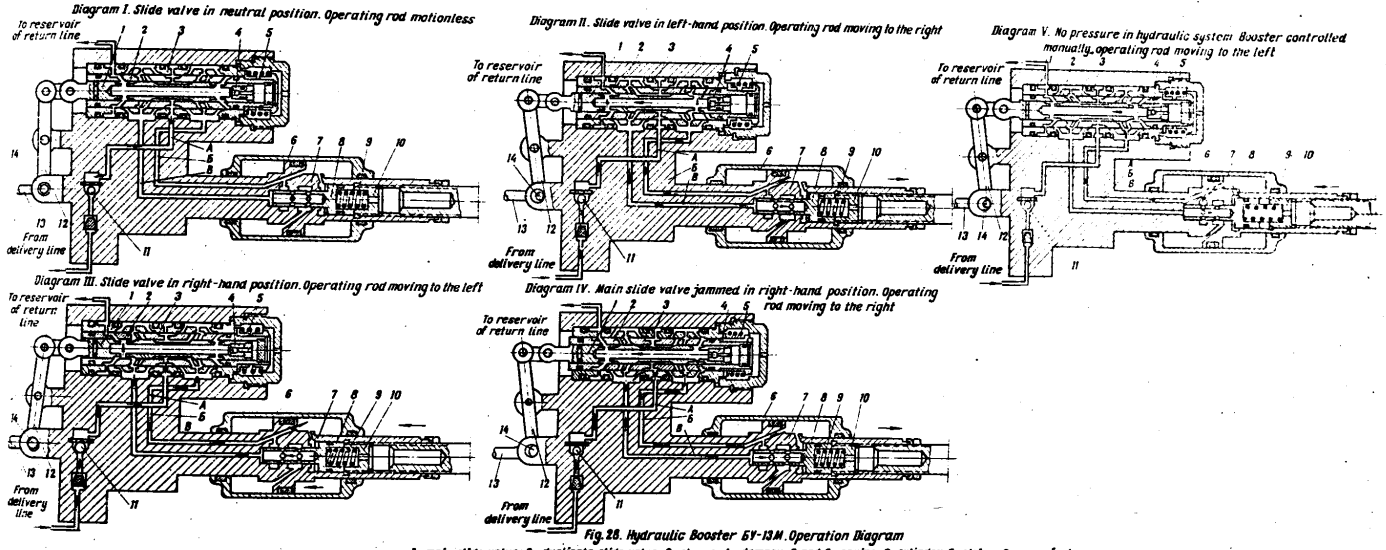

Fig. 28. Hydraulic Booster БУ-13М. Operation Diagram

1 – main slide valve; 2 – duplicate slide valve; 3 – sleeve; 4 – damper; 5 and 9 – spring; 6 – cylinder; 7 – piston; 8 – cross-feed valve plunger; 10 – plug; 11 – ball valve; 12 – bell crank; 13 – control rod; 14 – bolt.

Declassified in Part - Sanitized Copy Approved for Release 2012/01/04 : CIA-RDP80T00246A062100120001-8

Declassified in Part - Sanitized Copy Approved for Release 2012/01/04 : CIA-RDP80T00246A062100120001-8

the
coll
inne
perm
the
The
to t
from
thro
the
and
edge
the
the

in d
flow
thro
of t
work
and
on t
slee
to s
cyli

valv
same
extr
mais
and

tion
diff

the shifting of the duplicate valve requires a greater effort and the movement of the operating rod will be slightly slower.

In this case the slide valve travel in both directions will be symmetrical and both the delivery and drain channels will be covered symmetrically.

If the main slide valve gets jammed in one of the extreme positions, the hydraulic booster control will be somewhat different. To keep the booster piston immovable it is necessary to apply a certain effort to the control stick since the spring of the duplicate slide valve is compressed.

A deviation of the control stick in one direction is accompanied by the increase of the counteracting force. Contrary to that, when the control stick moves in the opposite direction, a certain effort must be applied to slow down its motion, as the spring of the duplicate slide valve tends to return to the initial position.

The speed of motion of the operating rod in one direction is determined by the size of the passage which is opened by the duplicate slide valve, whereas the speed of motion of the operating rod in the opposite direction is determined by the size of the passage opened by the main slide valve. These speeds therefore can be different.

By way of an example let us consider a case when the main slide valve is jammed in one of the extreme positions during hydraulic booster operation. If the slide valve gets jammed in the extreme right position, the supply of the hydraulic liquid into the working cavity of the cylinder and the return of the fluid from the other cavity will take place as shown in diagram III (see Fig. [illegible]), and the piston will move to the left. The maximum speed of the piston motion in this case will be determined by the size of the passage uncovered by the main slide valve.

Declassified in Part - Sanitized Copy Approved for Release 2012/01/04 : CIA-RDP80T00246A062100120001-8

Declassified in Part - Sanitized Copy Approved for Release 2012/01/04 : CIA-RDP80T00246A062100120001-8

To stop the motion of the piston to the left it is sufficient to stop the motion of the control stick. The effort applied with this purpose to the control stick is transmitted through the rods and bell crank 12 (See Fig.28) to the main slide valve and consequently to the duplicate slide valve. As a result, the duplicate slide valve compressing spring 5 will move leftward till it covers the permanent passages formed by the outer grooves of the duplicate valve and the inner grooves of the sleeve. This will cut out the supply of the operating fluid to the working cavity of the cylinder and the return of the operating fluid from the idle cavity, and the piston motion will cease. Due to the fact that the spring tends to assume its initial position exerting an effort of 13 - 16 kg, it is necessary to apply an equal force to the stick in order to retain it in the stationary position.

During operation of the hydraulic booster from the main slide valve this effort is practically equal to zero.

To ensure rightward motion of the piston, the duplicate slide valve should be moved to the left till it uncovers a passage formed by the central recesses on the duplicate slide valve and the grooves in the sleeve, and a passage formed by the extreme recesses on the duplicate slide valve and the extreme grooves in the sleeve (See Diagram IV, Fig.28). Thus, the maximum speed of the piston motion to the right is determined by the size of the passages formed by the outer grooves on the duplicate slide valve and the inner grooves on the sleeve, whereas the speed of the leftward motion is determined by the size of the passages formed by the recesses on the main slide valve and the inner grooves on the duplicate slide valve.

With the passages opened to a full capacity the speed of piston motion in both directions is practically the same.

If the main slide valve gets jammed in an intermediate position (between one of the extreme positions and the neutral position), maximum speeds of piston motion in one direction may be different from those in the other direction.

Should the main slide valve get jammed in one of the extreme positions, shifting the control stick in one direction will require an effort of 16 - 20 kg multiplied by the gear ratio, whereas shifting the control stick in the opposite direction will require a counteracting force of approximately the same value.

Hydraulic booster operation with manual control is illustrated in Diagram V (See Fig.28). The need of the manual control arises if there is no pressure in the hydraulic system. In this case the controlled elements are deflected by the physical effort of the pilot applied to the control stick and transmitted through a system of rods.

A change-over to the manual control due to the absence of operating pressure in the hydraulic booster is made possible by a cross-feed valve which ensures transfer of the hydraulic liquid from one cavity to the other depending on the piston motion in the cylinder.

Diagram V illustrates operation of the cross-feed valve. When the pressure in the cylinder cavities drops to 5 ± 0.5 kg/cm^2, cross-feed valve plunger 8 under the action of spring 9 will move to the extreme left position. As the piston moves to the right, part of the operating fluid will be forced out into the reservoir along channel Б through the distributing slide valve, and the remaining amount of liquid will freely flow from the right cavity of the cylinder into the left one. When the piston moves leftward, the operating fluid will flow along the same channels from the left cavity to the right cavity.

Declassified in Part - Sanitized Copy Approved for Release 2012/01/04 : CIA-RDP80T00246A062100120001-8

Declassified in Part - Sanitized Copy Approved for Release 2012/01/04 : CIA-RDP80T00246A062100120001-8

As pressure is fed into one of the cylinder cavities, the cross-feed plunger, overcoming the spring resilience will shift to the extreme right position, thus disconnecting the cylinder cavities and ensuring normal operation of the hydraulic booster under operating pressure.

3. Description of Design

The БУ-13М hydraulic booster is shown in Fig.29 (external view) and Fig.30 (assembly drawing).

Hydraulic boosters БУ-14М (Fig.31) are connected to the aircraft controlled units by means of ear 15 (Fig.32) instead of a fork in the case of hydraulic boosters БУ-13М. The same purpose in hydraulic boosters БУ-14МС (Fig.33) is served by end-piece 15 (Fig.34) which is different by its design from either the fork or the ear of the hydraulic boosters mentioned above.

The type БУ-13М hydraulic boosters differ from the БУ-10 type boosters by the design of the head unit. All other units and parts are identical with the corresponding units and parts of hydraulic boosters БУ-10. Therefore, the description of the booster БУ-13М construction is confined only to that of the head unit.

The head of the БУ-13М hydraulic booster serves to join the piston with the aircraft control lever system and to accommodate the distributing device.

The head of the booster houses sleeve 2 (Fig.35) with distributing slide valves: duplicate slide valve 3 and main slide valve 4. Sleeve 2 is a hollow bushing with a thrust shoulder at the right end. The outer surface of the sleeve is provided with four annular recesses separated by five grooves of rectangular section which accommodate sealing rings.

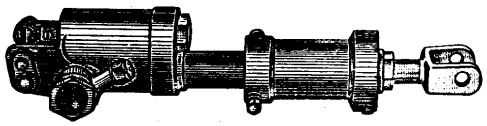

Fig.29. БУ-13М Booster. External View

Declassified in Part - Sanitized Copy Approved for Release 2012/01/04 : CIA-RDP80T00246A062100120001-8

Declassified in Part - Sanitized Copy Approved for Release 2012/01/04 : CIA-RDP80T00246A062100120001-8

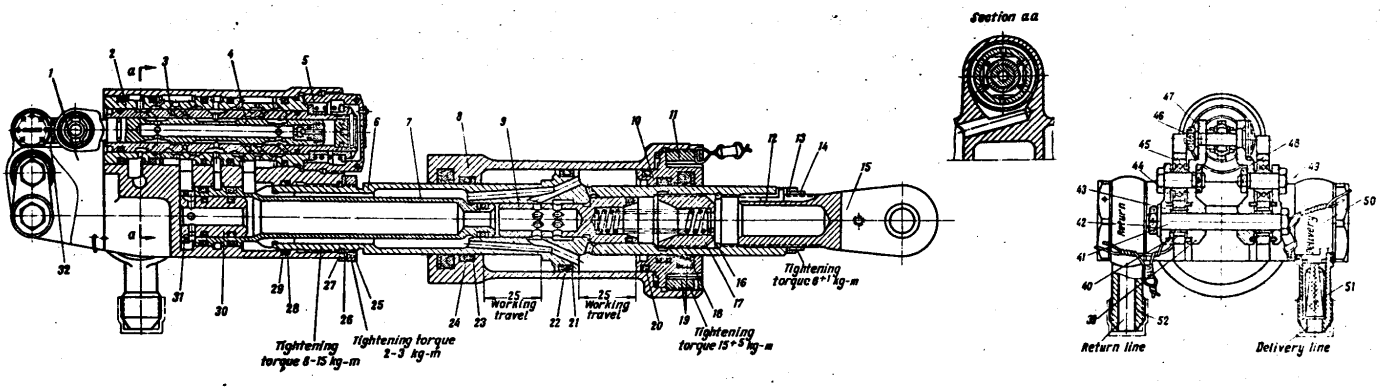

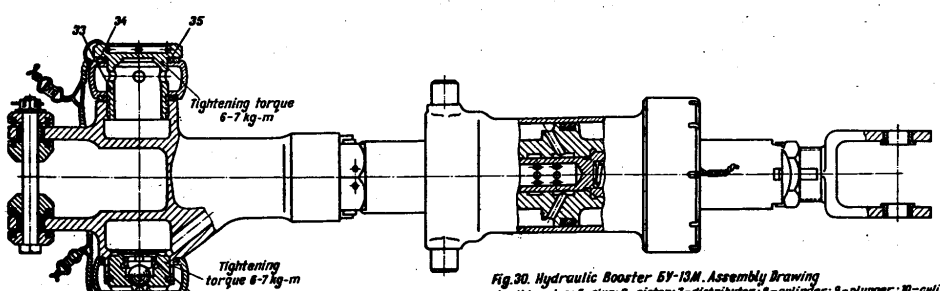

Fig.30. Hydraulic Booster БУ-13М. Assembly Drawing

1-head; 2-sleeve; 3-duplicate slide valve; 4-main slide valve; 5-plug; 6-piston; 7-distributor; 8-cylinder; 9-plunger; 10-cylinder bushing; 11-cylinder nut; 12-key; 13-locking ring; 14-lock nut; 15-fork; 16-spring; 17-plug; 18-sealing ring; 19-cup unit; 20 to 24-sealing rings; 25-lock nut; 26-locking ring; 27 to 29-sealing rings; 30-bushing; 31-gasket; 32-shackle unit; 33-pipe connection; 34 to 35-sealing rings; 36-bushing; 37-ball; 38-pipe connection; 39-left bell crank; 40-bell ring; 41-bolt; 42-nut; 43-bushing; 44-left shackle; 45-bearing; 46-nut; 47-eccentric bolt; 48-right bell crank; 49-right shackle; 50-swivel nipple; 51-filter; 52-swivel nipple.

Declassified in Part - Sanitized Copy Approved for Release 2012/01/04 : CIA-RDP80T00246A062100120001-8

Declassified in Part - Sanitized Copy Approved for Release 2012/01/04 : CIA-RDP80T00246A062100120001-8

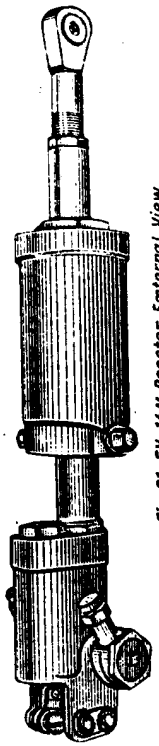

Fig. 31. БУ-14М Booster. External View

Declassified in Part - Sanitized Copy Approved for Release 2012/01/04 : CIA-RDP80T00246A062100120001-8

Declassified in Part - Sanitized Copy Approved for Release 2012/01/04 : CIA-RDP80T00246A062100120001-8

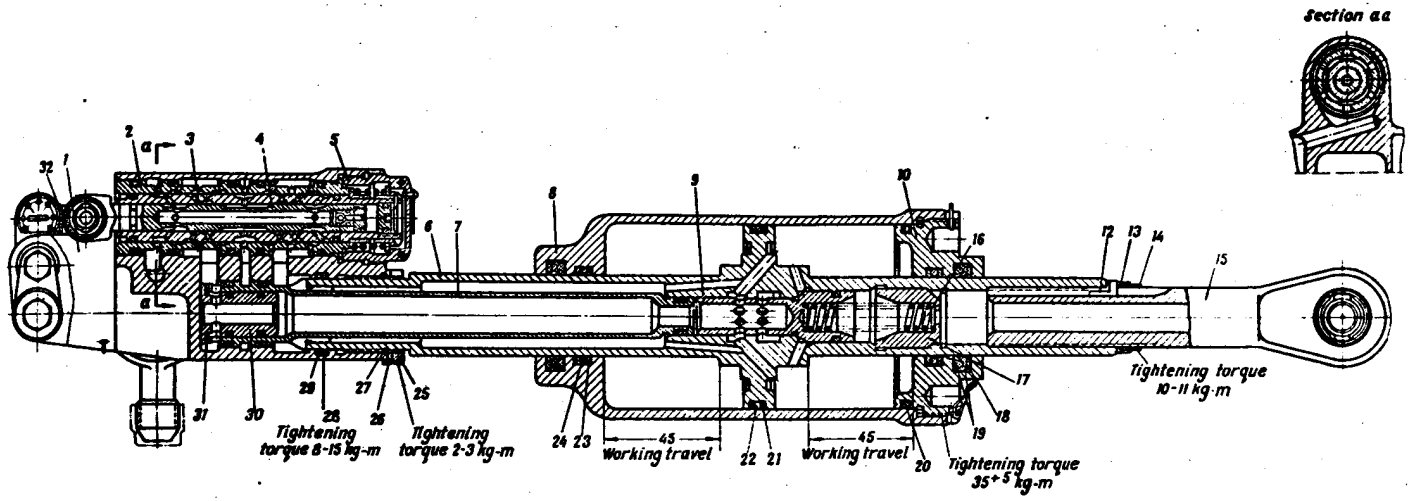

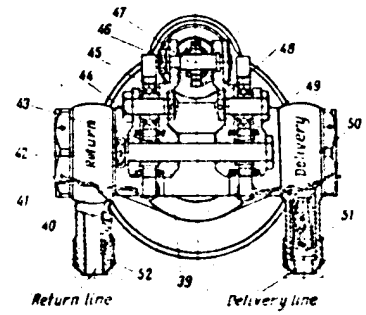

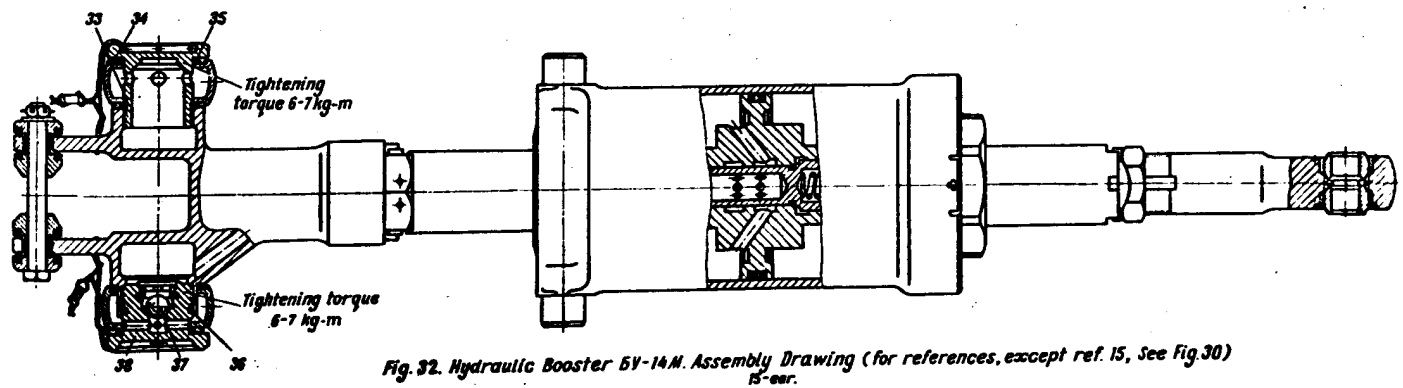

Fig. 32. Hydraulic Booster 5V-14M. Assembly Drawing (for references, except ref. 15, See Fig. 30)
15-ear.

Declassified in Part - Sanitized Copy Approved for Release 2012/01/04 : CIA-RDP80T00246A062100120001-8

Declassified in Part - Sanitized Copy Approved for Release 2012/01/04 : CIA-RDP80T00246A062100120001-8

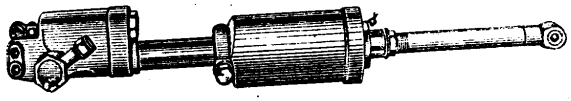

Fig.33. БУ-14МС Booster. External View

Declassified in Part - Sanitized Copy Approved for Release 2012/01/04 : CIA-RDP80T00246A062100120001-8

Declassified in Part - Sanitized Copy Approved for Release 2012/01/04 : CIA-RDP80T00246A062100120001-8

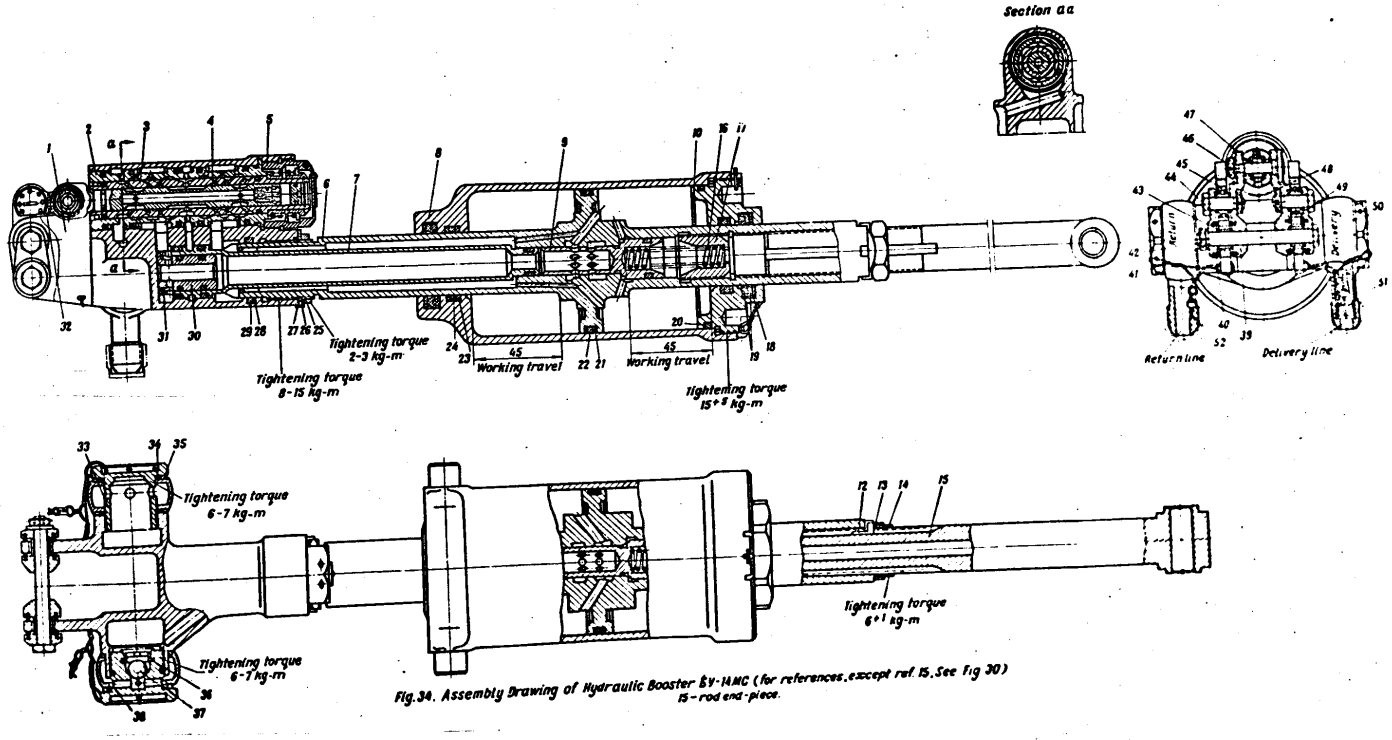

Fig.34. Assembly Drawing of Hydraulic Booster БУ-14МС (for references, except ref. 15, See Fig 30)
15 - rod end-piece.

Declassified in Part - Sanitized Copy Approved for Release 2012/01/04 : CIA-RDP80T00246A062100120001-8

Declassified in Part - Sanitized Copy Approved for Release 2012/01/04 : CIA-RDP80T00246A062100120001-8

The operating fluid is supplied under pressure to the second recess on the right side through the pipe connection of the delivery line and flows through the radial holes in the sleeve to the middle recesses of the main or duplicate slide valves for distribution. The extreme left recess together with the radial and oblique passages in the sleeve and in the duplicate and main slide valves formspermanent passages through which the operating fluid is returned into the tank. Each of the two other recesses (the first and the third one on the right side) is connected by radial and oblique borings with three inner annular grooves. They serve to communicate the operating cavities of the cylinder either with the delivery line or the return line depending on the position of the slide valve.

The inner cavity of the sleeve houses duplicate slide valve 3 which is also a hollow bushing. The outer surface of the duplicate slide valve is provided with four angle grooves and three shaped recesses.

During operation of the hydraulic booster from the duplicate slide valve, the two extreme shaped recesses connect the return line of the slide valve with the drain line through the oblique borings. The middle shaped recess, depending on the position of the slide valve, connects the right or left cavities of the cylinder with the delivery line.

The inner surface of the duplicate slide valve has four annular recesses which are connected through the oblique passages with the four angle grooves on the outer surface of the slide valve. These annular recesses, holes and grooves form the inlet and outlet passages for the operating fluid during hydraulic booster operation from the main slide valve.

The outer surface of the duplicate slide valve also has two annular grooves of a rectangular section for sealing rings.

Declassified in Part - Sanitized Copy Approved for Release 2012/01/04 : CIA-RDP80T00246A062100120001-8

Declassified in Part - Sanitized Copy Approved for Release 2012/01/04 : CIA-RDP80T00246A062100120001-8

The right end of the duplicate slide valve mounts bushing 9, spring 10 and nut 12 fixed by stop ring 14. Spring 10 holds the duplicate slide valve in the neutral position.

When the main slide valve gets jammed, the pilot, overcoming the force of the spring, shifts the duplicate valve. The travel of the duplicate slide valve is determined by the clearance between bushings 43 (See Fig.30) and the holes in the head.

Main slide valve 4 (See Fig.35) which is a hollow rod with an ear at the left end is housed inside the duplicate slide valve.

The outer surface of the main slide valve has three recesses which form operating collars. Two middle collars of the main slide valve ensure the regulation of the fluid supply into one cylinder cavity and its return from the other cavity by covering and uncovering the ports in the duplicate slide valve and, consequently, the channels leading to both cylinder cavities. The inner edges of the middle collars control the delivery of the fluid into the cylinder, and the outer edges - the return of the fluid from the cylinder.

The operating surfaces of the main and duplicate slide valve collars are machined and finished to very close tolerances so that they may cover in the neutral position and open in a shifted position the fluid inlet and outlet passages simultaneously and symmetrically.

The hole on the right side of the main slide valve houses a damper which is essentially a return valve. The purpose of the damper is to eliminate a possible hydraulic disbalance of the slide valve by permitting the operating fluid to flow through the clearances between the ball and the seat in the damper body.

The main slide valve is hinged with bell crank 39 (See Fig.30) which imparts to it reciprocal motion. The travel

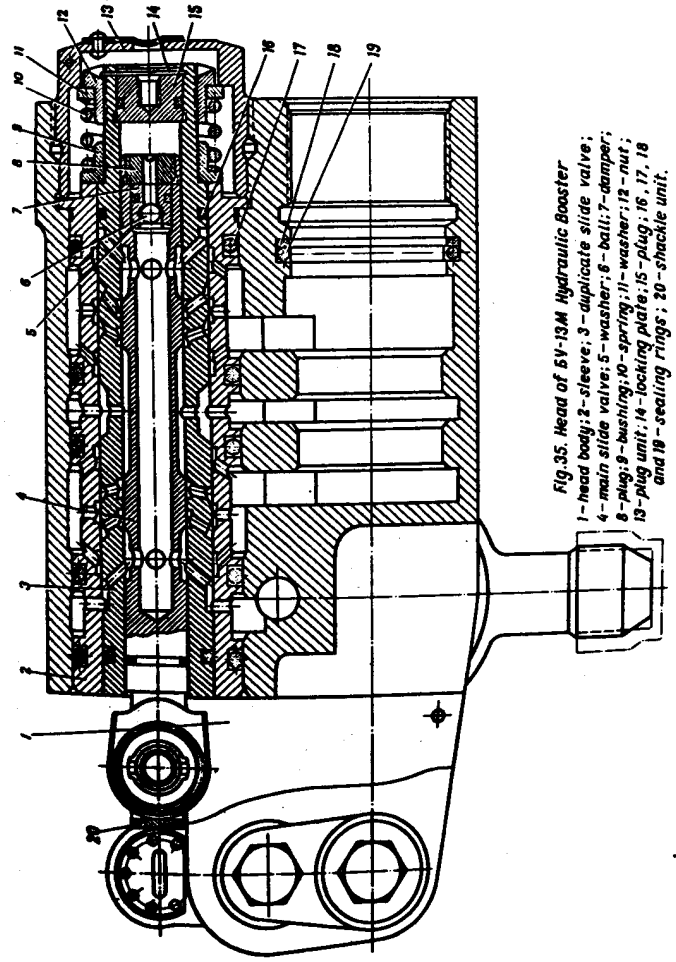

Fig.35. Head of БУ-13М Hydraulic Booster
1-head body; 2-sleeve; 3-duplicate slide valve; 4-main slide valve; 5-washer; 6-ball; 7-damper; 8-plug; 9-bushing; 10-spring; 11-washer; 12-nut; 13-plug unit; 14-locking plate; 15-plug; 16, 17, 18 and 19-sealing rings; 20-shackle unit.

Declassified in Part - Sanitized Copy Approved for Release 2012/01/04 : CIA-RDP80T00246A062100120001-8

Declassified in Part - Sanitized Copy Approved for Release 2012/01/04 : CIA-RDP80T00246A062100120001-8

of the main slide valve is determined by the size of the clearance between bushing 43 and its hole in head 1.

Head 1 is connected with piston 6 with the help of a thread. The joint is packed by rubber rings with leather gaskets.

V. TYPE БУ-1У HYDRAULIC BOOSTERS

The given type includes hydraulic boosters БУ-1У (See Fig.1), БУ-1М (Fig.36) and Б1-1М-РВ (Fig.37). These boosters are various modifications of the БУ-1У type and differ from one another by certain design elements and installation sizes.

Hydraulic boosters БУ-1 are widely used in various aircraft. Hydraulic boosters БУ-1У, a little modernized, are interchangeable with hydraulic boosters БУ-1 and differ from the latter by the following features:

1. The threaded joint of the sealing nut with the cylinder has been substituted by a lock joint of the gun breech block type which allows to remove the cylinder without disassembling the whole unit.

2. The head-to-rod joint has been altered;

3. The sealing cup design has been changed and one packing unit has been divided in two, which reduces the operating rod friction and improves the tightness of the operating rod-to-cylinder sliding joint;

4. The role of the guide bushing in the hydraulic booster БУ-1 is performed by the booster head whereas the БУ-1У type is provided with a special floating bushing which improves the tightness of the joint, and prevents the possibility of the distributing end-piece being jammed during assembly and operation under great loads as well as in the extreme positions of the piston.

Hydraulic boosters БУ-1У, series Д, differ from hydraulic boosters БУ-1У of earlier series by the following features:

Declassified in Part - Sanitized Copy Approved for Release 2012/01/04 : CIA-RDP80T00246A062100120001-8

Declassified in Part - Sanitized Copy Approved for Release 2012/01/04 : CIA-RDP80T00246A062100120001-8

1. Improved anti-corrosive coating.

2. Smaller clearances in sliding joints.

3. Replacement of one set of tongued cups in the sliding joint of the operating rod with the cylinder and the cylinder bushing by a set with a sealing ring of the round section.

4. Presence of leather rings protecting the rubber seals in sliding joints.

Hydraulic boosters БУ-1У are installed on МиГ-17 aircraft in the reversible system of ailerons control.

Hydraulic boosters БУ-1М and БУ-1М-РВ differ from БУ-1У boosters, series Д, by the following features:

1. Reinforced trunnions by which the hydraulic booster is attached to the aircraft bracket.

2. Different construction of the end-piece which is connected with the rods running to the aircraft control surfaces.

Hydraulic booster БУ-1М-РВ is employed in the elevator control system, since the travel of elevators is not equal relative to the neutral position, this hydraulic booster differs from the БУ-1М modification by a symmetric location of the flat on the metering valve.

Hydraulic boosters БУ-1М are installed in the irreversible aileron control system, whereas БУ-1М-РВ boosters are used in the irreversible elevator control system.

Hydraulic boosters БУ-1У are more widely used than other boosters of this type, therefore the construction and operation of БУ-1У boosters will be treated in greater detail in the subsequent paragraph.

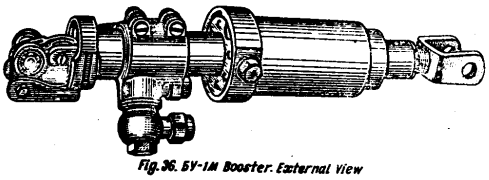

Fig.36. БУ-1М Booster. External View

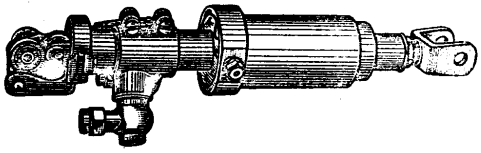

Fig.37. БУ-1М-РВ Booster. External View

Declassified in Part - Sanitized Copy Approved for Release 2012/01/04 : CIA-RDP80T00246A062100120001-8

Declassified in Part - Sanitized Copy Approved for Release 2012/01/04 : CIA-RDP80T00246A062100120001-8

I. Basic Specifications

Characteristics	BY-1V	BY-1M and BY-1M-PB
1	2	3
1. Type	Double-acting	
2. Operating principle	Hydro-mechanical	
3. Control system	Follow-up	
4. Maximum power	Not less than 750 kg with $P = 60\ kg/cm^2$	Not less than 1,100 kg with $P = 80\ kg/cm^2$
5. Operating pressure in hydraulic system	$60 \pm 5\ kg/cm^2$	$60 - 80\ kg/cm^2$
6. Maximum travel of operating rod	$56\ ^{+1}_{-2}$ mm	$56\ ^{+1}_{-2}$ mm
7. Working travel of operating rod	52 mm (26 mm on either side of the neutral position)	52 mm (26 mm on either side of the neutral position for BY-1M boosters; not more than 19 mm on the side of the fork and not more than 33 mm on the side of the head for BY-1M-PB boosters)
8. Maximum travel of distributing rod	0.8 - 0.9 mm	1.2 - 1.3 mm

Declassified in Part - Sanitized Copy Approved for Release 2012/01/04 : CIA-RDP80T00246A062100120001-8

Declassified in Part - Sanitized Copy Approved for Release 2012/01/04 : CIA-RDP80T00246A062100120001-8

I. Basic Specifications

Characteristics	БУ-1У	БУ-1М and БУ-1М-РВ
1	2	3
1. Type	Double-acting	
2. Operating principle	Hydro-mechanical	
3. Control system	Follow-up	
4. Maximum power	Not less than 750 kg with P = 60 kg/cm^2	Not less than 1,100 kg with P = 80 kg/cm^2
5. Operating pressure in hydraulic system	60 $\pm$5 kg/cm^2	60 - 80 kg/cm^2
6. Maximum travel of operating rod	56 $^{+1}_{-2}$ mm	56 $^{+1}_{-2}$ mm
7. Working travel of operating rod	52 mm (26 mm on either side of the neutral position)	52 mm (26 mm on either side of the neutral position for БУ-1М boosters; not more than 19 mm on the side of the fork and not more than 33 mm on the side of the head for БУ-1М-РВ boosters)
8. Maximum travel of distributing rod	0.8 - 0.9 mm	1.2 - 1.3 mm

Declassified in Part - Sanitized Copy Approved for Release 2012/01/04 : CIA-RDP80T00246A062100120001-8

Declassified in Part - Sanitized Copy Approved for Release 2012/01/04 : CIA-RDP80T00246A062100120001-8

1	2	3
9. Dead zone	0.2 - 0.6 mm	Not more than 0.1 mm
10. Speed of operating rod travel under load	Not less than 70 mm/sec.	
11. Operating rod friction with hydraulic system out in	Not more than 12 kg	
12. Friction losses in distributing rod	Not more than 0.55 kg	Not more than 0.65 kg
13. Hydraulic booster weight	Not more than 3.5 kg	Not more than 3.65 kg
14. Operating fluid	AMT-10	AMT-10
15. Guaranteed service life of hydraulic booster	300 hours[1] during 4 - 5 years	300 hours[1] during 4 - 5 years
16. Guaranteed storage period of hydraulic booster and spare parts as slushed by the Manufacturer	2 years	2 years

1) The guaranteed service life of the hydraulic booster includes 3 years of booster operation on aircraft, the remaining time being distributed between transportation and storage in depots of the Manufacturer and the Customer.

2. Operating Principle

The hydraulic diagram of operation of this type boosters differs from the diagram described above (See Section II) by the system of cross-feeding both cavities of the cylinder with the help of floating plungers of the metering valve and the vacuum damper of the one-way slide valve.

The diagram of hydraulic booster BY-1Y operation is illustrated in Fig.38.

Cylinder 1 accommodates operating rod 4 which is provided with channels supplying the operating fluid to the cylinder and returning it from the cylinder.

Distributing rod 2 which is housed in the inner cavity of the operating rod serves for the distribution of the operating fluid. It is essentially a slide valve with four collars. The operating fluid is supplied to the recess between the middle collars of the slide valve from a pump which builds up a pressure up to 60 kg/cm^2.

When the distributing rod is in the neutral position, the middle collars of the slide valve overlap the cylinder supply and return channels "a" and "б" by 0.2 - 0.3 mm, thus locking the fluid in both cavities of the cylinder.

When the distributing rod moves in one or the other direction, the channels become uncovered, which results in the hydraulic fluid being forced into one of the cavities of the cylinder and out of the other into the return line. Under the hydraulic fluid pressure the operating rod moves along the axis of the cylinder and deflects the controlled units through leverage.

Both BY-1Y and BY-10 hydraulic boosters allow to overcome heavy loads originating from the surfaces of the controlled units by a minor effort applied to the control stick or control pedals.

Declassified in Part - Sanitized Copy Approved for Release 2012/01/04 : CIA-RDP80T00246A062100120001-8

Declassified in Part - Sanitized Copy Approved for Release 2012/01/04 : CIA-RDP80T00246A062100120001-8

Metering needle 6 located inside the piston of the operating rod parallel to its axis ensures a smooth and uniform travel of the operating rod under load. As the piston moves from the neutral to the load position, additional quantities of the operating fluid are supplied into the operating cavity through the flats of the metering needle (Diagram II, slide valve shifted to the right) directly from the delivery line by-passing the distributing device; when the piston moves to the neutral position (Diagram III), the operating fluid is supplied to the drain cavity of the cylinder directly from the delivery line through the flats of the metering needle and damps the piston motion.

The hydraulic booster is provided with an emergency cross-feed system ensuring a normal manual control if there is no pressure in the hydraulic system. This purpose is served by plungers 3 by-passing the operating fluid from one cylinder cavity to the other (Diagram IV) when the manual control is used.

Under normal operating conditions of the hydraulic booster the liquid is supplied to the recess between the plungers as a result of which the plungers occupy the extreme position and cover the channels which connect both cavities of the cylinder.

The cylinder is sealed tight by rubber seals.

D i a g r a m I illustrates the neutral position of the slide valve; the middle collars of the valve cover channels "a" and "б" and the operating rod is motionless as both cylinder cavities are cut off from the delivery and return lines.

D i a g r a m II illustrates operation of the hydraulic booster when the operating rod moves to the right towards load position (for aileron deflection). To deflect the ailerons, operating rod 4 must move to the right or to the left of its middle position in the cylinder.

Diagram I. Slide valve in neutral position. Operating rod (piston) ...tion from middle position

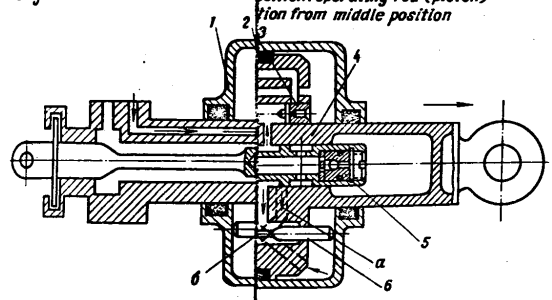

Diagram III. Slide valve in left-system. Booster controlled ...ng to the right; fluid being moving to the left from load left cavity

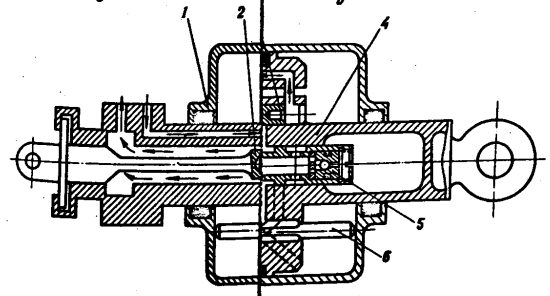

Declassified in Part - Sanitized Copy Approved for Release 2012/01/04 : CIA-RDP80T00246A062100120001-8

Declassified in Part - Sanitized Copy Approved for Release 2012/01/04 : CIA-RDP80T00246A062100120001-8

aside the piston of the
s ensures a smooth and
od under load. As the piston
d position, additional
are supplied into the
s of the metering needle
to the right) directly
the distributing device;
al position (Diagram III),
the drain cavity of the
y line through the flats
he piston motion.
ided with an emergency
manual control if there
tem. This purpose is
operating fluid from
iagram IV) when the

ons of the hydraulic
he recess between the
lungers occupy the
els which connect both

rubber seals.
the neutral position of
of the valve cover
ting rod is motionless
from the delivery

operation of the
rod moves to the right
flection). To deflect
ve to the right or to
e cylinder.

Diagram I. Slide valve in neutral position. Operating rod (piston) motionless

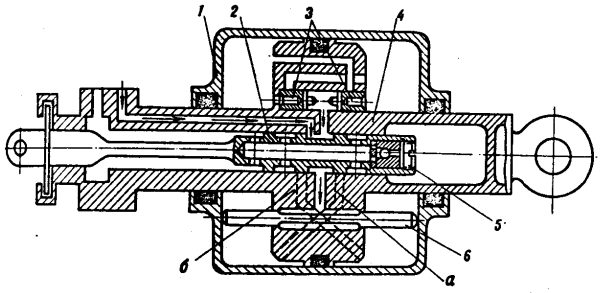

Diagram II. Slide valve in right-hand position. Operating rod (piston) moving to the right towards load position from middle position

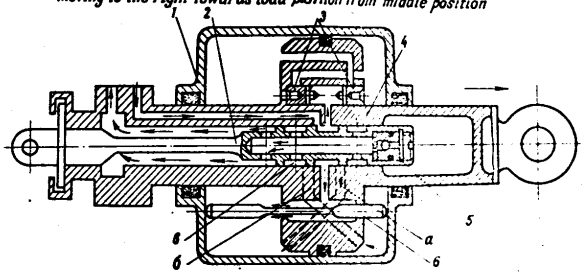

Diagram III. Slide valve in left-hand position. Operating rod (piston) moving to the left from load position to neutral position

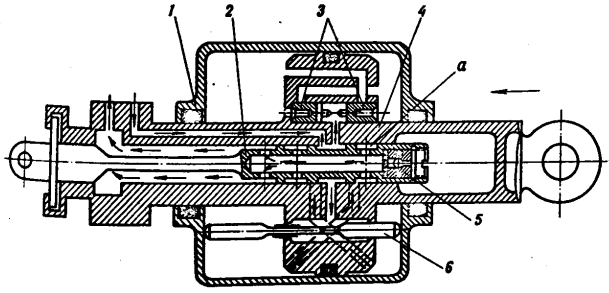

Diagram IV. No pressure in hydraulic system. Booster controlled manually. Operating rod (piston) moving to the right; fluid being forced from right cavity to left cavity

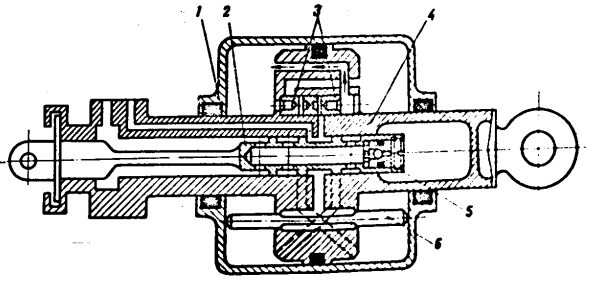

Fig.38. БУ-IV Hydraulic Booster. Operation Diagram
1-cylinder; 2-slide valve; 3-by-pass plungers; 4-operating rod; 5-slide valve damper; 6-metering needle.

Declassified in Part - Sanitized Copy Approved for Release 2012/01/04 : CIA-RDP80T00246A062100120001-8

Declassified in Part - Sanitized Copy Approved for Release 2012/01/04 : CIA-RDP80T00246A062100120001-8

In the case under consideration operating rod 2 moves to the right, as a result of which channels "a" and "б" will be uncovered on the left side and the operating fluid will be forced into the left cavity of the cylinder through the uncovered passage into channel "a". Simultaneously, the operating fluid will be supplied into the left cavity of the cylinder directly from the delivery line through the flats of the metering needle. Under the action of the operating fluid the operating rod will start moving to the right relative to the cylinder deflecting the ailerons from their neutral position. At the same time the hydraulic fluid in the right cavity of the cylinder will be forced out into the return line along channel "б" through the uncovered passage of recess "в".

D i a g r a m III illustrates operation of the hydraulic booster when the operating rod returns from the load position (the ailerons return to the neutral position). In this case the distributing rod (slide valve) is shifted leftward as a result of which channels "a" and "б" will be partially uncovered on the right side and the operating fluid will start coming into the right cavity of the cylinder along channel "б" through the uncovered passage.

Under the action of the hydraulic fluid and aerodynamic forces on the ailerons the operating rod moves to the left to its middle position forcing the fluid into the left cavity of the cylinder along channel "a" to the return line.

Simultaneously, the operating fluid is supplied from the delivery line to the left cavity of the cylinder opposite the moving piston through the flats of the metering needle, thus ensuring a more smooth and uniform motion of the piston. When the piston reaches the middle position relative to the cylinder, the fluid supply through the metering needle stops.

Declassified in Part - Sanitized Copy Approved for Release 2012/01/04 : CIA-RDP80T00246A062100120001-8

Declassified in Part - Sanitized Copy Approved for Release 2012/01/04 : CIA-RDP80T00246A062100120001-8

When the operating rod moves to the left of its neutral position, additional quantities of the hydraulic liquid will be supplied to the right cavity of the cylinder.

D i a g r a m IV illustrates the manual control.

The need of the mechanical control may arise if there is no pressure in the hydraulic system. In this case the ailerons will be deflected by the pilot's physical effort applied to the control stick and transmitted through a system of levers.

During this, operating rod 4 functions as one of the rods in the control system.

To ensure a possibility of the mechanical control, the hydraulic boosters incorporate two pairs of by-pass plungers 3 which disconnect the cylinder cavities if there is pressure in the delivery line. Should there be no pressure in the hydraulic system, the pilot's effort is transmitted to operating rod 4. The pressure that is built up in the right or left cylinder cavity (depending on the direction of the effort) moves the corresponding plungers. The other plungers located at the opposite side of the piston head are motionless.

The moving plungers open the channels connecting the cylinder cavities and ensure a free motion of the operating rod.

3. Description of Design

The II-2 hydraulic booster incorporates cylinder 23 (Fig.3), with operating rod (piston) 12 housing distributing rod (slide valve) 22 with a system of inlet and outlet channels, and parts which connect the unit with control rods and aircraft hydraulic system.

Cylinder 2 (Fig.4) is a thin-walled bushing with a bottom flange and two trunnions 4. The trunnions serve for attaching the hydraulic booster to the aircraft. Bushing 2

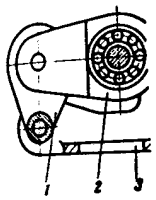

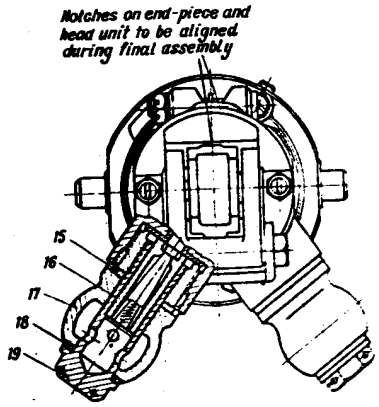

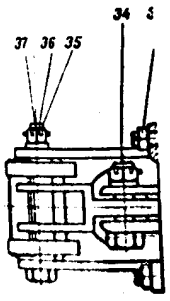

Declassified in Part - Sanitized Copy Approved for Release 2012/01/04 : CIA-RDP80T00246A062100120001-8

Declassified in Part - Sanitized Copy Approved for Release 2012/01/04 : CIA-RDP80T00246A062100120001-8

of its neutral
lic liquid will
er.
al control.
rise if there
s case the
sical effort
hrough a

one of the

control, the
pass plungers 3
is pressure
re in the
tted to
n the right
ion of the
her plungers
are motionless.
eting the
operating

linder 23
stributing
outlet
ntrol rods

with a
rve for
ushing 2

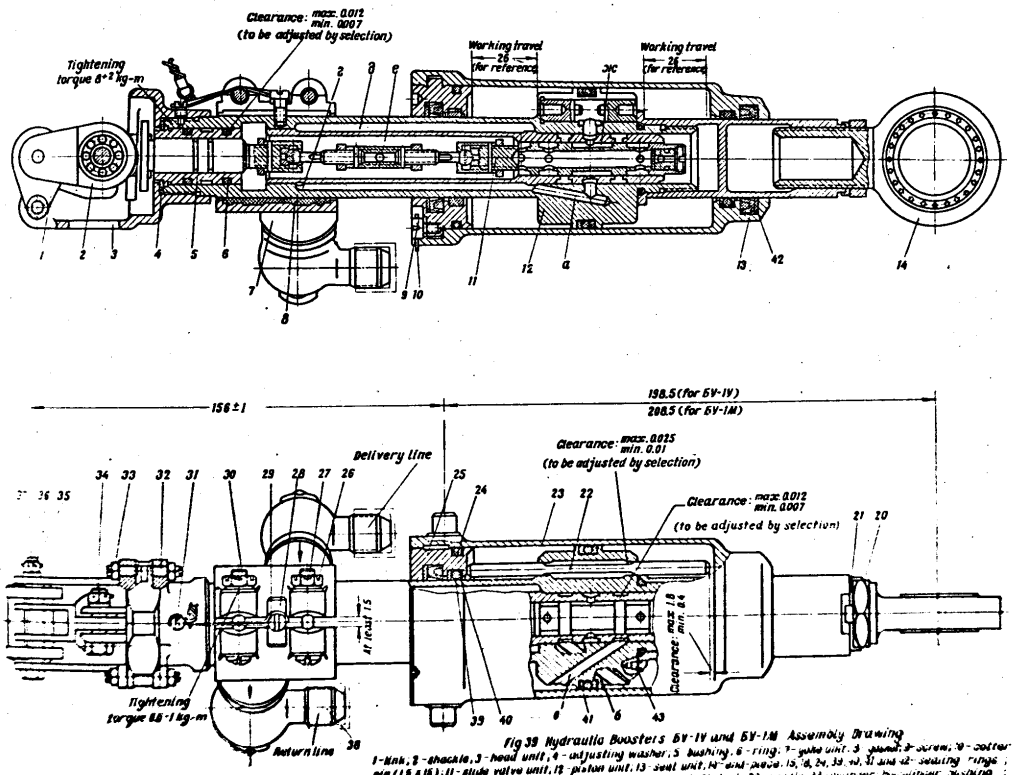

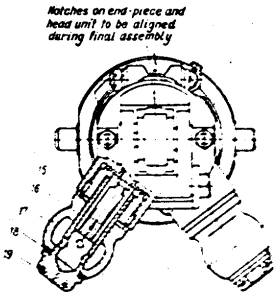

Fig 39 Hydraulic Boosters 5V-1V and 5V-1M Assembly Drawing

1-link, 2-shackle, 3-head unit, 4-adjusting washer, 5-bushing, 6-ring, 7-valve unit, 8-plug, 9-screw, 10-cotter pin (1.5 x 16), 11-slide valve unit, 12-piston unit, 13-seal unit, 14-end-piece, 15, 16, 24, 39, 40, 41 and 42-sealing rings, 18-filter, 19-swivel nipple, 19-pipe connection, 20-lock nut, 21-lock, 22-needle, 23-cylinder, 25-cylinder bushing, 26-nut, 27-coupling bolt, 28-lock, 29-screw, 30-cotter pin (1.5 x 20), 31-screw, 32-stop, 33-nut, 34 and 35-bolts, 36-castle nut, 37-washer, 38-plug, 43-screw.

Declassified in Part - Sanitized Copy Approved for Release 2012/01/04 : CIA-RDP80T00246A062100120001-8

Declassified in Part - Sanitized Copy Approved for Release 2012/01/04 : CIA-RDP80T00246A062100120001-8

posit
be su

is no
ailer
appli
syste

rods

hydra
which
in th
hydra
opera
or le
effor
locat

cylin
rod.

(Fig.
rod (
passe
and a

bottc
attac

is an end-face cover of the cylinder and is connected with the latter by means of two projections on the bushing which fit into the corresponding slots on the cylinder. The bushing-to-cylinder joint is locked by means of screws 3.

The cylinder-to-bushing joint is sealed tight by rubber ring 24 (Fig.39).

The end plate and the bushing of the cylinder are provided with holes for the rods of piston unit 12. The necessary tightness is ensured by sets of rubber collars 13 (seal unit) with leather rings 42, round rubber rings 39 and two leather rings 40 inserted into the recess of the cylinder and the bushing.

The purpose of the leather rings is to make the rubber seals more wear-resistant.

The cylinder and the cylinder bushing are manufactured of alloy steel 12XH3A. To improve the wear-resistant quality and to prevent scores and seizing, the friction surfaces are subjected to case-hardening. To protect the outer surfaces from corrosion, the surfaces are cadmium-plated.

The piston serves as operating rod by means of which the effort of the hydraulic fluid is transmitted to the ailerons through a system of levers. This unit consists of piston 1 (Fig.41) with press-fitted sleeve 2, two pairs of plungers 3, rod 4 and a number of small parts. The piston unit incorporates a distributing mechanism.

Piston 1 is a hollow rod carrying a threaded piston head. The latter has two channels to supply the operating fluid from the delivery line to the middle recess of distributing slide valve 11 (See Fig.39).

The operating fluid is delivered through special channels to a calibrated hole which accommodates metering needle 22.

Two other holes house two cross-feed plungers 3 each (See Fig.41). The cavity between the plungers also communicates with the delivery line, due to which the plungers are in the

Declassified in Part - Sanitized Copy Approved for Release 2012/01/04 : CIA-RDP80T00246A062100120001-8

Declassified in Part - Sanitized Copy Approved for Release 2012/01/04 : CIA-RDP80T00246A062100120001-8

extreme positions covering the channels which interconnect the cylinder cavities. The circular groove on the piston head accommodates rubber ring 7 and two leather rings 6 which divide the cylinder in two cavities.

Pressed-in sleeve 2 (See Fig.41) makes one unit with the piston. Circular recess "Д" between the piston rod and the sleeve serves for delivery of the operating fluid from the delivery line to the distributing slide valve.

The inner cavity of the sleeve is made stepped. The cavity of the smaller diameter receives the distributing slide valve, while cavity "в" serves for the return of the fluid from the hydraulic booster.

The external surface of the cavity of a smaller diameter has three circular grooves. The middle groove connects cavity "ж" (Fig.39) with fluid supply circular cavity "Д" through the radial holes and channel "а". The extreme right groove serves to connect the left cavity of the cylinder through channel "г" with a pair of radial ports lined up with the right middle collar of the slide valve. The extreme left groove serves to connect the right cavity of the cylinder through channel "б" with a pair of radial ports lined up with the left middle collar of the slide valve. To ensure the required overlap of the slide valve pair, the width of their ports and their mutual arrangement are within 0.02 - 0.03 mm.

The outer surface of the piston is threaded on one side to receive hydraulic booster head 3 (Fig.39); the two holes made here in the piston serve for connection with the delivery and return lines. The other end of the piston is connected with rod 4 (See Fig.41) through a thread joint.

The rod is a hollow cylinder with a recess for lightening purposes; the female thread at both ends of the rod serves for connecting the rod with end-piece 14 (See Fig.39) and the piston. The sealing between the piston and the rod is effected by means of rubber ring 5 (See Fig.41).

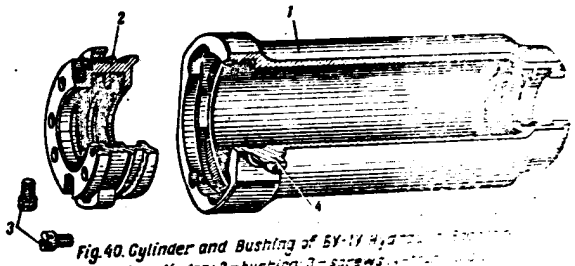

Fig.40. Cylinder and Bushing of BY-17 Hydr[illegible]
1-cylinder; 2-bushing; 3-screws [illegible]

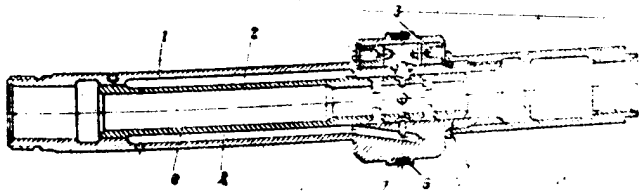

Fig.41. Piston Unit (Operating Rod)
1-piston; 2-sleeve; 3-plungers; 4-rod; 5, 6 and [illegible]

Declassified in Part - Sanitized Copy Approved for Release 2012/01/04 : CIA-RDP80T00246A062100120001-8

Declassified in Part - Sanitized Copy Approved for Release 2012/01/04 : CIA-RDP80T00246A062100120001-8

To provide for the locking of the threaded joint, the collar of the rod has 18 slots, while the end face surface of the piston head is provided with a threaded hole. The joint is locked by means of screw 43 (See Fig.39).

The sleeve of the piston unit accommodates slide valve unit 11, which regulates the delivery of the operating fluid and the return of the fluid from the cylinder cavities.

The slide valve (distributing rod) consists of slide valve 9 (Fig.42), a hinge joint and end-piece 1.

Slide valve 9 is a hollow rod with four collars and a number of radial holes for the return of the operating fluid from the hydraulic booster to the return line.

To ensure the necessary overlap of the ports (within 0.2 - 0.3 mm) the mutual arrangement and the length of middle collars are made within ±0.02 mm. The edges of the middle collars must not be deformed or rounded so as not to disturb the necessary overlap.

In view of the fact that the overlap value is very small, the tightness in the slide valve-to-sleeve joint is ensured by a careful surfacing of the friction surfaces and by matching the slide valves and sleeves to one another so that the diametral clearance between them is within 0.007 - 0.012 mm.

The hole at the right end of the slide valve houses a damper which is essentially a return valve. The purpose of the damper is to eliminate a possible disbalance in the slide valve pair by filling the closed space in the hydraulic booster rod with the operating fluid.

The damper consists of body 12, steel ball 11, threaded plug 13 and washer 10.

The slide valve is thread-joined with the hinge which consists of turn-buckle 6, extensions 7 with spherical heads, nuts 8, spherical seats 4, two lock nuts 2 and pins 3. Spherical seats 4 take the thrust of the heads of extensions 7. The extensions are connected with slide valve 9 and end-piece 1.

Declassified in Part - Sanitized Copy Approved for Release 2012/01/04 : CIA-RDP80T00246A062100120001-8

Declassified in Part - Sanitized Copy Approved for Release 2012/01/04 : CIA-RDP80T00246A062100120001-8

End-piece 1 is a guide rod with a shaped flange. The end-piece has a fork with holes for bolt 34 (See Fig.39) by means of which the slide valve unit is connected with control bell crank through shackle 2.

The other end of the end-piece is provided with a thread to receive the nut of the hinge joint.

This construction of the distributing rod makes it possible to adjust the slide valve position in the sleeve and compensates for axial misalignment of the seats for the slide valve and the end-piece.

The head unit serves for the connection of the distributing rod with control levers and allows to adjust the slide valve unit position relative to the distributing ports of the piston sleeve.

The head unit includes head 1 (Fig.43) and bushing 2. The head has a complicated shape and is essentially a bushing with a hollow flange and a bracket at one end and a female thread at the other.

Two stops 3 screwed into the faces of the head flange from both sides limit axial motion of the flange of the end-piece linked with the distributing slide valve.

The head unit is connected with the rod of piston 12 (See Fig.39) by means of a thread. Adjusting washer 4 is selected and installed between the end faces of the head and the piston to ensure a definite position of the head relative to the piston and to keep the hydraulic booster size within the rated limits.

The position of the head relative to the piston rod is fixed by lock screw 31. Upon the completion of adjustment of the distributing rod travel (slide valve unit), nuts 33 of the stops are stop-soldered.

The yoke unit serves for the delivery of the operating fluid to the hydraulic booster from the delivery line and for

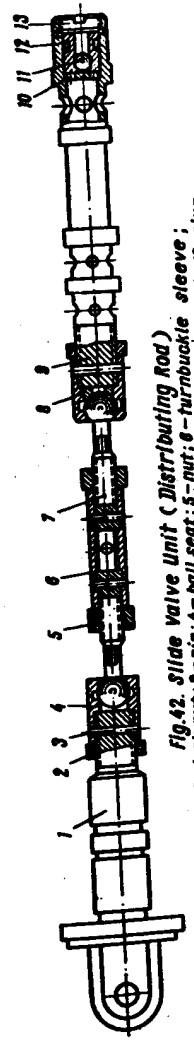

Fig.42. Slide Valve Unit (Distributing Rod)

1-end-piece; 2-lock nut; 3-pin; 4-ball seat; 5-nut; 6-turnbuckle sleeve; 7-extension; 8-nut; 9-slide valve; 10-washer; 11-ball; 12-damper body; 13-plug.

Declassified in Part - Sanitized Copy Approved for Release 2012/01/04 : CIA-RDP80T00246A062100120001-8

Declassified in Part - Sanitized Copy Approved for Release 2012/01/04 : CIA-RDP80T00246A062100120001-8

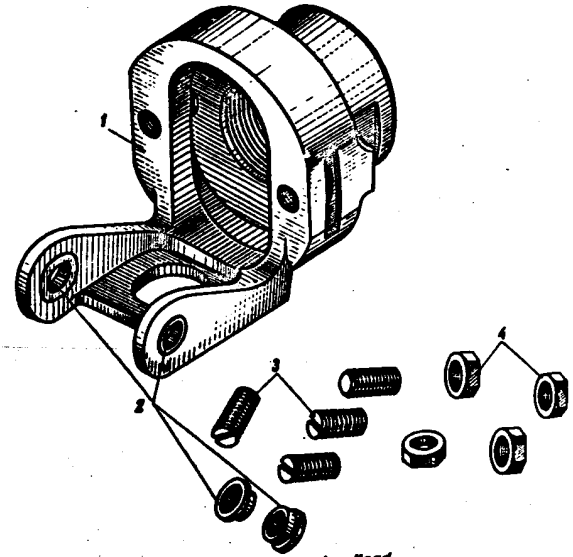

Fig. 43. Booster Head
1—head; 2—bushings; 3—stops; 4—nuts.

Declassified in Part - Sanitized Copy Approved for Release 2012/01/04 : CIA-RDP80T00246A062100120001-8

Declassified in Part - Sanitized Copy Approved for Release 2012/01/04 : CIA-RDP80T00246A062100120001-8

the return of the fluid to the return line.

The yoke unit consists of yoke 1 (Fig.44), sleeves 3, bushings 2 and pins 4. Yoke 1 is a bushing which has a slot throughout its whole length and two bosses. The outer surface has two pairs of lugs with holes for coupling bolts 27 (See Fig.39), located near the slot.

The holes in the yoke bosses which line up with the holes in the piston rod during the installation of the yoke serve for the delivery of the operating fluid to the hydraulic booster and for the return of the fluid from the booster. The bosses receive thin-walled bushings 2 (See Fig.44) and threaded steel sleeves 3 which are locked in place with pins 4. Bushings 2 inserted in the yoke holes serve to keep off rubber from bulging into the fluid inlet and outlet holes.

The yoke is fitted on the piston rod and is tightened with coupling bolts. The joint between the piston rod and the yoke is made tight by rubber gasket 8 (See Fig.39).

The assembly arrows made on the yoke bosses indicate the places of connection of the delivery and return lines.

Screen filter 16 arranged inside pipe connection 15 serves to additionally clean the hydraulic fluid.

The hydraulic booster is connected with the aircraft control rods by means of link 2, shackle 3 and end-piece 14.

The link is hinged with the hydraulic booster rod by means of bolt 35. Shackle 3 which is fastened to the distributing rod of the slide valve and to bolt 35 is interconnected together with link 1 to the bolt mount of the aircraft stick leverage.

End-piece 14 is threaded into the end of the piston unit (operating rod) and is locked in position by means of lock nut 20 and lock 21.

The end-piece joints the hydraulic booster to the aircraft control unit leverage.

Declassified in Part - Sanitized Copy Approved for Release 2012/01/04 : CIA-RDP80T00246A062100120001-8

Declassified in Part - Sanitized Copy Approved for Release 2012/01/04 : CIA-RDP80T00246A062100120001-8

Hydraulic boosters БУ-1М and БУ-1М-РВ differ from the БУ-1У type boosters by the fork unit, more sturdy trunnions of the cylinders, wider service collars and by the distributing rod slide valve whose collars are made without flats so as to improve speed characteristics.

Besides, the design of the needle of hydraulic boosters БУ-1М-РВ has been altered; the flat of the needle is made asymmetric. This fact calls for attention during assembly of the БУ-1М-РВ unit, so that the extended cylindrical end of the needle mounted in the piston is located on the side of the head.

The swivel nipple of the БУ-1М-РВ hydraulic booster is shifted through 180° relative to the nipple of hydraulic boosters БУ-1У and БУ-1М.

VI. INSTALLATION AND MAINTENANCE INSTRUCTIONS

1. Delivery Set

The hydraulic boosters shipped off by the Manufacturing Plant to the Consumers are fully assembled, coated with corrosion-preventive compound and packed in special cases in paraffine paper.

Alongside with the hydraulic booster, the case contains:

(a) technical papers (Hydraulic Booster Service Log, Delivery List);

(b) set of spare parts for one hydraulic booster;

(c) set of erecting tools.

Besides, each 10 hydraulic boosters sent to the Consumer are provided with a group set of spare parts.

2. Installation of Hydraulic Booster on Bracket and Checking Standard of Installation

Normal operation of a hydraulic booster depends to a great extent on proper installation of the booster on the air-

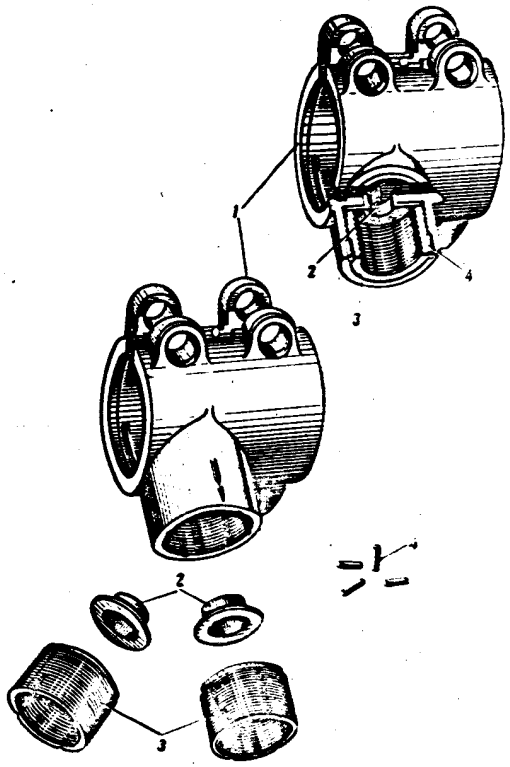

Fig. 44. Booster Yoke
1 - yoke; 2 - bushings; 3 - threaded bushings; 4 - pins.

Declassified in Part - Sanitized Copy Approved for Release 2012/01/04 : CIA-RDP80T00246A062100120001-8

Declassified in Part - Sanitized Copy Approved for Release 2012/01/04 : CIA-RDP80T00246A062100120001-8

craft. Misalignment, jamming and excessive friction in hinge joints of the reversible system may be the cause of abnormal operation, for instance, of the control stick or pedal creeping.

In order to ensure a proper installation of the hydraulic booster and to check the installation for quality, it is good practice to mount the hydraulic booster on a special bracket and then to install it together with the bracket on aircraft. The bracket must be a sufficiently rigid panel on which the hydraulic booster is installed together with the reversible system (See Fig.5).

It is not advisable to mount the hydraulic booster on a bracket consisting of two parts as this may result in scores on the operating rod and cause the aircraft control stick creeping due to misalignment in the reversible system. The design of the bracket, however, which is accepted in helicopters does not meet these requirements as the hydraulic booster together with the front bell crank is mounted on one bracket, while the rear bell crank linked with the reverse rods is mounted on another bracket.

Prior to installing a hydraulic booster on a bracket remove the anti-corrosive compound from the booster in compliance with appropriate instructions.

After this the hydraulic booster of the БУ-1У type should be checked manually for ease of the operating rod travel. Besides, it is necessary to check the booster head and all the bolts for presence of seals and locks.

All the parts of the booster mounting bracket must meet the following requirements:

(a) all hinge joints must be parallel with the axis of the booster bell crank;

(b) the panel must be sufficiently rigid ensuring a reliable installation of the hydraulic booster and of all the units of the reversible system;

Declassified in Part - Sanitized Copy Approved for Release 2012/01/04 : CIA-RDP80T00246A062100120001-8

Declassified in Part - Sanitized Copy Approved for Release 2012/01/04 : CIA-RDP80T00246A062100120001-8

(c) planes of rocking of all hinge joint elements must be aligned with the plane of rocking of the hydraulic booster.

When installing the hydraulic booster and all associated parts on the bracket, it is necessary to comply with the following requirements:

(a) the connection of all ears with forks of all hinge joints must be free of jamming and rubbing throughout the whole range of the operating rod travel;

(b) tightening of hinge joint bolts must not increase friction of the mating parts. The bolts of all hinges must enter the holes under a manual effort in any position and throughout the whole range of travel of the operating rod.

Upon the completion of the installation check the standard of erection throughout the whole range of travel. For this purpose:

(a) make sure that there is no seizure or play between the ears and forks in all hinge joints;

(b) check to see that the booster head is positioned correctly relative to control levers;

(c) check to see that the notches on the distributing rod and the slide valve body or head are in line, which testifies to a correct installation of the distributing rod;

(d) check all joints for correct locking;

(e) check the standard of erection by reproducing the service movements which are characteristic of the aircraft (helicopter). If the booster is meant for a permanent control system where the control stick or pedal creeping is highly undesirable, the check should include a test of the control stick or pedals for possible creeping.

If the hydraulic booster is mounted in the periodic control system, such checking is not necessary. For example, the helicopter collective pitch control consists in a periodic shifting of the lever on the control sector in accordance with the desirable change of the collective pitch.

The term "creeping" is applied to the motion of the control stick or control pedals which continues after the cessation of light jerks applied to the control stick or pedals to shift them with the booster hydraulic system switched on. The force which must be applied in order to stop this motion of the control stick or pedals must not exceed the maximum value set for the given aircraft. For example, the Specifications for checking the standard of erection of БУ-1У hydraulic booster contain the following paragraph: "In view of the damping force of the hydraulic booster slide valve, the control stick after being shifted to the left is allowed to continue its motion if it can be stopped by an effort up to 260 gr. If the control stick is shifted to the right, the effort must not exceed 100 gr."

The creeping in all cases is caused by a disturbed relation between two forces: the force of friction in the mechanical control linkage from the control stick or pedals to the hydraulic booster and the total force of friction in hinge joints of the hydraulic booster reversible system and hydraulic booster slide valve.

The creeping may be completely absent only if the total force of friction in the reversible system hinge joints and the force of the slide valve friction are less than the total force of friction in the control linkage between the control stick or pedals and the hydraulic booster. This relation is as a rule taken into account by the designers of the aircraft (helicopter) control system.

Not rarely, the creeping of the control stick or pedals is confused with spontaneous motion of these elements to either side. These defects are absolutely different from each other by their nature and consequences.

The creeping causes an excessive strain on the pilot and results in his fatigue. As safety is concerned, however, the creeping is absolutely harmless.

Declassified in Part - Sanitized Copy Approved for Release 2012/01/04 : CIA-RDP80T00246A062100120001-8

Declassified in Part - Sanitized Copy Approved for Release 2012/01/04 : CIA-RDP80T00246A062100120001-8

On the other hand, spontaneous motion of the control stick or pedals to one or the other side is due to the presence of a hard foreign object in the clearances which determine movement of the slide valve relative to the operating rod. Spontaneous motion of the control stick or pedals results from incorrect operation of the hydraulic booster and often has undesirable consequences.

In hydraulic boosters БУ-10 foreign objects are likely to get into the clearance between the head bracket and bushings 47 (See Fig.13), in hydraulic boosters БУ-13М - the clearance between the head bracket and bushings 43 (See Fig.30). These clearances are protected by felt glands. In hydraulic boosters БУ-1У the vulnerable place is the slot in head 3 (See Fig.39) between stops 32 where the end-piece flange is located. The head of the hydraulic booster БУ-1У is protected by a special cover. In service special care should be exercised towards the condition of this cover; during the installation of these boosters it is necessary to make sure that the cover is securely fastened on the booster head.

In the case of hydraulic boosters БУ-10 it is necessary to prevent the possibility of foreign particles getting inside the inner cavity and beyond the gland and to make sure that the felt gland is installed correctly.

Before flight be sure to check the hydraulic booster for operation by shifting the control stick or control pedals three or five times through the whole length of their travel with the hydraulic booster in operation.

The check for creeping is carried out on a special installation whose kinematic diagram and hydraulic system fully correspond to those of the aircraft with the load cut off and spring feel mechanism inoperative.

The control stick or pedals of the testing installation must be statically balanced. In those cases when the check

is carried out on aircraft it is necessary to take into account the disbalance of the control stick.

The friction in the linkage from the control stick to the hydraulic booster should be adjusted so that the total value of the friction force is not less than the minimum possible total value of friction in the aircraft taking into account the friction resulting from sealing and sagging of the rods.

In those cases when the creeping is out of the permissible limits it is necessary to check the force of the distributing rod friction. If the slide valve travel is difficult, remove the slide valve, wash with clean non-ethylated gasoline all service surfaces of the slide valve and the damper and wipe with chamois and dry the inner cavity of the sleeve till gasoline is completely evaporated.

After that moisten all service surfaces of the slide valve and the sleeve in the hydraulic fluid, install the slide valve back into the sleeve and check the hydraulic booster for proper operation.

Note: When carrying out the above procedures, exercise particular care towards the condition of the locks of turnbuckle joints and distributing rod travel adjusting screws; take special care to protect the service collars of the slide valve from notches, scratches and scores.

3. Installation of Hydraulic Booster on Aircraft

1. When mounting the hydraulic booster installed on the bracket, ensure a clearance not more than 0.05 mm between the bracket lugs and the bearing plate.

2. Do not install bolts (in joints) with interference; the bolts must be inserted manually.

Declassified in Part - Sanitized Copy Approved for Release 2012/01/04 : CIA-RDP80T00246A062100120001-8

Declassified in Part - Sanitized Copy Approved for Release 2012/01/04 : CIA-RDP80T00246A062100120001-8

3. When connecting flexible hoses pay attention to the arrows on pipe connections. The supply hose should be connected to the pipe connection on which the arrow pointer is directed towards the booster inside, whereas the return hose should be connected to the pipe connection on which the arrow points away from the booster. Connecting and disconnecting the operating fluid supply hoses, prevent the hydraulic booster from turning around the operating rod and from being unlocked.

4. The control system should be adjusted in such a way as to provide for a neutral position of the controlled units and control elements within the tolerance limits for the given aircraft when the booster operating rod is in the neutral position. The maximum deviation of the controlled units must be limited not by the hydraulic booster, but by special stops in the system of rods.

5. Check the entire control system for smooth motion with controlled units completely disconnected; seizure is not permissible.

6. When installing the spring feel mechanism, see that the ear of the mechanism fits smoothly into the lever pin and does not cause tension of the mechanism springs in the neutral position.

7. Switch on the pump and check the controlled units for deflection through full angles; the control stick is allowed to be short of, or beyond, the neutral position within the tolerance limits set for the given aircraft.

8. Check the position of the spring feel mechanism. Disconnect the spring feel mechanism, set the controlled units in the neutral position and, with the control stick free, and the hydraulic system under pressure, connect the spring feel mechanism to the control lever without tightening the mechanism springs.

9. Check the control stick for creeping with the pump in operation. In case of creeping, check the hinge joints of the bracket for misalignment or rubbing, the operating rod for correct position relative to the control lever, and whether friction of the hydraulic booster distributing rod can be felt by hand.

Rubbing or misalignment should be eliminated by adjusting clearances in the joints and by dismounting the hydraulic booster on the aircraft; friction of the slide valve is eliminated by washing and cleaning the slide valve and its damper as well as the hydraulic booster sleeve.

10. When carrying out scheduled maintenance of the hydraulic booster or when replacing the booster by a new one, remove the booster in the following sequence:

(a) turn off pressure in the booster hydraulic system and disconnect the delivery and return hoses;

(b) disconnect the hydraulic booster from the control rod and reinstall the bolt connecting the rods with the hydraulic booster; remove the bolt connecting the operating rod with the aircraft control rods;

(c) unscrew the nuts fastening the bearing races in the cylinder trunnions;

(d) remove the hydraulic booster from the bracket.

4. Operation and Maintenance

Maintenance of the hydraulic booster during its service consists in supervision of the booster operation, inspections of seals, checking of operating fluid and the whole hydraulic system for cleanliness, as well as in the performance of scheduled maintenance procedures.

During operation of the hydraulic booster the surfaces of the operating rod, the slide valve and the stop may get covered with a film of fluid which gradually gathers into

Declassified in Part - Sanitized Copy Approved for Release 2012/01/04 : CIA-RDP80T00246A062100120001-8

Declassified in Part - Sanitized Copy Approved for Release 2012/01/04 : CIA-RDP80T00246A062100120001-8

drops; such formation of drops may be tolerated.

Permissible leakage of hydraulic fluid during booster operation:

(a) with the hydraulic system ON, for boosters БУ-10 and БУ-13М: up to 4 cm^3/hour, which amounts to two drops per minute; and for boosters БУ-1У: up to 5 cm^3/hour, which amounts to 3 - 4 drops per minute. The hydraulic booster should be checked for leakage when the booster is operated from the aircraft pump or from a ground source; before the check the hydraulic booster should be wiped clean;

(b) with the hydraulic booster out of operation and the hydraulic system OFF, 5 drops per hour.

When checking the booster for tightness, it is necessary to bear in mind that after a prolonged period of hydraulic booster inoperation (more than 10 - 15 days), the rubber cups and rings lose their elasticity and packing quality, though they ensure a complete tightness of the booster during its operation. To restore elasticity, let the hydraulic booster operate under pressure for 10 - 15 minutes, using for this purpose a special installation or timing this procedure with the scheduled run of the engine.

When filling the reservoir with fluid, do not under any circumstances mix АМГ-10 fluid with any other oils. The vessels (tanks, funnels, hoses) used for filling the hydraulic fluid, must be absolutely clean. Before the procedure the vessels should be washed with gasoline and dried in the air, and the operating fluid must be filtered through silk cloth.

It is not allowed to lubricate the internal parts of a hydraulic booster operating on АМГ-10 oil with any other lubricants.

The temperature of the operating fluid in the hydraulic system must be not more than +60°C.

Prior to connecting the hydraulic booster to the hydraulic system, prime the entire system from a ground truck. Proceed as follows:

(a) connect the delivery and return hoses to each other;

(b) pump the hydraulic fluid filled into the system in the course of 5 - 8 minutes with the hydraulic booster disconnect cock open;

(c) switch over the automatic valve 10 times with the hydraulic booster disconnect cock closed, after which drain the fluid from the system.

Upon the completion of the above procedures, connect the hoses to the hydraulic booster, prime fresh fluid and shift the control stick several times through the whole length of its travel with the ground pump connected or the engine running.

Disassembly of the hydraulic booster should be performed only if it is absolutely necessary: in case of a leaky or disadjusted hydraulic booster, excessive friction in the distributing or operating rods; before disassembly make sure that there is no misalignment or seizure in the lever system.

The hydraulic booster is disassembled on a clean table covered with paraffine paper. It is allowed to assemble only one booster on the work table in order to prevent confusion of booster parts.

In case of a prolonged interval in operation of hydraulic boosters installed on aircraft it is necessary to test the hydraulic boosters in not less than every 10 days from a ground truck in the course of 5 - 10 minutes. When dealing with hydraulic boosters БУ-13М, check the operation of both the main and the duplicate slide valves.

To check operation of the hydraulic booster from the duplicate slide valve, it is necessary to jam the main slide valve with the help of a special device in the following way: fit limiter 3 (Fig.45) on the journal of the main slide valve and, shifting the cover aside, open the hole in the plug. After that fit the clamp with special slots on the head and nut of the main slide valve bolt and turn in clamp screw 2

Declassified in Part - Sanitized Copy Approved for Release 2012/01/04 : CIA-RDP80T00246A062100120001-8

Declassified in Part - Sanitized Copy Approved for Release 2012/01/04 : CIA-RDP80T00246A062100120001-8

so that its end enters the plug hole. After that slightly tighten up the screw and clamp the limiter installed before between the end faces of the main and duplicate slide valves. This will ensure operation of the hydraulic booster from the duplicate slide valve.

The set of tools includes one limiter and a clamp with a screw for each hydraulic booster БУ-13М. This limiter and the clamp serve at the same time for checking operation of hydraulic boosters БУ-14М and БУ-14МС.

VII. HYDRAULIC BOOSTER AND AIRCRAFT CONTROL SYSTEM TROUBLE SHOOTING

Trouble	Cause	Remedy
1. Creeping of control pedals or control stick (with spring feel mechanism switched off), unstable position of control stick in neutral (with spring feel mechanism switched off)	(a) Incorrect installation of hydraulic booster on bracket (b) Excessive friction of distributing rod (c) Insufficient preliminary tension of springs of spring feel mechanism. Each of the above causes may bring about an increase of the total friction in the hinges of the reversible system	Check: (a) Clearances between lugs and forks in hinge joints of reversible system at all positions of operating rod (b) Bolts in hinge joints for over-tightening (c) Hydraulic booster-to-bell crank connection (d) Preliminary tension of springs of spring feel mechanism (e) Distributing rod of hydraulic

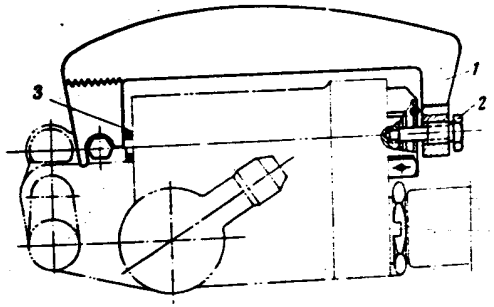

Fig.45. Fixture for Checking Operation of БУ-13М Hydraulic Booster Duplicate Slide Valve
1-clamp; 2-screw; 3-limiter.

Declassified in Part - Sanitized Copy Approved for Release 2012/01/04 : CIA-RDP80T00246A062100120001-8

Declassified in Part - Sanitized Copy Approved for Release 2012/01/04 : CIA-RDP80T00246A062100120001-8

Trouble	Cause	Remedy
	and the friction of the slide valve as compared with the total friction of the linkage between the control stick and the hydraulic booster, with a resultant disbalance between the friction forces which is required for normal operation	booster for easy motion. If the distributing rod moves with difficulty, wash the rod and sleeve (the seat under the slide valve) with clean gasoline and wipe with clean cloth or chamois. After that, coat the distributing rod and sleeve with operating fluid and assemble them in accordance with the prescribed procedure. When performing these operations, see that the locking devices of joints are intact and protect the service collars of the slide valve from scratches. Connect the control linkage and check operation of the hydraulic booster on the ground

Declassified in Part - Sanitized Copy Approved for Release 2012/01/04 : CIA-RDP80T00246A062100120001-8

Declassified in Part - Sanitized Copy Approved for Release 2012/01/04 : CIA-RDP80T00246A062100120001-8

Trouble	Cause	Remedy
2. Binding of control stick in extreme positions	Hindrance in control system between controlled surfaces and hydraulic booster	Eliminate hindrance in control system by rod adjustment
3. Difficult motion of control stick or pedals in one direction	(a) Foreign objects in clearances which determine slide valve travel: clearance between end-piece flange and booster head faces in hydraulic booster БУ-1У; clearance between bushing of coupling bolt and hole in head bracket, also clearance between taper surface of stop and bell crank bushing in hydraulic booster БУ-10 (b) Distributing device of hydraulic booster out of adjustment	In case of hydraulic boosters БУ-1У, remove cover from booster head and thoroughly clean cover and head of dirt and foreign objects. In case of hydraulic boosters БУ-10, remove coupling bolt, back out both shackles through some angle and clean clearances between bushing and hole in head bracket. If there are no foreign objects, check operation of hydraulic booster under pressure. If fault still persists, remove hydraulic booster and check distributing rod for correct adjustment
4. Difficult motion of control stick (or pedals)	(a) Excessive friction in hinges of rods and control	(a) Check all joints by sections. Check connection of

Trouble	Cause	Remedy
at some sections of their travel	levers at section from control stick (or pedals) to hydraulic booster slide valve (b) Overtightened bolts of hinges of hydraulic booster and control bell cranks	control bell crank with hydraulic booster head (b) Bolts must enter smoothly in place under manual effort or under light impact of wooden mallet
5. Jerks of control stick (or pedals) at some sections of their travel; same during change of direction of piston motion	See Item 1. Backlash in rods and levers of control system	See Items 1 and 3. Disconnect hydraulic booster and check for backlash; eliminate backlash if any
6. Distributing rod moves with difficulty	(a) Contamination of working surfaces of piston and cylinder (b) Excessive friction of rubber cups	(a) Unscrew cylinder ear (or bushing) and nut, remove cylinder Wash piston and cylinder in non-ethylated gasoline, dry, coat with operating fluid and reinstall in position (b) Replace rubber cups

Declassified in Part - Sanitized Copy Approved for Release 2012/01/04 : CIA-RDP80T00246A062100120001-8

Declassified in Part - Sanitized Copy Approved for Release 2012/01/04 : CIA-RDP80T00246A062100120001-8

Trouble	Cause	Remedy
7. Hydraulic booster fails to ensure maximum effort	(a) Heavy drop of pressure in supply line (b) Excessive back-pressure in return line (c) Worn sealing ring on piston	(a) Wash or replace felt filters in supply line (b) Check pressure at booster outlet, for which purpose disconnect return hose from hydraulic booster. Place vessel under pipe connection, increase pressure in hydraulic booster and check its operation with spring feel mechanism disconnected. If hydraulic booster operates normally, it indicates that pressure in return line was too high because of some defect (clogging or clamping of pipes, incorrect connection of pipes) (c) Replace sealing ring on piston
8. Leakage through pipe connections	(a) Loose thread joints (b) Leaky rubber seals	(a) Check pipe connections or cylinder nut for proper tightening

Trouble	Cause	Remedy
		moment. If fault persists, replace gaskets (b) Check rubber sealing rings
9. Leakage of hydraulic fluid around piston rod, slide valve or stop (in excess of limits indicated in paragraph "Operation and Maintenance")	Wear of sealing cups or rubber rings	Replace set of cups or sealing rings on slide valve
10. Control stick stops in position other than neutral	Spring feel mechanism out of adjustment	Disconnect spring feel mechanism, set controlled elements in neutral position with free control stick (or pedals) and increase pressure (from auxiliary unit) in hydraulic system, after which connect spring feel mechanism to control lever without tensioning spring; eliminate spring tension if any

Declassified in Part - Sanitized Copy Approved for Release 2012/01/04 : CIA-RDP80T00246A062100120001-8

Declassified in Part - Sanitized Copy Approved for Release 2012/01/04 : CIA-RDP80T00246A062100120001-8

VIII. SCHEDULED MAINTENANCE

1. Scheduled Maintenance

of Hydraulic Boosters БУ-10 and БУ-13М

A. Pre-Flight and Post-Flight Inspections:

(a) Check operation of the hydraulic booster with the hydraulic system disconnected and connected by shifting the control stick two or three times in both directions throughout the whole operating range; in case of hydraulic boosters БУ-10Б and БУ-10М repeat the same by engaging and disengaging the duplicate system. The control stick must move without jerks and creeping.

(b) When attending to hydraulic boosters БУ-13М, check operation of the duplicate slide valve after every 10 flying hours but not less than once a fortnight.

(c) Examine attachment of the hydraulic booster to the bracket and check the rods and pipe lines for reliable connection to the hydraulic booster.

B. After Every 25 Flying Hours or after Every 3 Months if Aircraft Is Not Flown:

(a) Carry out scheduled maintenance within the scope of pre-flight and post-flight inspections.

(b) Make sure that there is no increase of longitudinal play in hinge joints of the distributing rod. With this purpose, holding up the upper part of the bell crank, move the slide valve along its axis on the side of the cap (with the cap removed). If the joint is sound, motion of the slide valve is practically imperceptible. Should the clearance be too large, send the unit to a repair shop.

(c) Remove the filters mounted in fluid supply pipe connections, examine them and wash in clean non-ethylated gasoline.

In case of clogged filters, remove the hydraulic booster from the aircraft and thoroughly wipe it with a cloth slightly moistened in non-ethylated gasoline. Disassemble the distributing device, for which purpose, in case of БУ-10 boosters, disconnect the hinge unit from the slide valve, remove the plug from the damper unit, remove the slide valve body and take out the slide valve. When dealing with БУ-10Б and БУ-10М hydraulic boosters, disassemble in addition automatic delivery and drain valves. In boosters БУ-13М remove the main and duplicate slide valves, take off rubber rings, wash them thoroughly with clean non-ethylated gasoline, dry and wipe with chamois. Examine the middle collars of the slide valve; the collars must be free of notches and scratches. Hinge joints must ensure free turning of parts.

If no defects are evidenced, coat the washed parts with the operating fluid and reinstall them in position. If inner cavities of slide valve units are contaminated, send the hydraulic booster to a repair shop for complete disassembly of the head unit and the power cylinder.

Notes: 1. Disassembly and assembly of hydraulic boosters should be carried out in closed premises on a clean table covered with paraffine paper.

2. If the plane (helicopter) is not flown, pump the fluid through the hydraulic booster using the aircraft pump or a ground installation after every 10 days, for which purpose build up working pressure and shift the control stick not less than 5 - 10 times throughout the entire operating range.

C. After Every 100 Flying Hours or after Every 6 Months if Aircraft Is Not Flown:

(a) Carry out the operations prescribed for 25 hour maintenance.

Declassified in Part - Sanitized Copy Approved for Release 2012/01/04 : CIA-RDP80T00246A062100120001-8

Declassified in Part - Sanitized Copy Approved for Release 2012/01/04 : CIA-RDP80T00246A062100120001-8

(b) Drain the operating fluid from the hydraulic reservoir and all the hydraulic system, disconnect pipes and hoses.

(c) Thoroughly wash the hydraulic reservoir and pipe lines with filtered operating fluid and fill all the hydraulic system with fresh filtered fluid. Prior to usage, in all cases, the hydraulic fluid must be filtered through silk cloth.

2. Scheduled Maintenance of Hydraulic Boosters БУ-1У

A. Pre-Flight Inspection

1. Build up working pressure in the hydraulic system and shift the control stick in various directions several times. The control stick must move smoothly, without creeping and jerks. Check visually the control stick for uniform speed of return from the extreme right and left positions to the middle position.

2. Check operation of the cross-feed system, for which purpose disconnect the booster hydraulic system from the cockpit by means of a cock and repeat movements of the control stick in the same directions. The control stick must move smoothly without excessive effort. Faulty operation of the cross-feed system with the hydraulic booster disconnected will be evidenced by a difficult motion of the control stick.

Note: If the cross-feed system cannot be set right after several motions of the control stick, dismantle the hydraulic booster and send it to a repair shop.

B. Post-Flight Inspection

1. Turn the main filter of the hydraulic system 3 or 5 times.

2. Check to see that there is no leakage of the operating fluid from under the hydraulic booster panel.

C. After Every 25 ±5 Flying Hours:

1. Carry out pre-flight and post-flight inspections.

2. Examine attachment of the hydraulic booster and the control linkage.

3. Check the hydraulic booster head cover for condition (in case of boosters БУ-1, БУ-1У, БУ-1М, БУ-1М-РВ).

If any faults are evidenced, remove the cover and check it thoroughly for cleanliness, after which reinstall the cover in position.

4. Remove the silk and felt filters installed in the hydraulic system and the screen filters installed in the fluid supply pipe connections; examine the filters and wash them in clean non-ethylated gasoline.

If the screen filters installed in the fluid delivery pipe connection are contaminated, remove the hydraulic booster from the aircraft, take out the distributing slide valve unit (also the duplicate slide valve in case of boosters БУ-13М, БУ-14М and БУ-14МС), examine and, if contamination is evidenced, carry out complete stripping and washing of the hydraulic booster; drain operating fluid from the hydraulic tank and the hydraulic system, wash the hydraulic system with operating fluid and fill in fresh fluid.

Upon completing assembly, check the hydraulic booster for:

1. external tightness;

2. suction force which should be not less than 400 grams for boosters БУ-1, БУ-1У, БУ-1М, БУ-1М-РВ and not less than 250 cm^3 for БУ-13М and БУ-14М (БУ-5, БУ-8, БУ-13, and БУ-14 have no suction);

3. uniform speed of motion of the operating rod in either direction;

Declassified in Part - Sanitized Copy Approved for Release 2012/01/04 : CIA-RDP80T00246A062100120001-8

Declassified in Part - Sanitized Copy Approved for Release 2012/01/04 : CIA-RDP80T00246A062100120001-8

4. inner leakage with the piston in neutral position (not more than 1100 cm^3/min. for boosters БУ-1, БУ-1У, БУ-1М, БУ-1М-РВ, and not more than 600 cm^3/min. for other boosters).

Notes: 1. Disassembly and assembly of hydraulic boosters should be carried out in closed premises on a clean table covered with organic glass, textolite or vinyplast.

2. If the aircraft is not flown, pump the fluid through the hydraulic boosters from the aircraft pump or a ground installation after every 10 days, for which purpose build up working pressure and shift the control stick not less than 5 - 10 times throughout the entire operating range.

3. In case of hydraulic boosters БУ-13М, БУ-14М and БУ-14МС check operation of the duplicate slide valve after every 10 flying hours (or after every 10 days if the plane is not flown). With this purpose jam the main slide valve by means of a clamp and yoke and keep on moving the control stick to extreme position within a period of 2 - 3 minutes. The effort required to deflect the control stick in one direction may be greater than in the other direction.

4. When priming the hydraulic system, do not under any circumstances mix the used operating fluid with the fresh fluid.

Replacement of the operating fluid in hydraulic booster systems should be carried out in periods prescribed by appropriate Instructions.

IX. CORROSION-PREVENTIVE TREATMENT AND STORAGE OF HYDRAULIC BOOSTERS

Hydraulic boosters are subjected to corrosion-preventive treatment when they are removed from aircraft before their service life has expired, when they are returned to the Manufacturer for some reason or other and also when they are to be placed for long-term storage in a depot.

Subject to corrosion-preventive treatment are both the inner cavities and external surfaces of the hydraulic booster.

Before applying the corrosion-preventive compound, check the hydraulic booster by external inspection for corrosion and damaged anti-corrosive coating.

1. Corrosion-Preventive Treatment of Inner Cavities

1. Fill the inner cavity of the hydraulic booster with clean operating fluid АМГ-10; the procedure should be performed on a special stand used for corrosion-preventive treatment.

2. Fit caps on the return and delivery pipe connections.

Note: The operating fluid АМГ-10 which is used for filling the inner cavities of hydraulic boosters should be brought to the stand in the Manufacturer's vessels provided with seals.

2. External Corrosion-Preventive Treatment

3. Corrosion-preventive treatment of hydraulic boosters should be carried out in a special room not later than 4 hours after the booster is removed from the aircraft.

4. Wipe carefully the hydraulic booster with a clean cloth moistened in gasoline Б-70 and dry it in the air till the smell of gasoline is no longer felt.

Declassified in Part - Sanitized Copy Approved for Release 2012/01/04 : CIA-RDP80T00246A062100120001-8

Declassified in Part - Sanitized Copy Approved for Release 2012/01/04 : CIA-RDP80T00246A062100120001-8

86

5. When dealing with hydraulic boosters БУ-1У and БУ-1М, move the cylinder to the extreme position, towards the end-piece. In hydraulic boosters БУ-10Б and БУ-10М it is necessary to mask the paint-coated pipes to protect them from the corrosion-preventive compound. If pipes are not masked, the corrosion-preventive compound must be removed from them after completing the treatment.

6. Apply the corrosion-preventive compound in two layers. The first layer should be applied by placing hydraulic boosters in petrolatum heated to a temperature of 70 - 80°C and keeping them there in the course of:

3 - 5 minutes ..... for boosters БУ-1У, БУ-1М, БУ-1М-РВ;
3 - 5 minutes ..... for boosters БУ-10, БУ-10Б, БУ-10М;
4 - 6 minutes ..... for БУ-5А, БУ-8А, БУ-13М, БУ-14М and БУ-14МС boosters

Having cooled the hydraulic booster to 25 - 35°C, apply the second layer of anti-corrosive compound. With this purpose dip the booster into another bath with petrolatum at 55 - 65°C and immediately remove it from the bath.

7. Let the excess compound trickle down, after which place the hydraulic booster on paraffine paper and allow the petrolatum coating to cool down. This done, remove the masking or the corrosion-preventive compound from the pipes of hydraulic boosters БУ-10Б and БУ-10М.

Note: When applying the corrosion-preventive compound, keep inner cavities of the boosters well protected against petrolatum and gasoline.

8. Wrap the hydraulic boosters in 2 layers of paraffine paper and place them in cardboard cases.

9. Paraffine the cases by placing them into a compound consisting of 80 per cent of paraffine and 20 per cent of ceresine heated to a temperature of 70 - 80°C.

10. Pack the hydraulic boosters in wooden boxes.

Note: All the boxes and packing materials for hydraulic boosters must comply with appropriate Specifications.

During the preparation for corrosion-preventive treatment and in the process of the treatment do not take boosters by unprotected hands. Use should be made of clean knitted or cotton gloves, or paraffine paper.

3. Removal from Storage

11. Unpack the hydraulic booster and remove the wrapping paper.

12. Remove the corrosion-preventive compound by placing the boosters in aircraft or transformer oil heated to a temperature of 70 - 80°C and keeping them in the oil in the course of:

7 - 12 minutes ..... for boosters БУ-1У;
9 - 14 minutes ..... for boosters БУ-10Б, БУ-10М and БУ-10;
10 - 15 minutes ..... for boosters БУ-5, БУ-8, БУ-13М, БУ-14М and БУ-14МС.

Wipe the booster with a piece of clean cloth moistened with gasoline Б-70. Wash the booster head in fluid АМГ-10 heated to a temperature of 70 - 80°C in the course of 0.5 - 1 minute.

13. Wipe the hydraulic booster dry with a piece of soft clean cloth.

Note: Do not remove the corrosion-preventive compound from the cylinder bushing-to-cylinder joint surfaces of hydraulic boosters БУ-1У and БУ-1М.

When processing the boosters, keep the booster inner cavity well protected against gasoline and petrolatum.

Declassified in Part - Sanitized Copy Approved for Release 2012/01/04 : CIA-RDP80T00246A062100120001-8

Declassified in Part - Sanitized Copy Approved for Release 2012/01/04 : CIA-RDP80T00246A062100120001-8

14. Drain AMT-10 fluid from the inner cavity of the booster.

4. Storage of Hydraulic Boosters in Depots

15. Hydraulic boosters should be kept in Air Force depots and in the Consumer's store rooms in the Manufacturer's packaging.

16. The store premises must be heated and well ventilated. Relative humidity of the air in the store room must be not over 70 per cent. A short time rise of humidity up to 80 per cent may be tolerated.

The air temperature must be within the range of +10° to +35°C. Sharp fluctuations of the ambient temperature and air humidity are not permissible.

17. The store premises must be separated from production shops and protected against the penetration of various vapours and gases which are likely to cause corrosion. Storage of chemicals, acids, alkalis and storage batteries in one room with hydraulic boosters is not permissible.

18. The windows of the store room must be provided with louvers or screens to protect hydraulic boosters from the action of direct sun rays.

19. Storage of hydraulic boosters in depots must be supervised by a representative of the Inspection Department; he must see to it that materials are subjected to laboratory analyses and that anti-corrosion treatment and storage requirements are duly complied with.

Note: Petrolatum may be substituted by aircraft oils MS-20 or MK-22 (State Standard ГОСТ 1013-49) mixed with 6 - 10 per cent of ceresine and heated to a temperature of 60 - 70°C.

All the materials used for corrosion-preventive treatment must have a Certificate and a laboratory test record certifying that they are fit for use.

A P P E N D I C E S

Declassified in Part - Sanitized Copy Approved for Release 2012/01/04 : CIA-RDP80T00246A062100120001-8

Declassified in Part - Sanitized Copy Approved for Release 2012/01/04 : CIA-RDP80T00246A062100120001-8

APPENDIX 1

Specification of type БУ-10 hydraulic booster units

No.	Description	БУ-10 booster unit	БУ-10Б and БУ-10М booster units	БУ-5А booster unit	БУ-8А booster unit
1	2	3	4	5	6
1	Piston unit	Д02-0	Д02-0	П02-0	К02-0
2	Head unit	Г03-0	Д03-0	П03-0	К03-0
3	Hydraulic booster pipe unit	-	Д04-0 in БУ-10Б Д05-0 in БУ-10М	-	-
4	Bar (unit)	-	-	П04-0	-
5	Fork unit	-	-	-	К04
6	Head sub-unit	Д06-0	Д06-0	П06-0	Д06-0
7	Automatic delivery valve	-	Д07-0	-	-
8	Automatic drain valve	-	Д08-0	-	-
9	Plunger unit	-	-	П07	П07-0
10	Pipe connection unit	-	-	П08	П08-0
11	Bell crank unit	Д09-0	Д09-0	П09-0	Д09-0
12	Slide valve unit	Д10-0	Д10-0	П10-0	П10-0
13	Hinge unit	Д11-0	Д11-0	Д11-0	Д11-0
14	Filter	Д12-0	Д12-0	Д12-0	Д12-0
15	Body sub-unit	Д13-0	Д13-0	Д13-0	Д13-0

Declassified in Part - Sanitized Copy Approved for Release 2012/01/04 : CIA-RDP80T00246A062100120001-8

Declassified in Part - Sanitized Copy Approved for Release 2012/01/04 : CIA-RDP80T00246A062100120001-8

1	2	3	4	5	6
16	Slide valve unit	Д14-0	Д14-0	П14-0	П14-0
17	End piece unit	Д15-0	Д15-0	Д15-0	Д15-0
18	Needle unit	Д16-0	Д16-0	Д16-0	Д16-0
19	Seal unit	БУ-1063Б	БУ-1063Б	БУ-1063Б	БУ-1063Б
20	Cylinder nut wrench	Д20-0	Д20-0	П20-0	Д20-0
21	Assembly cones	Д21-0	Д21-0	Д21-0	Д21-0
22	Hydraulic booster assembly	Г00-0	Д00-0	П00-0	К00-0
23	Hydraulic booster overall drawing	Г01-0	Д01-0	П01-0	К01-0

Specification of type БУ-10 hydraulic booster parts

No.	Description	БУ-10, БУ-10Б and БУ-10М booster parts	БУ-5А booster part	БУ-8А booster part
1	2	3	4	5
1	Locking	Д00-1	Д00-1	Д00-1
2	Locknut	Д00-2	Д00-2	Д00-2
3	Cylinder	Д00-3	П00-3	К00-3
4	Sealing ring	Д00-4	П00-4	Д00-4
5	Cylinder nut	Д00-5	П00-5	К00-5

1	2	3	4	5
6	Sealing ring	Д00-6	П00-6	П00-6
7	Sealing ring	Д00-7	П00-7	-
8	Sealing ring	Д00-8	Д00-8	Д00-8
9	Sealing ring	Д00-9	Д00-9	Д00-9
10	Sealing washer	Д00-10	Д00-10	Д00-10
11	Plug	Д00-11	Д00-11	Д00-11
12	Fork	Г00-12	-	-
13	Piston	Д02-15	П02-15	К02-15
14	Distributor	Д02-16	П02-16	-
15	Sealing ring	Д02-17	П02-17	Д02-17
16	Spring	-	П02-18	П02-18
17	Plug		П02-19	П02-19
18	Shackle	Д03-20	Д03-20	Д03-20
19	Sealing ring	Д03-21	Д03-21	Д03-21
20	Nut	Д03-22	Д03-22	Д03-22
21	Washer	Д03-23	Д03-23	Д03-23
22	Bolt	Д03-24	Д03-24	Д03-24
23	Castle nut	Д03-25	Д03-25	Д03-25
24	Washer	Д03-26	Д03-26	Д03-26
25	Washer	Д03-27	Д03-27	Д03-27
26	Bolt	Д03-28	Д03-28	Д03-28
27	Bushing	Д03-29	Д03-29	Д03-29
28	Bolt	Д03-30	Д03-30	Д03-30

Declassified in Part - Sanitized Copy Approved for Release 2012/01/04 : CIA-RDP80T00246A062100120001-8

Declassified in Part - Sanitized Copy Approved for Release 2012/01/04 : CIA-RDP80T00246A062100120001-8

1	2	3	4	5
29	Bushing	Д03-31	Д03-31	Д03-31
30	Bolt	Д03-32	Д03-32	Д03-32
31	Nut	Д03-33	Д03-33	Д03-33
32	Bolt	Д03-34	Д03-34	Д03-34
33	Metering valve plunger	Д03-35	Д03-35	Д03-35
34	Plunger	Д03-36	Д03-36	Д03-36
35	Gasket	Д03-37	Д03-37	Д03-37
36	Metering valve spring	Д03-38	Д03-38	Д03-38
37	Plug	Д03-39	Д03-39	Д03-39
38	Stop	Д03-40	Д03-40	Д03-40
39	Pipe connection	Д03-41	-	-
40	Gasket	Д03-42	Д03-42	Д03-42
41	Plunger	Д03-43	Д03-43	Д03-43
42	Spring	Д03-44	Д03-44	Д03-44
43	Felt ring	Д03-45	Д03-45	Д03-45
44	Sealing ring	Д03-46	Д03-46	Д03-46
45	Pipe connection	Д03-47	Д03-47	Д03-47
46	Spring	Д03-48	Д03-48	Д03-48
47	Swivel nipple	Г03-50	Г03-50	Г03-50
48	Swivel nipple	Г03-51	Г03-51	Г03-51
49	Pipe for hydraulic booster БУ-10Б	Д04-55	-	-
50	Pipe for hydraulic booster БУ-10М	Д04-56	-	-

1	2	3	4	5
51	Ear	-	П04-57	-
52	Fork	-	-	К04-58
53	Bushing	-	-	К04-59
54	Head	Д06-60	П06-60	Д06-60
55	Sleeve	Д06-61	Д06-61	Д06-61
56	Sleeve	Д06-62	Д06-62	Д06-62
57	Technological plug	Д06-63	Д06-63	Д03-63
58	Sealing ring	Д06-64	Д06-64	Д06-64
59	Sleeve	Д06-65	Д06-65	Д06-65
60	Technological plug	Д06-66	Д06-66	Д06-66
61	Sealing ring	Д06-67	Д06-67	Д06-67
62	Delivery slide valve	Д07-70	-	-
63	Pipe connection	Д07-71	-	-
64	Swivel nipple	Д07-72	-	-
65	Pipe connection	Д07-73	-	-
66	Screw	Д07-74	-	-
67	Gasket	Д07-75	-	-
68	Plug	Д07-76	-	-
69	Sleeve	Д07-77	-	-
70	Delivery valve body	Д07-78	-	-
71	Plunger	-	П07-79	-
72	Technological plug	-	П07-80	-
73	Sealing ring	-	П07-81	-

Declassified in Part - Sanitized Copy Approved for Release 2012/01/04 : CIA-RDP80T00246A062100120001-8

Declassified in Part - Sanitized Copy Approved for Release 2012/01/04 : CIA-RDP80T00246A062100120001-8

1	2	3	4	5
74	Drain valve body	Д08-82	-	-
75	Plug	Д08-83	-	-
76	Spring	Д08-84	-	-
77	Drain slide valve	Д08-85	-	-
78	Pipe connection	-	П08-87	П08-87
79	Plug	-	П08-88	П08-88
80	Bell crank	Д09-90	П09-90	Д09-90
81	Bushing	Д09-91	Д09-91	Д09-91
82	Plug	Д10-94	Д10-94	Д10-94
83	Nut	Д11-97	Д11-97	Д11-97
84	Coupling	Д11-98	Д11-98	Д11-98
85	Nut	Д11-99	Д11-99	Д11-99
86	Fork	Д11-100	Д11-100	Д11-100
87	Filter frame	Д12-104	Д12-104	Д12-104
88	Slide valve body	Д13-107	Д13-107	Д13-107
89	Sleeve	Д13-108	Д13-108	Д13-108
90	Damper body	Д13-109	Д13-109	Д13-109
91	Pin	Д13-110	Д13-110	Д13-110
92	Screw	Д13-111	Д13-111	Д13-111
93	Slide valve	Д14-115	П14-115	П14-115
94	Sealing ring	Д14-116	Д14-116	Д14-116
95	End-piece	Д15-120	Д15-120	Д15-120
96	Needle	Д16-123	Д16-123	Д16-123

1	2	3	4	5
97	Sealing ring	Д16-124	Д16-124	Д16-124
98	Plug	Д16-125	Д16-125	Д16-125
	Erecting tools			
99	Wrench body	Д20-130	П20-130	Д20-130
100	Pin	Д20-131	П20-131	Д20-131
101	Assembly cone	Д21-133	Д21-133	Д21-133
102	Cap for adjusting slide valve	Д00-135	Д20-135	Д20-135
	Parts used for other assemblies			
103	Ring	БУ-1047А	БУ-1047А	БУ-1047А
104	Locknut	БУ-1057А	БУ-1057А	БУ-1057
105	Sealing ring	БУ-1059Б	БУ-1059Б	БУ-1059Б
106	Gland	БУ-1061У	БУ-1061У	БУ-1061У
107	Sealing ring	БУ-1062	БУ-1062Б	БУ-1062Б
108	Screen	БУ-1072	БУ-1072	БУ-1072
109	Locking	БУ-1092	-	-
110	Locking	-	БУ-193	БУ-193
111	Rod assembly cone	БУ-1098	БУ-1098	БУ-1098
112	Bolt	БУ-1099	БУ-1099	БУ-1099
113	Pin	БУ-1524А	БУ-1524А	БУ-1524А
114	Spring ring	-	406-022А	406-022А

Declassified in Part - Sanitized Copy Approved for Release 2012/01/04 : CIA-RDP80T00246A062100120001-8

Declassified in Part - Sanitized Copy Approved for Release 2012/01/04 : CIA-RDP80T00246A062100120001-8

1	2	3	4	5
	Standard parts			
115	Cotter pin	1x15 State Standard ГОСТ 397-54	1x1.5 State Standard ГОСТ 397-54	-
116	Cotter pin	1.5x12 State Standard ГОСТ 397-54	1.5x12 State Standard ГОСТ 397-54	-
117	Cotter pin	1.5x20 State Standard ГОСТ397-54	1.5x20 State Standard ГОСТ 397-54	-
118	Union nut	1045А-5-4	-	-
119	Nipple	1046А-5-4	-	-
120	Ball bearing	98077	98077	98077
121	Hinge bearing	ШМ-5	ШМ-5	ШМ-5
122	Ball	1/8" State Standard ГОСТ 3722-54	1/8" State Standard ГОСТ 3722-54	1/8" State Standard ГОСТ 3722-54
123	Ball	-	3/8" State Standard ГОСТ 3722-54	3/8" State Standard ГОСТ 3722-54
124	Ball bearing	-	ГПЗ No.1202	

1	2	3	4	5
125	Locking wire, dia. 1 mm	-	l = 700 State Standard ГОСТ 792-41	l = 700 State Standard ГОСТ 792-41
126	Cotter pin	-	2x12 State Standard ГОСТ 397-54	2x12 State Standard ГОСТ 397-54

APPENDIX 2

Specification of type БУ-13М hydraulic booster units

No.	Description	БУ-13М booster unit	БУ-14М booster unit	БУ-14МС booster unit
1	2	3	4	5
1	Distributor bushing	БУ-13030М	БУ-13030М	БУ-13030М
2	Distributor unit	БУ-13040М1	БУ-14040М1	БУ-14040М1
3	Piston unit	БУ-13050М1	БУ-14050М1	БУ-14050М1
4	Fork unit	БУ-13070М	-	-
5	Ear unit	-	БУ-5600М	-
6	End-piece unit	-	-	БУ-5600МС
7	Damper unit	БУ-13080М	БУ-13080М	БУ-13080М
8	Plunger unit	БУ-14090М1	БУ-14090М1	БУ-14090М1
9	Plug unit	БУ-13230М	БУ-13230М	БУ-13230М

Declassified in Part - Sanitized Copy Approved for Release 2012/01/04 : CIA-RDP80T00246A062100120001-8

Declassified in Part - Sanitized Copy Approved for Release 2012/01/04 : CIA-RDP80T00246A062100120001-8

1	2	3	4	5
10	Head unit	БУ-36200	БУ-36200	БУ-36200
11	Duplicate slide valve unit	БУ-36010	БУ-36010	БУ-36010
12	Slide valve unit	БУ-38020	БУ-36020	БУ-36020
13	Sleeve unit	БУ-36030	БУ-36030	БУ-36030
14	Head sub-unit	БУ-36070	БУ-36070	БУ-36070
15	Plug unit	БУ-36080	БУ-36080	БУ-36080
16	Pipe connection unit	БУ-8700Б	БУ-8700Б	БУ-3700Б
17	Shackle unit	БУ-5360D	БУ-5360D	БУ-5360D
18	Filter unit	Д12-0	Д12-0	Д12-0
19	Assembly cones	Д21-0	Д21-0	Д21-0
20	Seal unit	БУ-1063Б	БУ-1063Б	БУ-1063Б
21	Hydraulic booster assembly drawing	БУ-13000М2	БУ-14000М1	БУ-14000МС
22	Hydraulic booster overall drawing	БУ-13100М	БУ-14100М	БУ-14100МС

Specification of type БУ-13М hydraulic booster parts

No.	Description	БУ-13М booster part	БУ-14М booster part	БУ-14МС booster part
1	2	3	4	5
1	Distributor	БУ-13017М1	БУ-14017М1	БУ-14017М1
2	Piston	БУ-13018М1	БУ-14018М1	БУ-14018М1

1	2	3	4	5
3	Plug	БУ-13022М	БУ-13022М	БУ-13022М
4	Washer	БУ-13029М	БУ-13029М	БУ-13029М
5	Sealing ring	БУ-13031М	БУ-13031М	БУ-13031М
6	Bushing	БУ-13032М	БУ-13032М	БУ-13032М
7	Washer, adjusting	БУ-13033М	БУ-13033М	БУ-13033М
8	Felt ring	БУ-13034М	БУ-13034М	БУ-13034М
9	Sealing ring	БУ-13035М	БУ-13035М	БУ-13035М
10	Gasket	БУ-13036М	БУ-13036М	БУ-13036М
11	Gasket	БУ-13037М	БУ-13037М	БУ-13037М
12	Locking	БУ-13038М	БУ-13038М	БУ-13038М
13	Gasket	БУ-13043М	БУ-13043М	БУ-13043М
14	Gasket	БУ-13044М	БУ-13044М	БУ-13044М
15	Gasket	БУ-13051М	БУ-14051М	БУ-14051М
16	Fork	БУ-13071М	-	-
17	Castle nut	БУ-13201М	БУ-13201М	БУ-13201М
18	Washer	БУ-13202М	БУ-13202М	БУ-13202М
19	Cover	БУ-13231М	БУ-13231М	БУ-13231М
20	Cylinder bushing	БУ-13250А	БУ-14250	БУ-14250
21	Cylinder nut	БУ-13251А	-	-
22	Cylinder	БУ-13254А	БУ-14254	БУ-14254С
23	Swivel nipple	БУ-13411	БУ-13411	БУ-13411
24	Swivel nipple	БУ-13415	БУ-13415	БУ-13415
25	Key	БУ-14002	БУ-14002	БУ-14002

Declassified in Part - Sanitized Copy Approved for Release 2012/01/04 : CIA-RDP80T00246A062100120001-8

Declassified in Part - Sanitized Copy Approved for Release 2012/01/04 : CIA-RDP80T00246A062100120001-8

1	2	3	4	5
26	Locking	БУ-14008	БУ-14008	БУ-14008
27	Plunger	БУ-14021	БУ-14021	БУ-14021
28	Spring ring	БУ-14023	БУ-14023	БУ-14023
29	Pipe connection	БУ-14025	БУ-14025	БУ-14025
30	Washer, adjusting	БУ-14027	БУ-14027	БУ-14027
31	Sealing ring	БУ-14029	БУ-14029	БУ-14029
32	Distance bushing	-	БУ-14356	-
33	Head body	БУ-36001А	БУ-36001А	БУ-36001А
34	Duplicate slide valve	БУ-36002	БУ-36002	БУ-36002С
35	Slide valve	БУ-36003	БУ-36003	БУ-36003
36	Sleeve	БУ-36004	БУ-36004	БУ-36004
37	Bushing	БУ-36005	БУ-36005	БУ-36005
38	Slide valve spring	БУ-36006	БУ-36006	БУ-36006
39	Plug	БУ-36007	БУ-36007	БУ-36007
40	Nut	БУ-36008	БУ-36008	БУ-36008
41	Washer	БУ-36009	БУ-36009	БУ-36009
42	Bell crank, right	БУ-36012	БУ-36012	БУ-36012
43	Bell crank, left	БУ-36013	БУ-36013	БУ-36013
44	Bushing	БУ-36014	БУ-36014	БУ-36014С
45	Bolt	БУ-36015	БУ-36015	БУ-36015
46	Shackle	БУ-36016	БУ-36016	БУ-36016
47	Plug	БУ-36019	БУ-36019	БУ-36019
48	Eccentric bolt	БУ-36021	БУ-36021	БУ-36021
49	Gasket	БУ-36071	БУ-36071	БУ-36071

1	2	3	4	5
50	Locknut	Д00-2	Д00-2	Д00-2
51	Sealing ring	Д00-4	-	-
52	Sealing ring	Д00-8	Д00-8	Д00-8
53	Sealing ring	Д00-9	Д00-9	Д00-9
54	Nut	Д00-22А	Д00-22А	Д00-22А
55	Washer	Д03-23А	Д03-23А	Д03-23А
56	Washer	Д03-26	Д03-26	Д03-26
57	Bolt	Д03-32	Д03-32	Д03-32
58	Nut	Д03-33	Д03-33	Д03-33
59	Gasket	Д03-42	Д03-42	Д03-42
60	Filter frame	Д12-104	Д12-104	Д12-104
61	Sealing ring	Д14-116	Д14-116	Д14-116
62	Locknut	-	П00-2	П00-2
63	Sealing ring	-	П00-4	П00-4
64	Sealing ring	-	П00-7	П00-7
65	Sealing ring	П07-81	П07-81	П07-81
66	Plug	П08-88	П08-88	П08-88
67	Pipe connection	БУ-8743Б	БУ-8743Б	БУ-8743Б
68	Ear	-	БУ-5645М	-
69	Rod end-piece	-	-	БУ-5645С
70	Bolt	БУ-51020	БУ-51020	БУ-51020
71	Bushing	БУ-51030	БУ-51030	БУ-51030
72	Castle nut	БУ-51060	БУ-51060	БУ-51060

Declassified in Part - Sanitized Copy Approved for Release 2012/01/04 : CIA-RDP80T00246A062100120001-8

Declassified in Part - Sanitized Copy Approved for Release 2012/01/04 : CIA-RDP80T00246A062100120001-8

1	2	3	4	5
73	Damper body	БУ-53220	БУ-53220	БУ-53220
74	Washer	БУ-53230	БУ-53230	БУ-53230
75	Plug	БУ-53380	БУ-53380	БУ-53380
76	Shackle	БУ-53610	БУ-53610	БУ-53610
77	Locknut	БУ-1057	-	-
78	Seal	БУ-1059	БУ-1059	БУ-1059
79	Gland	БУ-1061	БУ-1061	БУ-1061
80	Filter screen	БУ-1072	БУ-1072	БУ-1072
81	Pin	БУ-1490	БУ-1490	БУ-1490
82	Bushing	БУ-1628	-	-
83	Spring	АПР1-941Д	АПР1-941Д	АПР1-941Д
84	Plug	БУ-4055	БУ-4055	БУ-4055
85	Spring ring	406-022	406-022	406-022
86	Sealing ring	РА1-686А	-	-
87	Sealing ring	БУ15-434	БУ15-434	БУ15-434
88	Sealing ring	БУ15-445А	БУ15-445А	БУ15-445А
89	Sealing ring	ПС1-1142	ПС1-1142	ПС1-1142
90	Sealing ring	ПС1-1382	ПС1-1382	ПС1-1382
91	Sealing ring	БУ-21265	БУ-21265	БУ-21265
		Erecting tools		
92	Rod assembly cone	БУ-1098	БУ-1098	БУ-1098
93	Bolt	БУ-1099	БУ-1099	БУ-1099

1	2	3	4	5
94	Assembly cone	Д21-133	Д21-133	Д21-133
95	Cylinder nut wrench	БУ-13045	-	-
96	Insert for wrench	-	БУ-14045	БУ-14045
97	Clamp	БУ13М-001	БУ13М-001	БУ13М-001
98	Screw	БУ13-002	БУ13-002	БУ13-002
99	Limiter	БУ13М-003	БУ13М-003	БУ13М-003
		Standard parts		
100	Ball bearing	980077	980077	980077
101	Hinge bearing ШМ-12	-	State Standard ГОСТ 3635-54	-
102	Hinge bearing ШМ-6	State Standard ГОСТ 3636-54 dia.3/8"	State Standard ГОСТ 3636-54 dia.3/8"	State Standard ГОСТ 3636-54 dia.3/8"
103	Ball	State Standard ГОСТ 3722-54 dia.3.969	State Standard ГОСТ 3722-54 dia.3.969	State Standard ГОСТ 3722-54 dia.3.969
104	Ball	State Standard ГОСТ 3722-54	State Standard ГОСТ 3722-54	State Standard ГОСТ 3722-54
105	Cotter pin	State Standard ГОСТ 397-54 1x12	State Standard ГОСТ 397-54 1x12	State Standard ГОСТ 397-54 1x12

Declassified in Part - Sanitized Copy Approved for Release 2012/01/04 : CIA-RDP80T00246A062100120001-8

Declassified in Part - Sanitized Copy Approved for Release 2012/01/04 : CIA-RDP80T00246A062100120001-8

1	2	3	4	5
106	Cotter pin	State Standard ГОСТ 397-54 1.5x12	State Standard ГОСТ 397-54 1.5x12	State Standard ГОСТ 397-54 1.5x12
107	Cotter pin	State Standard ГОСТ 397-54 1.5x20	State Standard ГОСТ 397-54 1.5x20	State Standard ГОСТ 397-54 1.5x20
108	Cotter pin	-	State Standard ГОСТ 397-54 2x12	State Standard ГОСТ 397-54 2x12
109	Rivet	2008A50-1.6-4	2008A50-1.6-4	2008A50-1.6-4
110	Seal	H9301	H9301	H9301
111	Locking wire, dia.1 mm	l = 700 mm	l = 700 mm	l = 700 mm

APPENDIX 3

Specification of type БУ-1У hydraulic booster units

No.	Description	БУ-1У booster part	БУ-1М booster part	БУ-1М-РВ booster part
1	2	3	4	5
1	Piston sub-unit	БУ-1100Б	БУ-1100Б	БУ-1100Б
2	Piston unit	БУ-1200Б	БУ-1200Б	БУ-1200Б
3	Yoke unit	БУ-1400У	БУ-1400У	БУ-1400У
4	Slide valve unit	БУ-1500В	БУ-1500М	БУ-1500М
5	Slide valve sub-unit	БУ-1566Б	БУ-1566М	БУ-1566М
6	End piece unit	БУ-1510В	БУ-1510В	БУ-1510В
7	End piece unit	БУ-1600У	-	—
8	Fork unit	-	БУ-1600М	БУ-1600М
9	Shackle unit	БУ-1700	БУ-1700	БУ-1700
10	Head unit	БУ-1800	БУ-1800	БУ-1800
11	Link unit	БУ-1900	БУ-1900	БУ-1900
12	Seal unit	БУ-1063Б	БУ-1063Б	БУ-1063Б
13	Filter	БУ-1070	БУ-1070	БУ-1070
14	Cylinder bushing wrench	БУ-1082У	БУ-1082У	БУ-1082У
15	Assembly cones	БУ-1096	БУ-1096	БУ-1096
16	Hydraulic booster assembly drawing	БУ-1001Д	БУ-1001М	БУ-1001М-РВ
17	Hydraulic booster overall drawing	БУ-1002Д	БУ-1002М	БУ-1002М-РВ

Declassified in Part - Sanitized Copy Approved for Release 2012/01/04 : CIA-RDP80T00246A062100120001-8

Declassified in Part - Sanitized Copy Approved for Release 2012/01/04 : CIA-RDP80T00246A062100120001-8

Specification of type БУ-1У hydraulic booster parts

No.	Part	БУ-1У booster part	БУ-1М БУ-1М-РВ boosters part	Note
1	2	3	4	5
1	Piston	БУ-1101Б	БУ-1101Б	
2	Sleeve	БУ-1102Б	БУ-1102Б	
3	Rod	БУ-1205Б	БУ-1205Б	
4	Plunger	БУ-1206Б	БУ-1206Б	
5	Sealing ring	БУ-1286М	БУ-1286М	
6	Cylinder	БУ-1010Б	БУ-1010М	
7	Yoke	БУ-1413У	БУ-1413У	
8	Swivel nipple	БУ-1414А	БУ-1414А	
9	Pipe connection	БУ-1415А	БУ-1415А	
10	Sealing ring	БУ-1416	БУ-1416	
11	Bushing	БУ-1488	БУ-1488	
12	Threaded bushing	БУ-1489	БУ-1489	
13	Pin	БУ-1490	БУ-1490	
14	Bushing	БУ-1511В	БУ-1511В	
15	Slide valve	БУ-1518В	БУ-1518М	
16	Nut	БУ-1519	БУ-1519	
17	Nut	БУ-1520	БУ-1520	
18	Shank	БУ-1521А	БУ-1521А	
19	Sleeve	БУ-1523А	БУ-1523А	
20	Pin	БУ-1524А	БУ-1524А	

1	2	3	4	5
21	End-piece	БУ-1525А	БУ-1525А	
22	Damper body	БУ-1567В	БУ-1567В	
23	Washer	БУ-1568Б	БУ-1568Б	
24	Plug	БУ-1569В	БУ-1569В	
25	Ball seat	БУ-1578	БУ-1578	
26	Looking nut	БУ-1579	БУ-1579	
27	End-piece	БУ-1626У	-	
28	Fork	-	БУ-1627	
29	Bushing	-	БУ-1628	
30	Shackle	БУ-1729	БУ-1729	
31	Head	БУ-1831В	БУ-1831В	
32	Bushing	БУ-1833	БУ-1833	
33	Link	БУ-1936	БУ-1936	
34	Bolt	БУ-1040	БУ-1040	
35	Bolt	БУ-1041	БУ-1041	
36	Castle nut	БУ-1042	БУ-1042	
37	Washer	БУ-1043	БУ-1043	
38	Stop	БУ-1044	БУ-1044	
39	Nut	БУ-1045	БУ-1045	
40	Ring	БУ-1047А	БУ-1047А	
41	Coupling bolt	БУ-1048	БУ-1048	
42	Spherical nut	БУ-1049	БУ-1049	
43	Plug	БУ-1050	БУ-1050	

Declassified in Part - Sanitized Copy Approved for Release 2012/01/04 : CIA-RDP80T00246A062100120001-8

Declassified in Part - Sanitized Copy Approved for Release 2012/01/04 : CIA-RDP80T00246A062100120001-8

1	2	3	4	5
44	Sealing gasket	БУ-1051А	БУ-1051А	
45	Adjusting washer	БУ-1054А	БУ-1054А	
46	Locknut	БУ-1057А	БУ-1057А	
47	Cylinder bushing	БУ-1058Б	БУ-1058Б	
48	Seal	БУ-1059Б	БУ-1059Б	
49	Gland	БУ-1061У	БУ-1061У	
50	Sealing ring	БУ-1062Б	БУ-1062Б	
51	Needle (for БУ-1МВР and БУ-1064Ц-РВ)	БУ-1064	БУ-1064	
52	Filter frame	БУ-1071	БУ-1071	
53	Filter screen	БУ-1072	БУ-1072	
54	Lock	БУ-1076	БУ-1076	
55	Screw	БУ-1077	БУ-1077	
56	Screw	БУ-1079	БУ-1079	
57	Screw	БУ-1080А	БУ-1080А	
58	Sealing ring	БУ-1087	БУ-1087	
59	Bushing	БУ-1091А	БУ-1091А	
60	Screw	БУ-1009	БУ-1009	
61	Lock	БУ-1092	БУ-1093	
		Erecting tools		
62	Wrench body	БУ-1083У	БУ-1083У	
63	Pin	БУ-1084У	БУ-1084У	
64	Sleeve cleaning rod	БУ-1095	БУ-1095	

1	2	3	4	5
65	Piston assembly cone	БУ-1097	БУ-1097	
66	Rod assembly cone	БУ-1098	БУ-1098	
67	Bolt	БУ-1099	БУ-1099	
		Borrowed parts		
68	Sealing ring	Д00-6	Д00-6	From БУ-10
69	Sealing ring	Д00-7	Д00-7	The same
70	Sealing ring	Д02-17	Д02-17	From БУ-10
71	Sealing ring	Д00-8	Д00-8	From БУ-10
72	Sealing ring	Д16-124	Д16-124	From БУ-10
		Standard parts and parts used for other assemblies		
73	Ball bearing No.1006	State Standard ГОСТ 5720-51	State Standard ГОСТ 5720-51	
74	Ball bearing No.6	State Standard ГОСТ 6121-39	State Standard ГОСТ 6121-39	
75	Ball	3/16"	3/16"	
76	Cotter pin	State Standard ГОСТ 397-54 / 1.5x15	State Standard ГОСТ 397-54 / 1.5x15	
77	Cotter pin	State Standard ГОСТ 397-54 / 1.5x20	State Standard ГОСТ 397-54 / 1.5x20	
78	Locking wire, dia.1 mm	l = 400 mm	l = 400 mm	

Declassified in Part - Sanitized Copy Approved for Release 2012/01/04 : CIA-RDP80T00246A062100120001-8

Declassified in Part - Sanitized Copy Approved for Release 2012/01/04 : CIA-RDP80T00246A062100120001-8

APPENDIX 4

Individual set of spare parts for type БУ-10 hydraulic boosters

No.	Part	Description	Quantity per one booster			
			БУ-5А	БУ-8А	БУ-10А	БУ-10Б and БУ-10М
1	2	3	4	5	6	7
1	Д12-0	Filter (unit)	1	1	1	1
2	П20-0	Wrench for cylinder nut	1	-	-	-
3	Д20-0	Wrench for cylinder	-	-	1 for 10 units	1 for 10 units
4	Д21-0	Assembly cone	1 for 2 units	1 for 2 units	1 for 10 units	1 for 10 units
5	Д00-1	Looking device	2	2	2	2
6	П00-4	Sealing ring	3	-	-	-
7	Д00-4	Sealing ring	-	2	2	2
8	Д00-6	Sealing ring	-	-	2	2
9	П00-6	Sealing ring	4	4	-	-
10	П00-7	Sealing ring	3	-	-	-
11	Д00-7	Sealing ring	-	-	4	4
12	Д00-8	Sealing ring	1	1	3	3
13	Д00-9	Sealing ring	6	6	6	9
14	Д00-10	Sealing washer	2	2	2	2

1	2	3	4	5	6	7
15	Д00-17	Sealing ring	-	2	2	2
16	П00-17	Sealing ring	2	-	-	-
17	Д03-21	Sealing ring	3	3	3	3
18	Д03-37	Gasket	4	4	4	4
19	Д03-42	Gasket	9	9	9	9
20	Д03-45	Felt ring	8	8	8	8
21	Д03-46	Sealing ring	4	4	2	2
22	Д07-45	Gasket	-	-	-	8
23	Д14-116	Sealing ring	6 (2 pcs of each diameter)	6 (2 pcs of each diameter)	6 (2 pcs of each diameter)	6 (2 pieces of each diameter)
24	Д16-24	Sealing ring	2	2	2	2
25	Д00-135	Cap for adjusting slide valve	1 for 2 units	1 for 2 units	1 for 2 units	1 for 2 units
26	БУ-1047А	Ring	2	2	4	4
27	БУ-1062Б	Sealing ring	-	3	3	3
28	БУ-1063Б	Sealing ring	4	4	4	4
29	БУ-1092	Lock	-	-	3	3
30	БУ-1093	Lock	3	3	-	-
31	406-022	Spring ring	1	1	-	-
32		Cotter pin	3	3	3	3

State Standard
ГОСТ 397-54

Declassified in Part - Sanitized Copy Approved for Release 2012/01/04 : CIA-RDP80T00246A062100120001-8

Declassified in Part - Sanitized Copy Approved for Release 2012/01/04 : CIA-RDP80T00246A062100120001-8

1	2	3	4	5	6	7
33	1.5x12 State Standard ГОСТ 397-54	Cotter pin	4	4	4	4
34	1.5x20 State Standard ГОСТ 397-54	Cotter pin	6	6	6	6
35	2x12 State Standard ГОСТ 397-54	Cotter pin	2	2	2	2
36	-	Wire dia.1 mm	l=700 mm	l=700 mm	l = 700mm	l = 700 mm

APPENDIX 5

Individual set of spare parts for type БУ-13М hydraulic boosters

No.	Designation		Description	Quantity	Note
1	2		3	4	5
1	БУ-13034М	Felt ring		8	
2	БУ-13036М	Gasket		8	
3	БУ-13037М	Gasket		2	
4	БУ-13038М	Lock		2	
5	БУ-13043М	Gasket		2	
6	БУ-13044М	Gasket		4	
7	БУ-13045М	Wrench for cylinder nut		1	For БУ-13М
8	БУ-13051М	Gasket		2	Ditto
9	БУ-14002	Key		3	
10	БУ-14003	Lock		2	
11	БУ-14029М	Sealing ring		2	
12	БУ-14045	Insert for wrench		1	For БУ-14М and БУ-14МС
13	БУ-14051М	Gasket		2	Ditto
14	БУ-36071М	Gasket		1	
15	БУ15-434	Sealing ring		5	
16	БУ15-445	Sealing ring		2	
17	Д12-0	Filter (unit)		1	
18	Д21-0	Assembly cones		1	For 2 units
19	Д00-4	Sealing ring		1	For БУ-13М
20	Д00-8	Sealing ring		2	
21	Д00-9	Sealing ring		5	
22	Д03-42	Gasket		9	
23	Д14-116	Sealing ring		3	
24	Д16-124	Sealing ring		2	
25	ПО-4	Sealing ring		1	For БУ-14 and БУ-14МС

Declassified in Part - Sanitized Copy Approved for Release 2012/01/04 : CIA-RDP80T00246A062100120001-8

Declassified in Part - Sanitized Copy Approved for Release 2012/01/04 : CIA-RDP80T00246A062100120001-8

1	2		3	4	5
26	ПОО-7	Sealing ring		3	For БУ-14 and БУ-14МС
27	ПО7-81	Sealing ring		2	
28	БУ-1063Б	Sealing unit		2	
29	БУ-5173Б	Sealing ring		2	
30	РА1-686А	Sealing ring		3	
31	БУ-21265	Sealing ring		2	
32	ПС1-1142	Sealing ring		2	
33	1.5x12	Cotter pin		4	-
34	1.5x20	Cotter pin		6	
35	2x12	Cotter pin		2	For БУ-14М and БУ-14МС
36	БУ-13М-001	Clamp		1	
37	БУ-13-002	Screw		1	
38	БУ-23М-003	Limiter		1	

APPENDIX 6

Individual set of spare parts for type БУ-1У hydraulic boosters

No.	Designation		Description	Quantity	Note
1	2		3	4	5
1	БУ-1009	Screw		1	
2	БУ-1045	Nut		2	

1	2	3	4	5
3	БУ-1044	Stop	2	
4	БУ-1047А	Ring	1	
5	БУ-1062Б	Sealing ring	2	
6	БУ-1063Б	Sealing unit	2	
7	БУ-1070	Filter	1	
8	БУ-1082У	Wrench for cylinder bushing	1	
9	БУ-1087	Sealing ring	5	
10	БУ-1092	Lock	2	For БУ-1У
11	БУ-1093	Lock	-	For БУ-1М and БУ-1М-РВ
12	БУ-1095	Sleeve cleaning rod with spare strip	1	
13	БУ-1096	Assembly cones for seals	1 for 4 boosters	
14	БУ-1416	Sealing ring	5	
15	ДОО-6	Sealing ring	1	
16	ДОО-7	Sealing ring	2	
17	ДОО-8	Sealing ring	2	
18	Д02-17	Sealing ring	1	
19	State Standard ГОСТ 397-54 1.5x20	Cotter pin	1	

Declassified in Part - Sanitized Copy Approved for Release 2012/01/04 : CIA-RDP80T00246A062100120001-8

Declassified in Part - Sanitized Copy Approved for Release 2012/01/04 : CIA-RDP80T00246A062100120001-8

1	2	3	4	5
20	State Standard ГОСТ 397-54 1.5x15	Cotter pin	1	
21	dia. 1 mm	Locking wire	l = 400 mm	

APPENDIX 7

List of erecting tools

No.	Description	БУ-1У БУ-1М БМ-1М-РВ	БУ-5А	БУ-8А	БУ-10 БУ-10Б БУ-10М	БУ-13М	БУ-14М БУ-14МС
1	2	3	4	5	6	7	8
1	Wrench for cylinder nut	БУ-1082У	П20-0	Д20-0	Д20-0	БУ-13045	-
2	Insert for wrench	-	-	-	-	-	БУ-14045
3	Assembly cone	БУ-1096	Д21-0	Д21-0	Д21-0	Д21-0	Д21-0
4	Cap for adjusting slide valve	-	Д00-135	Д00-135	Д00-135	-	-
5	Rod for sleeve cleaning	БУ-1095	-	-	-	-	-

1	2	3	4	5	6	7	8
6	Clamp	-	-	-	-	БУ13М-001	БУ13М-001
7	Screw	-	-	-	-	БУ13-002	БУ13-002
8	Limiter	-	-	-	-	БУ13М-003	БУ13М-003

APPENDIX 8

Table of clearances and fits.

Boosters БУ-10, БУ-10Б and БУ-10М

Designation	Description	Size and fit	Maximum deviation, mm		Clearance(+) and interference(-) without coating, mm	Clearance(+) and interference(-) with coating, mm
			upper	lower		
1	2	3	4	5	6	7
Д00-3	Cylinder	56А	+0.03	0	+0.175 +0.095	
Д02-15	Piston	56Д	-0.095	-0.145		
Д00-8	Cylinder	32А	+0.027	0		+0.077 +0.025
Д00-15	Piston	32Х	-0.025	-0.05		
Д00-3	Cylinder	56А	+0.03	0	+0.062 +0.012	
Д00-5	Cylinder nut	56Д	-0.012	-0.032		
Д00-5	Cylinder nut	32А	+0.027	0		+0.077 +0.025

Declassified in Part - Sanitized Copy Approved for Release 2012/01/04 : CIA-RDP80T00246A062100120001-8

Declassified in Part - Sanitized Copy Approved for Release 2012/01/04 : CIA-RDP80T00246A062100120001-8

1	2	3	4	5	6	7
Д02-15	Piston	32X	-0.025	-0.05		+0.077 +0.025
Д02-15	Piston	22А3	+0.045	0	+0.175 +0.06	
Д02-16	Distributor	22Ш3	-0.06	-0.13		
Д03-20	Shackle	8А	+0.016	0	+0.031 +0.005	
Д03-24	Bolt	8Д	-0.005	-0.015		
Д03-20	Shackle	7А	+0.016	0	+0.031 +0.005	
Д03-32	Bolt	7Д	-0.005	-0.015		
ШМ-5	Hinge bearing	5	0	-0.01	+0.008 -0.01	
Д03-28	Bolt	5С	0	-0.008		
Д03-31	Bushing	8А	+0.016	0	+0.031 +0.005	
Д03-24	Bolt	8Д	-0.005	-0.015		
980077	Ball bearing	7	0	-0.01	+0.015 -0.005	
Д03-32	Bolt	7Д	-0.005	-0.015		
Д06-60	Head	28А	+0.023	0	+0.063 +0.02	+0.053 -0.004
Д02-15	Piston	28X	-0.02	-0.04	+0.063 +0.02	+0.053 -0.004
Д06-60	Head	28А	+0.023	0	+0.153 +0.06	
Д02-16	Distributor	28Ш3	-0.06	-0.13		
Д06-60	Head	11.7А3	+0.035	0	+0.847 +0.8	+0.841 +0.786
Д03-31	Bushing	10.9С	0	-0.012		

1	2	3	4	5	6	7
Д06-60	Head	23А	+0.023	0	-0.015 -0.03 (to be adjusted by selection)	
Д06-61	Sleeve	23ПД	+0.039	+0.035		
Д06-60	Head	18А	+0.019	0	-0.015 -0.025 (to be adjusted by selection)	
Д06-62	Sleeve	18ПД	+0.032	+0.02		
Д06-60	Head	23А	+0.023	0	-0.015 -0.03 (to be adjusted by selection)	
Д06-65	Sleeve	23ПД	+0.039	+0.025		
Д06-60	Head	19Т	0	-0.023	+0.009 -0.023	
980077	Ball bearing	19	0	-0.009		
Д06-60	Head	5А3	+0.025	0	+0.047 +0.01	
Д13-110	Pin	5X	-0.01	-0.022		
Д06-61	Sleeve	19А	+0.023	0	+0.010 +0.015 (to be adjusted by selection)	
Д03-43	Plunger	19Д	-0.008	-0.022		
Д06-61	Sleeve	8А	+0.016	0	+0.076 +0.035	+0.07 +0.021
Д03-40	Stop	8Ш	-0.035	-0.06		

Declassified in Part - Sanitized Copy Approved for Release 2012/01/04 : CIA-RDP80T00246A062100120001-8

Declassified in Part - Sanitized Copy Approved for Release 2012/01/04 : CIA-RDP80T00246A062100120001-8

1	2	3	4	5	6	7
Д06-65	Sleeve	18А	+0.019	0	+0.074	+0.068
Д03-40	Stop	18Д	-0.03	-0.055	+0.03	+0.016
Д06-62	Sleeve	14А	+0.019	0	+0.089	
Д03-36	Plunger	14Х3	-0.02	-0.07	+0.02	
Д06-62	Sleeve	7.5А	+0.016	0	+0.012	
Д03-35	Valve metering plunger	7.5Д	-0.005	-0.015	+0.007 (to be adjusted by selection)	
Д09-90	Bell crank	8А	+0.016	0	+0.031	
Д03-24	Bolt	8Д	-0.005	-0.015	+0.005	
Д09-90	Bell crank	5Н	+0.004	-0.009	+0.012	
Д03-28	Bolt	5С	0	-0.008	-0.009	
Д09-90	Bell crank	7А	+0.016	0	+0.031	
Д03-32	Bolt	7Д	-0.005	-0.015	+0.005	
Д09-90	Bell crank	15А	+0.019	0	-0.034	
Д09-91	Bushing	15Пр	+0.034	+0.022	-0.003	
Д13-107	Slide valve body	18А	+0.019	0	-0.015	
Д13-108	Sleeve	18Пд	+0.032	+0.02	-0.025 (to be adjusted by selection)	
Д11-100	Fork	5Н	+0.004	-0.009	+0.007	
Д03-34	Bolt	5П2а	+0.009	-0.003	-0.018	

1	2	3	4	5	6	7
Д13-107	Slide valve body	26А	+0.023	0	+0.005	
Д13-109	Damper body	26Н	+0.017	+0.002	-0.003 (to be adjusted by selection)	
Д13-107	Slide valve body	5СПр	-0.03	-0.045	-0.008	
Д13-110	Pin	5Х	-0.01	-0.022	-0.035	
Д13-108	Sleeve	11А	+0.019	0	+0.010	
Д14-115	Slide valve	11С	0	-0.012	+0.007 (to be adjusted by selection)	
Д13-109	Damper body	20А	+0.023	0	+0.027	
Д14-115	Slide valve	20Д	-0.008	-0.022	+0.020 (to be adjusted by selection)	
Д13-109	Damper body	11А	+0.019	0	+0.049	
Д14-115	Slide valve	11	-0.02	-0.03	+0.02	
Д14-115	Slide valve	5А	+0.013	0	+0.006	
Д03-34	Bolt	5П2а	+0.009	-0.003	+0.003 (to be adjusted by selection)	
Д14-115	Slide valve	6А	+0.013	0	+0.025	
Д10-143	Needle	6Д	-0.004	-0.012	+0.004	
Д10-140	End-piece	14Г	0	-0.019	+0.008	
ШП-5	Hinge bearing	14	0	-0.008	-0.019	

Declassified in Part - Sanitized Copy Approved for Release 2012/01/04 : CIA-RDP80T00246A062100120001-8

Declassified in Part - Sanitized Copy Approved for Release 2012/01/04 : CIA-RDP80T00246A062100120001-8

1	2	3	4	5	6	7
ГОЗ-51	Swivel nipple (for booster БУ-10)	$11A_3$	+0.035	0	+0.105 +0.02	
Д12-104	Filter frame (for booster БУ-10)	$11X_3$	-0.02	-0.07		
Д07-73	Pipe connection (for boosters БУ-10Б, БУ-10М)	$11A_3$	+0.035	0	+0.105 +0.02	
Д12-104	Filter frame (for boosters БУ-10Б, БУ-10М)	$11X_3$	-0.02	-0.07		
Д07-77	Sleeve (for boosters БУ-10Б, БУ-10М)	13A	+0.019	0	+0.012 +0.008 (to be adjusted by selection)	
Д07-70	Delivery slide valve (for boosters БУ-10Б, БУ-10М)	13П	+0.006	-0.006		

1	2	3	4	5	6	7
Д07-77	Sleeve (for boosters БУ-10Б, БУ-10М)	13A	+0.019	0	+0.012 +0.008 (to be adjusted by selection)	
Д08-85	Drain slide valve (for boosters БУ-10Б, БУ-10М)	13П	+0.006	-0.006		
Д07-78	Delivery valve body (for boosters БУ-10Б, БУ-10М)	$20.5A_3$	+0.045	0	+0.130 +0.025	
Д07-71	Pipe connection	$20.5X_3$	-0.025	-0.085		
Д07-78	Delivery valve body (for boosters БУ-10Б, БУ-10М)	$16A_3$	+0.035	0	+0.105 +0.02	
Д07-73	Pipe connection (for boosters БУ-10Б, БУ-10М)	$16X_3$	+0.02	+0.07		
Д07-78	Delivery valve body (for boosters БУ-10Б, БУ-10М)	$16A_3$	+0.035	0	+0.105 +0.02	

Declassified in Part - Sanitized Copy Approved for Release 2012/01/04 : CIA-RDP80T00246A062100120001-8

Declassified in Part - Sanitized Copy Approved for Release 2012/01/04 : CIA-RDP80T00246A062100120001-8

1	2	3	4	5	6	7
Д07-76	Plug (for boosters БУ-10Б, БУ-10М)	$16X_3$	-0.02	+0.07	+0.105 +0.02	
Д07-78	Delivery valve body (for boosters БУ-10М)	$20.5A_3$	+0.045	0		
Д07-77	Sleeve (for boosters БУ-10Б, БУ-10М)	20.5X	-0.02	-0.04	+0.085 +0.02	
Д08-82	Drain valve body (for boosters БУ-10Б, БУ-10М)	$20.5A_3$	+0.045	0		
Д07-71	Pipe connection (for boosters БУ-10Б, БУ-10М)	$20.5X_3$	-0.025	-0.085	+0.130 +0.025	
Д08-82	Drain valve body (for boosters БУ-10Б, БУ-10М)	$16A_3$	+0.035	0	+0.105 +0.02	

1	2	3	4	5	6	7
Д07-73	Pipe connection (for boosters БУ-10Б, БУ-10М)	$19X_3$	-0.02	-0.07	+0.105 +0.02	
Д08-82	Drain valve body (for boosters БУ-10Б, БУ-10М)	$20.5A_3$	+0.045	0		
Д07-77	Sleeve (for boosters БУ-10Б, БУ-10М)	20.5X	-0.02	-0.04	+0.085 +0.02	
Д08-82	Drain valve body (for boosters БУ-10Б, БУ-10М)	$16A_3$	+0.035	0		
Д08-83	Plug (for boosters БУ-10Б, БУ-10М)	$16X_3$	-0.02	-0.07	+0.105 +0.02	

Declassified in Part - Sanitized Copy Approved for Release 2012/01/04 : CIA-RDP80T00246A062100120001-8

Declassified in Part - Sanitized Copy Approved for Release 2012/01/04 : CIA-RDP80T00246A062100120001-8

APPENDIX 9

Table of clearances and fits. Boosters БУ-5А and БУ-8А

Designation	Description	Size and fit	Maximum deviation, mm		Clearance (+) and interference (-) without coating, mm	Clearance (+) and interference (-) with coating, mm
			upper	lower		
1	2	3	4	5	6	7
П00-8	Cylinder	75А	+0.03	0		+0.175
П02-15	Piston	75Ш	-0.095	-0.145		+0.095
К00-8	Cylinder	56А	+0.03	0		+0.175
К02-15	Piston	56Ш	-0.095	-0.145		+0.095
П00-8	Cylinder	32А	+0.027	0		+0.077
П02-15	Piston	32Х	-0.025	-0.050		+0.025
К00-8	Cylinder	32А	+0.027	0		+0.077
К02-15	Piston	32Х	-0.025	-0.050		+0.025
П00-8	Cylinder	75А	+0.03	0		+0.05
П00-5	Cylinder nut	75С	0	-0.02		0
К00-8	Cylinder	56А	+0.03	0		+0.062
К00-5	Cylinder nut	56Д	+0.012	-0.032		+0.012
П00-5	Cylinder nut	32А	+0.027	0		+0.077
П02-15	Piston	32Х	-0.025	-0.050		+0.025
К00-5	Cylinder nut	32А	+0.027	0		+0.077
К02-15	Piston	32Х	-0.025	-0.050		+0.025

1	2	3	4	5	6	7
П02-15	Piston	23А3	+0.045	0	+0.175	
П02-16	Distributor	23Ш3	-0.06	-0.13	+0.06	
К02-15	Piston	23А3	+0.045	0	+0.175	
П02-16	Distributor	23Ш3	-0.06	-0.13	+0.06	
К02-15	Piston	23А3	+0.045	0	+0.175	
П02-16	Distributor	23Ш3	-0.06	-0.13	+0.06	
Д03-20	Shackle	8А	+0.016	0	+0.031	
Д03-24	Bolt	8Д	-0.005	-0.015	+0.005	
Д03-20	Shackle	7А	+0.016	0	+0.031	
Д03-32	Bolt	7Д	-0.005	-0.015	+0.005	
ШМ-5	Hinge bearing	5	0	-0.01	+0.008	
Д03-28	Bolt	5с	0	-0.008	-0.01	
П03-31	Bushing	8А	+0.016	0	+0.031	
Д03-24	Bolt	8Д	-0.005	-0.015	+0.005	
Д03-31	Bushing	8А	+0.016	0	+0.031	
Д03-24	Bolt	8Д	-0.005	-0.015	+0.005	
980077	Ball bearing	7	0	-0.01	+0.015	
Д03-32	Bolt	7Д	-0.005	-0.015	-0.005	
П06-60	Head	28А	+0.023	0	+0.063	+0.053
П02-15	Piston	28Х	-0.02	-0.04	+0.02	-0.004
Д06-60	Head	28А	+0.023	0	+0.063	+0.053
К02-15	Piston	28Х	-0.02	-0.04	+0.02	-0.004

Declassified in Part - Sanitized Copy Approved for Release 2012/01/04 : CIA-RDP80T00246A062100120001-8

Declassified in Part - Sanitized Copy Approved for Release 2012/01/04 : CIA-RDP80T00246A062100120001-8

1	2	3	4	5	6	7
ПОБ-60	Head	28A	+0.023	0	+0.153	
ПОЗ-16	Distributor	28Ш$_3$	-0.06	-0.13	+0.006	
ДОБ-60	Head	28A	+0.023	0	+0.153	
ПОЗ-16	Distributor	28Ш$_3$	-0.06	-0.13	+0.016	
ПОБ-60	Head	11.7A$_3$	+0.035	0	+0.947	+0.941
ПОЗ-31	Bushing	10.8c	0	-0.012	+0.9	+0.886
ДОБ-60	Head	11.7A$_3$	+0.035	0	+0.847	+0.841
ДОЗ-31	Bushing	10.9C	0	-0.012	+0.8	+0.786
ПОБ-60	Head[1/]	23A	+0.023	0	-0.015	
ДОБ-61	Sleeve[1/]	23ПЛ	+0.039	+0.025	-0.03 (to be adjusted by selection)	
ДОБ-60	Head	23A	+0.023	0	-0.015	
ДОБ-61	Sleeve	23ПЛ	+0.039	+0.025	-0.03 (to be adjusted by selection)	
ПОБ-60	Head	18A	+0.019	0	-0.015	
ДОБ-62	Sleeve	18ПЛ	+0.032	+0.02	-0.025 (to be adjusted by selection)	

1/ Permissible deviation in individual part +0.2 mm.

1	2	3	4	5	6	7
ДОБ-60	Head	18A	+0.019	0	-0.015	
ДОБ-62	Sleeve	18П$_Д$	+0.032	+0.02	-0.025 (to be adjusted by selection)	
ПОБ-60	Head	23A	+0.023	0	-0.015	
ДОБ-65	Sleeve	23ПЛ	+0.039	+0.025	-0.03 (to be adjusted by selection)	
ДОБ-60	Head[1/]	23A	+0.023	0	-0.015	
ДОБ-65	Sleeve[1/]	23ПЛ	+0.039	+0.025	-0.03 (to be adjusted by selection)	
ПОБ-60	Head	19T	0	-0.023	+0.009	
980077	Ball bearing	19	0	-0.009	-0.023	
ДОБ-60	Head	19T	0	-0.023	+0.009	
980077	Ball bearing	19	0	-0.009	-0.023	
ПОБ-60	Head	5A$_3$	+0.025	0	+0.047	
Д13-110	Pin	5X	-0.01	-0.022	+0.01	
ДОБ-60	Head	5A$_3$	+0.025	0	+0.047	
Д13-110	Pin	5X	-0.01	-0.022	+0.01	
ДОБ-61	Sleeve[2/]	19A	+0.023	0		+0.015
ДОБ-45	Plunger[2/]	19Д	-0.008	-0.022		+0.010 (to be adjusted by selection)

1/ Permissible deviation in individual part +0.2 mm.
2/ Permissible deviation in individual part +0.1 mm.

Declassified in Part - Sanitized Copy Approved for Release 2012/01/04 : CIA-RDP80T00246A062100120001-8

Declassified in Part - Sanitized Copy Approved for Release 2012/01/04 : CIA-RDP80T00246A062100120001-8

1	2	3	4	5	6	7
Д06-61	Sleeve	8А	+0.016	0	+0.076	+0.07
Д03-40	Stop	8Ш	-0.035	-0.06	+0.035	+0.021
Д06-65	Sleeve	18А	+0.019	0	+0.074	+0.068
Д03-40	Stop	18Л	-0.03	-0.055	+0.03	+0.016
Д06-62	Sleeve	14А	+0.019	0		+0.089
Д03-36	Plunger	$14X_3$	-0.02	-0.07		+0.02
Д06-62	Sleeve 1/	7.5А	+0.016	0		+0.012
Д03-35	Metering valve plunger 1/	7.5Д	-0.005	-0.005		+0.007 (to be adjusted by selection)
П09-90	Bell crank	8А	+0.016	0	+0.031	
Д03-24	Bolt	8Д	-0.005	-0.015	+0.005	
Д09-90	Bell crank	8А	+0.016	0	+0.031	
Д03-24	Bolt	8Д	-0.005	-0.015	+0.005	
П09-90	Bell crank	5Н	+0.004	-0.009	+0.012	
Д03-28	Bolt	5С	0	-0.008	-0.009	
Д09-90	Bell crank	5Н	+0.004	-0.009	+0.012	
Д03-28	Bolt	5С	0	-0.008	-0.009	
П09-90	Bell crank	7А	-0.016	0	+0.031	
Д03-32	Bolt	7Д	-0.005	-0.015	+0.005	

1/ Permissible deviation in individual part +0.1 mm.

1	2	3	4	5	6	7
Д09-90	Bell crank	7А	+0.016	0	+0.031	
Д03-32	Bolt	7Д	-0.005	-0.015	+0.005	
П09-90	Bell crank	15А-	+0.019	0	-0.034	
Д09-91	Bushing	15Пр	+0.034	+0.022	-0.003	
Д09-9	Bell crank	15А	+0.019	0	-0.034	
Д09-91	Bushing	15Пр	+0.034	+0.022	-0.003	
Д13-107	Slide valve body 1/	18А	+0.019	0	-0.015	
Д13-108	Sleeve 1/	18ПЛ	+0.032	+0.02	-0.025 (to be adjusted by selection)	
Д11-100	Fork	5Н	+0.004	+0.009	+0.007	
Д03-34	Bolt	5П2а	+0.009	-0.003	-0.018	
Д13-107	Slide valve body 2/	26А	+0.023	0	+0.005	
Д13-109	Damper body 2/	26Н	+0.017	+0.002	-0.003 (to be adjusted by selection)	
Д13-107	Slide valve body	5Спр	-0.03	-0.045	-0.008	
Д13-110	Pin	5Х	-0.01	-0.022	-0.035	

1/ Permissible deviation in individual part +0.2 mm.
2/ Permissible deviation in individual part +0.1 mm.

Declassified in Part - Sanitized Copy Approved for Release 2012/01/04 : CIA-RDP80T00246A062100120001-8

Declassified in Part - Sanitized Copy Approved for Release 2012/01/04 : CIA-RDP80T00246A062100120001-8

1	2	3	4	5	6	7
Д19-108	Sleeve 1/	11A	+0.019	0		+0.010
П14-115	Slide valve 1/	11C	0	-0.012		+0.007 (to be adjusted by selection)
Д19-109	Damper body 1/	20A	+0.023	0		+0.040
П14-115	Slide valve 1/	20Д	-0.008	-0.022		+0.020 (To be adjusted by selection)
Д19-109	Damper body 1/	11A	+0.019	0		+0.049
П14-115	Slide valve 1/	11	-0.02	-0.03		+0.020
П14-115	Slide valve	5A	+0.013	0	+0.006	
Д09-34	Bolt	5П2а	+0.009	-0.003	+0.003 (to be adjusted by selection)	
П14-115	Slide valve	6A	+0.013	0	+0.025	
Д16-123	Needle	6Д	-0.004	-0.012	+0.004	
Д15-120	End piece	14T	0	-0.019	+0.008	
ШМ-5	Hinge bearing	14	0	-0.008	-0.019	
Г09-51	Swivel nipple	$11A_3$	+0.035	0	+0.105	
Д12-104	Filter frame	11A	-0.02	-0.07	+0.02	
П02-15	Piston 2/	14A	++0.019	0	+0.012	
П07-79	Plunger 2/	14C	0	-0.012	+0.018 (to be adjusted by selection)	

1/ Permissible deviation in individual part +0.05 mm.

2/ Permissible deviation in individual part +0.1 mm.

1	2	3	4	5	6	7
К02-15	Piston 1/	14A	+0.019	0	+0.012	
П07-79	Plunger 1/	14C	0	-0.012	+0.018 (to be adjusted by selection)	
П02-15	Piston 1/	19A	+0.023	0	+0.063	
П07-79	Plunger 1/	19X	-0.02	-0.04	+0.020	
К02-15	Piston 1/	19A	+0.023	0	+0.063	
П07-79	Plunger	19X	-0.02	-0.04	+0.020	
П02-15	Piston 1/	$21.6A_3$	+0.045	0	+0.13	
П02-19	Plug 1/	$21.6X_3$	-0.025	-0.085	+0.025	
К02-15	Piston 1/	$21.6A_3$	+0.045	0	+0.13	
П02-19	Plug 1/	$21.6X_3$	-0.025	-0.085	+0.025	
П04-0	Lug	35H	+0.007	-0.02	+0.018	
ГПЗ	Ball bearing	35	0	-0.011	-0.02	
No.1202						
К04-58	Fork	11A	+0.019	0		
К04-59	Bushing	$11П_p1_8$	+0.075	+0.040		

1/ Permissible deviation in individual part +0.1 mm.

Declassified in Part - Sanitized Copy Approved for Release 2012/01/04 : CIA-RDP80T00246A062100120001-8

Declassified in Part - Sanitized Copy Approved for Release 2012/01/04 : CIA-RDP80T00246A062100120001-8

APPENDIX 1C

Table of clearances and fits. Boosters БУ-13М, БУ-14 and БУ-14МС

Designation	Description	Size and fit	Maximum deviation, mm		Clearance (+) and interference (-) without coating, mm	Clearance (+) and interference (-) with coating, mm	Note
			upper	lower			
1	2	3	4	5	6	7	8
БУ-36001А	Head body	dia.30A	+0.023	0	+0.063 +0.02		
БУ-36004	Sleeve	dia.30X	-0.02	-0.04			
БУ-36001А	Head body	dia.34A	+0.027	0	+0.077 +0.025	+0.061 +0.001	
БУ-36007	Plug	dia.34X	-0.025	-0.050			
БУ-36007А	Head body	dia.26A	+0.023	0	+0.118 +0.06		
БУ-14017Н1	Distributors	dia.26Ш	-0.06	-0.095			
БУ-36001А	Head body	dia.28A	+0.023	0	+0.063 +0.02	+0.047 -0.004	
БУ-14018Н1	Piston	dia.28X	-0.02	-0.04			
БУ-36001А	Head body	dia.19T	0	-0.023	+0.009 -0.023		
980077	Ball bearing	dia.19	0	-0.009			
БУ-36004	Sleeve	dia.19A	+0.023	0	+0.007 +0.010 (to be adjusted by selection)		
БУ-36002	Duplicate slide valve	dia.19C	0	-0.014			

1	2	3	4	5	6	7	8
БУ-36002	Duplicate slide valve	dia.11A	+0.019	0	+0.010 +0.07 (to be adjusted by selection)		
БУ-36003	Slide valve	dia.11	0	-0.012			
БУ-36002	Duplicate slide valve	dia.16Ш$_3$	-0.045	-0.105	+0.140 +0.045		
БУ-36005	Bushing	dia.16A$_3$	+0.036	0			
БУ-14017М1	Distributor	dia.22Ш$_3$	-0.06	-0.13	+0.175 +0.06		
БУ-14018М1	Piston	dia.22A$_3$	+0.045	0			
БУ-14017М1	Distributor	dia.15X$_3$	-0.02	-0.07	+0.089 +0.02		
БУ-14018М1	Piston	dia.15A	+0.019	0			
БУ-14018М1	Piston	dia.75Ш	-0.095	-0.145		+0.175 +0.095	
БУ-14254	Cylinder	dia.75A	+0.03	0			
БУ-14018М1	Piston	dia.32X	-0.025	-0.050		+0.077 +0.025	
БУ-14254	Cylinder	dia,32A	+0.027	0			
БУ-14250	Cylinder nut	dia.32A	+0.027	0		+0.077 +0.025	
БУ-14018М1	Piston	dia.32X	-0.025	-0.050			
БУ-14250	Cylinder nut	dia.75C	0	-0.02		+0.050 0	
БУ-14254	Cylinder	dia.75A	+0.03	0			
БУ-36021	Eccentric bolt	dia.8A	-0.005	-0.015	+0.003 -0.005 (to be adjusted by selection)		
БУ-36012	Bell crank, right	dia.8A	+0.016	0			

Declassified in Part - Sanitized Copy Approved for Release 2012/01/04 : CIA-RDP80T00246A062100120001-8

Declassified in Part - Sanitized Copy Approved for Release 2012/01/04 : CIA-RDP80T00246A062100120001-8

1	2	3	4	5	6	7	8
БУ-86021	Eccentric bolt	dia. 4Д	-0.004	-0.012	+0.016 -0.005		
БУ-86018	Bell crank, left	dia.4Н	+0.004	-0.009			
ДОВ-82	Bolt	dia. 7Д	-0.005	-0.015	+0.019 -0.007		
БУ-86012	Bell crank, right	dia.7Н	+0.004	-0.012			
ДОВ-82	Bolt	dia. 7Д	-0.005	-0.015	+0.019 -0.007		
БУ-86018	Bell crank, left	dia.7Н	+0.004	-0.012			
ДОВ-82	Bolt	dia. 7Д	-0.005	-0.015	+0.019 -0.007		
БУ-86016	Shackle	dia.7Н	+0.004	-0.012			
БУ-86021	Eccentric bolt	dia.6С	0	-0.008	+0.017 -0.009		
ШМ-6	Bearing hinge	dia. 6П2а	+0.009	-0.009			
БУ-86015	Bolt	dia.8	0	-0.01	+0.026 0		
БУ-86016	Shackle	dia.8А	+0.016	0			
БУ-86015	Bolt	dia.8	0	-0.01	+0.026 0		
БУ-86012	Bell crank, right	dia.8А	+0.016	0			
БУ-86015	Bolt	dia.8	0	-0.01	+0.026 0		
БУ-86018	Bell crank, left	dia.8А	+0.016	0			
ДОВ-82	Bolt	dia. 7Д	-0.005	-0.015	+0.015 -0.005		
980077	Ball bearing	dia.7	0	-0.01			
ШМ-6	Hinge bearing	dia.14В	0	-0.012	+0.012 -0.019		
БУ-86008	Slide valve	dia.14Т	0	-0.019			
БУ-5861D	Shackle	dia.14Т	0	-0.019	+0.012 -0.019		
ШМ-6	Hinge bearing	dia.14В	0	-0.012			

1	2	3	4	5	6	7	8
БУ-5102D	Bolt	dia.6С	0	-0.008	+0.021 0		
БУ-5861D	Shackle	dia.6А	+0.013	0			
БУ-5102D	Bolt	dia.6С	0	-0.008	+0.017 -0.009		
ШМ-6	Hinge bearing	dia.6П2а	20.009	-0.009			
БУ-5645М	Lug	dia.22Н	-0.006	-0.017	+0.008 -0.017		
ШМ-12	Hinge bearing	dia.22В	0	-0.014			
БУ-18411	Swivel nipple	dia.11А$_3$	+0.035	0	+0.105 +0.020		
Д12-104	Filter frame	dia.11Х$_3$	-0.02	-0.07			
БУ-38008	Slide valve	dia.14Т	0	-0.019	+0.012 -0.019		
ШМ-6	Hinge bearing	dia.14В	0	-0.012			
БУ-13250А	Cylinder bushing	dia.47С	0	-0.017		+0.044 0	
БУ-13254А	Cylinder	dia.47А	+0.027	0			
БУ-13250А	Cylinder bushing	dia.32А	+0.027	0		+0.077 +0.025	
БУ-13018М1	Piston	dia.32Х	-0.025	-0.050			
БУ-13254А	Cylinder	dia.32А	+0.027	0		+0.077 +0.025	
БУ-13018М1	Piston	dia.32Х	-0.025	-0.050			
БУ-13254А	Cylinder	dia.47А	+0.027	0		+0.112 +0.050	
БУ-13018М1	Piston	dia.47Л	-0.050	-0.085			
БУ-13018М1	Piston	dia.23А$_3$	+0.045	0	-0.175 +0.06		
БУ-13017М1	Distributor	dia.23Ш$_3$	-0.06	-0.13			
БУ-36001А	Head body	dia.28А	+0.023	0	+0.063 +0.02	+0.047 -0.004	
БУ-13018М1	Piston	dia.28Х	-0.02	-0.04			

Declassified in Part - Sanitized Copy Approved for Release 2012/01/04 : CIA-RDP80T00246A062100120001-8

Declassified in Part - Sanitized Copy Approved for Release 2012/01/04 : CIA-RDP80T00246A062100120001-8

1	2	3	4	5	6	7	8
БУ-14018М1	Piston	dia.15A	+0.019	0	+0.007 +0.010 (to be adjusted by selection)		
БУ-14021М1	Plunger	dia.15C	0	-0.012			
БУ-14018М1	Piston	dia.21A	+0.023	0	+0.063 +0.02		
БУ-14021М1	Plunger	dia.21X	-0.02	-0.04			
БУ-18018М1	Piston	dia.15A	+0.019	0	+0.007 +0.010 (to be adjusted by selection)		
БУ-14021М1	Plunger	dia.15C	0	-0.012			
БУ-18018М1	Piston	dia.21A	+0.023	0	+0.063 +0.02		
БУ-14021М1	Plunger	dia.21X	-0.02	-0.04			
БУ-86004	Sleeve	dia.19A	+0.023	0	+0.010 +0.007 (to be adjusted by selection)		
БУ-86002С	Duplicate slide valve	dia.19C	0	-0.014			
БУ-86002С	Duplicate slide valve	dia.11A	+0.019	0	+0.010 +0.007 (to be adjusted by selection)		
БУ-86008	Slide valve	dia.11	0	-0.012			
БУ-86002С	Duplicate slide valve	dia.16Ш$_3$	-0.045	-0.105	+0.140 +0.045		
БУ-86005	Bushing	dia.16А$_3$	-0.035	0			
БУ-18254А	Cylinder	dia.32A	+0.027	0		+0.077 +0.025	
БУ-18018М1	Piston	dia.32X	-0.025	-0.050			

1	2	3	4	5	6	7	8
БУ-18254А	Cylinder	dia.47A	+0.027	0		+0.112 +0.050	
БУ-18018М1	Piston	dia.47Л	-0.050	-0.085			
БУ-18018М1	Piston	dia.23А$_3$	+0.045	0	+0.175 +0.06		
БУ-18017М1	Distributor	dia.23Ш$_3$	-0.06	-0.13			
БУ-36001А	Head unit	dia.20A	+0.023	0	+0.063 +0.02	+0.047 -0.004	
БУ-13018М1	Piston	dia.36X	-0.02	-0.04			
БУ-14018М1	Piston	dia.15A	+0.019	0	+0.007 +0.010 (to be adjusted by selection)		
БУ-14021М1	Plunger	dia.15C	0	-0.012			
БУ-14018М1	Piston	dia.21A	+0.023	0	+0.063 +0.02		
БУ-14021М1	Plunger	dia.21X	-0.02	-0.04			
БУ-13018М1	Piston	dia.15A	+0.019	0	+0.007 +0.010 (to be adjusted by selection)		
БУ-14021М1	Plunger	dia.15C	0	-0.012			
БУ-13018М1	Piston	dia.21A	+0.023	0	+0.063 +0.02		
БУ-14021М1	Plunger	dia.21X	-0.02	-0.04			
БУ-36004	Sleeve	dia.19A	+0.023	0	+0.010 +0.007 (to be adjusted by selection)		
БУ-36002С	Duplicate slide valve	dia.19C	0	-0.014			

Declassified in Part - Sanitized Copy Approved for Release 2012/01/04 : CIA-RDP80T00246A062100120001-8

Declassified in Part - Sanitized Copy Approved for Release 2012/01/04 : CIA-RDP80T00246A062100120001-8

1	2	3	4	5	6	7	8
БУ-36002С	Duplicate slide valve	dia.11A	+0.019	0	+0.010 +0.007 (to be adjusted by selection)		
БУ-36008	Slide valve	dia.11	0	-0.012			
БУ-36002С	Duplicate slide valve	dia. 16Ш$_3$	-0.045	-0.105	+0.140 +0.045		
БУ-36005	Bushing	dia.16A	+0.035	0			
БУ-14018М1	Piston	dia. 75Ш	-0.095	-0.145			
БУ-14254С	Cylinder	dia. 75A	+0.03	0		+0.175 +0.095	
БУ-14018М1	Piston	dia.32X	-0.025	-0.050			
БУ-14254С	Cylinder	dia.32A	+0.027			+0.077 +0.025	
БУ-14250	Cylinder nut	dia.75C	0	-0.02			
БУ-14254С	Cylinder	dia.75A	+0.03	0		+0.050 0	
БУ-18018М1	Piston	dia.15A	+0.019	0			
БУ-18017М1	Distributer	dia.15X$_3$	-0.02	-0.07	+0.026 +0.02		
БУ-36002	Duplicate slide valve	dia.11A	+0.019	0	+0.010 0.007 (to be adjusted by selection)		
БУ-38003	Slide valve	dia.11	0	-0.012			
БУ-18017М1	Distributer	dia.26Ш	-0.06	-0.095	+0.118 +0.06		
БУ-36001А	Head body	dia.26A	+0.023	0			

APPENDIX 11

Table of clearances and fits. Boosters БУ-1У, БУ-1М and БУ-1М-РВ

Designation	Description	Size and fit	Maximum deviation, mm		Clearance (+) and interference (-) without coating, mm	Clearance (+) and interference (-) with coating, mm
			upper	lower		
1	2	3	4	5	6	7
БУ-1101Б	Piston 1/	20A	+0.023		-0.025 -0.010	
БУ-1102Б	Sleeve 1/	20ПЖ	+0.039	+0.025		
БУ-1101Б	Piston 1/	21.5A	+0.023		-0.030 -0.010	
БУ-1206Б	Sleeve 1/		+0.039	+0.025		
БУ-1101Б	Piston 1/	9A	+0.016		+0.020 +0.013	
БУ-1206Б	Plunger 1/	9X	-0.013	-0.027		
БУ-1101Б	Piston 1/	5A	+0.013		+0.025 +0.010	
БУ-1064 БУ-1064М-РВ	Needle 1/	5Д	-0.004	-0.012		
БУ-1101Б	Piston	22A	+0.023		+0.063 +0.020	-
БУ-1091А	Bushing	22X	-0.020	-0.040		
БУ-1101Б	Piston	22A	+0.023		+0.153 +0.060	
БУ-1091А	Bushing	22Ш$_3$	-0.060	-0.130		

1/ To be adjusted by selection.

Declassified in Part - Sanitized Copy Approved for Release 2012/01/04 : CIA-RDP80T00246A062100120001-8

Declassified in Part - Sanitized Copy Approved for Release 2012/01/04 : CIA-RDP80T00246A062100120001-8

1	2	3	4	5	6	7
БУ-1205Б	Rod	27.5A	+0.023		+0.037	
БУ-1101Б	Piston	27.5C		-0.014	+0.00	-
БУ-1101Б	Piston	32X	-0.025	-0.050		+0.077
БУ-1058Б	Cylinder bushing	32A	+0.027			+0.025
БУ-1101Б	Piston	56Ш	-0.095	-0.145		+0.175
БУ-1010Б БУ-1010М	Cylinder	56A	+0.030			+0.095
БУ-1510Б	End piece unit 1/	13.1C		-0.012	+0.012	
БУ-1091А	Pushing 1/	13.1A	+0.019		+0.007	-
БУ-1102Б	Sleeve 1/	13A	+0.019		+0.012	
БУ-1518Б БУ-1518М	Slide valve 1/	13C		-0.012	+0.007	-
БУ-1936	Link	$6A_3$	+0.025		+0.069	+0.063
БУ-1040	Bolt	$6X_3$	-0.011	-0.044	+0.011	-0.003
БУ-1729	Shackle	19T		-0.023	+0.021	
State Standard ГОСТ 5720-51	Ball bearing No.1006	19	+0.002	-0.021	-0.025	-
БУ-1936	Link	19T		-0.023	+0.021	
State Standard ГОСТ 6121-39	Ball bearing No.6	19	+0.002	-0.021	-0.025	-

1/ To be adjusted by selection.

1	2	3	4	5	6	7
БУ-1010Б	Cylinder	56A	+0.030			+0.090
БУ1058Б	Cylinder bushing	56X	-0.030	-0.060		+0.030
БУ-1205Б	Rod	32X	-0.025	-0.050		+0.077
БУ-1010Б БУ-1010М	Cylinder	32A	+0.027			+0.025
БУ-1070	Filter	$11X_3$	-0.020	-0.070	+0.105	
БУ-1415А	Pipe connection	$11A_3$	+0.035		+0.020	-
БУ-1518Б БУ-1518М	Slide valve	7.5A	+0.016		+0.015 -0.016	-
БУ-1567В	Damper body	7.5Н2а	+0.016	+0.001		
БУ-1881В	Head	$8A_3$	+0.030		-0.065	-0.105
БУ-1883	Bushing	8Пр.18	+0.065	+0.035	-0.005	-0.029
БУ-1518В БУ-1518М	Slide valve	7.5A	+0.016			
БУ-1568Б	Washer	$7.5X_4$	-0.050	-0.150	+0.166 +0.050	-
БУ-1510В	End piece body	6A	+0.013		+0.057	+0.051
БУ-1041	Bolt	$6X_3$	-0.011	-0.044	+0.011	-0.003
БУ-1800А	Head unit	$6A_3$	+0.025		+0.069	+0.063
БУ-1040	Bolt	$6X_3$	-0.011	-0.044	+0.011	-0.003
БУ-1626У	End piece	42Г	-0.007	-0.035	+0.017	-
ТУ 100-53	Ball bearing No.900706	42	+0.003	-0.024	-0.038	

Declassified in Part - Sanitized Copy Approved for Release 2012/01/04 : CIA-RDP80T00246A062100120001-8

Declassified in Part - Sanitized Copy Approved for Release 2012/01/04 : CIA-RDP80T00246A062100120001-8

Appendix 12

Booster 5V-105. Outline Dimensions Drawing

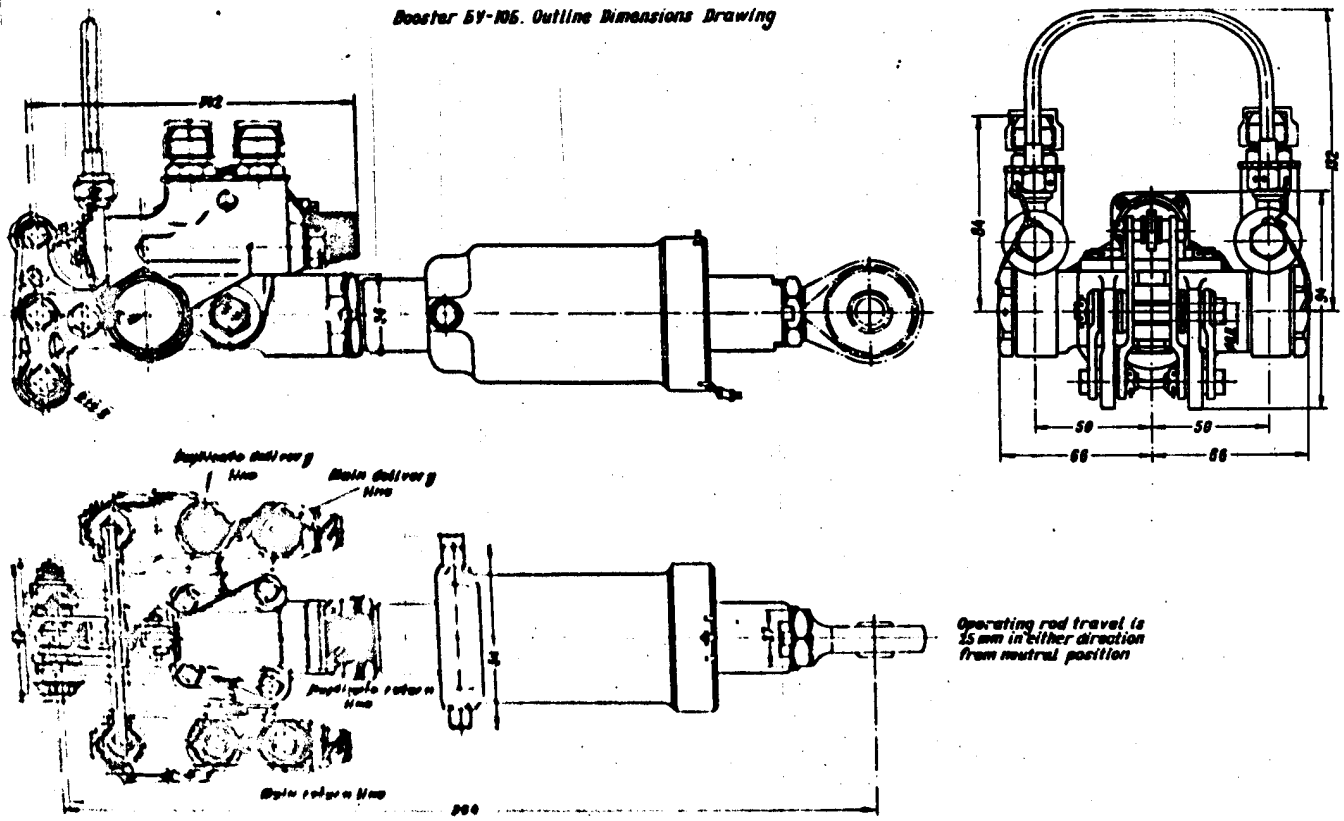

Declassified in Part - Sanitized Copy Approved for Release 2012/01/04 : CIA-RDP80T00246A062100120001-8

Declassified in Part - Sanitized Copy Approved for Release 2012/01/04 : CIA-RDP80T00246A062100120001-8

Appendix 13

Booster 5V-10M. Outline Dimensions Drawing

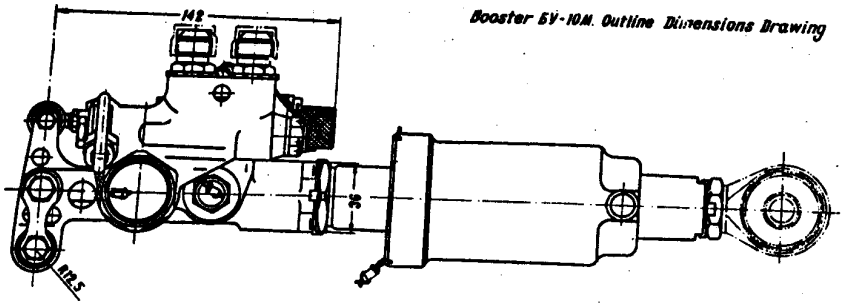

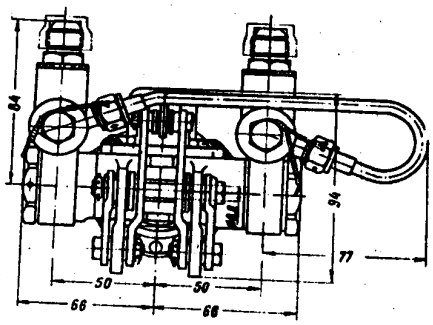

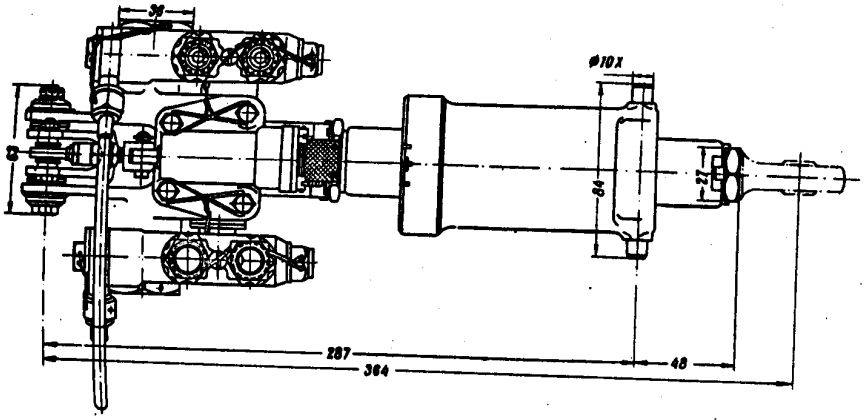

Operating rod travel is 25 mm in either direction from middle position shown in the drawing

Appendix 14

Booster 5V-10. Outline Dimensions Drawing

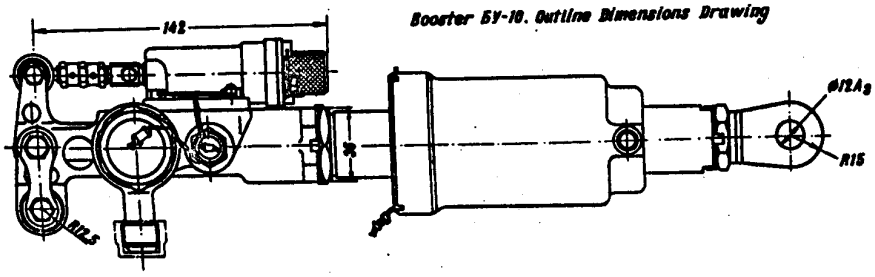

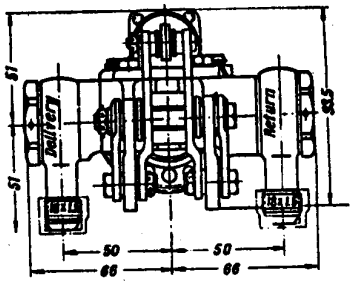

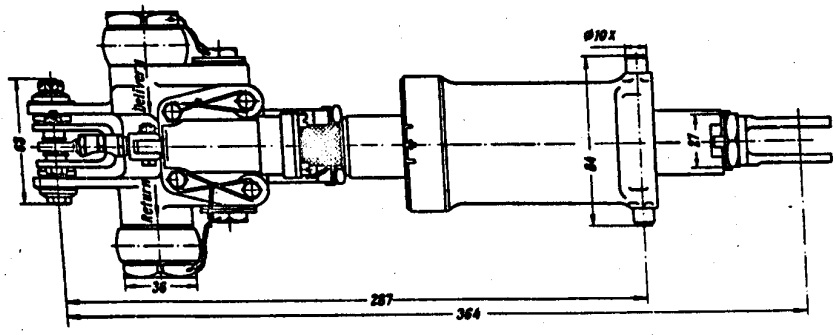

Operating rod travel is 25 mm in either direction from middle position shown in the drawing

Declassified in Part - Sanitized Copy Approved for Release 2012/01/04 : CIA-RDP80T00246A062100120001-8

Declassified in Part - Sanitized Copy Approved for Release 2012/01/04 : CIA-RDP80T00246A062100120001-8

Appendix 17

Booster 5Y-13M. Outline Dimensions Drawing

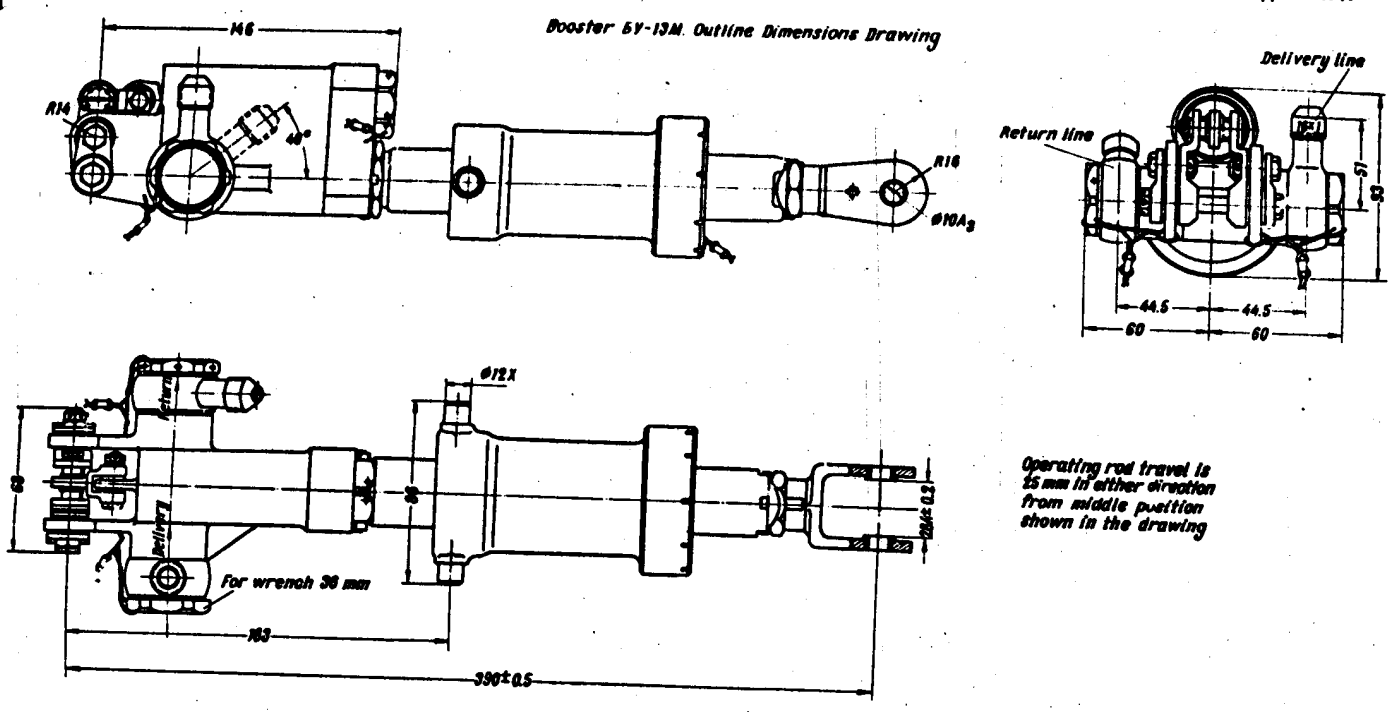

Operating rod travel is 15 mm in either direction from middle position shown in the drawing

Appendix 18

Booster 5Y-14M. Outline Dimensions Drawing

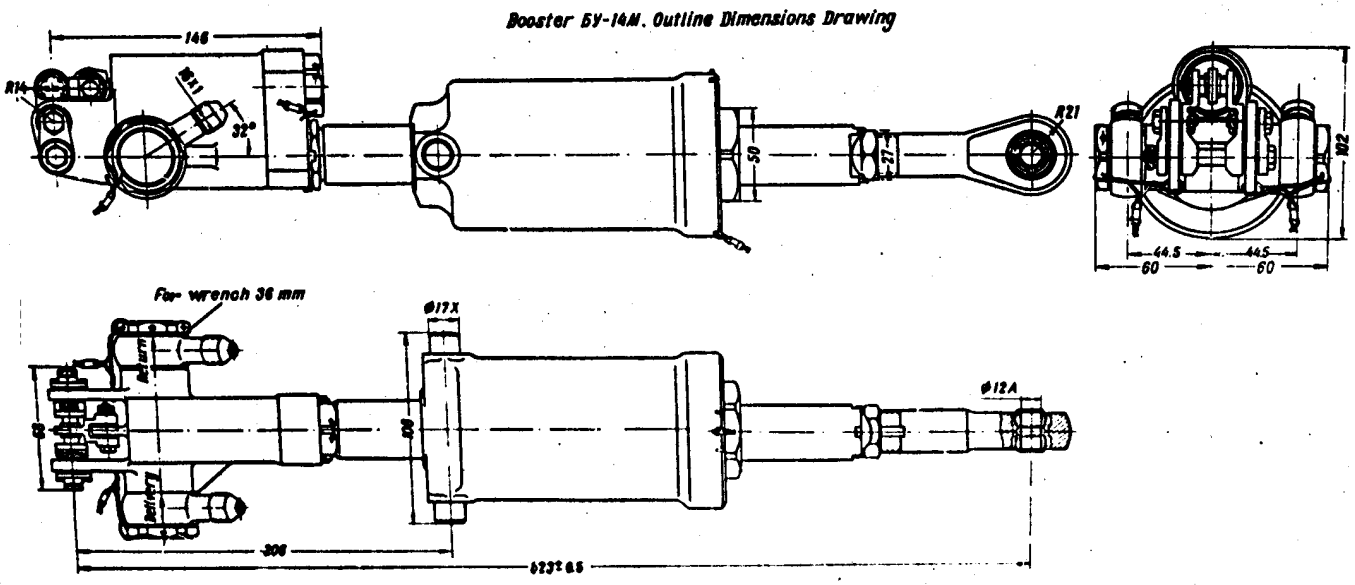

Declassified in Part - Sanitized Copy Approved for Release 2012/01/04 : CIA-RDP80T00246A062100120001-8

Declassified in Part - Sanitized Copy Approved for Release 2012/01/04 : CIA-RDP80T00246A062100120001-8

Appendix 19

Booster БУ-14МС. Outline Dimensions Drawing

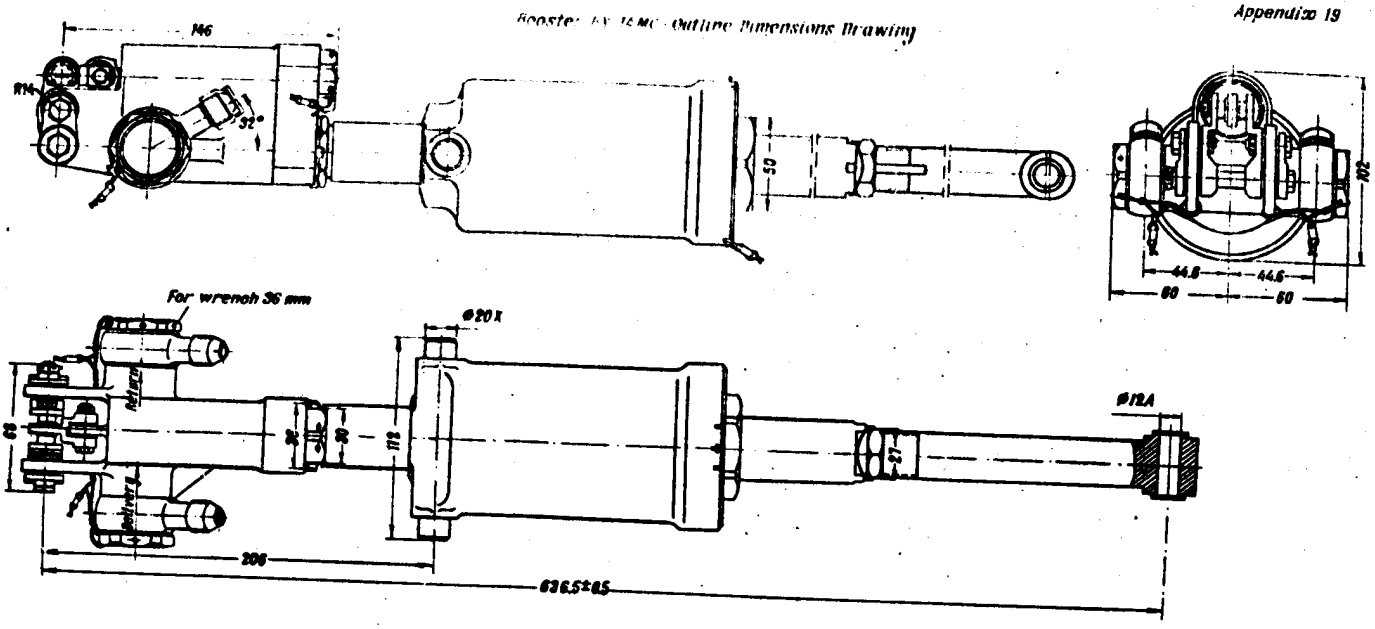

Appendix 20

Booster БУ-1У. Outline Dimensions Drawing

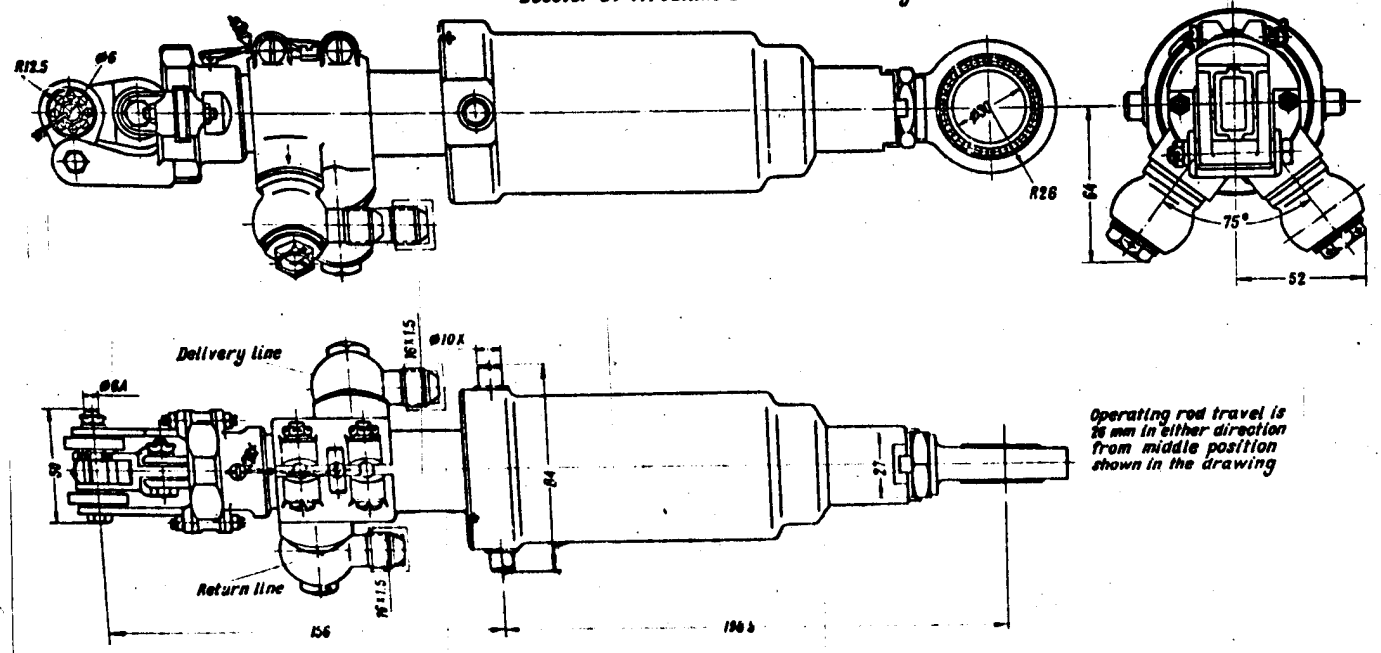

Operating rod travel is 26 mm in either direction from middle position shown in the drawing

Declassified in Part - Sanitized Copy Approved for Release 2012/01/04 : CIA-RDP80T00246A062100120001-8

Declassified in Part - Sanitized Copy Approved for Release 2012/01/04 : CIA-RDP80T00246A062100120001-8

Appendix 21

Booster 6V 1M Outline Dimensions Drawing

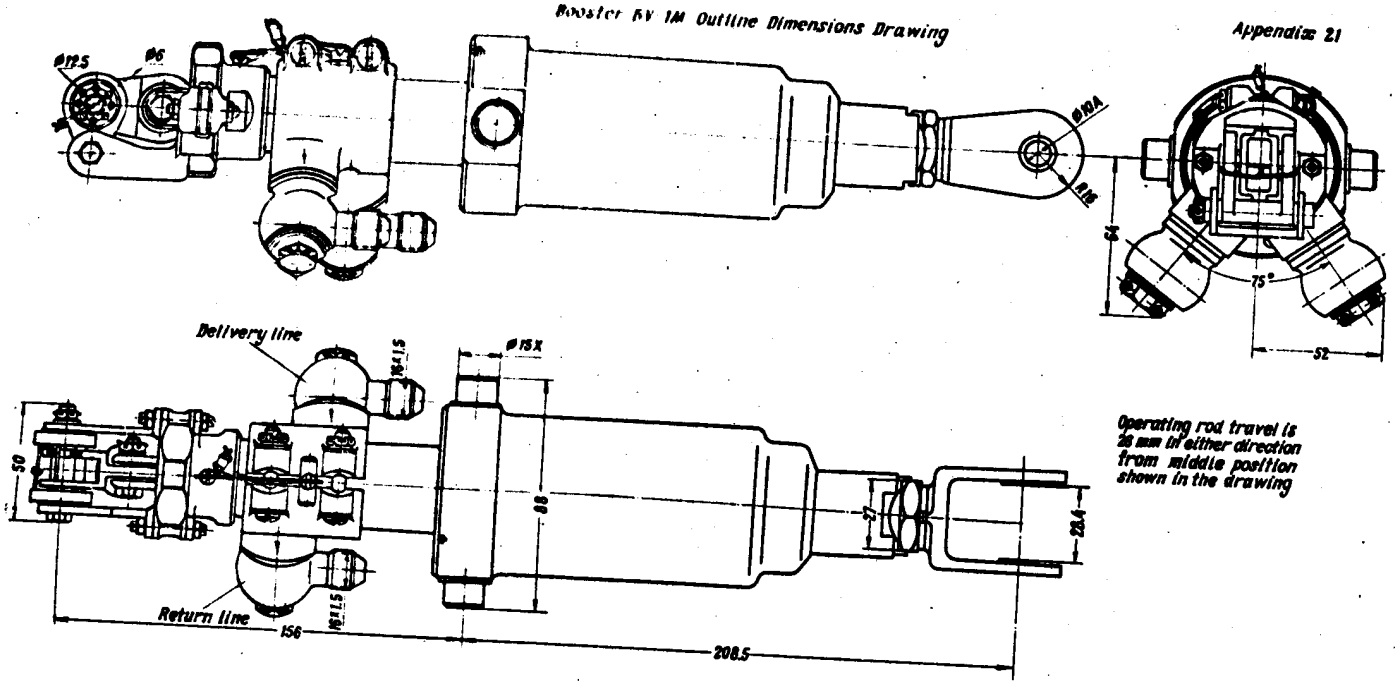

Operating rod travel is 28 mm in either direction from middle position shown in the drawing

Appendix 22

Booster 6V-1M-PB. Outline Dimensions Drawing

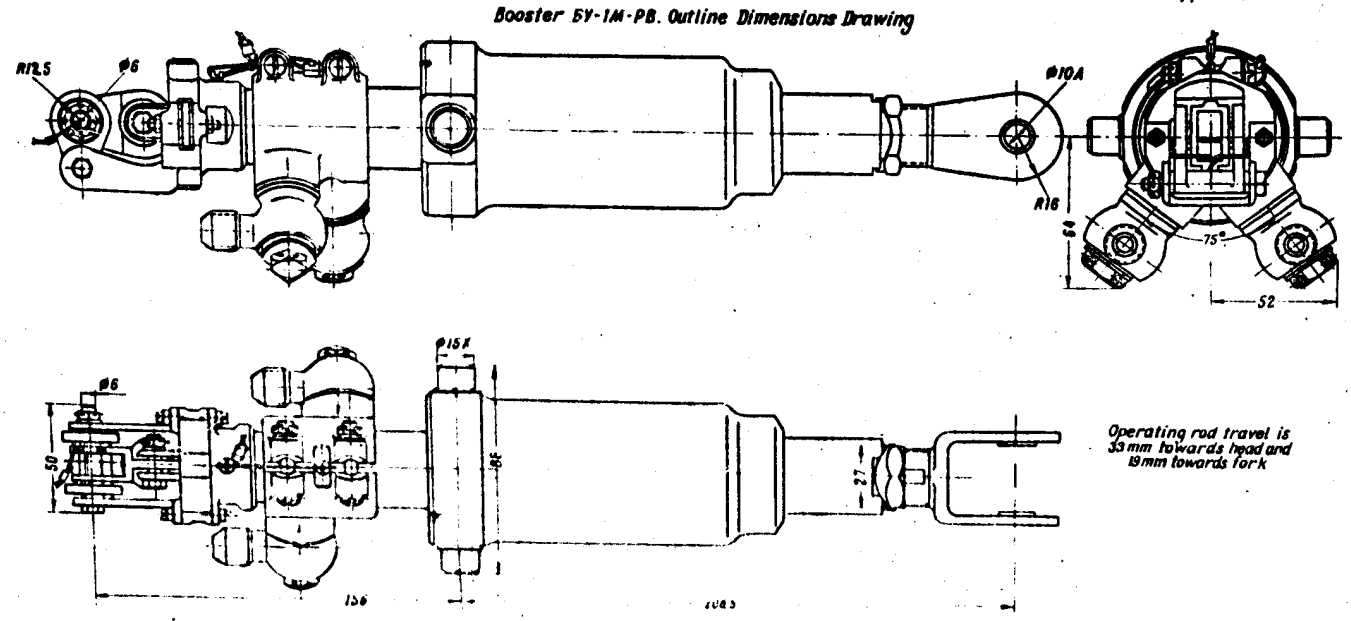

Operating rod travel is 33 mm towards head and 19 mm towards fork

Declassified in Part - Sanitized Copy Approved for Release 2012/01/04 : CIA-RDP80T00246A062100120001-8

Declassified in Part - Sanitized Copy Approved for Release 2012/01/04 : CIA-RDP80T00246A062100120001-8

SUPPLEMENT

Checking BV-13M and BV-14M Hydraulic Boosters for Condition and Fluid Pressure in Return Line

Special research work carried out with the aim of determining the operating capability of hydraulic boosters BV-13M and BV-14M has revealed that in some boosters the manufacturing sizes of the damper unit of the main distributing slide valve (the length of ball travel and the diameter of the damper body seat) deviate from the rated sizes. This results in uneven and jerky motion of the aircraft control stick (Fig.1).

In view of the above it will be necessary to check hydraulic boosters for fluid pressure in the return line and to discard the boosters whose dampers are found to be defective.

In subsequent operation such checks should be carried out during the 25-hour inspections and also on requests of pilots who are not satisfied with the functioning of the aircraft control system.

When checking hydraulic boosters for condition and fluid pressure in the return line, use should be made of a special apparatus. The check must be performed as follows:

1. Open the panel providing access to hydraulic boosters BV-14M (or BV-14MC) or the access hatch to booster BV-13M.

2. Disconnect the spring feel mechanisms of the elevator (stabilizer) and aileron control systems. Move aside the spring feel mechanisms so that they do not interfere with free motion of control bell cranks.

Declassified in Part - Sanitized Copy Approved for Release 2012/01/04 : CIA-RDP80T00246A062100120001-8

Declassified in Part - Sanitized Copy Approved for Release 2012/01/04 : CIA-RDP80T00246A062100120001-8

50X1-HUM

3. Disconnect the return line flexible hoses from the pipe connections of the hydraulic booster.

4. Install the apparatus for measuring the operating fluid pressure in the booster return line between the booster return pipe connection and the return line flexible hose (Fig.2).

5. Open the throttle valve of the apparatus to capacity.

6. Connect a ground hydraulic trolley to the aircraft booster hydraulic system. Switch on the trolley pump.

7. Switch on the hydraulic booster of the elevator (stabilizer), and check the apparatus for tightness by shifting the control stick several times.

8. Check the pressure in the return line of the hydraulic booster by the pressure gauge of the testing apparatus by shifting the control stick with maximum speed in the longitudinal direction through the whole length of its travel.

The pressure in the line must not exceed 8 kg/sq.cm.

9. If the pressure in the return line beyond the hydraulic booster is too high (above 8 kg/sq.cm.):

(a) check to see that the throttle valve of the apparatus is open to full capacity;

(b) check the return line filters for cleanliness and wash the filters;

(c) check the hose inner section for separation and bulging of the rubber; if such defects are evidenced, replace the booster flexible hose;

(d) check the return pipe line for crumpling of pipes.

The above checks should be carried out in the sequence just outlined; after each operation check the pressure in the return line in accordance with Item 8.

10. Check operating condition of the elevator (stabilizer) hydraulic booster, to this end:

(a) close the throttle valve of the testing apparatus; with the aircraft control stick shifted with maximum speed

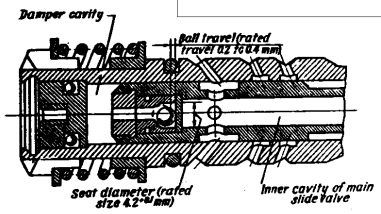

Fig. 1. Diagram of Main Slide Valve Operation of Hydraulic Boosters БУ-14М and БУ-13М with Increased Length of Ball Travel and Diameter of Damper Body Seat as Compared to Rated Sizes

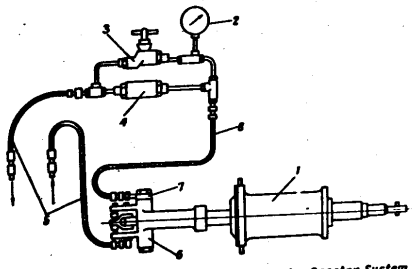

Fig. 2. Connection of Testing Apparatus to Hydraulic Booster System
1—hydraulic booster under check; 2—pressure gauge, rated for 60 kg/sq.cm; 3—throttle valve; 4—return valve; 5—aircraft hose; 6—inlet pipe connection; 7—outlet pipe connection; 8—apparatus hose (beginning of opening at 12 kg/sq.cm, full opening at 12 kg/sq.cm)

50X1-HUM

Declassified in Part - Sanitized Copy Approved for Release 2012/01/04 : CIA-RDP80T00246A062100120001-8

Declassified in Part - Sanitized Copy Approved for Release 2012/01/04 : CIA-RDP80T00246A062100120001-8

50X1-HUM

through the whole length of its travel, the pressure of the hydraulic fluid must be within 10 to 20 kg/sq.cm. as registered by the pressure gauge of the testing apparatus;

(b) shift uniformly the aircraft control stick 4 or 5 times through the whole length of its travel. After that pull the control stick towards yourself as far as it will go, and supporting it slightly with one finger push it slightly off by short jerks through 20 - 30 mm. If the hydraulic booster is in good repair, the aircraft control stick will move to the forward position without any twitching or jerks towards diving.

In case of twitching or jerks towards diving the hydraulic booster is not fit for service and must be replaced by a new one.

11. Check operating condition of the aileron hydraulic booster after installing the testing apparatus in accordance with Item 4 of the present Supplement, to this end:

(a) switch on the aileron hydraulic booster;

(b) close the throttle valve of the apparatus;

(c) shift uniformly the aircraft control stick from right to left and vice versa 4 or 5 times through the whole length of its travel. After that move the control stick to the left as far as it will go, and supporting it slightly with one finger, push it slightly to the right by short jerks through 20 - 30 mm each time. The aircraft control stick must move to the extreme right position without any twitching or jerks towards the starboard bank.

In case of twitching or jerks of the control stick towards the starboard bank, the hydraulic booster should be replaced by a new one.

12. After the installation of the hydraulic booster in the aircraft, check its operating capability in accordance with Item 10 (in case of boosters EV-14M and EV-14MC) or Item 11 (in case of boosters EV-13M).

50X1-HUM

Declassified in Part - Sanitized Copy Approved for Release 2012/01/04 : CIA-RDP80T00246A062100120001-8

Declassified in Part - Sanitized Copy Approved for Release 2012/01/04 : CIA-RDP80T00246A062100120001-8

50X1-HUM

13. Connect the ground hydraulic trolley to the main hydraulic system of the aircraft. Switch on the pump of the hydraulic trolley.

14. Check the pressure in the return line of hydraulic boosters БУ-18М and БУ-14М (or БУ-14МС) when they are operated from the main hydraulic system in accordance with Items 8 and 9.

15. Connect the spring feel mechanisms of the elevator (stabilizer) and aileron control systems.

16. Check the aircraft control in accordance with the Operating Instructions in effect.

50X1-HUM

Declassified in Part - Sanitized Copy Approved for Release 2012/01/04 : CIA-RDP80T00246A062100120001-8

Declassified in Part - Sanitized Copy Approved for Release 2012/01/04 : CIA-RDP80T00246A062100120001-8

50X1-HUM

Page Denied

Declassified in Part - Sanitized Copy Approved for Release 2012/01/04 : CIA-RDP80T00246A062100120001-8