Sanitized Copy Approved for Release 2010/05/27 : CIA-RDP80T00556A000100270001-6

NATIONAL PHOTOGRAPHIC INTERPRETATION CENTER

Top Secret

25X1

basic imagery interpretation report

PRC Ballistic Missile Early Warning System (S)

BE: Various
PRC

Top Secret

25X1

RCA-03/0004/79
DECEMBER 1979
Copy 49

Sanitized Copy Approved for Release 2010/05/27 : CIA-RDP80T00556A000100270001-6

Sanitized Copy Approved for Release 2010/05/27 : CIA-RDP80T00556A000100270001-6

Page Denied

Sanitized Copy Approved for Release 2010/05/27 : CIA-RDP80T00556A000100270001-6

Sanitized Copy Approved for Release 2010/05/27 : CIA-RDP80T00556A000100270001-6

INSTALLATION OR ACTIVITY NAME					COUNTRY
PRC Ballistic Missile Early Warning System					CH
UTM COORDINATES	GEOGRAPHIC COORDINATES	CATEGORY	BE NO.	COMIREX NO	NIETB NO.
NA	See Below	See Below	See Below	See Below	See Below

MAP REFERENCE

ACIC, USATC, Series 200, Various sheets, scale 1:200,000 (UNCLASSIFIED)

LATEST IMAGERY USED	NEGATION DATE (If required)
[redacted]	NA

25X1

Installation Name	Geographic Coordinates	Category	BE No	COMIREX No	NIETB (MRN) No)
Wulukeli (Wu-lu-ko-li) AW Radar Fac	40-50-10N 087-04-27E	[redacted]			
Wulukeli (Wu-lu-ko-li) South AW Radar Fac	40-47-50N 087-04-08E				
Alashanyouqi (A-la-shan-yu chi) Aw Radar Fac	39-05-56N 101-52-09E				
Gonghui (Kung-hui) AW Radar Fac	41-35-00N 114-28-40E				
Abahanarqi (A-pa-ha-na-erh-chi) AW Radar Fac	43-47-14N 115-39-59E				
Dahar (Ta-ha-erh) AW Radar Fac	47-31-50N 124-14-00E				
Qingcheng (Ching-cheng) AW Radar Fac	46-52-22N 127-36-40E				
Shuanghezhen (Shuang-ho-chen) AW Radar Fac	46-00-42N 130-16-00E				
Huinan (Hui-nan) AW Radar Fac	42-40-25N 126-04-40E				
Xuanhua (Hsuan-hua) Phasat Array Radar Fac	40-27-07N 115-06-59E				

25X1

ABSTRACT

1. [redacted] This report discusses the activities observed at the eight operational ballistic missile early warning system (BMEWS) facilities [redacted] in the Peoples Republic of China (PRC). The radar equipment predominantly used at these operational facilities has been the TREE FORK 2 and Suuji D radars and the Suuji E at Dahar. 25X1 25X1

2. [redacted] The following eight operational BMEWS facilities and the Xuanhua Phased-Array Radar Facility are in the northern half of the PRC and are capable of providing radar coverage of most Soviet land-based missile facilities as well as SLBM launches from the northern Sea of Japan. 25X1

Wulukeli AW Radar Facility
Wulukeli AW Radar Facility South
Alashanyouqi AW Radar Facility
Gonghui AW Radar Facility
Abahanarqi AW Radar Facility
Dahar AW Radar Facility
Qingcheng AW Radar Facility
Shuanghezhen AW Radar Facility
Huinan AW Radar Facility
Xuanhua Phased-Array Radar Facility

3. (U) Two location maps, 24 annotated photographs, three perspective drawings, and mensural data are included in this report.

25X1

[redacted]

Sanitized Copy Approved for Release 2010/05/27 : CIA-RDP80T00556A000100270001-6

Sanitized Copy Approved for Release 2010/05/27 : CIA-RDP80T00556A000100270001-6

INTRODUCTION

[redacted] 25X1

BASIC DESCRIPTION

6. [redacted] The TREE FORK 2 and Suuji D radars are currently being used at the eight operational BMEWS facilities. [redacted] The TREE FORK 2, a large Yagi antenna, was first seen in January 1971 at the now abandoned Suuji Air Warning (AW) Radar Facility [redacted]. The Suuji D large Yagi antenna was first seen at Alashanyouqi AW Radar Facility in January 1973. 25X1 25X1 25X1 25X1

Table 1. Facilities within the PRC BMEWS Network

This table in its entirety is classified TOP SECRET RUFF

25X1

Item No	Facility		Current EOB	Military Region
1	Wulukeli AW Radar Fac Wulukeli AW Radar Fac South		May 79 1 TREE FORK 2 Jun 79 1 TREE FORK 2	500 500
2	Alashanyouqi AW Radar Fac		Jun 79 2 Suuji D 2 TREE FORK 2	460
3	Gonghui A Radar Fac		Mar 79 3 TREE FORK 2 2/Suuji D	490
4	Abahanarqui AW Radar Fac		May 79 2 TREE FORK 2 2 Suuji D/ TREE FORK 2 (1 folded down)	490
5	Dahar AW Radar Fac		Jun 79 2 TREE FORK 2 2 Suuji D	470
6	Qingcheng AW Radar Fac		Jun 79 2 TREE FORK 2 2 Suuji D	470
7	Shuanghezhen AW Radar Fac		May 79 1 TREE FORK 2 1 Suuji D 1 prob TREE FORK 2 1 TREE FORK	470
8	Huinan AW Radar Fac		2/Suuji D Apr 79 3 Suuji D/ TREE FORK 2 1 Suuji D	470

[redacted] 25X1

Sanitized Copy Approved for Release 2010/05/27 : CIA-RDP80T00556A000100270001-6

Sanitized Copy Approved for Release 2010/05/27 : CIA-RDP80T00556A000100270001-6

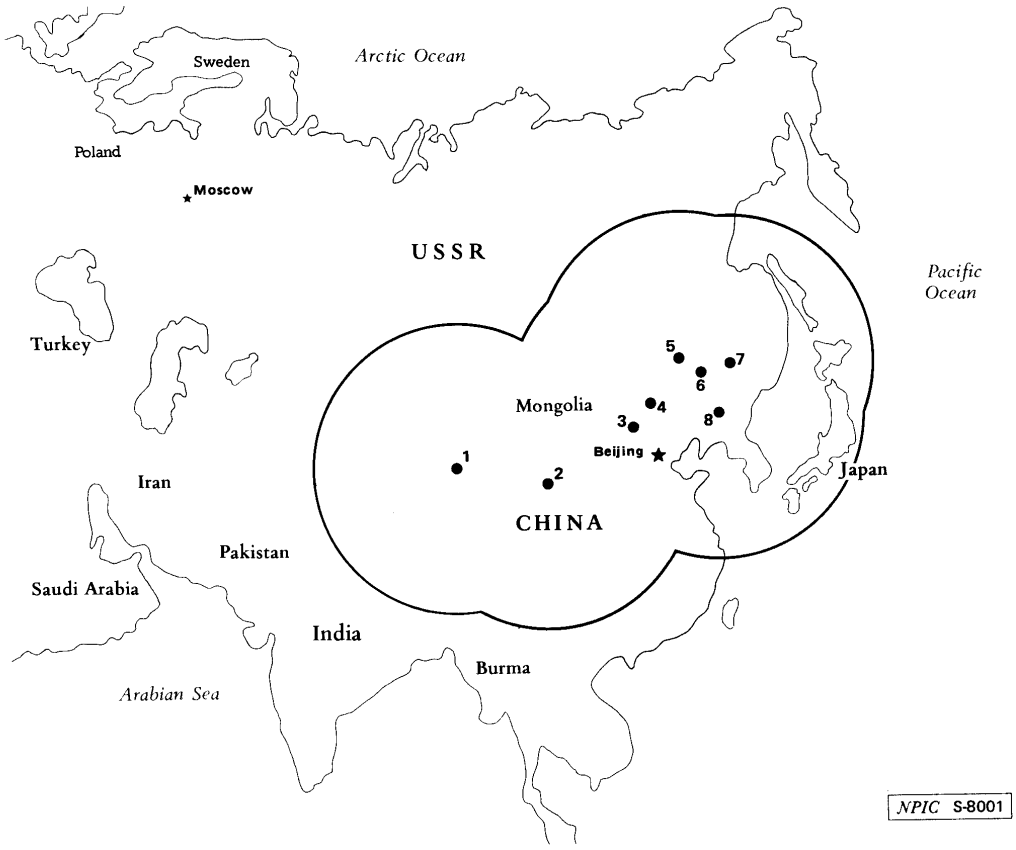

FIGURE 1. LOCATION OF BMEWS FACILITIES AND FANS OF COVERAGE, PRC

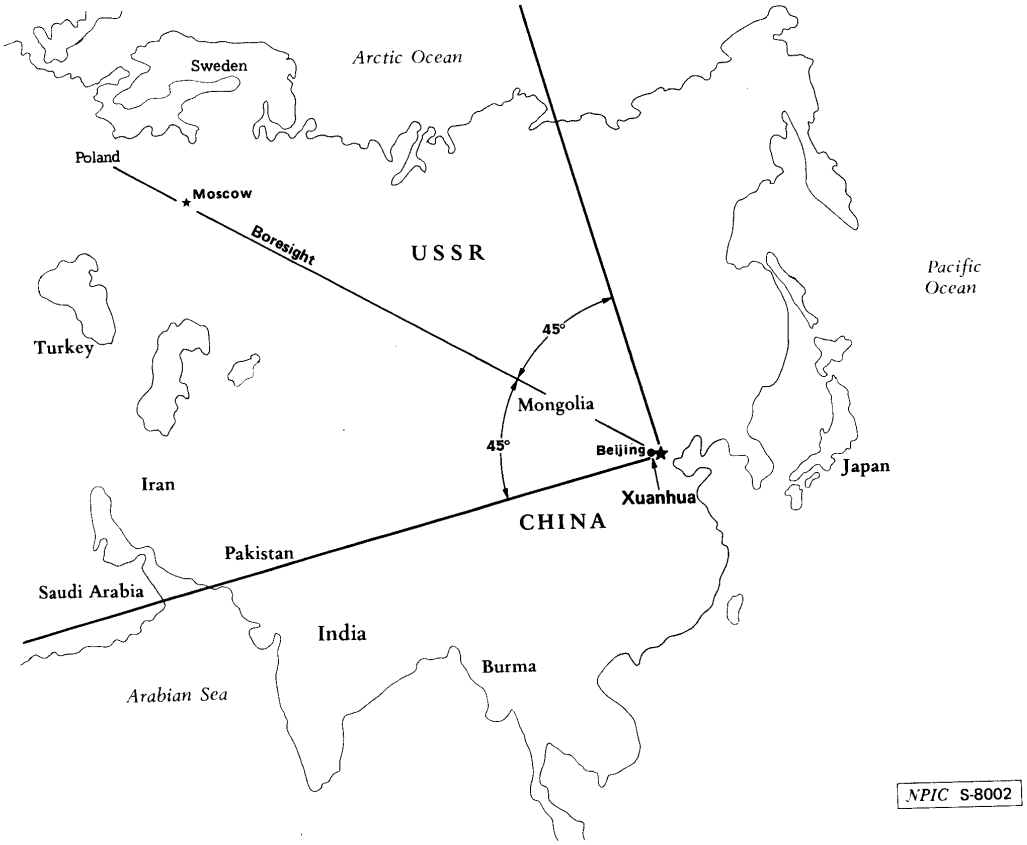

FIGURE 2. XUANHUA PHASED-ARRAY COVERAGE

Sanitized Copy Approved for Release 2010/05/27 : CIA-RDP80T00556A000100270001-6

Sanitized Copy Approved for Release 2010/05/27 : CIA-RDP80T00556A000100270001-6

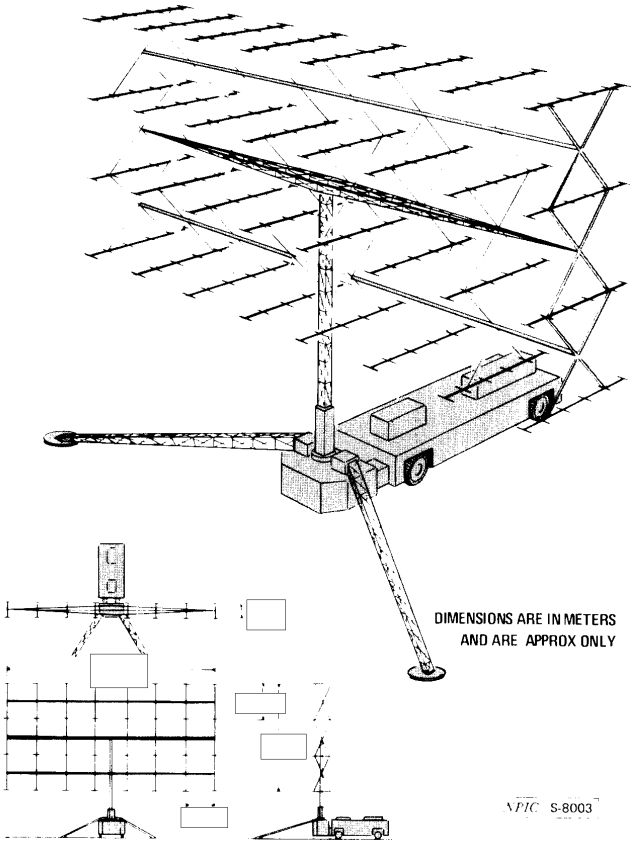

25X1
25X1
25X1
25X1
25X1

FIGURE 3. PERSPECTIVE DRAWING OF THE TREE FORK 2 RADAR

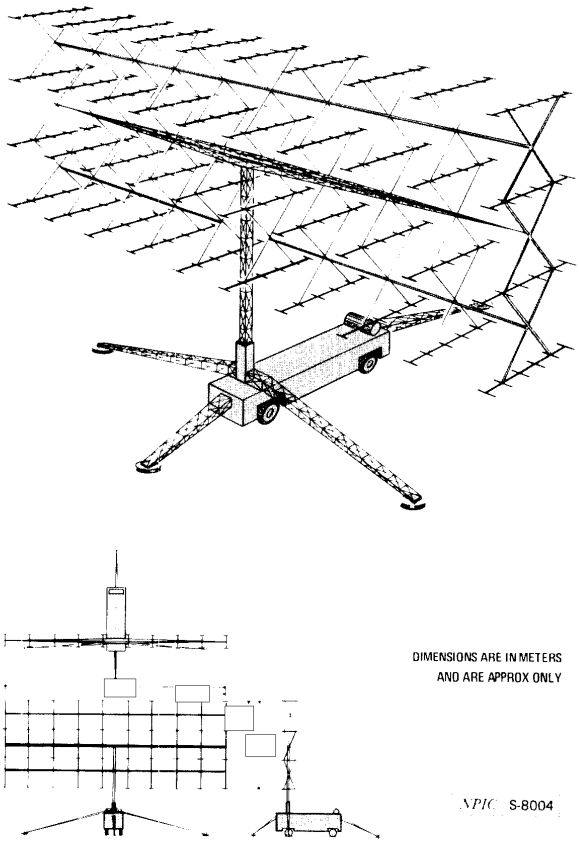

FIGURE 4. PERSPECTIVE DRAWING OF THE SUUJI D RADAR

7. (TSR) The TREE FORK 2 (Figure 3) consists of 32 Yagi antenna elements--eight across the [redacted] horizontal boom and stacked four high. The Suuji D (Figure 4) has 40 Yagi antenna elements--ten across the [redacted] meter-long horizontal boom and stacked four high. 25X1 25X1 25X1 25X1

Sanitized Copy Approved for Release 2010/05/27 : CIA-RDP80T00556A000100270001-6

Sanitized Copy Approved for Release 2010/05/27 : CIA-RDP80T00556A000100270001-6

25X1

25X1
25X1

Xinjiang MR

8. (TSR) Wulukeli AW Radar Facility (Figure 5) and Wulukeli AW Radar Facility South (Figure 6) are both on the southeastern edge of the village of Wulukeli. The terrain is flat or relatively level for at least 0.5 nm around each of the sites with an elevation of 3,000 feet. The distance between Wulukeli and Wulukeli South is 2,790 meters. TREE FORK 2 and Suuji D radars have been seen at this facility since as early as October 1975. On [redacted], one TREE FORK 2 radar was at each facility.

25X1

25X1

10. (TSR) HF communications facilities within a 9-nm radius of Wulukeli include Wulukeli Radcom Station South [redacted] with three horizontal dipole antennas and Wulukeli Radcom Station (BE [redacted] with at least six, but probably seven, rhombic antennas.

25X1
25X1

RCA-03/0004/79

25X1

Sanitized Copy Approved for Release 2010/05/27 : CIA-RDP80T00556A000100270001-6

25X1
Sanitized Copy Approved for Release 2010/05/27 : CIA-RDP80T00556A000100270001-6

Page Denied

Sanitized Copy Approved for Release 2010/05/27 : CIA-RDP80T00556A000100270001-6

Sanitized Copy Approved for Release 2010/05/27 : CIA-RDP80T00556A000100270001-6

25X1

Lanzhou MR

11. [redacted] Alashanyouqi AW Radar Facility is 10 nm southeast of the town of Alashanyouqi. The terrain is flat for at least 0.5 nm around the site with an elevation of 4,600 feet. TREE FORK 2 and Suuji D radars have been seen at this facility since as early as January 1973. On [redacted] two TREE FORK 2 and four Suuji D radars were observed (Figure 7). Control area A has two TREE FORK 2 radars (Figure 8), control area B has one Suuji D radar (Figure 9), control area C has one Suuji D radar (Figure 10), and control area D has two Suuji D radars (Figure 11). Control areas A through D each consists of three barracks, one messhall, two radar control buildings, and two small support buildings. In addition, a housing/administration/support area, 250 meters northeast of area D, consists of one administration building, 11 barracks, and two messhalls (Figure 7). These additional housing/support facilities may indicate that Alashanyouqi functions as a BMEWS radar training school. These additional facilities may be necessary because the Alashanyouqi radar site is the only site that is involved with CSL-2 space booster launches from Shuangchengzi (Shuang-heng-tzu) Missile Test Center ([redacted] and CSS-2 launches from Wuzhai (Wu-chai) MTC ([redacted] to the Minfeng (Min-feng) Missile Impact Area [redacted]

25X1
25X1
25X1
25X1
25X1
25X1
25X1
25X1

13. (TSR) An HF communications area adjacent to and east of the housing/support area consists of four horizontal dipole antennas, two control buildings, and a probable buried telecommunications cable (Figure 12). The probable telecommunications cable extends approximately 7.0 nm in a southeasterly direction; it could not be detected beyond the 7.0-nm point.

(Continued p. 12)

25X1

RCA-03/0004/79

Sanitized Copy Approved for Release 2010/05/27 : CIA-RDP80T00556A000100270001-6

25X1
Sanitized Copy Approved for Release 2010/05/27 : CIA-RDP80T00556A000100270001-6

Page Denied

Next 7 Page(s) In Document Denied

Sanitized Copy Approved for Release 2010/05/27 : CIA-RDP80T00556A000100270001-6

Sanitized Copy Approved for Release 2010/05/27 : CIA-RDP80T00556A000100270001-6

25X1

25X1

25X1

Shenyang MR

20. (TSR) Dahar AW Radar Facility (Figure 18) is 1.3 nm south of the village of Dahar and occupies the nonoperational Dahar Airfield. The terrain is relatively level for at least 0.5 nm around the site with an elevation of 500 feet. One TREE FORK 2 and one Suuji D have been observed in area A since as early as March 1975, and currently these two radars are atop two abandoned POL bunkers which serve as radar control bunkers (Figure 19). On one Suuji D and one TREE FORK 2 had been newly deployed to the facility in area B, and, as of June 1979 (Figure 20), the TREE FORK 2 radar in area B occupied the site where the Suuji E was usually seen.

21. The Suuji E, a large Yagi antenna, was first seen on imagery of at Dahar AW Radar Facility and was subsequently seen in configurations ranging from partially dismantled to fully assembled with all the Yagi antenna elements in place (Figure 21). The Suuji E had been removed when this facility was imaged on and has not been seen on subsequent coverages.

25X1

25X1

25X1

25X1

25X1

25X1

25X1

25X1

RCA-03/0004/79

Sanitized Copy Approved for Release 2010/05/27 : CIA-RDP80T00556A000100270001-6

25X1
Sanitized Copy Approved for Release 2010/05/27 : CIA-RDP80T00556A000100270001-6

Page Denied

Next 1 Page(s) In Document Denied

Sanitized Copy Approved for Release 2010/05/27 : CIA-RDP80T00556A000100270001-6

Sanitized Copy Approved for Release 2010/05/27 : CIA-RDP80T00556A000100270001-6

25X1

25X1

25X1

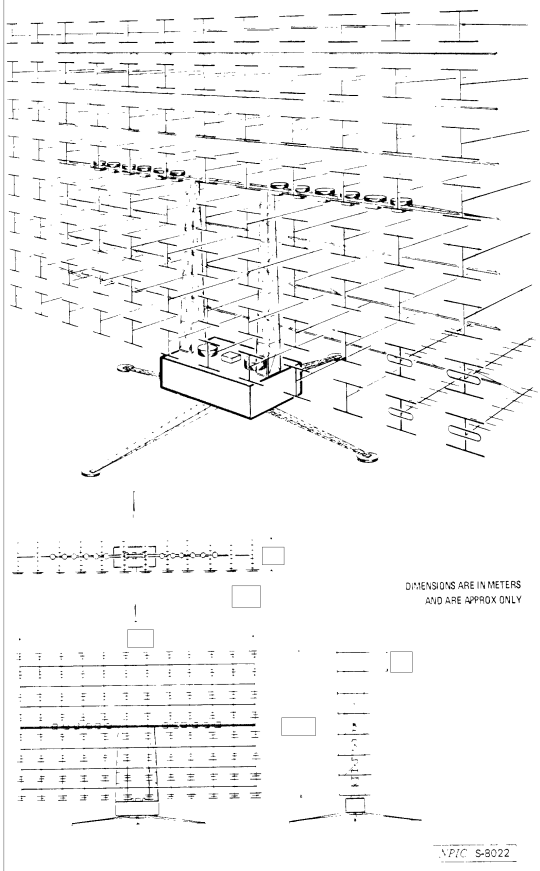

25X1

25X1

25X1

25X1

25X1

FIGURE 22. PERSPECTIVE DRAWING OF THE SUUJI E RADAR

RCA-03/0004/79

25X1

Sanitized Copy Approved for Release 2010/05/27 : CIA-RDP80T00556A000100270001-6

Sanitized Copy Approved for Release 2010/05/27 : CIA-RDP80T00556A000100270001-6

 25X1

25X1

23. (TSR) No HF communications facility has been identified within 9 nm of Dahar; however, HF communications could be transmitted via landline to a remote HF radio communications facility and then transmitted to Beijing.

24. (TSR) Qingcheng AW Radar Facility is 4.4 nm east of the village of Qingcheng. The terrain is relatively level for at least 0.5 nm around the site with an elevation of 700 feet. The TREE FORK 2 and Suuji D radars have been observed at Qingcheng since as early as [redacted] On imagery of [redacted] two TREE FORK 2 and two Suuji D radars were observed (Figure 23). On imagery of [redacted] one Suuji D and one TREE FORK 2 were paired in area A (Figure 24), and one Suuji D and one TREE FORK 2 were paired in area B (Figure 25). 25X1 25X1 25X1

25X1

26. (TSR) To date, no HF communications facility has been identified within 9 nm of the radar site. However, the communications could be transmitted via landline to a remote communications center and then transmitted to Beijing via HF communications.

27. (TSR) Shuanghezhen AW Radar Facility is 1.6 nm north-northwest of the village of Shuanghezhen. The terrain is flat or relatively level for at least 0.5 nm around the site with an elevation of 500 feet.

28. (TSR) The TREE FORK 2 and Suuji D radars have been seen at this facility since as early as [redacted] [redacted] two TREE FORK 2, one Suuji D, and one TREE FORK 2 Suuji D radar (folded down) were observed (Figures 26, 27, and 28). When imaged on [redacted], one TREE FORK 2, one Suuji D, one probable TREE FORK 2, and one probable TREE FORK 2 Suuji D were present. 25X1 25X1 25X1

25X1

[redacted] 25X1

Sanitized Copy Approved for Release 2010/05/27 : CIA-RDP80T00556A000100270001-6

25X1
Sanitized Copy Approved for Release 2010/05/27 : CIA-RDP80T00556A000100270001-6

Page Denied

Next 3 Page(s) In Document Denied

Sanitized Copy Approved for Release 2010/05/27 : CIA-RDP80T00556A000100270001-6

Sanitized Copy Approved for Release 2010/05/27 : CIA-RDP80T00556A000100270001-6

25X1

25X1

25X1

3). (TSR) No HF communications facility has been identified within 9 nm of Shuanghezhen.

3 . (TSR) Huinan AW Radar Facility (Chaoyang) is 2.2 nm southeast of the village of Huinan. TREE FORK 2/Suuji D radars have been seen at this facility since as early as September 1975, and currently three TREE FORK 2/Suuji D and one Suuji D are present (Figure 29). The terrain is flat or relatively level for at least 0.5 nm around the site with an elevation of 985 feet.

33. (TSR) No HF communications facility has been identified within 9 nm of the radar site.

34. The Xuanhua Phased-Array Radar Facility is 67 nm northwest of Beijing and 9.5 nm south-southeast of the city of Xuanhua. The radar was built into the side of a 5,000-foot mountain at an elevation of approximately 4,000 feet (Figure 30). The radar face is inclined against the mountainside at a 35-degree angle and is boresighted at 315 degrees. It

25X1

25X1

25X1

25X1

25X1

RCA-03/0004/79

Sanitized Copy Approved for Release 2010/05/27 : CIA-RDP80T00556A000100270001-6

Sanitized Copy Approved for Release 2010/05/27 : CIA-RDP80T00556A000100270001-6

25X1
25X1

REFERENCES

IMAGERY

(TSR) All pertinent KEYHOLE imagery acquired from [redacted] ([redacted]) was used in the preparation of this report. 25X1 25X1

MAPS OR CHARTS

ACIC, US Air Target Chart, Series 200, Various sheets, scale 1:200,000 (UNCLASSIFIED)

DOCUMENTS

1. DIA, [redacted] *EW/GCI/HF Radar - PRC (U)*, Feb 77 (TOP SECRET [redacted] 25X1 25X1
2. NSA, 3/00/14941-79, *PRC BMEWS Simulated Tracking Exercises*, 172355Z, Apr 79 (TOP SECRET [redacted] 25X1
3. NSA, 3/00/7952-77, *Recent Developments in the Chinese BMEWS*, 0719382, Mar 77 (TOP SECRET [redacted] 25X1 25X1
4. NSA, [redacted] *NSA Memorandum: PRC BMEWS Radar Performance and Method of Operation*, Aug 77 (TOP SECRET [redacted] 25X1 25X1
5. NPIC, [redacted] RCA-24/0003/76, *SUJI E Radar*, Aug 75 (TOP SECRET [redacted] 25X1 25X1
6. NSA, 3/00/10851-79, *Collocation of PRC BMEWS and ASV Radar Facilities*, 221702Z, Mar 79 (TOP SECRET [redacted] 25X1
7. NSA, 3/00/1142-78, *Evaluation of Chinese BMEWS Tracking: Aug 76 to Aug 77*, Jan 78 (TOP SECRET [redacted] 25X1
8. CIA, [redacted] *S&T Intelligence Report: A Preliminary Evaluation of the Phased-Array Radar at Hsuan-hua, PRC*, Jan 76 (TOP SECRET [redacted] 25X1 25X1
9. NSA, K/00/4434-78, *PRC Hsuan-hua Phased-Array Radar Active on 5 May*, 819382, May 78 (TOP SECRET [redacted] 25X1
10. NSA, K/00/394-79, *People's Republic of China BMEWS Phased-Array Radar Active for Spring Test Cycle*, 211851Z, May 79 (TOP SECRET [redacted] 25X1

REQUIREMENT

COMIREX C01
Project 290017DC

(S) Comments and queries regarding this report are welcome. They may be directed to [redacted] Asian Forces Division, Imagery Exploitation Group, NPIC, [redacted] 25X1 25X1

(S) The author wishes to acknowledge the extensive contribution made to this report by [redacted] B-33 of NSA 25X1

25X1

RCA-03/0004/79

Sanitized Copy Approved for Release 2010/05/27 : CIA-RDP80T00556A000100270001-6

Sanitized Copy Approved for Release 2010/05/27 : CIA-RDP80T00556A000100270001-6

Top Secret

Top Secret

Sanitized Copy Approved for Release 2010/05/27 : CIA-RDP80T00556A000100270001-6