Approved For Release 2007/09/21 : CIA-RDP81-00120R000100050011-0

Feb. 13, 1962 D. C. DAVIS ET AL 3,021,523

SYSTEM FOR COUNTERMEASURES

Filed Sept. 19, 1956 6 Sheets-Sheet 1

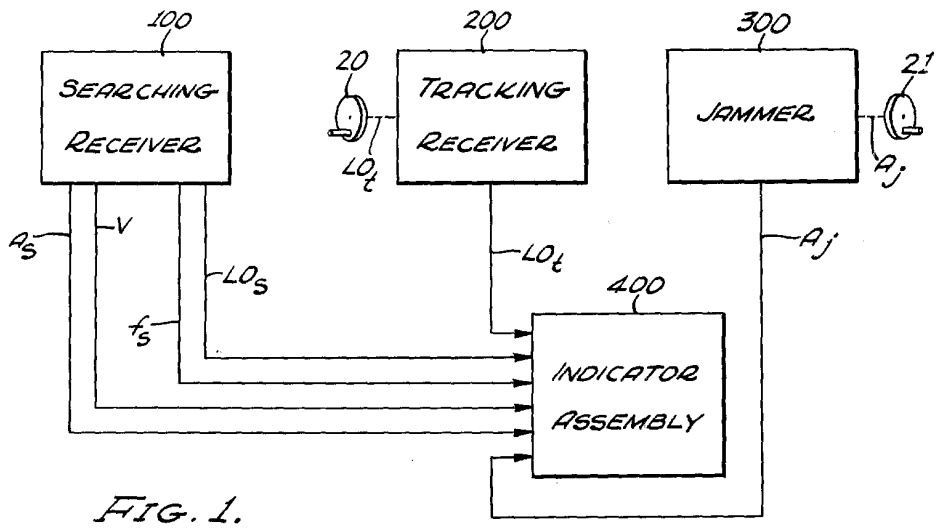

FIG. 1.

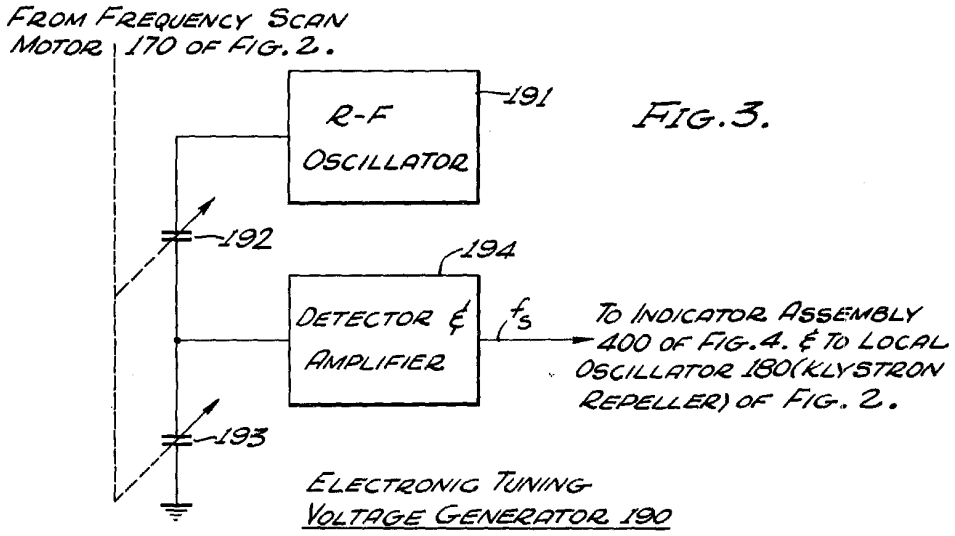

FIG. 3.

INVENTORS
DONOVAN C. DAVIS,
PAUL M. BROWN,
BY
ATTORNEY

Approved For Release 2007/09/21 : CIA-RDP81-00120R000100050011-0

Approved For Release 2007/09/21 : CIA-RDP81-00120R000100050011-0

Feb. 13, 1962 D. C. DAVIS ET AL 3,021,523

SYSTEM FOR COUNTERMEASURES

Filed Sept. 19, 1956 6 Sheets-Sheet 2

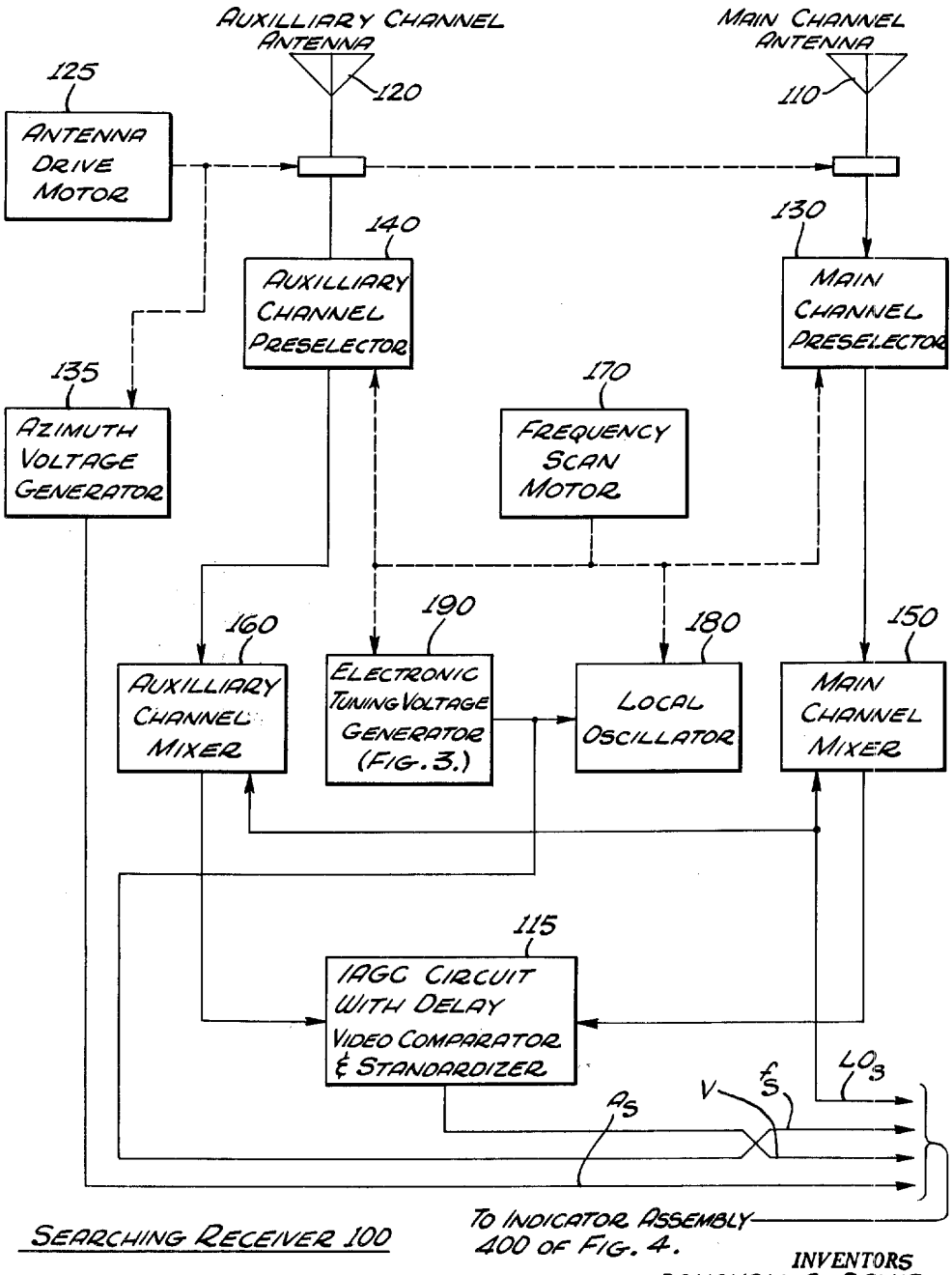

INVENTORS
DONOVAN C. DAVIS,
PAUL M. BROWN,
BY
ATTORNEY

FIG. 2.

Approved For Release 2007/09/21 : CIA-RDP81-00120R000100050011-0

Approved For Release 2007/09/21 : CIA-RDP81-00120R000100050011-0

Feb. 13, 1962 D. C. DAVIS ET AL 3,021,523

SYSTEM FOR COUNTERMEASURES

Filed Sept. 19, 1956 6 Sheets-Sheet 3

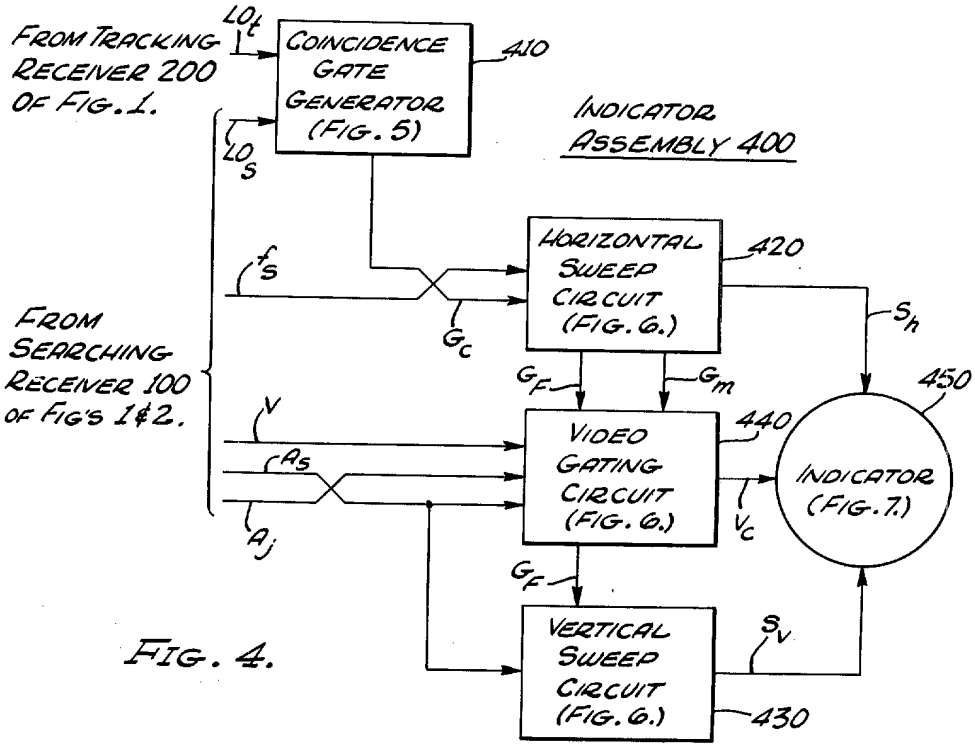

FIG. 4.

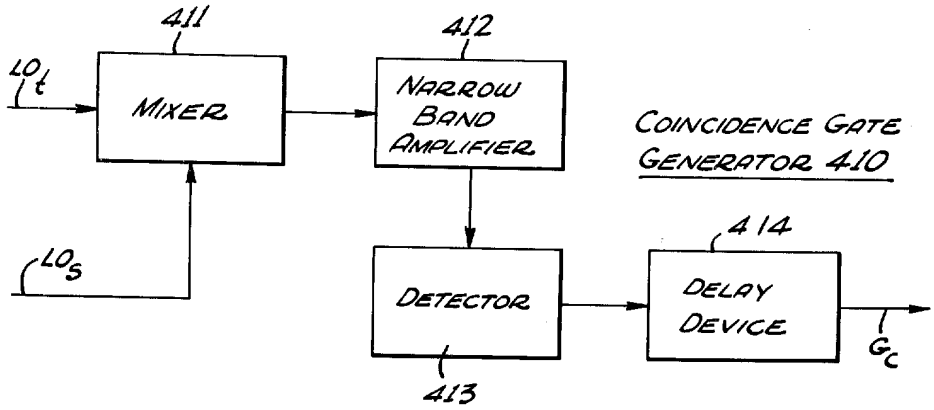

FIG. 5.

INVENTORS
DONOVAN C. DAVIS,
PAUL M. BROWN,
BY
ATTORNEY

Approved For Release 2007/09/21 : CIA-RDP81-00120R000100050011-0

Approved For Release 2007/09/21 : CIA-RDP81-00120R000100050011-0

Feb. 13, 1962 D. C. DAVIS ET AL 3,021,523

SYSTEM FOR COUNTERMEASURES

Filed Sept. 19, 1956 6 Sheets-Sheet 4

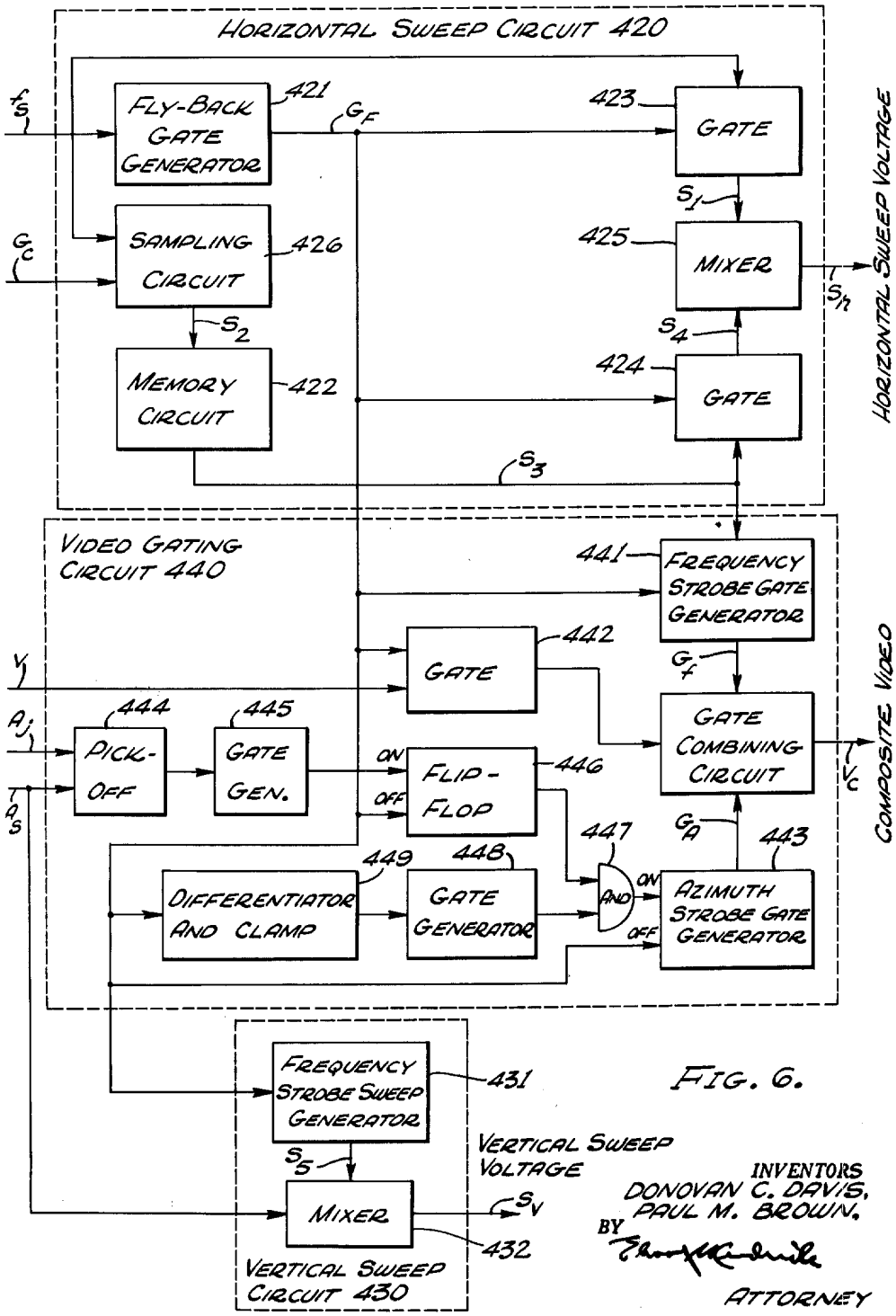

FIG. 6.

INVENTORS
DONOVAN C. DAVIS,
PAUL M. BROWN,
BY
ATTORNEY

Approved For Release 2007/09/21 : CIA-RDP81-00120R000100050011-0

Approved For Release 2007/09/21 : CIA-RDP81-00120R000100050011-0

Feb. 13, 1962 D. C. DAVIS ET AL 3,021,523

SYSTEM FOR COUNTERMEASURES

Filed Sept. 19, 1956 6 Sheets-Sheet 5

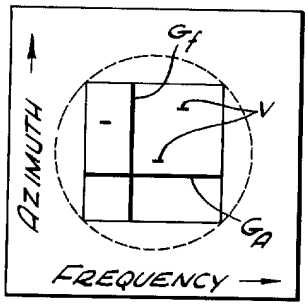

FIG. 7.

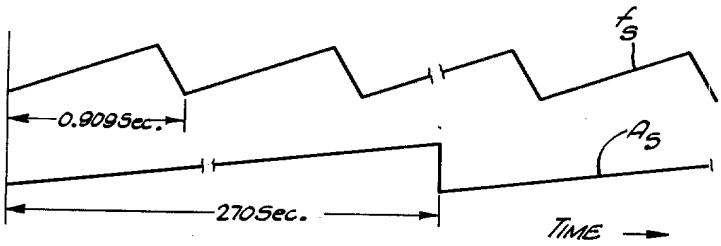

FIG. 8.

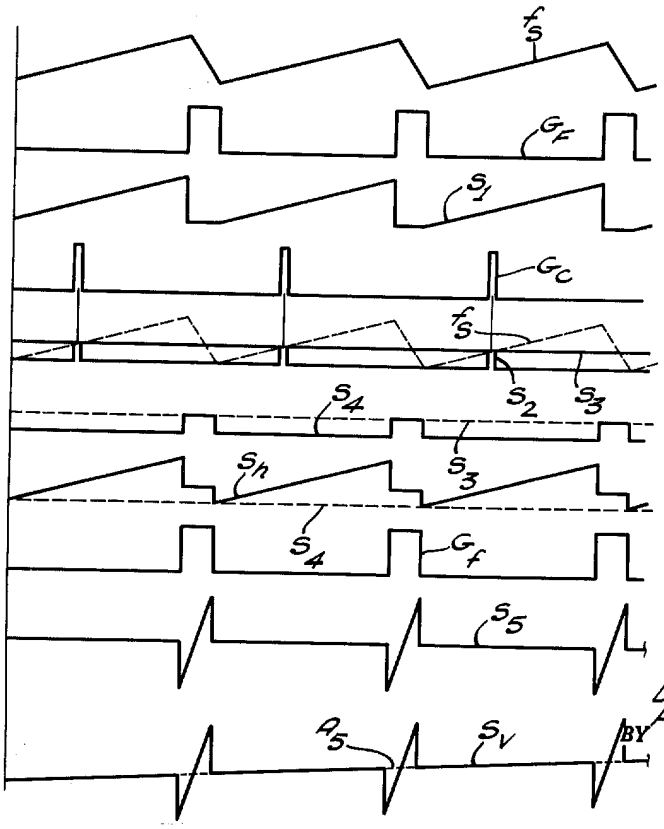

FIG. 9.

INVENTORS
DONOVAN C. DAVIS,
PAUL M. BROWN,
BY
ATTORNEY

Approved For Release 2007/09/21 : CIA-RDP81-00120R000100050011-0

Approved For Release 2007/09/21 : CIA-RDP81-00120R000100050011-0

Feb. 13, 1962 D. C. DAVIS ET AL 3,021,523
SYSTEM FOR COUNTERMEASURES
Filed Sept. 19, 1956 6 Sheets-Sheet 6

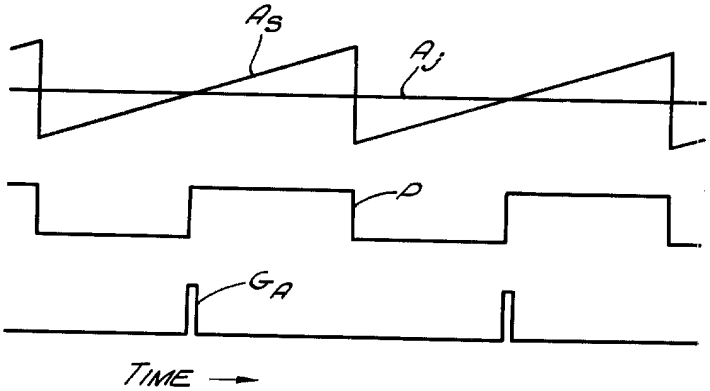

FIG. 10.

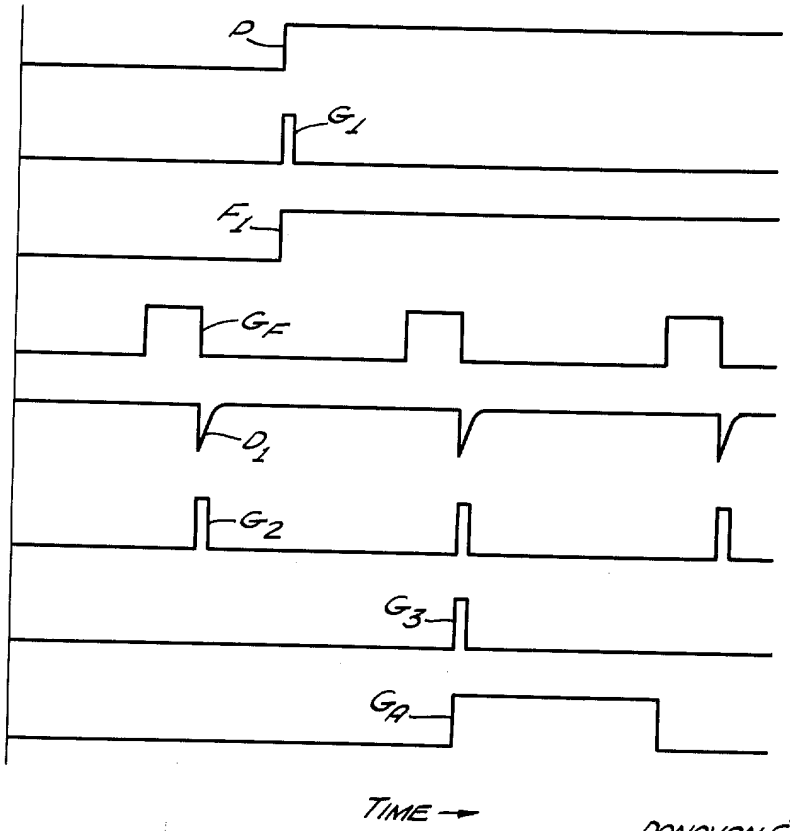

FIG. 11.

INVENTORS
DONOVAN C. DAVIS,
PAUL M. BROWN,
BY
ATTORNEY

Approved For Release 2007/09/21 : CIA-RDP81-00120R000100050011-0

Approved For Release 2007/09/21 : CIA-RDP81-00120R000100050011-0

United States Patent Office

3,021,523

Patented Feb. 13, 1962

1

3,021,523
SYSTEM FOR COUNTERMEASURES

Donovan C. Davis, Pasadena, and Paul M. Brown, East Whittier, Calif., assignors to Gilfillan Bros., Inc., Los Angeles, Calif., a corporation of California

Filed Sept. 19, 1956, Ser. No. 611,809
4 Claims. (Cl. 343—18)

This invention relates to countermeasures indication systems, and more particularly to means for simultaneously displaying indicia representing the frequency to which a friendly tracking receiver is tuned, the direction of radiation of a friendly jammer, and the angular position and transmission frequency of an enemy source of radiant energy.

In manual frequency and position tracking systems often used with countermeasures receivers, it is necessary to display visually the position and transmission frequency of each enemy radar operating within an assigned surveillance volume in order that a system monitor or operator may quickly determine the presence of any enemy radar and jam it. It is also well known that the transmission frequency and angular position of the enemy radar must be registered in order that an associated directional jammer antenna may be appropriately positioned and a jammer transmitter may be suitably tuned to effect efficient jamming of the enemy radar. In order to track the position and frequency of an enemy radar transmitter manually, it is also necessary to display the transmission frequency and antenna position of the jammer simultaneously with the position and frequency data of enemy radars.

The present invention provides a solution to this problem in a system for countermeasures including a searching receiver having means for producing first and second output signals with amplitudes, respectively, changing in proportion to the angular position of a searching receiver directional antenna and the frequency to which the searching receiver is tuned, one of the searching receiver output signals having a period short in comparison to that of the other, the system including at least a tracking receiver having an output signal representative of the frequency to which the tracking receiver is tuned and a jammer having an output signal representative of the angular position of its directional antenna. The indication system of the invention is preferably employed with a cathode-ray type indicator having an evacuated envelope and an electron gun at one end of the envelope, a luminescent screen at the other end of the envelope, and first and second deflection means for deflecting the cathode-ray across the luminescent screen in two different directions, e.g. vertically and horizontally.

In accordance with the invention the arrangement for deflecting the cathode-ray of the indicator comprises means for generating a fly-back gate approximately at the end of at least one period of the searching receiver output signal, means for producing a sample signal proportional to the amplitude of the said one output signal at a time during the one period that the amplitude of the one searching receiver output signal is proportional to the magnitude of a corresponding one of the tracking receiver and jammer output signals, means for storing the second signal until the fly-back gate is generated, means for applying only the one searching receiver output signal to the first cathode-ray deflection means between the times that the fly-back gate is generated and for applying only the stored sample signal to the first deflection means only during the time that the fly-back gate is generated, means for generating a sweep voltage having a period substantially equal to that of the fly-back gate, means for applying the sweep voltage to the second deflection means, the sweep voltage having a range sufficiently large to sweep

2

the cathode-ray of the indicator over a substantial portion of the luminescent screen, means for additionally applying the other searching receiver output signal to the second deflection means, and means for gating the cathode-ray of the indicator on only when the searching receiver receives input signals, when the fly-back gate is generated, and when the amplitude of the other searching receiver output signal becomes proportional to the magnitude of the other of the corresponding tracking receiver and jammer output signals.

In accordance with the invention preferably the second output signal of the searching receiver is employed to represent the frequency to which it is tuned. This signal preferably has a periodic nature, the period of which is short in comparison to the period of the first output signal, which, then, is employed to represent the angular position of the searching receiver antenna. Preferably the means for producing the sample signal includes means to produce a coincidence gate to sample the second output signal of the searching receiver at the time it is generated. This coincidence gate is generated with local oscillators of both the searching receiver and jammer when the frequencies of each are within the same relatively narrow frequency band.

According to a feature of the invention, the local oscillator coincidence gate is generated by means including a mixer for combining the local oscillator signals from both the searching receiver and the jammer, and a network connected from the mixer having a relatively narrow pass band to produce a relatively high amplitude output signal when the frequency of the searching receiver is nearly equal to that of the tracker local oscillator. In this case, the searching receiver may be employed to search for enemy radar both in frequency and in direction. Hence, the tracker local oscillator frequency will be relatively constant and the searching receiver local oscillator frequency will be varying, for example, increasing or decreasing linearly within a predetermined range.

It is therefore an object of the invention to provide means for displaying indicia representing the frequency of a friendly tracking receiver and the direction of radiation of a friendly jammer with indicia representing the angular position and transmission frequency of an enemy radar transmitter.

It is another object of the invention to provide an arrangement for deflecting the cathode-ray of an indicator across a luminescent screen incorporated in the indicator in a manner to display indicia representing the frequency and position of an enemy radar transmitter as a function of its position, to generate a strobe line representing the frequency to which a friendly tracking receiver is tuned, and to generate a strobe line representative of the angular position of a friendly jammer.

It is still another object of the invention to provide means to generate a gating signal when the frequency of a variable frequency alternating signal becomes substantially equal to that of a substantially fixed frequency alternating signal.

The novel features which are believed to be characteristic of the invention, both as to its organization and method of operation, together with further objects and advantages thereof, will be better understood from the following description considered in connection with the accompanying drawings. It is to be expressly understood, however, that the drawings are for the purpose of illustration and description only and are not intended as a definition of the limits of the invention.

FIG. 1 is a block diagram of a system for countermeasures including an indicator assembly constructed in accordance with the present invention;

Approved For Release 2007/09/21 : CIA-RDP81-00120R000100050011-0

Approved For Release 2007/09/21 : CIA-RDP81-00120R000100050011-0

FIG. 2 is a more detailed block diagram of a searching receiver shown in FIG. 1;

FIG. 3 is a still more detailed schematic diagram of an electronic tuning voltage generator shown in FIG. 2;

FIG. 4 is a detailed block diagram of an indicator assembly shown in FIG. 1;

FIG. 5 is a detailed schematic diagram of a coincidence gate generator shown in FIG. 4;

FIG. 6 is a detailed block diagram of the video gating and sweep circuits shown with an indicator in FIG. 4;

FIG. 7 is a view showing the display produced by the indicator of FIG. 4; and

FIGS. 8, 9, 10 and 11 are graphs of waveforms characteristic of the operation of the indicator assembly shown in FIG. 4.

In the drawings in FIG. 1 a searching receiver **100** with a tracking receiver **200** and a jammer **300** are shown providing several inputs to an indicator assembly **400** for a system for countermeasures including the searching and tracking receivers **100** and **200**, the jammer **300** and the indicator assembly **400**. Preferably the searching receiver **100** produces the output signals displayed in the indicator assembly **400** so that the local oscillator frequency designated LO_t may be manually adjusted by means of a handwheel **20** to initiate automatic frequency control in the tracking receiver **200** and to heterodyne down the transmitter frequency of an enemy radar to a frequency within the intermediate frequency pass band of the tracking receiver intermediate frequency amplifiers. A similar handwheel **21** is provided with the jammer **300** to adjust the angular position of the jammer antenna (not shown). The jammer antenna is, of course, preferably directional. The jammer however may be employed to jam all radio frequency signals within a relatively large band. Tracking receiver **200** is provided with the output signal LO_t which is the output of the tracking receiver local oscillator. The jammer **300** provides an output signal A_j which is representative of the angular position of the jammer directional antenna. Both the signals LO_t and A_j are impressed upon the indicator assembly **400**.

Searching receiver **100** produces four other signals which are also impressed upon the indicator assembly **400**. These signals are local oscillator signal LO_s, a signal representative of the frequency of LO_s or f_s, signals representative of the video received by the searching receiver **100** and designated generally as V, and a signal representative of the angular position of a directional antenna included in the searching receiver **100**. The signal representative of the angular position of the searching receiver directional antenna is generally designated A_s.

The searching receiver **100** is shown in FIG. 2 comprising main and auxiliary channel antennas **110** and **120**, main and auxiliary channel perselectors **130** and **140**, and main and auxiliary channel mixers **150** and **160**. The auxiliary channel antenna is employed to reduce all signals received through the main channel antenna **110** to substantially zero unless they are received through the main lobe of the main channel antenna **110** which is directional. Searching receiver **100** is tuned by means of a frequency scan motor **170** which is mechanically connected to the main and auxiliary channel preselectors **130** and **140** and to a local oscillator **180** and an electronic tuning voltage generator **190**.

The local oscillator **180** may be a klystron type local oscillator with the electronic tuning voltage generator **190** producing an output voltage which is applied to the repeller of the klystron local oscillator **180**. This voltage is representative of the output frequency of the local oscillator **180**. Side lobe video of the main channel antenna **110** is cancelled in an IAGC circuit which incorporates a delay, a video comparator and a standardizer indicated generally at **115**. The outputs of main and auxiliary channel mixers **150** and **160** are thus combined in this IAGC circuit **115**.

Preferably auxiliary channel antenna **120** is not omnidirectional. For this reason it is preferably driven synchronously in azimuth with main channel antenna **110** by an antenna drive motor **125**. The antenna drive motor **125** also drives an azimuth voltage generator **135** which may simply be a potentiometer having an output proportional to the angular positions of the main and auxiliary channel antennas **110** and **120**. Searching receiver **100** is described in greater detail in copending application Serial No. 596,131 filed July 2, 1956, entitled "Radiant Energy Receiver System" filed by Donovan C. Davis and Paul M. Brown, now Patent No. 2,938,206, issued May 24, 1960.

The output of searching receiver **100** thus is the output of local oscillator **180** or LO_s, the output of electronic tuning voltage generator **190** or f_t, the video output of the IAGC circuit **115** or V, and the output of azimuth voltage generator **135** or A_s.

The electronic tuning voltage generator **190** may be conventional as shown in FIG. 3 including an RF oscillator **191**, a pair of variable tuning capacitors **192** and **193** mechanically connected from the frequency scan motor **170** and a detector amplifier **194** connected from the mutual junctions of the capacitors **192** and **193**. Preferably the electronic tuning voltage generator **190** is constructed as shown in FIG. 3 because of the unusually high rate of change of the signal f_s required of the electronic tuning voltage generator **190**.

Indicaor assembly **400** is shown in FIG. 4 comprising a coincidence gate generator **410**, a horizontal sweep circuit **420**, a vertical sweep circuit **430**, a video gating circuit **440**, and an indicator **450**.

Coincidence gate generator **410** is employed to generate a coincidence gate G_c when the signal LO_s is produced by local oscillator **180** shown in FIG. 2 and is substantially equal to that of the signal LO_t produced by the local oscillator in the tracking receiver **200** shown in FIG. 1. The coincidence gate G_c with the frequency representative signal f_s produced by the electronic tuning voltage generator **190** shown in FIG. 2 is impressed upon the horizontal sweep circuit **420** to produce a special type of horizontal sweep voltage to sweep the cathode-ray of the indicator **450** in a particular manner. The waveform of the horizontal sweep voltage indicated generally as F_h will be hereinafter discussed more fully with the particular component parts of the horizontal sweep circuit **420**. In accordance with the invention, use is made of a particular combination of conventional circuits to produce the coincidence gate G_c in the coincidence gate generator **410**.

Preferably the signal f_s is substantially sawtooth in shape. During the fly-back time of the signal f_s preferably a fly-back gate G_F is generated in the horizontal sweep circuit which is utilized therein and also in both the vertical sweep circuit **430** and the video gating circuit **440**. The video gating circuit **440** impresses all video which is preferably standardized to intensity modulate the cathode-ray of the indicator **450**. Video gating circuit **440** is responsive to the fly-back gate G_F and also a gate G_M which is employed to generate a standardized frequency strobe gate in the video gating circuit **440**. The video gating circuit is also responsive to the video output V of the searching receiver **100**, the angle antenna position signals A_s of the searching receiver **100**, and the antenna position signal A_j of the jammer **300** shown in FIG. 1.

The output of the video gating circuit **440** is labeled V_c and represents the composite video of the video V and all the display gates generated within the video gating circuit **440**. The composite video V_c is thus employed to intensity modulate the cathode-ray indicator **450**. The vertical sweep circuit produces a vertical sweep voltage S_v, the waveform of which will be described in detail

Approved For Release 2007/09/21 : CIA-RDP81-00120R000100050011-0

Approved For Release 2007/09/21 : CIA-RDP81-00120R000100050011-0

hereinafter. The vertical sweep circuit comprises several conventional component parts which will also be described in detail hereinafter. The vertical sweep circuit produces the vertical sweep voltage S_v in response to reception of the searching receiver antenna angular position A_s and the fly-back gate G_s produced by a fly-back gate generator, not shown in FIG. 4, incorporated in the horizontal sweep circuit **420**.

The coincidence gate generator **410** is shown in FIG. 5 comprising a mixer **411** responsive to the tracking receiver local oscillator LO_t and the searching receiver local oscillator receiver LO_s. The output of the mixer **411** is introduced to a narrow band network or amplifier **412**, the output of which is passed through a detector **413** and a delay device **414** to compensate for the delay produced in the IAGC circuit **115** shown in the searching receiver **100** in FIG. 2. The output of the delay device thus is the coincidence gate G_c. The operation of the coincidence gate generator **410** may be explained in analogy to a pair of apertured plates having a light beam trained on one aperture of a stationary plate. As the aperture of the other and movable plate passes over the aperture of the fixed plate, the light beam may shine through. Thus the narrow band amplifier **412** provides a gated output as the local oscillator signal LO_s increases to the frequency of the tracking receiver local oscillator signal LO_t and passes it. That is, when the difference between the frequencies of the signals LO_s and LO_t is approximately equal to the band width of the narrow band amplifier **412**, a square wave or gate output is produced by the narrow band amplifier **412**.

The horizontal and vertical sweep circuits **420** and **430** are shown with a video gating circuit **440** in FIG. 6. The horizontal sweep circuit **420** comprises a fly-back gate generator **421** for producing the fly-back gate G_F. The fly-back gate G_F is employed to pass the frequency representative signal F_s and the output S_3 of a memory circuit **422** alternately through a pair of corresponding gates **423** and **424**, respectively. The outputs of the gates **423** and **424**, respectively, are indicated as S_1 and S_4. The outputs S_1 and S_4 are impressed upon a mixer **425**, the output of which is the horizontal sweep voltage S_h. The coincidence gate G_c is impressed upon a sampling circuit **426** on which the frequency representative signal F_s is also impressed. Sampling circuit **426** samples the output signal amplitude of the frequency representative signal F_s whenever the coincidence gate G_c is generated. This sample signal is represented at the output of sampling circuit **426** by S_2 which is impressed upon memory circuit **422**. Memory circuit **422** supplies amplitude memory for the signal S_2 which is presented as the horizontal sweep voltage S_h through gate **424** and mixer **425** whenever the fly-back gate G_F is generated. The frequency representative signal F_s is passed normally through gate **423** and mixer **425** normally only when the fly-back gate G_F is not generated.

The signal S_3 which corresponds to G_n shown in FIG. 4 is impressed upon a frequency strobe gate generator **441** in the video gating circuit **440** with the fly-back gate G_F. The frequency strobe gate generator **411** is then employed to generate a standard gate G_f whenever the fly-back gate G_F is generated and when signal S_3 is greater than zero. Video gating circuit **440** is also provided with a blanking gate **442** which is employed to blank out the searching receiver video V from the composite video V_c whenever the fly-back gate G_F is generated, the fly-back gate G_F being impressed upon gate **422** with the searching receiver video V. An azimuth strobe gate generator **443** is employed to produce an azimuth strobe gate G_A at a time during which the gate **423** in the horizontal sweep circuit **420** is open, i.e. when fly-back gate G_F is not generated. A pick-off pulse is generated by pick-off **444** as the changing, for example, according to a sawtooth waveform of the signal A_s to the substantially constant signal level of the jammer antenna azimuth position A_j. Each pulse from the pick-off **444** is then standardized into a gate by gate generator **445** which is employed to operate a flip-flop **446**. The output of the flip-flop is then impressed upon and gate **447** which produces an output pulse on azimuth strobe gate generator **443** when an output pulse is received from a gate generator **448** having an input from a differentiator and positive clamp **449** responsive to the fly-back gate G_F. Both the flip-flop **446** and the azimuth strobe gate generator **443** are preferably bistable multivibrators, each of which are turned off by the fly-back gate G_F. The gating arrangement for the azimuth strobe gate generator **443** is preferably provided so that the display gate G_A will be presented during a sweep of the frequency representative signal F_s immediately following the time that the azimuth representative signal A_s becomes equal to the other azimuth representative signal A_j.

The vertical sweep voltage S_v produced by the vertical sweep circuit **430** is produced simply by means of a combination of the searching receiver antenna azimuth position signal A_s and the output S_5 of the frequency strobe sweep generator **431**, both the signal S_5 and A_s being impressed upon a mixer **432** which produces the vertical sweep voltage S_v as a combination of the signals S_5 and A_s. The frequency strobe sweep generator is employed to sweep the cathode-ray of the indicator **450** shown in FIG. 4 in a vertical direction across the luminescent screen of the tube, not shown in FIG. 4.

The display of the indicator **450** is shown in FIG. 7 where the searching receiver video V is displayed in the form indicated as V, a frequency strobe line is indicated as G_F and an azimuth strobe line is indicated as G_A. The horizontal position of the frequency strobe line G_F is representative of the frequency of a tracking receiver **200** shown in FIG. 1. The vertical position of the azimuth strobe line G_A is representative of the angular position of the antenna of the jammer **300** shown in FIG. 1. Each of the illuminated portions V is representative of both the azimuth and frequency of an enemy radar transmitter. Preferably the length of the lines V shown in FIG. 7 are substantially equal, they being standardized in a video standardizer in the IAGC circuit **115** shown in the searching receiver **100** in FIG. 2. The output signal LO_t of the tracking receiver **200** is a substantially constant amplitude and frequency radio frequency signal, the frequency of which is variable only with the handwheel **20** shown in FIG. 1. The searching receiver local oscillator signal LO_s is preferably a linear frequency varying radio frequency signal, and the azimuth output A_j of the jammer antenna is preferably simply a substantially constant direct current signal, variable only with the handwheel **21** shown in FIG. 1. The coincidence gate G_c is generated, as explained previously, when the frequencies of the signals LO_s becomes approximately equal to that of the signal LO_t. The waveforms of the signals S_s and A_s are shown in FIG. 8. It is to be noted that the frequency representative signal of the frequency of the searching receiver local oscillator is substantially short in comparison of the period of the azimuth representative signal A_s. For example, the period of the frequency representative signal may be 0.909 second whereas the period of the azimuth representative signal A_s may be 270 seconds.

The waveform of the fly-back gate G_F in its relative position with respect to the frequency representative signal F_s is shown in FIG. 9. The output of gate **423** is also shown as S_1 directly below the fly-back gate G_F. G_c may be generated at any particular time during the rise time of the signal S_1 or F_s. The gate G_c however, is generated at the time that the searching receiver local oscillator signal LO_s is approximately equal in frequency to the tracking receiver local oscillator signal LO_t. The coincidence gate G_2 is employed to sample the frequency representative signal F_s when the coincidence gate G_c is generated. The output of sampling circuit **426** is indi-

Approved For Release 2007/09/21 : CIA-RDP81-00120R000100050011-0

Approved For Release 2007/09/21 : CIA-RDP81-00120R000100050011-0

cated as S_2 in FIG. 9 directly below the waveform of the coincidence gate G_c. Memory circuit **422** shown in the horizontal sweep circuit **420** in FIG. 6 then produces an output signal having a substantially constant level S_3 unless the local oscillator frequency LO_t of the tracking receiver **200** shown in FIG. 1 is changed by moving the handwheel **20**. This level is indicated also in FIG. 9 directly below the coincidence gate G_c with the frequency representative signal F_s indicated in dotted lines over the output signal S_3 of the memory circuit **422**. The signal S_3 is indicated in dotted lines below the output gate S_2 of sampling circuit **426** in FIG. 9 with the output of gate **424** or S_4 being indicated in a solid line.

The manner in which mixer **425** mixes the output signals S_1 and S_4 of gates **423** and **424** respectively, is shown in FIG. 9 directly below the representation of the signal S_4 in a solid line. The signal S_4 is represented in dotted line below that with the output of mixer **425** or S_h being indicated in a solid line. The display gate G_f of frequency strobe gate generator **441** is shown directly below the horizontal sweep voltage S_h. The output of frequency strobe gate generator **431** or S_5 is shown. The manner in which the signals A_s and S_5 are combined is illustrated at S_v directly below the signal S_5 in FIG. 9.

The azimuth representative signals A_s and A_j are shown together in FIG. 10. At the point where A_s becomes equal to A_j, a pick-off gate indicated at P below the waveforms of A_s and A_j is generated. This is standardized by the gate generator **445**, the flip-flop **446**, and gate **447**, differentiator and clamp **449**, gate generator **448** and azimuth strobe gate generator **443** to produce an azimuth strobe display gate G_A as shown in FIG. 10. The specific manner in which the strobe display gate G_A is generated is better illustrated in the waveform shown in FIG. 11. In this figure the output of the pick-off P is illustrated above a gate G_1 generated by gate generator **445** in response to the output P of the pick-off **444**. Flip-flop **446** is turned on a time illustrated by the gate F_1. The fly-back gate G_F may be generated regularly in the manner shown below the gate F_1. The output of differentiator and positive clamp **449** is illustrated below the fly-back gate G_F at D_1. The output of gate generator **448** in response to the output signal D_1 of differentiator and clamp **449** is shown below the waveform D_1. The output of and gate **447** is then illustrated at G_3 below the gates G_2, and the output of azimuth strobe gate generator **443** or G_A is illustrated below the gate G_3. It is to be noted that the gate G_A is generated after the gate G_1 is generated but only during a period between the times that the fly-back gate G_F is generated.

It is to be noted that many changes and modifications of the invention will suggest themselves to those skilled in the art. The true scope of the invention, however, is of course not to be limited to the specific embodiments of the invention shown in the drawings, since the true scope of the invention is defined only in the appended claims.

What is claimed is:

1. In a system for countermeasures including a searching receiver having a directional antenna and means for producing first and second output signals with amplitudes respectively changing in proportion to the angular position of the searching receiver directional antenna and the frequency to which the searching receiver is tuned, one of said searching receiver output signals having a period short in comparison to that of the other, said system including at least a tracking receiver having an output signal representative of the frequency to which the tracking receiver is tuned and a jammer transmitter having a directional antenna and an output signal representative of the angular position of the jammer transmitter directional antenna, said system also including a cathode-ray type indicator having an evacuated envelope, an electron gun at one end of the envelope, a luminescent screen at the other end of the envelope, and first and second deflection means for deflecting the cathode-ray across the luminescent screen in two different directions, an arrangement for deflecting the cathode-ray of said indicator across the luminescent screen thereof in a manner to display indicia representative of the frequency and the position of an enemy source of radiant energy, to generate a strobe line representing the frequency to which the tracking receiver is tuned, and to generate a strobe line representing the angular position of the jammer transmitter directional antenna, said arrangement comprising: means for generating a fly-back gate approximately at the end of at least one period of said one searching receiver output signal, means for producing a sample signal proportional to the amplitude of said one searching receiver output signal at a time during said one period when the amplitude of said one searching receiver output signal is proportional to the magnitude of a corresponding one of said tracking receiver and jammer transmitter output signals, means for storing said sample signal until said fly-back gate is generated, means for applying only said one searching receiver output signal to said first cathode-ray deflection means between the times that said fly-back gate is generated and for applying only said stored sample signal to said first deflection means only during the time that said fly-back gate is generated, means for generating a sweep voltage having a period substantially equal to that of said fly-back gate, means for applying said sweep voltage to said second deflection means, said sweep voltage having a range sufficiently large to sweep the cathode-ray of said indicator over a substantial portion of the luminescent screen, means for additionally applying said other searching receiver output signal to said second deflection means, and means for gating the cathode-ray of said indicator on only when said searching receiver receives input signals, when said fly-back gate is generated, and when the amplitude of said other searching receiver output signal becomes proportional to the magnitude of the other of said corresponding tracking receiver and jammer transmitter output signals.

2. In a system for countermeasures including a searching receiver having a directional antenna and means for producing video signals, first and second output signals with amplitudes respectively changing in proportion to the angular position of the searching receiver directional antenna and the frequency to which the searching receiver is tuned, one of said searching receiver output signals having a period short in comparison to that of the other, said system including at least a tracking receiver having an output signal representative of the frequency to which the tracking receiver is tuned and a jammer transmitter having a directional antenna and an output signal representative of the angular position of said tracking jammer directional antenna, said system also including a cathode-ray type indicator having an evacuated envelope, an electron gun at one end of the envelope, a luminescent screen at the other end of the envelope, and first and second deflection means for deflecting the cathode-ray across the luminescent screen in two different directions, an arrangement for deflecting the cathode-ray of said indicator across the luminescent screen thereof in a manner to display indicia representative ofthe frequency and the position of an enemy source of radiant energy, to generate a strobe line representing the frequency to which the tracking receiver is tuned, and to generate a strobe line representing the angular position of the jammer transmitter directional antenna, said arrangement comprising: means for generating a fly-back gate approximately at the end of at least one period of said one searching receiver output signal, means for producing a sample signal proportional to the amplitude of said one searching receiver output signal at a time during said one period when said one searching receiver output signal is proportional to the magnitude of a corresponding one of said tracking receiver and jammer transmitter output signals, means for storing said sample signal until said

Approved For Release 2007/09/21 : CIA-RDP81-00120R000100050011-0

Approved For Release 2007/09/21 : CIA-RDP81-00120R000100050011-0

fly-back gate is generated, means for applying only said one searching receiver output signal to said first cathode-ray deflection means between the times that said fly-back gate is generated and for applying only said stored sample signal to said first deflection means only during the time that said fly-back gate is generated, means for generating a sweep voltage having a period substantially equal to that of said fly-back gate, means for applying said sweep voltage to said second deflection means, said sweep voltage having a range sufficiently large to sweep the cathode-ray of said indicator over a substantial portion of the luminescent screen, means for additionally applying said other searching receiver output signal to said second deflection means, a gate combining circuit to gate the cathode-ray of said indicator off and on, means for impressing said fly-back gate on said gate combining circuit, means for impressing a display gate on said gate combining circuit when the amplitude of said other searching receiver output signal is proportional to the magnitude of the other of said corresponding tracking receiver and jammer transmitter output signals, a normally operative electronic switch, means for impressing said searching receiver video signals on said electronic switch, means for impressing the output of said electronic switch on said gate combining circuit, and means responsive to said fly-back gate for rendering said electronic switch inoperative.

3. In a system for countermeasures including a searching receiver having a directional antenna and means for producing video signals, a local oscillator signal, and first and second output signals with amplitudes respectively changing in proportion to the angular position of the searching receiver directional antenna and the frequency to which the searching receiver is tuned, said second output signal having a period short in comparison to that of said first output signal, said system also including at least a tracking receiver having a local oscillator signal representative of the frequency to which the tracking receiver is tuned and a jammer transmitter having a directional antenna, a local oscillator, and an output signal proportional in amplitude to the angular position of said jammer transmitter directional antenna, said system also including a cathode-ray type indictor having an evacuated envelope and an electron gun at one end of the envelope, a luminescent screen at the other end of the envelope, and first and second deflection means for deflecting the cathode-ray across the luminescent screen in two different directions, an arrangement for deflecting the cathode-ray of the indicator across the luminescent screen thereof in a manner to display indicia representative of the frequency and position of an enemy source of radiant energy, to generate a strobe line representing the frequency to which the tracking receiver is tuned, and to generate a strobe line representative of the position of the jammer transmitter directional antenna, said arrangement comprising: means for generating a fly-back gate approximately at the end of each period of said searching receiver second output signal, means for generating a coincidence gate each time the searching receiver local oscillator frequency becomes equal to that of the jammer transmitter local oscillator, means responsive to said coincidence gate for producing a sample signal having an amplitude proportional to that of said searching receiver second output signal at the moment said coincidence gate is generated, means for storing said sample signal until said fly-back gate is generated, means for applying only said one searching receiver output signal to said first cathode-ray deflection means between the times that said fly-back gate is generated and for applying only said stored sample signal to said first deflection means only during the time that said fly-back gate is generated, means for generating a sweep voltage having a period substantially equal to that of said fly-back gate, means for applying said sweep voltage to said second deflection means, said sweep voltage having a range sufficiently large to sweep the cathode-ray over a substantial portion of the luminescent screen, means for additionally applying said searching receiver first output signal to said second deflection means, and means for gating the cathode-ray of said indicator on when said searching receiver receives input signals, when said fly-back gate is generated, and when the directional antenna of said searching receiver and said jammer transmitter are in the same angular position.

4. In a system for countermeasures including a searching receiver having a directional antenna and means for producing video signals, a local oscillator signal, and first and second output signals with amplitudes respectively changing in proportion to the angular position of the searching receiver directional antenna and the frequency to which the searching receiver is tuned, said second output signal having a period short in comparison to that of said first output signal, said system also including at least a tracking receiver having a local oscillator output signal representative of the frequency to which the tracking receiver is tuned and a jammer transmitter having a directional antenna, a local oscillator, and an output signal proportional in amplitude to the angular position of said jammer transmitter directional antenna, said system also including a cathode-ray type indicator having an evacuated envelope, an electron gun at one end of the envelope, a luminescent screen at the other end, and vertical and horizontal deflection means for deflecting the cathode-ray across the luminescent screen vertically and horizontally respectively, an arrangement for deflecting the cathode-ray of the indicator across the luminescent screen thereof in a manner to display indicia representative of the frequency and position of an enemy source of radiant energy, to generate a strobe line representing the frequency to which the tracking receiver is tuned, and to generate a strobe line representative of the position of the jammer transmitter directional antenna, said arrangement comprising: means for generating a fly-back gate approximately at the end of each period of said searching receiver second output signal, means for producing a sample signal proportional to the amplitude of said searching receiver second ouput signal at the time that said searching receiver is tuned to the same frequency as that of said jammer local oscillator, means for storing said sample signal until said fly-back gate is generated, a first mixer for impressing a horizontal sweep voltage on the horizontal deflection means of the cathode-ray indicator, a first electronic switch responsive to said fly-back gate for impressing said stored sample signal on said first mixer, a second electronic switch adapted to be rendered inoperative during the time said fly-back gate is generated for impressing said searching receiver second output signal on said first mixer, but only during the time said fly-back gate is not generated, means responsive to said fly-back gate for generating a frequency strobe sweep voltage having a period substantially equal to that of said fly-back gate, a second mixer for applying a vertical sweep voltage to the vertical deflection means of the cathode-ray indicator, means for applying said frequency strobe sweep voltage to said second mixer, means for additionally applying said searching receiver first output signal to said second mixer, and means for gating the cathode-ray of said indicator on only when said searching receiver produces video signals, when said fly-back is generated, and during the full period between the times that said fly-back gate is generated immediately subsequent to the time that the angular positions of said jammer transmitter and searching receiver directional antennas are the same.

References Cited in the file of this patent

UNITED STATES PATENTS

2,496,560 Raymond ---------- Feb. 7, 1950

Approved For Release 2007/09/21 : CIA-RDP81-00120R000100050011-0