Approved For Release 2009/05/28 : CIA-RDP82-00046R000200020006-1

This is UNEVALUATED Information

25X1

SECRET SECURITY INFORMATION

25X1

Estimate of the Actual Peacetime Strength of the 103rd Mech. Regt.

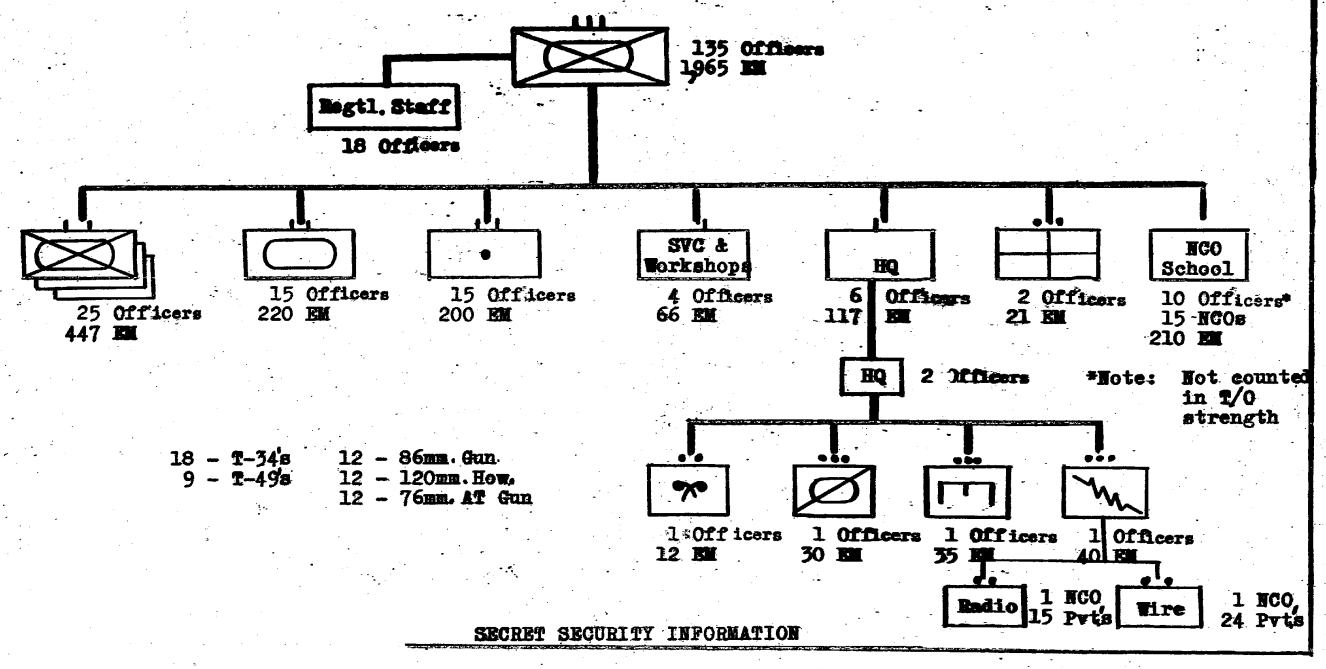

SECRET SECURITY INFORMATION

25 YEAR RE-REVIEW

Approved For Release 2009/05/28 : CIA-RDP82-00046R000200020006-1