Approved For Release 2001/03/17 : CIA-RDP82-00457R004500030010-2

25X1A

CENTRAL INTELLIGENCE AGENCY

[redacted]

Attachment C

Telephone Communications of Cotton Gin No. 42 in Kokand

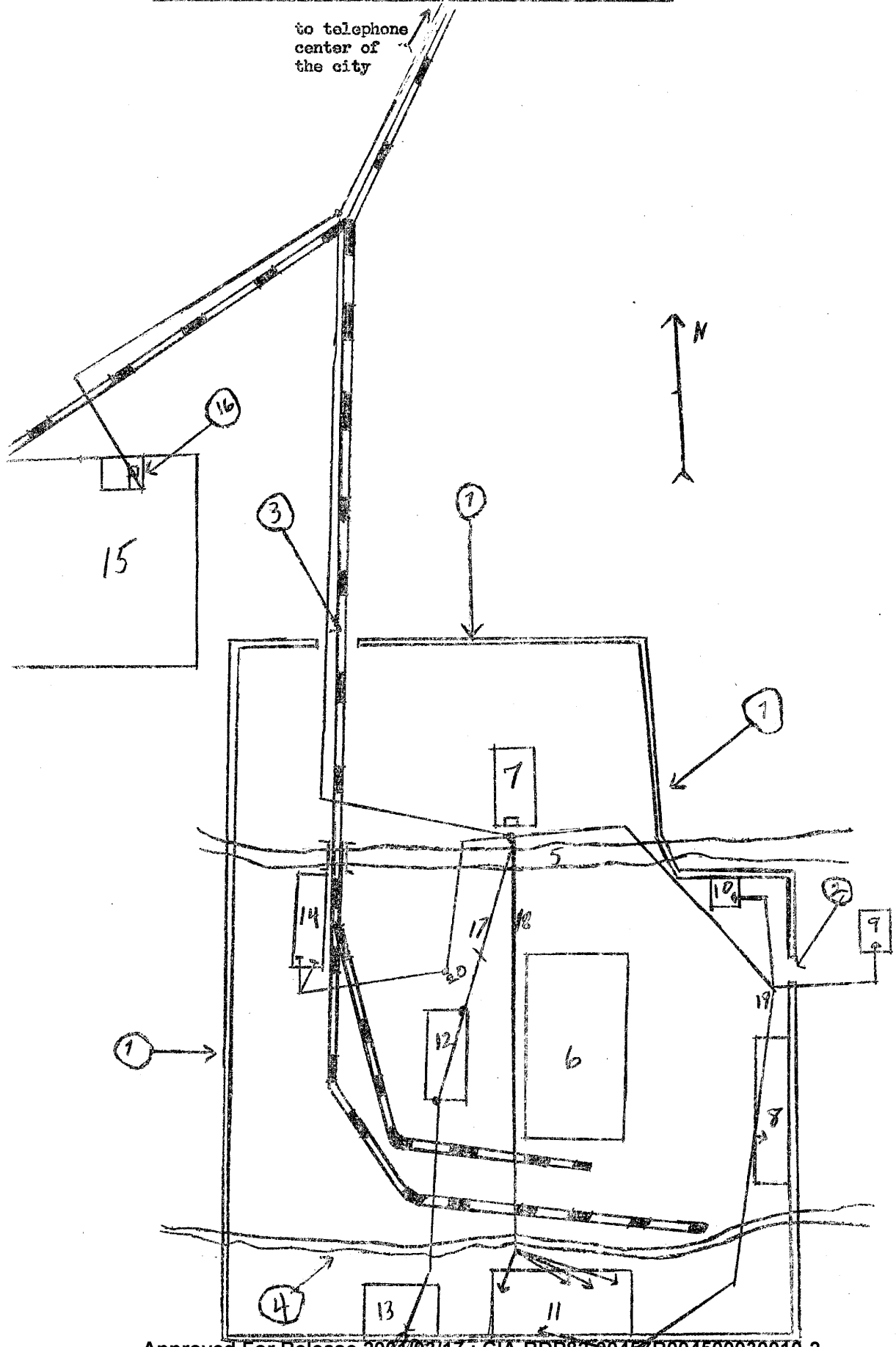

Approved For Release 2001/03/17 : CIA-RDP82-00457R004500030010-2