RESTRICTED CONFIDENTIAL
Approved For Release 1999/09/09 : CIA-RDP82-00457R005200230012-0

HEAVY DUTY CENTRE LATHE V[redacted]ODEL 535

25X1X [redacted]

CPYRGHT

This machine has been designed and built for a wide variety of precision turning operations and for economic use of carbide-tipped tools. To increase the rigidity of the machine the headstock, gearbox and quick change gearbox are built in one piece forming a column to which the bed is flanged.

THE MAIN SPINDLE

is driven by electric motor through the gearbox without belt transmission. A double-acting multiple disc clutch is mounted in the gearbox for starting, stopping and reversing the spindle rotation. By change gears three different ranges of spindle rotation are obtainable. At the front the spindle rotates in an adjustable plain bearing at the rear it runs in an anti-friction bearing. The gears and bearings are lubricated by a geared pump located inside the gearbox.

THE QUICK CHANGE GEARBOX

is totally enclosed without the usual opening for the tumbler lever. A wide range of transmission ratios enables to cut all commonly used metric, Whitworth and module threads. Only one setting of change gears is sufficient for cutting each class of threads.

THE APRON

is arranged for automatic feed release when operating again[illegible]ive stop.

THE CARRIAGE

consists of the longitudinal slide carrying the cross slide and the swi[illegible]p slide with four-way toolholder.

THE BED

has two flat carriage guideways. The play in the front carriage guide is eliminated b[illegible] taper gib both in horizontal and vertical direction. The tailstock guide is flat at the front and [illegible]ismatic at the rear. The conveniently designed bed allows for an ample chip clearance into the chip pan.

In ordering, specify voltage, phase and frequency of power supply!

~~RESTRICTED~~
CONFIDENTIAL
Approved For Release 1999/09/09 : CIA-RDP82-00457R005200230012-0

Approved For Release 1999/09/09 : CIA-RDP82-00457R005200230012-0

S35

CPYRGHT

SPECIFICATIONS

		Metric		English
Swing over bed – – – – – – – – – – – – – – – mm		355		14″
Distance between centres – – – – – – – – – – – mm	1000	1500	39″	59″
Swing over carriage – – – – – – – – – – – – – mm	190			$7^1/_2$″
Width of bed – – – – – – – – – – – – – – – – mm		315		$12^3/_8$″
Diameter of face plate – – – – – – – – – – – mm		355		14″
Bore of spindle – – – – – – – – – – – – – – – mm		45		$1^3/_4$″
Taper in spindle – – – – – – – – – – metric 1 : 20		50		50
Taper of lathe centres – – – – – – – – – – – Morse		4		4
Spindle nose according to – – – – – – – – – – – –		DIN 800		DIN 800
Spindle speeds: Number – – – – – – – – – – – –		18		18
Low range – – – – – – – R. p. M.	12,5	630	12,5	630
Standard range – – – – – R. p. M.	25	1250	25	1250
Increased range – – – – – R. p. M.	40	2000	40	2000
Feeds: Number – – – – – – – – – – – – – – – – –		54		54
Range of longitudinal feeds – – – – mm/rev.	0,1	6	cuts per inch	4 – 245
Range of cross feeds – – – – – – – mm/rev.	0,02	1,2	cuts per inch	21 – 1270
Pitch of lead screw – – – – – – – – – – – – – mm		6		
Threads: Number – – – – – – – – – – – – – – – –		54		54
Metric, pitch – – – – – – – – – – – – mm	0,5	30		
Whitworth – – – – – – – – – – – – t. p. i.			1	60
Module, module – – – – – – – – – – – – –	0,5	30	0,5	30
Electric motor: Speed – – – – – – – – – R. p. M.		1400		1400
Output – – – – – – – – – – – – HP		5,5		5,5
for distance between centres – mm	1000	1500	39″	59″
Floor space required – – – – – – – – – – – – mm	1000 × 2620	1000 × 3120	39″ × 103″	39″ × 123″
Weight of machine: with standard equipment – kg	1700	1760	3750 lbs	3900 lbs
with packing – – – – – – – kg	1780	1845	3950 lbs	4100 lbs
with seaworthy packing – kg	1880	1945	4150 lbs	4300 lbs
Contents boxed – – – – – – – – – – – – – – – m^3	6,2	7,6	220 cu. ft.	270 cu. ft.
Size of case: length – – – – – – – – – – – – – cm	300	340	118″	134″
width – – – – – – – – – – – – – – cm	115	125	45″	49″
height – – – – – – – – – – – – – – cm	180	180	71″	71″

On request the machine can be supplied with a pitch of lead screw of $^1/_4$″.

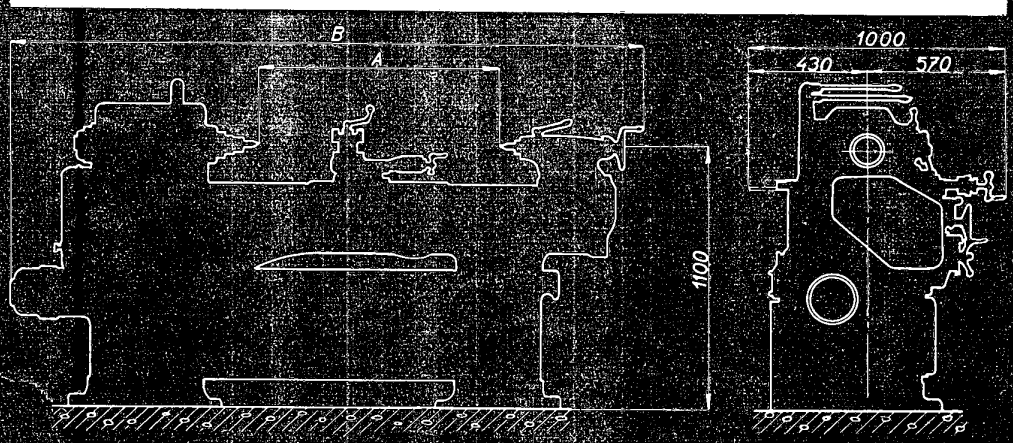

Approved For Release 1999/09/09 : CIA-RDP82-00457R005200230012-0

RESTRICTED

CONFIDENTIAL

CPYRGHT

STANDARD EQUIPMENT

Electric motor with electrical equipment, driver plate, 2 lathe centres, reducing sleeve for the main spindle, thread indicator, four-way toolholder, 1 set of change gears, micrometer positive stop, chip pan, set of spanners, operating plates, operator's instruction booklet.

OPTIONAL EQUIPMENT

Cooling attachment with electric pump, safety switch, piping and fittings, combined taper turning attachment, rear tool-post, face plate dia. 355 mm with 4 hardened reversible jaws, reinforced face plate dia. 355 mm with accurately guided jaws, steady rest, follow rest, backplate for clamping scroll chuck dia. 200 mm, scroll chuck dia. 200 mm, length stop drum, cross stop drum, electric spot light without bulb, 1 set of change gears for increased spindle speed range.

N.V. HANDEL MIJ. v/h
VERTEGENWOORDIGING
TSJECHOSLOVAAKSE
INDUSTRIE
RIJSWIJK 10A
DJAKARTA

KOVO

TOS

LIMITED, METAL AND ENGINEERING PRODUCTS
AND RAW MATERIALS TRADING COMPANY,
DIVISION II,
VÁCLAVSKÉ NÁM. 56, PRAHA II, CZECHOSLOVAKIA

CONFIDENTIAL

RESTRICTED

P 112 4-1949

Printed in Czechoslovakia - Unie, Praha

Approved For Release 1999/09/09 : CIA-RDP82-00457R005200230012-0

Approved For Release 1999/09/09 : CIA-RDP82-00457R005200230012-0

CPYRGHT

00457R005200230012-0

CPYRGHT

25X1A

Approved For Release 1999/09/09 : CIA-RDP82-00457R005200230012-0

RESTRICTED

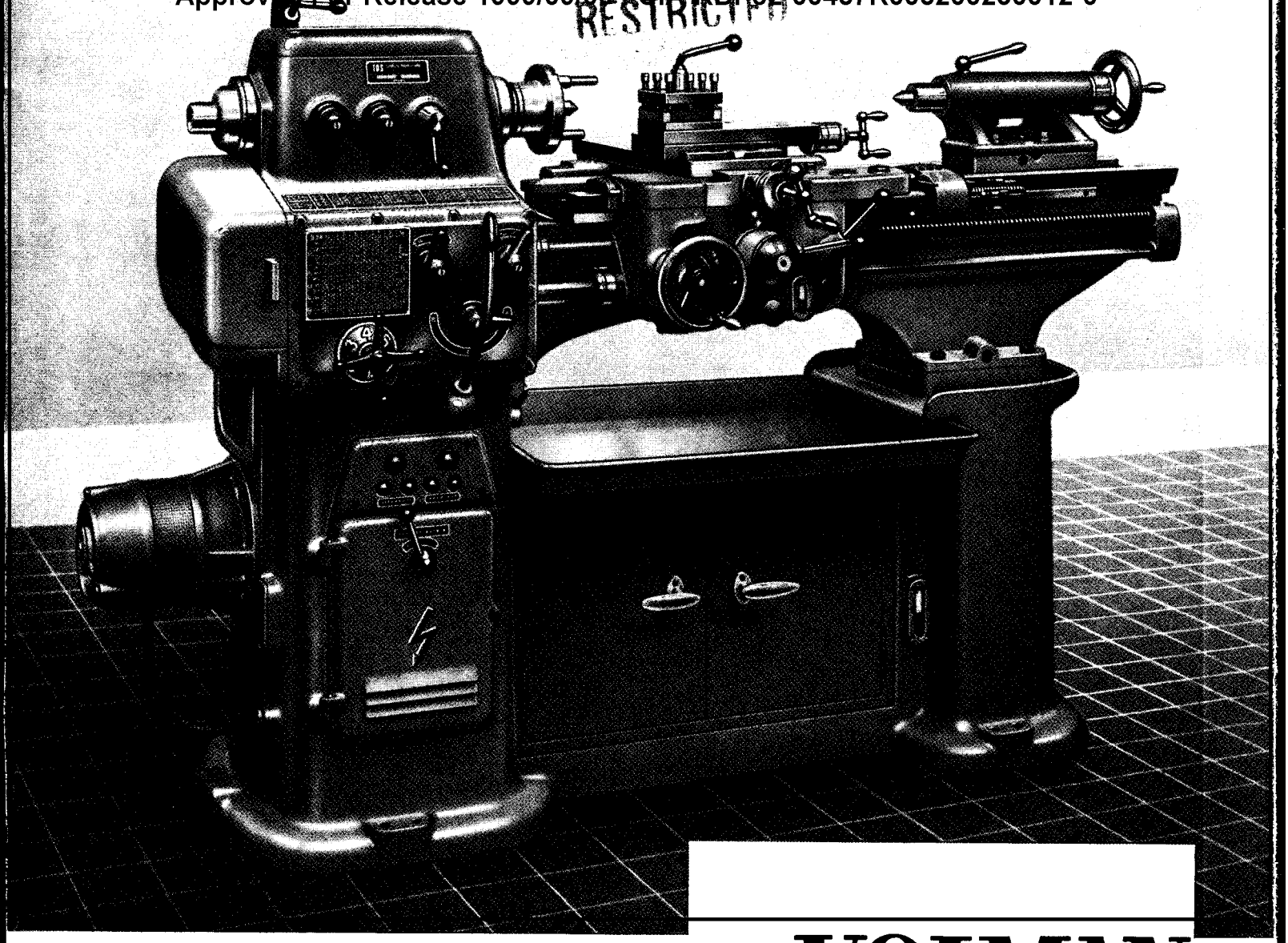

Centre Lathe VOLMAN

High duty machine for a wide variety of precision work, designed and built to take full advantage of carbide-tipped tools.

- **Swing over bed 280 mm — 11"**
- **Distance between centres 750 mm — 29 1/2"**
- **Removable bridge in front of face plate**
- **Wide spindle speed range**
- **Wide feed range**

To increase the rigidity of the machine, headstock, gearbox and quick change gearbox are built as a single casting in form of a column to which the bed is flanged.

Approved For Release 1999/09/09 : CIA-RDP82-00457R005200230012-0

RESTRICTED

VOLMAN

Centre Lathe

Approved For Release 1999/09/09 : CIA-RDP82-00457R005200230012-0

UNITED MACHINE TOOL FACTORIES • PRAHA - CZECHOSLOVAKIA

CPYRGHT
Approved For Release 1999/09/09 : CIA-RDP82-00457R005200230012-0

CPYRGHT

Approved For Release 1999/09/09 : CIA-RDP82-00457R005200230012-0

SPECIFICATIONS (Subject to change without notice)

Swing over bed	mm	280	11"
Distance between centres	mm	750	29½"
Swing over carriage	mm	150	5⅞"
Swing in gap	mm	370	14½"
Useful clearance in front of face plate	mm	50	2"
Width of bed	mm	250	9⅞"
Diameter of face plate	mm	250	9⅞"
Bore through spindle	mm	36	1⅜"
Taper in spindle	metric No.	40	40
Taper of lathe centres	Morse No.	3	3
Spindle nose according to DIN 800		M 68	M 68
Spindle speeds: 3 speed bands, 18 speeds each	R. p. M.	20 — 1000	20 — 1000
	R. p. M.	31.5 — 1600	31.5 — 1600
On special order	R. p. M.	63 — 3150	63—3150
Feeds: 36 longitudinal feeds ranging from	mm/rev.	0.03 — 3.52	t. p. i. 9 — 750
36 cross feeds ranging from	mm/rev.	0.01 — 1.22	t. p. i. 21 — 2540
Pitch of lead screw	mm	6	
Threads: 36 metric threads, pitch	mm	0.375 — 44	
36 module threads, module	mm	0.375 — 44	
36 Whitworth threads	t. p. i.		¾ — 88
Speed of motor	R. p. M.	2800	2800
Output of motor	H. P.	4	4
Floor space required (width × length)	mm	910 × 2140	36" × 85"
Weight of machine: with standard equipment	kg	? 1930	lbs 2400
with packing	kg	? 1250	lbs 2760
with overseas packing	kg	1450	lbs 3200
Contents boxed	m³	4	cu. ft. 142
Size of case (width × length × height)	cm	115 × 230 × 165	45" × 95" × 65"

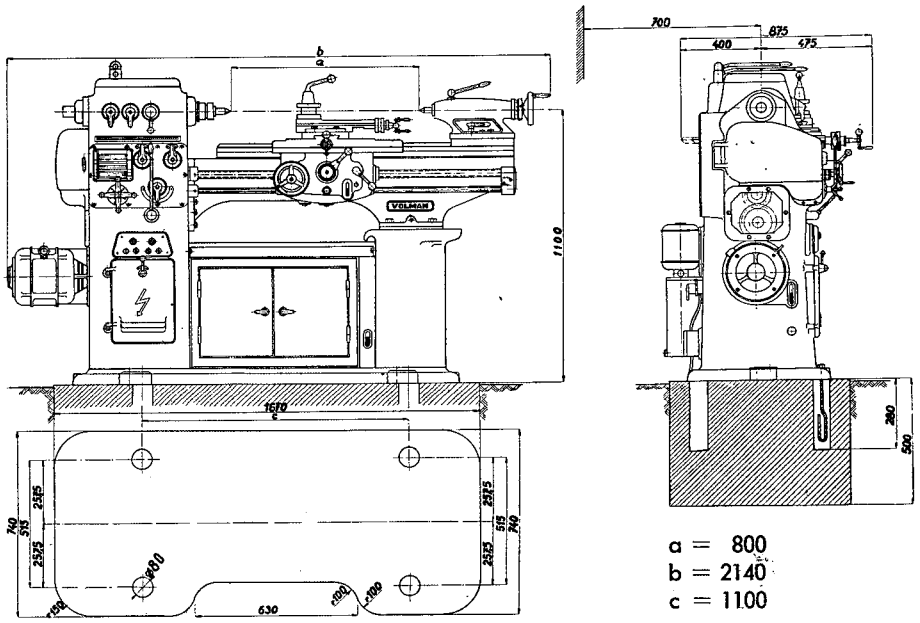

a = 800
b = 2140
c = 1100

25X1X

N. V. HANDEL MIJ. v/h
VERTEGENWOORDIGING
TSJECHOSLOVAAKSE
INDUSTRIE
RIJSWIJK 18A
DJAKARTA

Approved For Release 1999/09/09 : CIA-RDP82-00457R005200230012-0

[redacted] Approved For Release 1999/09/09 : CIA-RDP[redacted]
25X1 CONFIDENTIAL

SR 200

CPYRGHT

CPYRGHT

CENTRE LATHE

N.V. HANDEL MIJ. v/h
VERTEGENWOORDIGING
TSJECHOSLOVAAKSE
INDUSTRIE
RIJSWIJK 18A
BATAVIA-C.

CONFIDENTIAL
00520023

MINERAL MACHINE TOOL FACTORIES • PRAHA • CZECHOSLOVAKIA

Approved For Release 1999/09/09 : CIA-RDP82-00457R005200230012-0

SR 200

CPYRGHT

CENTRE LATHE

CPYRGHT Approved For Release 1999/09/09 : CIA-RDP82-00457R005200230012-0

RESTRICTED CONFIDENTIAL

SPECIFICATIONS:

		Metric		English	
Swing over bed	mm	390		15 1/4"	
Swing in gap	mm	550		21 5/8"	
Useful clearance in front of face plate	mm	175		7"	
Swing over carriage	mm	240		9 1/2"	
Distance between centres	mm	1000 ou 1500		39 1/2" or 59"	
Bore of spindle	mm	35		1 3/8"	
Taper in spindle	metric	40		40	
Taper of lathe centres	Morse	2		2	
Spindle nose according to DIN 800		M 60		M 60	
Maximum swing with steady rest	mm	90		3 1/2"	
Maximum swing with follov rest	mm	90		3 1/2"	
Width of bed	mm	265		10 1/4"	
Diameter of face plate	mm	360		14 1/8"	
Diameter of catch plate	mm	160		6 1/4"	
Maximum section of tool	mm	22		7/8"	
Spindle speeds: Number		8		8	
Range	R.p.M.	30-750		30-750	
Longitudinal feeds: Number		32		32	
Range	mm/rev.	0,06-0,92		cuts p. inch 28 - 424	
Cross feeds	mm/rev.	0,02-0,31		cuts p. inch 84 - 1272	
Pitch of lead screw	t.p.i.	4		4	
Threads: Metric, pitch	mm	0,2-6		0.2-6	
Whitworth, threads per inch	t.p.i.	7,5-60		7.5-60	
Electric motor: Speed	R.p.M.	1420		1420	
Output	HP	2		2	
Dimensions and weights for distance between centres:		1000 mm	1500 mm	39 1/2"	59"
Floor space required	mm	880 x 2070	880 x 2570	34 1/2" x 81"	34 1/2" x 101"
Weight of machine: with standard equipment	kg	785	845	lbs 1730	lbs 1860
with packing	kg	825	880	lbs 1820	lbs 1940
with seaworthy packing	kg	1055	1150	lbs 2320	lbs 2530
Contents boxed	m^3	3,1	3,8	cu. ft. 110	cu. ft. 134
Size of case	cm	95 x x218150	95 x 150 x 268	37 1/2"x59"x85"	39 1/2"x59x105"

A 1000, 1500 B 2070, 2570 C 1850, 2350

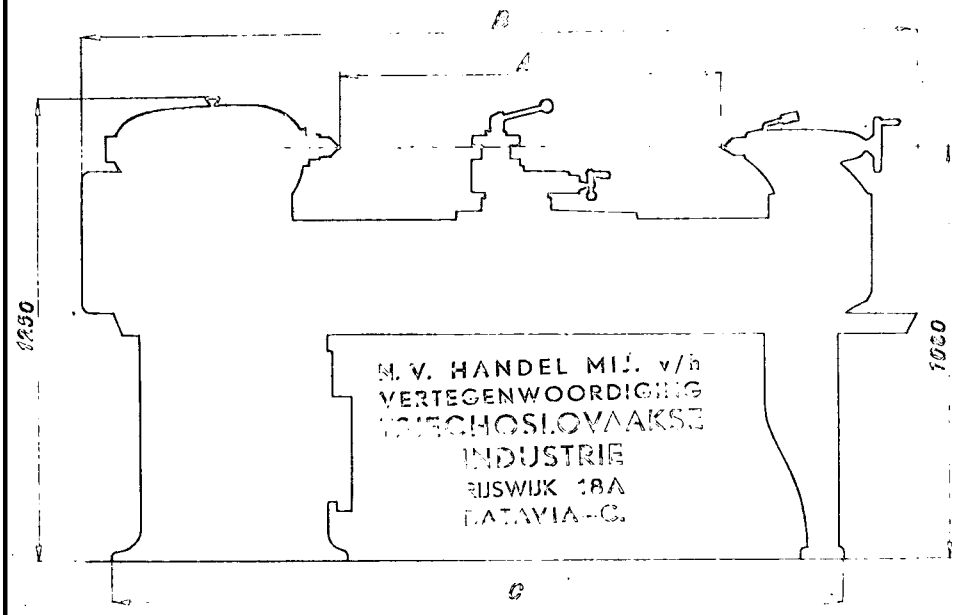

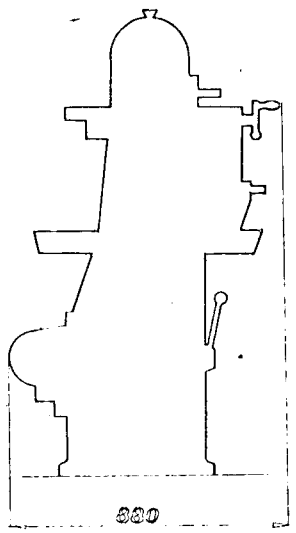

As improvements in design are continually being made, this specification is not to be regarded as binding in detail, and dimensions are subject to alteration without notice.

IN ORDERING, SPECIFY VOLTAGE, PHASE, AND FREQUENCY OF POWER SUPPLY!

Approved For Release 1999/09/09 : CIA-RDP82-00457R005200230012-0

KOVO LIMITED METAL ENGINEERING PRODUCTS AND RAW MATERIALS TRADING COMPANY
DIVISION II, PRAHA II, VÁCLAVSKÉ NÁM. 56.

CPYRGHT
Approved For Release 1999/09/09 : CIA-RDP82-00457R005200230012-0

DESCRIPTION:

Headstock. The spindle runs in adjustable plain bearings. End thrust is taken up by an axial ball bearing. The spindle is driven from the gearbox located inside the column either directly or through a reducing countershaft.

The gearbox ist totally enclosed and contains gears giving 4 spindle speeds changed by two hand levers. A special device does not permit to operate these levers simultaneously thus preventing any damage for the machine due to incorrect operation. The power is transmitted from the electric motor to the gearbox by V-belts.

The quick change gearbox enables a rapid selection of feeds and threads. The machine is adapted for cutting all commonly used metric and Whitworth threads.

The carriage with power longitudinal and cross feed is equipped with a 4-way tool holder. A safety clutch protects the machine against overload.

The bed has carriage guideways which are prismatic at the front and flat at the rear. In front of face plate a gap is provided with an accurately fitted removable bridge.

The tailstock is cross adjustable. The tailstock centre sleeve may be easily shifted.

Drive. The machine is driven by an electric motor attached to a slide for correct belt tension. Starting and stopping of motor is accomplished by a hand lever operated switch, the lever being situated on the right-hand side of the carriage box

Standard equipment: 4-jaw face plate, catch plate, 4-jaw tool holder, steady and follow rest, thread indicator, 2 lathe centres Morse No. 2, reducing sleeves, set of change gears, set of spanners, operating instructions.

Optional equipment: flange for universal chuck dia. 190 or 210 mm.

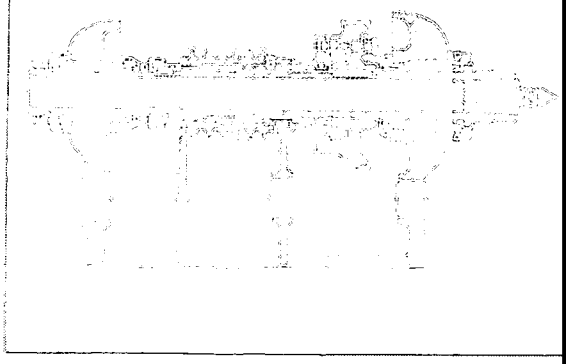

SPINDLE

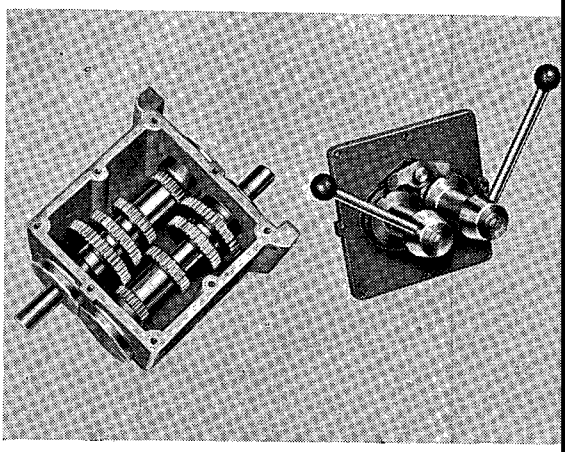

GEARBOX

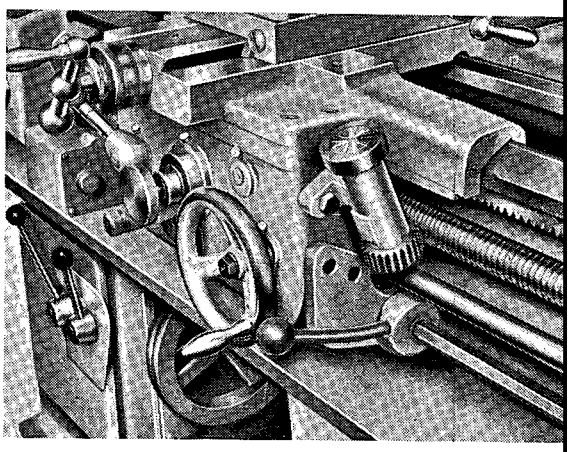

THREAD INDICATOR

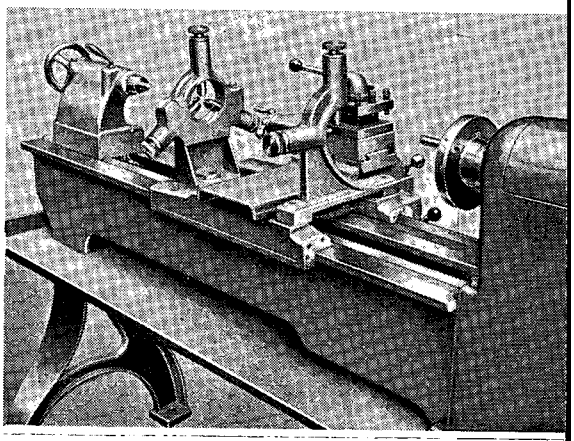

STEADY AND FOLLOW REST

Approved For Release 1999/09/09 : CIA-RDP82-00457R005200230012-0

Approved For Release 1999/09/09 : CIA-RDP82-00457R005200230012-0

45

CPYRGHT

SPECIFICATIONS

	Metric			English		
Swing over bed – – – – – – – – – – – mm			450			$17^3/_4''$
Distance between centres – – – – – – mm	1000	1500	2000	39″	59″	79″
Swing over carriage – – – – – – – – – mm			250			$9^7/_8''$
Swing in gap – – – – – – – – – – – – – mm			670			$26^3/_8''$
Useful clearance in front of face plate – mm			220			$8^5/_8''$
Width of bed – – – – – – – – – – – – mm			400			$15^3/_4''$
Diameter of face plate – – – – – – – mm			425			$16^3/_4''$
Bore of spindle – – – – – – – – – – – mm			57			$2^1/_4''$
Taper in spindle – – – – – – metric 1:20			62			62
Taper of lathe centres – – – – – – Morse			4			4
Spindle nose according to – – – – – – – –			DIN 800			DIN 800
Spindle speeds: Number– – – – – – – – –			18			18
Standard range – R. p. M.		16	800		16	080
Increased range – R. p. M.		23	1150		23	1150
Feeds: Number – – – – – – – – – – – – –			54			54
Range of longitudinal feeds mm/rev.		0,1	6	cuts per inch	4 –	245
Range of cross feeds – – – mm/rev.	0,02		1,2	cuts per inch	21 –	1270
Pitch of lead screw – – – – – – – – – mm			6			
Threads: Number – – – – – – – – – – – –			54			54
Metric, pitch – – – – – – – – mm		0,5	30			
Whitworth – – – – – – – – t. p. i.					1	60
Module, module – – – – – – – – –		0,5	30		0,5	30
Electric motor: Speed – – – – – R. p. M.			1400			1400
Output – – – – – – – HP						
for distance between centres – – – mm	1000	1500	2000	39″	59″	79″
Floor space required – – – – – – – – – mm	1200 × 2780	× 3280	× 3780	47″ × 110″	× 130″	× 150″
Weight of machine:						
with standard equipment – – – – – kg	2300	2400	2500	5100 lbs	5300 lbs	5500 lbs
with packing – – – – – – – – – – – – kg	2570	2720	2880	5650 lbs	6000 lbs	6400 lbs
with seaworthy packing – – – – – – kg	2600	2760	2930	5750 lbs	6100 lbs	6500 lbs
Contents boxed – – – – – – – – – – – m^3	6,7	7,6	8,7	240 cu. ft.	270 cu. ft.	310 cu. ft.
Size of case: length – – – – – – – – – cm	300	340	390	118″	134″	154″
width – – – – – – – – – – cm	125	125	125	49″	49″	49″
height – – – – – – – – – – cm	180	180	180	71″	71″	71″

On request the machine can be supplied with a pitch of lead screw of $^1/_4''$.

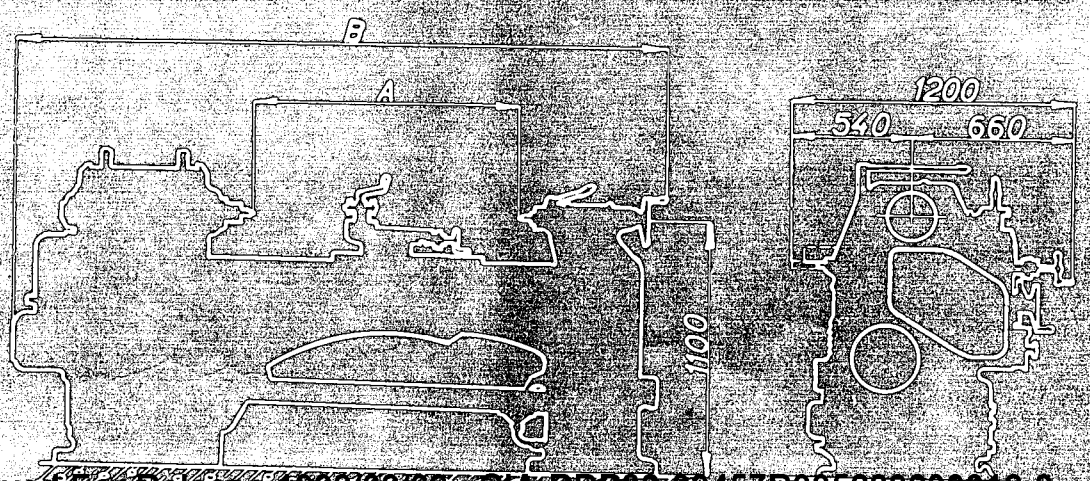

Approved For Release 1999/09/09 : CIA-RDP82-00457R005200230012-0

	1000	1500	2000
A	1120	1620	2120

As improvements in design are continually being made, this specification is not to be regarded as binding in detail, and dimensions are subject to change without notice.

Approved For Release 1999/09/09 : CIA-RDP82-00457R005200230012-0

CONFIDENTIAL

HEAVY DUTY CENTRE LATHE VOLMAN MODEL 45

CPYRGHT

This machine has been designed and built for a wide variety of precision turning operations and for economic use of carbide-tipped tools. To increase the rigidity of the machine the headstock, gearbox and quick change gearbox are built in one piece forming a column to which the bed is flanged.

THE MAIN SPINDLE

is driven by electric motor through the gearbox without belt transmission. A double-acting multiple disc clutch is mounted in the gearbox for starting, stopping and reversing the spindle rotation. At the front the spindle rotates in an adjustable plain bearing at the rear it runs in an anti-friction bearing. The gears and bearings are lubricated by a geared pump located inside the gearbox.

THE QUICK CHANGE GEARBOX

is totally enclosed without the usual opening for the tumbler lever. A wide range of transmission ratios enables to cut all commonly used metric, Whitworth and module threads. Only one setting of change gears is sufficient for cutting each class of threads.

THE APRON

is arranged for automatic feed release when operating against positive stop.

THE CARRIAGE

consists of the longitudinal slide carrying the cross slide and the swivelling top slide with four-way toolholder.

THE BED

has two flat carriage guideways. The play in the front carriage guide is eliminated by a taper gib both in horizontal and vertical direction. The tailstock guide is flat at the front and prismatic at the rear. The conveniently designed bed allows for an ample chip clearance into the chip pan.

In ordering, specify voltage, phase and frequency of power supply!

Approved For Release 1999/09/09 : CIA-RDP82-00457R005200230012-0

Approved For Release 2001/09/09 : CIA-RDP82-00457R005200230012-0

45

CIA-RDP82-00457R005200230012-0

Approved For Release 1999/09/09 : CIA-RDP82-00457R005200230012-0

CONFIDENTIAL
RESTRICTED

CPYRGHT

STANDARD EQUIPMENT

Electric motor with electrical equipment, driver plate, 2 lathe centres, reducing sleeve for the main spindle, thread indicator, four-way toolholder, 1 set of change gears, micrometer positive stop, chip pan, set of spanners, operating plates, operator's instruction booklet.

OPTIONAL EQUIPMENT

Cooling attachment with electric pump, safety switch, piping and fittings, combined taper turning attachment, rear tool-post, face plate dia. 425 mm with 4 hardened reversible jaws, reinforced face plate dia. 425 mm with accurately guided jaws, steady rest, follow rest, backplate for clamping scroll chuck dia. 240 mm, scroll chuck dia. 240 mm, length stop drum, cross stop drum, electric spot light without bulb, 1 set of change gears for increased spindle speed range, bed with removable bridge.

KOVO

LIMITED, METAL AND ENGINEERING PRODUCTS
AND RAW MATERIALS TRADING COMPANY,
DIVISION II,
VÁCLAVSKÉ NÁM. 56, PRAHA II, CZECHOSLOVAKIA

TOS

P 112 5-1949

CONFIDENTIAL

Printed in Czechoslovakia - Unie, Praha

Approved For Release 1999/09/09 : CIA-RDP82-00457R005200230012-0

CONFIDENTIAL
Approved For Release 1999/09/09 : CIA-RDP82-00457R005200230012-0

Upright Drill

Model

VR32

CPYRGHT

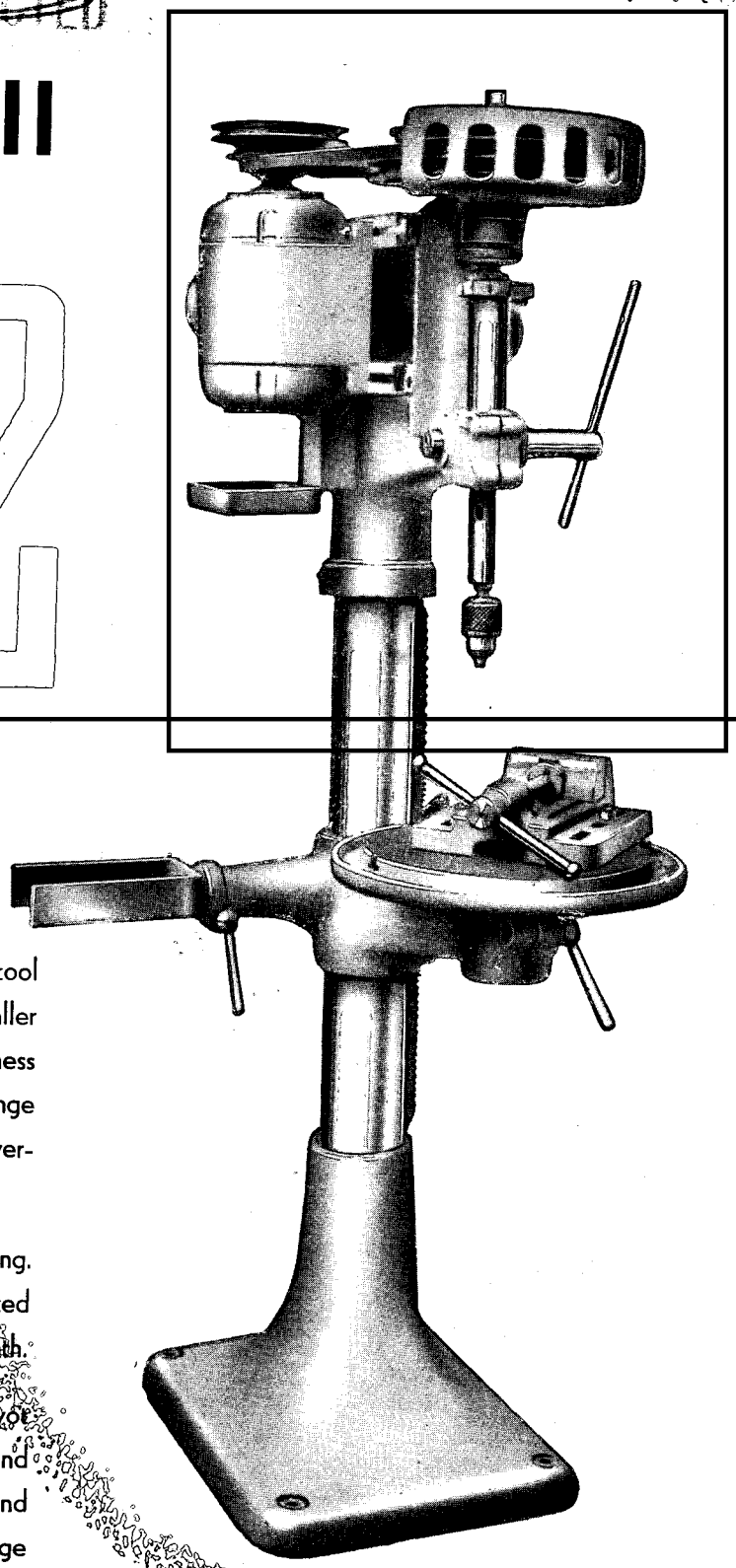

This is a fast operating precision machine tool for saving time, especially well suited for smaller shops where reduced floor space and readiness for use are of prime importance. The wide range of applications is increased by the large overhang of the spindle.

THE WORK SPINDLE runs in a ball-bearing. The spindle sleeve is fitted with a graduated scale and a stop for adjusting the drilling depth.

THE TABLE is circular and rotates on a pivot mounted in the swivelling table arm. Around the outside of the table is an oil groove and in its centre a hole to prevent any damage when finishing the cut. The table is raised and lowered by a hand crank through a pinion, on an accurately finished guide comb. On the hub of the swivelling table arm is a fork for holding wheels.

THE DRIVE is by a step pulley from the electric motor mounted vertically at the top of the column. The motor is easily adjusted for correct belt tension.

N.V. HANDEL M.J. v/h
VERTEGENWOORDIGING
TSJECHOSLOVAAKSE
INDUSTRIE
RIJSWIJK 18A
DJAKARTA

RESTRICTED
CONFIDENTIAL
Approved For Release 1999/09/09 : CIA-RDP82-00457R005200230012-0

Approved For Release 1999/09/09 : CIA-RDP82-00457R005200230012-0

CONFIDENTIAL

CPYRGHT

STANDARD EQUIPMENT:

Vice, drill chuck, V-belt, metal fork for holding wheels.

In ordering, specify voltage, phase and frequency of power supply!

Specifications:

Maximum drilling diameter	mm	32
Maximum drilling depth	mm	125
Diameter of spindle in spindle sleeve	mm	23/25
Taper in spindle	Morse	3
Diameter of working table	mm	350
Max. distance, spindle nose to working surface of table	mm	560
Distance, centreline of spindle to column	mm	330
Number of spindle speeds		4
Range of spindle speeds	R. p. m.	180—710
Electric motor: Speed	R. p. m.	900
Output	HP	1
Floor space required	mm	880x700
Weight of machine with standard equipment	kg	280
Weight of machine with packing	kg	310
Contents boxed	m^3	1.5

N. V. HANDEL MIJ. v/h
VERTEGENWOORDIGING
TSJECHOSLOVAAKSE
INDUSTRIE
RIJSWIJK 18A
DJAKARTA

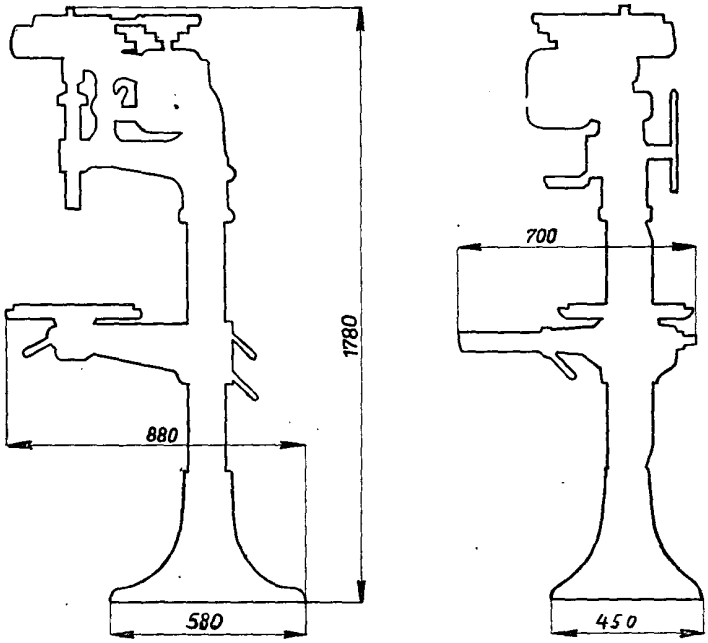

As improvements in design are continually being made, this specification is not to be regarded as binding in detail, and dimensions are subject to alteration without notice.

Approved For Release 1999/09/09 : CIA-RDP82-00457R005200230012-0

Approved For Release 1999/09/09 : CIA-RDP82-00457R005200230012-0

CONFIDENTIAL

COPYRIGHT

MACHINES A PERCER A GRAND RENDEMENT TYPES V-30-40-50.

La poupé porte-broche, est entièrement protégée contre la pénétration des poussières. La transmission de la force se fait par les engrenages balladeurs en acier chrome-nickel, traités, et les accouplements à disques, pour la marche à droite et à gauche. La broche de perçage, en acier au chrome-nickel, est rectifiée et munie d'une tête au cône Morse; elle tourne dans une douille cannelée à six rainures.

La boîte d'avances, est entièrement protégée contre la pénétration des impuretés. L'avance s'effectue soit à la main, soit automatiquement, avec déclenchement automatique. La profondeur de perçage exacte est règlable suivant une échelle graduée. Le déplacement vertical de la boîte d'avances, se fait à l'aide d'une manivelle; au modèle V-50, ce règlage est également mécanique.

Le changement des vitesses de la broche, se fait à l'aide d'un levier se trouvant du côté gauche de la boîte de vitesses. Le levier à main se trouvant du côté droit de la poupée porte-broche, sert à actionner l'accouplement à disques pour la marche à gauche ou à droite de la broche et pour l'embrayage du retour.

La table, est de forme carrée et munie de rainures de fixation et d'une rainure collectrice pour le liquide de refroidissement. Elle est règlable dans le sens vertical à l'aide d'une manivelle et d'une vis téléscopique.

Le montant, amplement dimensionné, est munie d'un guidage commun pour la table et la boîte d'avances. De robustes brides de fixation, relient le montant à la plaque-base et la poupée porte-broche.

Le dispositif de refroidissement, se compose d'une électropompe et de tuyauteries. La plaque-base sert de récipient à liquide de refroidissement.

Executions spéciales: Machines à percer multibroches, à table et montant communs; table ronde avec mouvement circulaire et appareil diviseur; support croisé au lieu de la table normale. Au modèle V-50, au lieu de la table normale, avec table basculante.

Accessoires normaux: moteur électrique a courant alternatif à changement de pôles, 220 ou 380 volts, 50 périodes, commutateur, courroies trapézoidales, capuchons-protecteurs pour les courroies, électropompe et tuyauteries et clefs nécessaires.

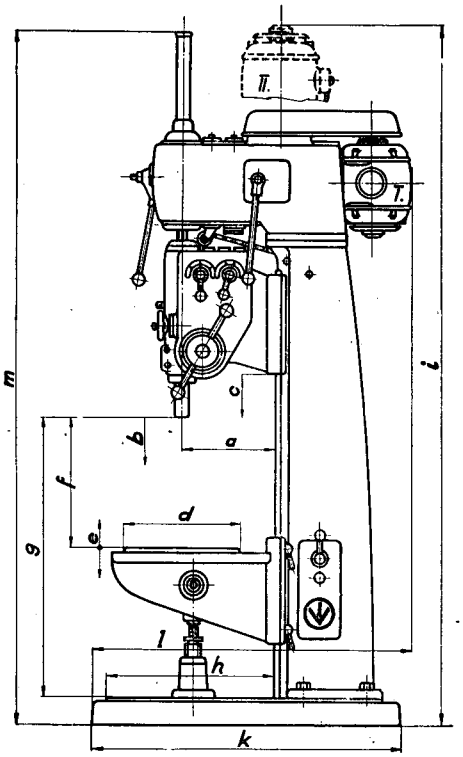

Accessoires spéciaux:

étaux parallèles, mandrins à trois machoires, avec pivot, douilles de réduction.

N.V. HANDEL MIJ. v/h
VERTEGENWOORDIGING
TSJECHOSLOVAAKSE
INDUSTRIE
RIJSWIJK 18A
DJAKARTA

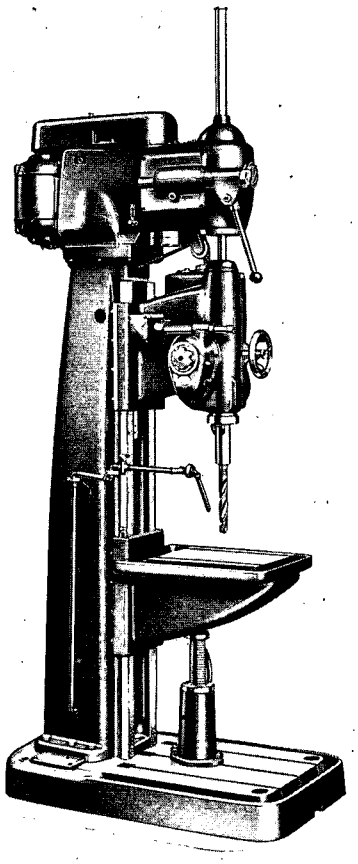

Modèle V-30.

Modèle	a	b	c	d	e	f	g	h	i	k
V-30	320	220	250	400 × 320	500	600	1050	600 × 500	2500	1130
V-40	375	240	300	450 × 450	520	650	1120	660 × 540	2800	1260
V-50	420	265	350	500 × 500	600	750	1200	740 × 560	3020	1380

DIMENSIONS PRINCIPALES:		V-30	V-40	V-50
Capacité de perçage dans de l'acier de 60 kgrs jusqu'au Ø de	mm	30	40	50
Portée de la broche	mm	320	375	420
Course de la broche	mm	220	240	265
Cône Morse de la broche	No	4	4	5
Distance max. entre le nez de la broche et la table	mm	600	650	750
Distance max. entre le nez de la broche et la plaque-base	mm	1050	1120	1200
Surface utile de la table	mm	400 × 320	450 × 450	500 × 500
Surface utile de la plaque-base	mm	600 × 500	660 × 540	740 × 560
12 vitesses de la broche	mm	60—1200	48—950	37—760
Gamme des avances m/m par tour		0,12—0,40	0,12—0,80	0,12—1,25
Puissance du moteur de 1400/2800 tpm	CV	2—2,6	3—4	3,4—5,5
Poids net	kg	975	1400	1850
Dimensions de la caisse	mm	800x1300x2600	900x1450x2600	1000x1600x2750

ATELIERS RÉUNIS DE CONSTRUCTION DE MACHINES-OUTILS

Entreprise Nationale

Praha VII., Přístavní ul. 28 — Tchécoslovaquie.

Télégrammes: Sotos Praha
Téléphone: Praha 26755.
Télétype: Praha 243.

Codes: A B C 6th Edition, Bentley's Complete Phrase Code, Mosse & Suppl.

Approved For Release 1999/09/09 : CIA-RDP82-00457R005200230012-0

CONFIDENTIAL

CONFIDENTIAL
RESTRICTED
Approved For Release 1999/09/09 : CIA-RDP82-00457R005200230012-0

VOLMAN

CPYRGHT

MACHINES A PERCER A GRAND RENDEMENT

Modèles:

V-30

V-40

V-50

CPYRGHT

N.V. HANDEL MIJ. v/h
VERTEGENWOORDIGING
TSJECHOSLOVAAKSE
INDUSTRIE
RIJSWIJK 18A
DJAKARTA

CPYRGHT

AVANTAGES PRINCIPAUX:

Grande stabilité • Gamme de vitesses étendue • Règlage des vitesses par levier unique • Emploi des meilleures matières • 12 vitesses de la broche • Accouplement à disques pour la marche à droite et à gauche • Débrayage automatique en profondeur dans les deux sens • Tous les engrenages tournent dans un bain d'huile • Disposition de la machine pour le taraudage • Profondeur de perçage réglable.

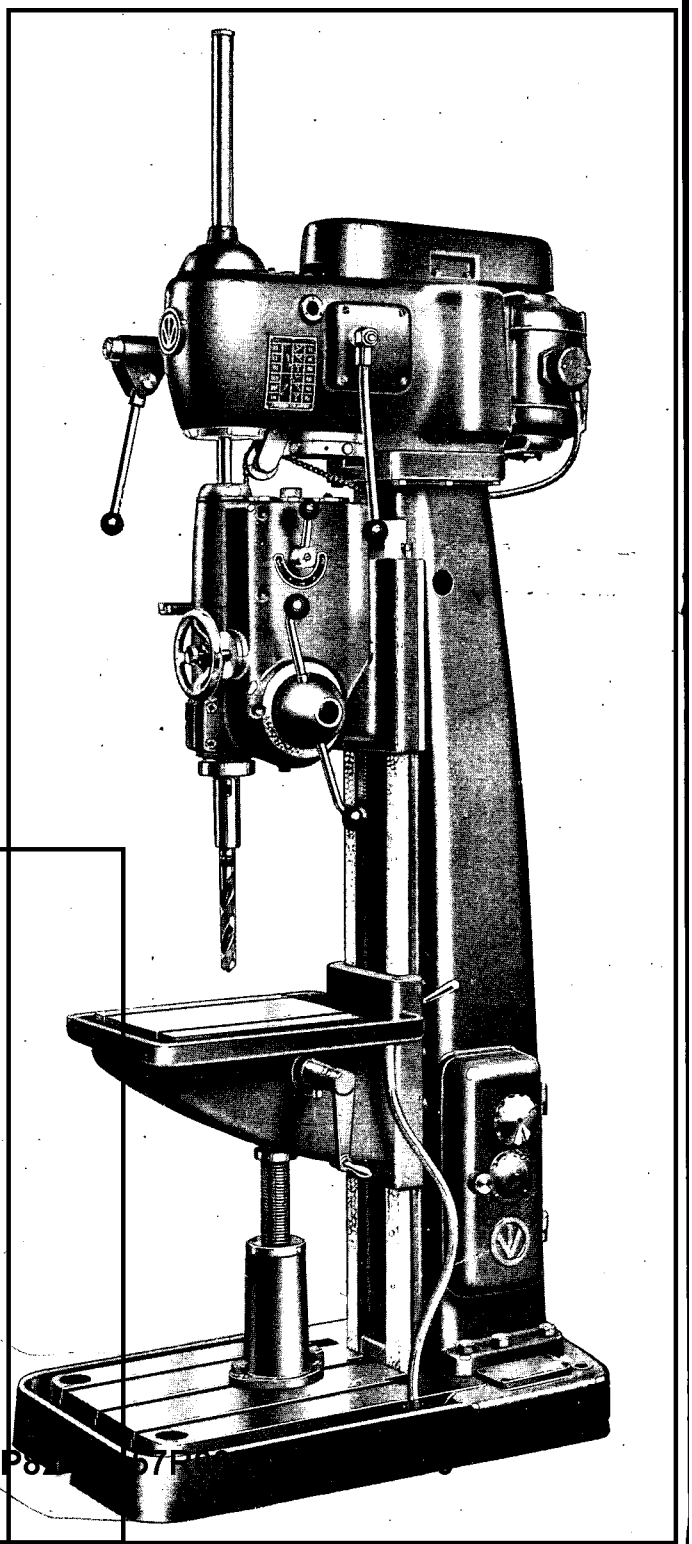

Modèle V-30.

Approved For Release 1999/09/09 : CIA-RDP82-00457R005200230012-0

DRILLING MACHINES

CPYRGHT

Models

V20, VS20, VS32

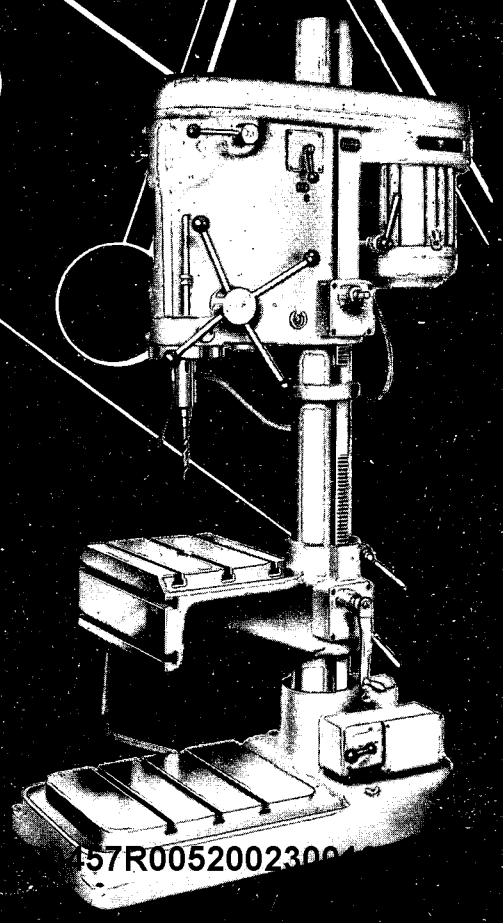

TOS

457R005200230

Approved For Release 1999/09/09 : CIA-RDP82-00457R005200230012-0

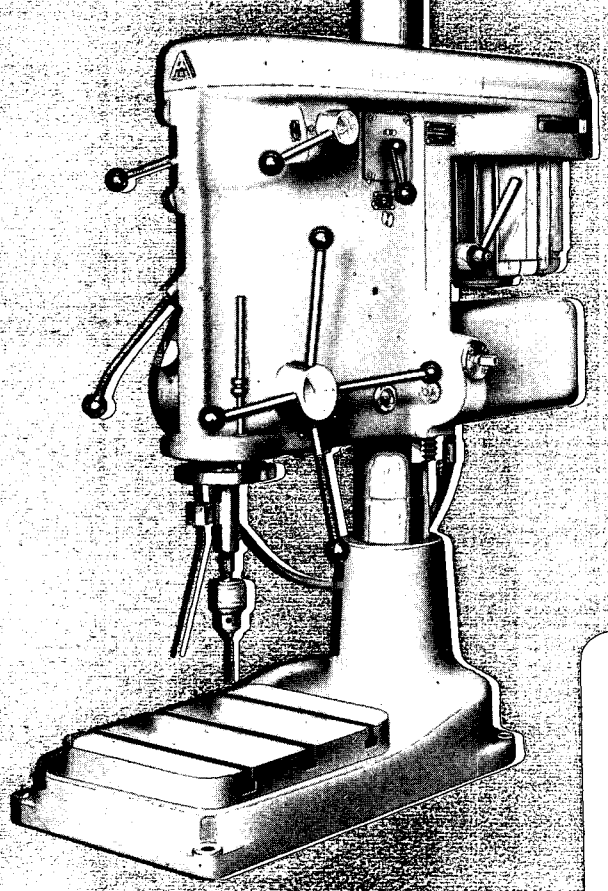

25X1X

[redacted]

BENCH DRILL MODEL V 20

The motor output of 2.2 HP, torque on the spindle of 400 kgcm and axial thrust of 400 kg correspond to the values of drilling with a high-speed steel drill up to the diameter of 20 mm in alloy steel of 100 kg/mm^2 tensile strength.

Nine spindle speeds in geometric progression from 71 to 2800 R. p. M. with the coefficient of 1.6 enable economical drilling and reaming of holes of 5-20,0 mm in diameter in all commonly used materials and are arranged in two speed ranges:

Speed range I: from 71-710 R. p. M. for reaming and tapping.

Speed range II: from 280-2800 R. p. M. for drilling.

DRILLING MACHINES

MODELS

V20, VS20, VS32

CPYRGHT

By their ingenious design, rugged construction, high efficiency and wide spindle speed and feed range these machines meet the demand of a modern drilling, reaming and tapping practice in all commonly used materials. A number of attachments and accessories is provided to speed up the production and improve the quality of the product.

Approved For Release 1999/09/09 : CIA-RDP82-00457R005200230012-0

The machines are equally at home in large and small shops both with quantity and single part production.

CPYRGHT

Approved For Release 1999/09/09 : CIA-RDP82-00457R005200230012-0

V20

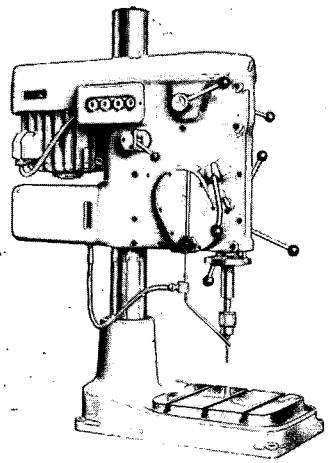

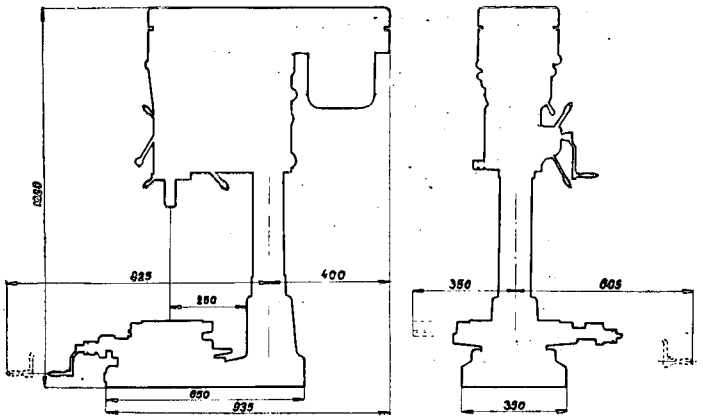

VS20

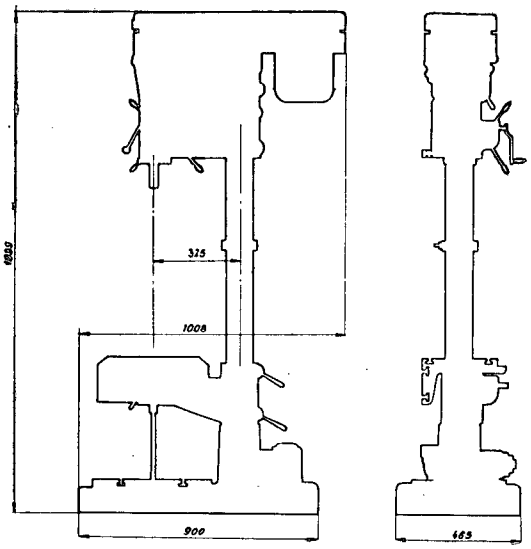

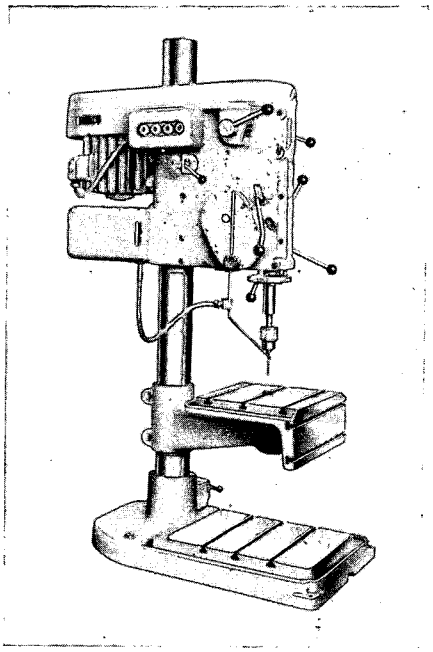

VS32

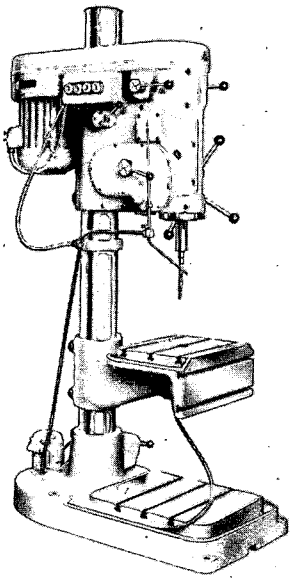

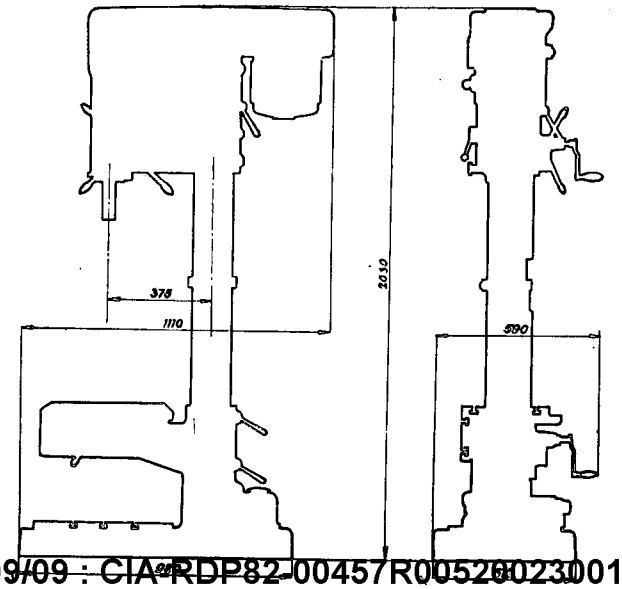

Approved For Release 1999/09/09 : CIA-RDP82-00457R005200230012-0

CPYRGHT
Approved For Release 1999/09/09 : CIA-RDP82-00457R005200230012-0

COLUMN DRILL MODEL VS 32

The motor output of 3 HP, torque on the spindle of 800 kgcm, and axial thrust of 800 kg correspond to the values of drilling with a high-speed steel drill up to the diameter of 32 mm in alloy steel of 100 kg/mm^2 tensile strength.

Nine spindle speeds in geometric progression from 56 to 2240 R.p.M. with the coefficient of 1,6 enable economical drilling and reaming of holes of 10-32 mm in diameteter in all commonly used materials, and are arranged in two speed ranges: Speed range I: from 56-560 R.p.M. for reaming and tapping. Speed range II.: from 224-2240 R. p. M. for drilling.

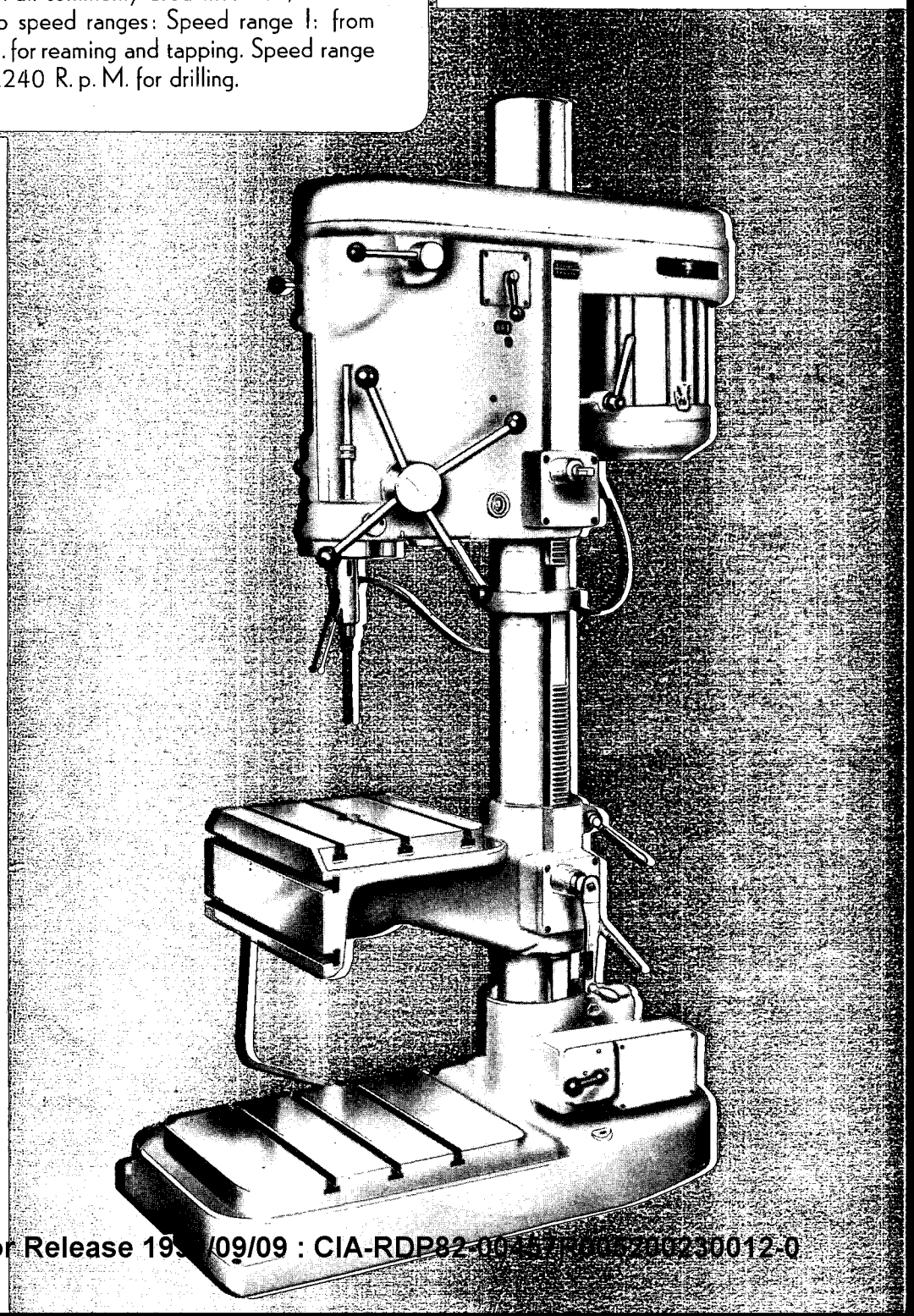

Approved For Release 19[illegible]/09/09 : CIA-RDP82-00457R005200230012-0

CPYRGHT Approved For Release 1999/09/09 : CIA-RDP82-00457R005200230012-0

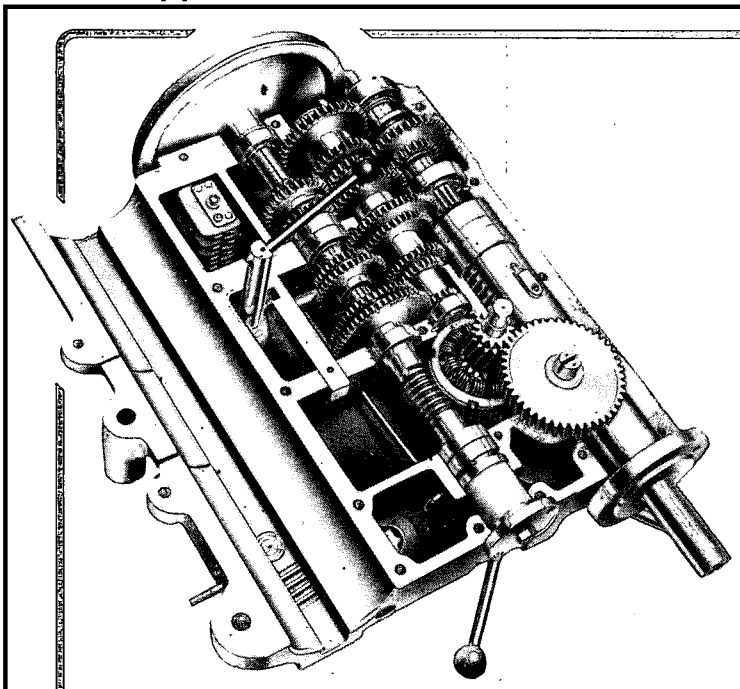

THE HEADSTOCK is vertically adjustable and can be swung on the column. The gearbox mechanism is driven by means of a V-belt from the electric motor, with the provision of belt-tension. The electric motor is started by the reversing switch lever.

The machines provide two spindle speed ranges easily changed by shifting the belt on the two-step cone pulleys after removing the top cover of the headstock. The individual spindle speeds are changed by two handlevers. The power feeds are changed by a handlever and engaged or disengaged by the friction clutch lever which also automatically releases the feed when the maximum thrust is exceeded. This occurs at 400 kg with the machines V 20 and VS 20 and at 800 kg with the type VS 32 when the tool becomes dull or at the tool breakage, or normally when striking against the adjusted trip dog. The drilling depth is adjustable on a scale graduated in millimeters. The spindle runs in ball bearings. A spiral spring returns the spindle to its upper position.

Circulation system lubrication for the headstock is provided, the oil being supplied by a geared pump inside the headstock unit. The end of the spindle sleeve is fitted with a standard flange to receive a multi-spindle drill head for mass production.

THE TABLE is of the angular type, having horizontal and vertical working surfaces and thus enabling longshaped parts to be clamped and drilled in the direction of their longitudinal axes. It is hinged on a bracket which is vertically adjustable and may be swung on the column.

THE COOLING SYSTEM: Liberal supply of coolant is provided by a geared pump from the coolant tank inside the base. With the bench machines the coolant tank is attached to the headstock unit.

MACHINE TYPES: The machines are produced as bench drills (V 20) or column drills (VS 20). The machines V 32 are supplied as column drills only. All these types can be supplied as multi-spindle gang drills (built with 2, 3, 4 or 6 head units on a common base).

MULTI-SPINDLE GANG DRILLS. These machines are adapted for quantity production and in many cases they can replace special semi-automatic drilling machines. They are supplied fitted with special equipment such as: multi-spindle drill heads, automatic reverse in tapping, automatic release and return of spindle sleeve to its upper position. The head units are mounted on a common bench base. Central cooling system and ample chip clearance are provided.

STANDARD EQUIPMENT: Electric motor 220/380 volts, V-belt, cooling attachment (the column machines having self-contained electric pump), crank for lifting the headstock and table, ejector.

OPTIONAL EQUIPMENT: Compound table, drill head No. 1 for types V 20 and VS 20, drill head No. 2 for type VS 32, spot light.

IN ORDERING, SPECIFY VOLTAGE, PHASE AND FREQUENCY OF POWER SUPPLY!

Approved For Release 1999/09/09 : CIA-RDP82-00457R005200230012-0

CPYRGHT Approved For Release 1999/09/09 : CIA-RDP82-00457R005200230012-0
RESTRICTED CONFIDENTIAL

SPECIFICATIONS:

		Bench drilling machine Model V 20	Column drilling machines Model VS 20, VS 32	
Drilling diameter	mm	20	20	32
	in.	3/4	3/4	1 1/4
Drilling depth	mm	160	160	200
	in.	6 1/4	6 1/4	7 7/8
Bore of spindle	mm	17	17	22
	in.	11/16	11/16	27/32
Taper in spindle	Morse	3	3	4
Working surface of bench base	mm	280 x 355	355 x 450	400 x 500
	in.	11x14	14x17 3/4	15 3/4x19 5/8
Working surface of angular table	mm	280 x 350—175 x 418	316 x 400 — 200 x 480	
	in.	11x13 3/4—6 3/4x16 1/2	12 1/2x15 3/4 — 7 3/4x19	
Distance, spindle nose to working surface of base: maximum	mm	500	1120	1120
	in.	19 3/4	44	44
minimum	mm	160	780	770
	in.	6 1/4	30 3/4	30
Distance, spindle nose to working surface of angular table: maximum	mm		643	674
	in.		25 1/4	26 1/2
minimum	mm		0	0
	in.		0	0
Distance, centerline of spindle to column	mm	250	250	280
	in.	9 3/4	9 3/4	11
Vertical adjustment of headstock	mm	340	340	350
	in.	13 3/8	13 3/8	13 3/4
Vertical adjustment of bracket with angular table	mm		410	433
	in.		16 1/8	17
Spindle speeds: Number		9	9	9
Range	R.p.M	71—2800	71—2800	56—2240
Maximum torque on spindle	kgcm	400	400	800
	lb.ft.	350	350	700
Feeds: Number		4	4	4
Range	mm/rev.	0,08—0,32	0,08—0,32	0,11—0,45
	in.per rev.	0,003-0,0126	0,003-0,0126	0,0043-0,0178
Maximum axial thrust on spindle	kg	400	400	800
	lbs	885	885	1770
Electric motor: Speed	R.p.M.	1400	1400	1400
output	HP	2,2	2,2	3
Floor space required	mm	350 x 940	350 x 940	510 x 1100
	in.	14 x 37	14 x 37	20 x 43
Weight of machine: with standard equipment	kg	350	450	600
	lbs.	770	1000	1320
with packing	kg	385	390	650
	lbs.	850	860	1430
with seaworthy packing	kg	400	410	680
	lbs.	880	900	1500
Contents boxed	m^3			
	cu. ft.			

As improvements in design are continually being made, this specification is not to be regarded as binding in detail and dimensions are subject to alteration without notice.

KOVO LIMITED METAL & ENGINEERING PRODUCTS AND RAW MATERIALS TRADING COMPANY -- DIVISION II. PRAGUE, IV, NÁCHODSKÁ NAM. 33

25X1X

Approved For Release 1999/09/09 : CIA-RDP82-00457R005200230012-0
CONFIDENTIAL

Approved For Release 1999/09/09 : CIA-RDP82-00457R005200230012-0

RESTRICTED

MILLING MACHINES

CPYRGHT

CONFIDENTIAL

25X1X

ZBROJOVKA

Group

N.V. HANDEL MIJ. DE
VERTEGENWOORDIGING
TSJECHOSLOVAAKSE
INDUSTRIE
RIJSWIJK 18A
DJAKARTA

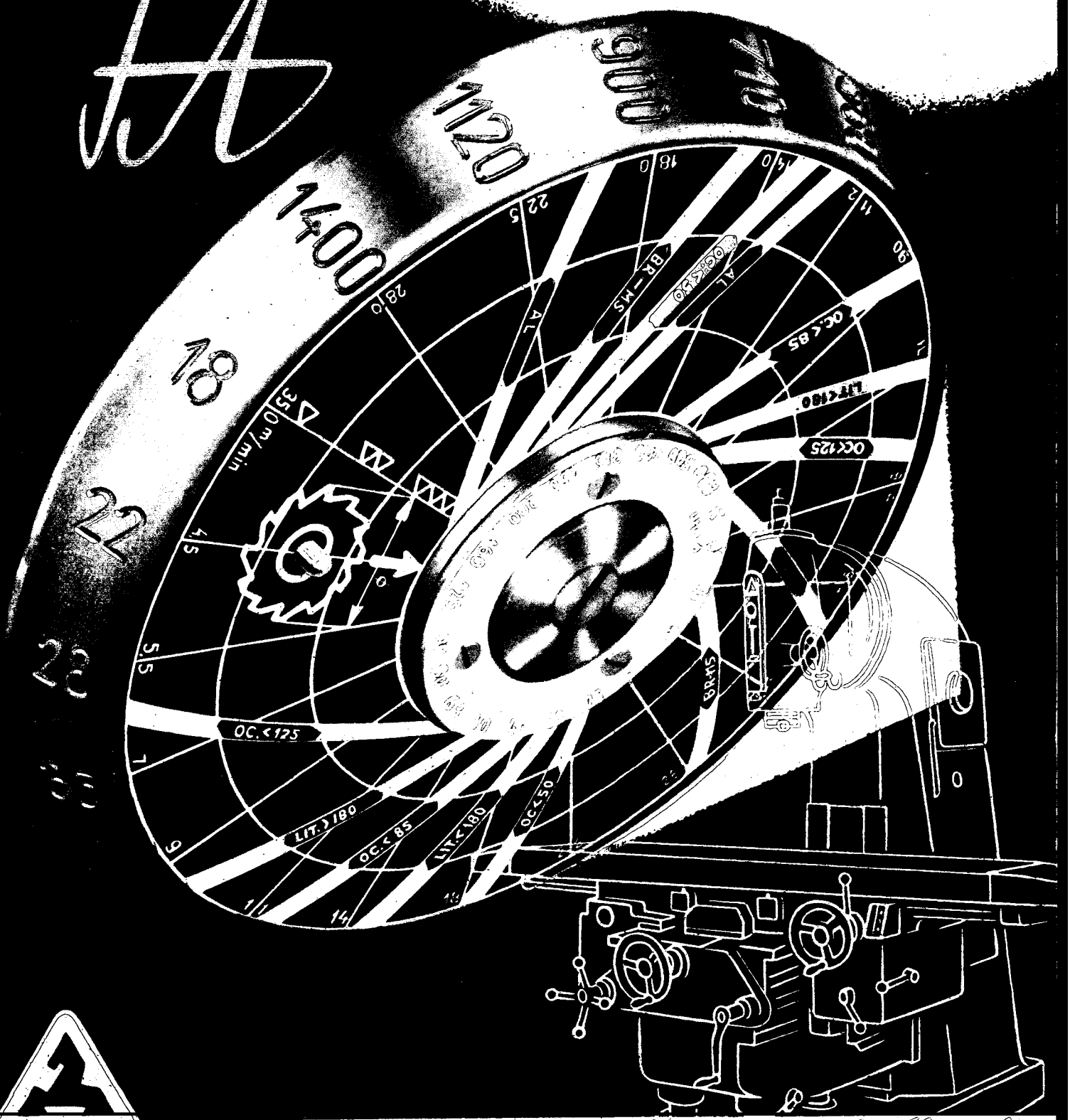

Approved For Release 1999/09/09 : CIA-RDP82-00457R005200230012-0

UNITED MACHINE TOOL FACTORIES

Approved For Release 1999/09/09 : CIA-RDP82-00457R005200230012-0

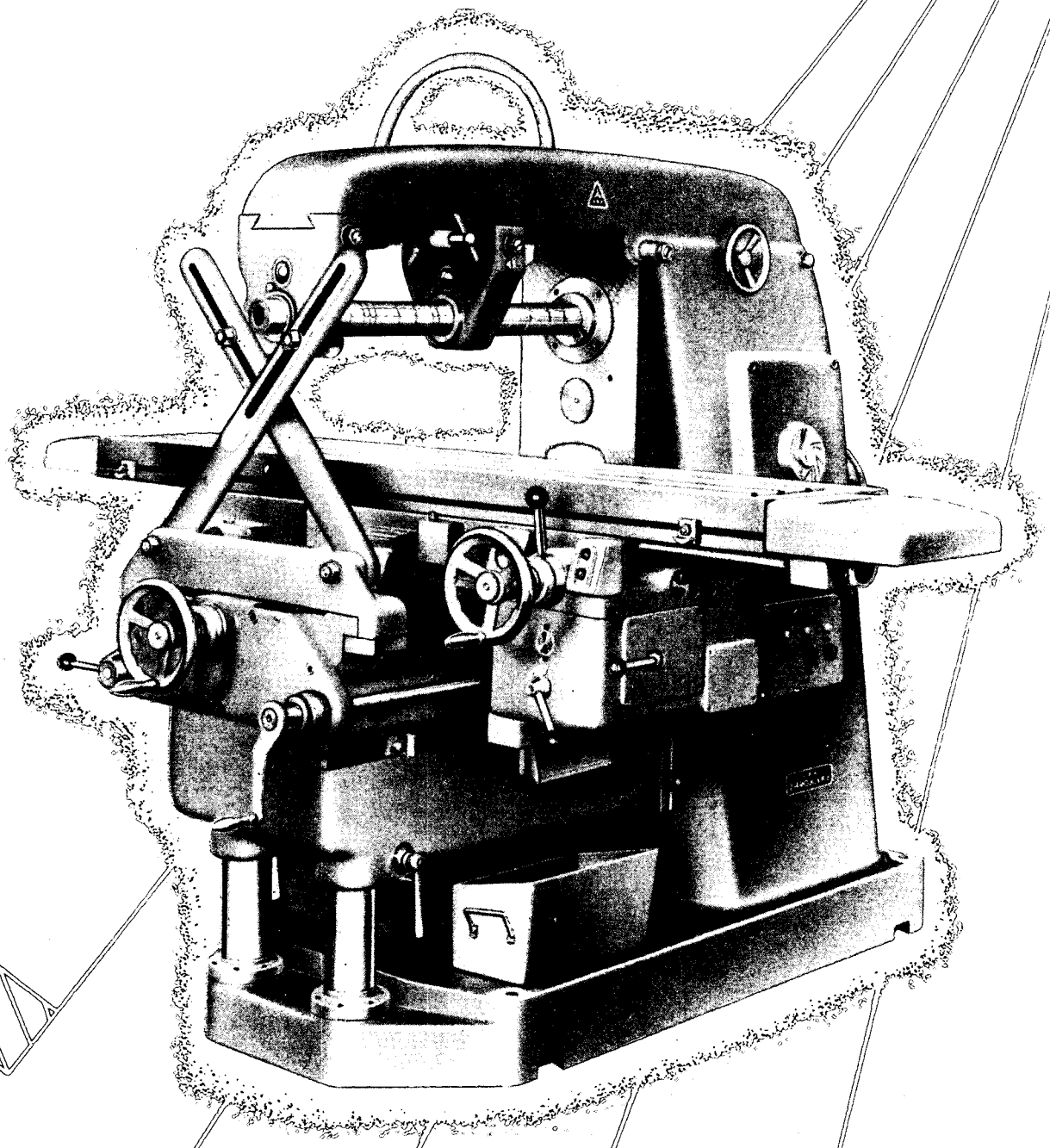

Economical production of perfect and precision machine parts is stipulated by machine tools coming up by their qualities to the requirements of modern development in machining of metals.

This requirement is fulfilled in milling by milling machines of the group FA of latest design, representing by their technical performance and workmanship a remarkable progress in the development of this class of machines.

Approved For Release 1999/09/09 : CIA-RDP82-00457R005200230012-0

CPYRGHT

25X1X

Approved For Release 1999/09/09 : CIA-RDP82-00457R005200230012-0

[redacted]

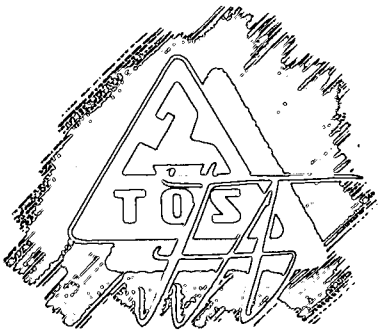

The milling machines of the group FA are produced in horizontal „H", vertical „V", and universal „U" types in four sizes. The same conception of the principal points of all types and sizes served as the basis for the design of machines, the outstanding features of which are as follows:

1. **High efficiency**
2. **Versatility**
3. **Constant accuracy**
4. **Ease of operation**
5. **Reliability in service**

THESE RESULTS WERE ACHIEVED BY:

Especially rigid construction of the column and knee, with the machines FA 5 reinforced in addition by cylindrical supports.

Wide range of spindle speeds and power feeds of table with their high upper value.

Especially rapid table travel.

Individual spindle and feed drive.

Centralised and simplified controls.

Simplified construction, selection of high-grade material and precision workmanship of all parts of the driving mechanism.

Developement of the calculator of cutting speeds.

Electrically controlled disengaging of feeds.

Precision adjustment of spindle, with vertical machines by means of calibric cubes or on a dial indicator.

Automatic change of spindle speeds.

Approved For Release 1999/09/09 : CIA-RDP82-00457R005200230012-0

Automatic engaging of feeds and power longitudinal feeds.

Approved For Release 1999/09/09 : CIA-RDP82-00457R005200230012-0

Spindle

Speed change

With the machines type *FA* 5 and *FA* 4 the spindle speed change is effected by a single lever and with the machines *FA* 2 and *FA* 3 by two levers on the gear box located at the right of the column.
Wide spindle speed range permits economical machining of all classes of material from high tensile steels to light metals.
The spindle speed change can be made in the following ranges:

FA 2	Standard range	63		90		125		180		250		355		500		710		1000		1400		2000		2800
	Increased range	90		125		180		250		355		500		710		1000		1400		2000		2800		4000
FA 3	Standard range	45		63		90		125		180		250		355		500		710		1000		1400		2000
	Increased range	63		90		125		180		250		355		500		710		1000		1400		2000		2800
FA 4	Standard range	32		45		63		90		125		180		250		355		500		710		1000		1400
	Increased range	45		63		90		125		180		250		355		500		710		1000		1400		2000
FA 5	Standard range	18	22	28	35	45	56	71	90	112	140	180	224	280	355	450	560	710	900	1120	1400			

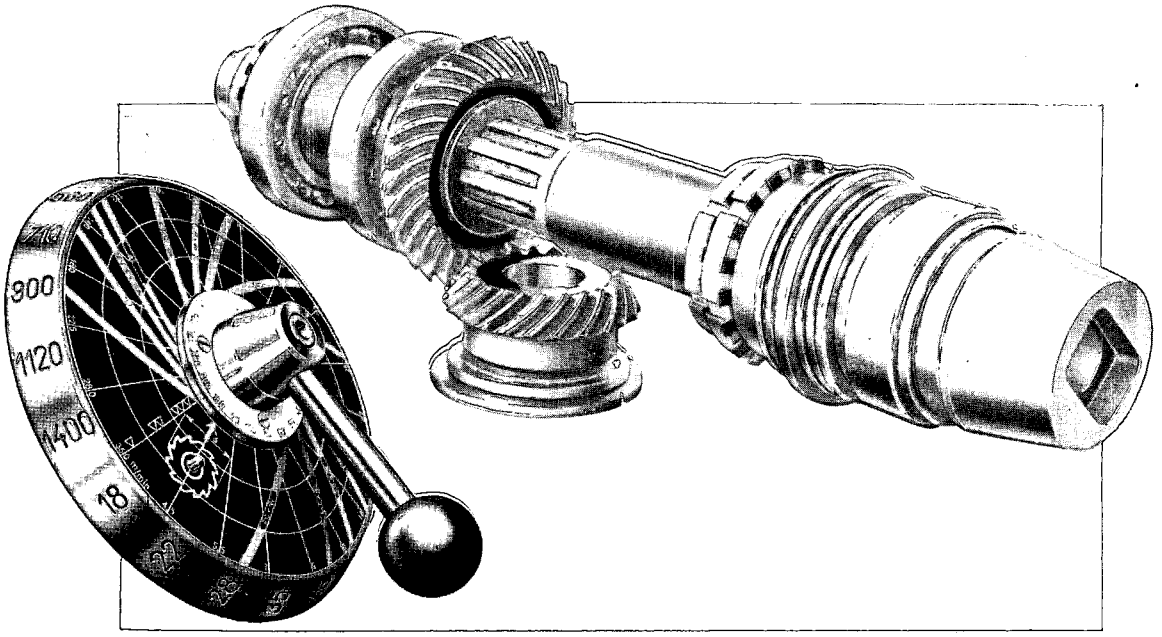

Calculator

The calculator placed on the front of the dial is a useful means for selecting the proper spindle speeds. According to the fundamental cutting conditions given by the class of the machined material, material of the tool, diameter of the tool and the required degree of finish of the machined workpiece the most convenient spindle speed may be selected.

Spindle Drive

The spindle drive is transmitted from the flange motor bolted to the rear of the column. Starting of the motor and thereby the spindle is by pushbutton. A second pushbutton serves for braking and stopping the motor.

The spindle is mounted at its front end in a precision double-row roller bearing with taper bore which enables a very fine adjustment of play in the bearing. Also the unusual accuracy of the other spindle bearings is a proof of the extraordinary [illegible] of the spindle.

Approved For Release 1999/09/09 : CIA-RDP82-00457R005200230012-0

CPYRGHT Approved For Release 1999/09/09 : CIA-RDP82-00457R005200230012-0

Approved For Release 1999/09/09 : CIA-RDP82-00457R005200230012-0

Feeds

CPYRGHT

Speeds

The speeds of power feeds in longitudinal and cross direction decreased to $^1/_4$ in

FA 2	14	20	28	40	56	80	112	160	224	315	450	630	900	—	—
FA 3	14	20	28	40	56	80	112	160	224	315	450	630	900	—	—
FA 4	10	14	20	28	40	56	80	112	160	224	315	450	630	900	1250
FA 5	10	14	20	28	40	56	80	112	160	224	315	450	630	900	1250

vertical direction, meet by their wide range the exacting requirements demanded by the universal utilisation of the machine.

Rapid traverse

The machines are fitted with rapid traverse in all directions. Only with the machines *FA* 2 the working feed and rapid traverse are in the longitudinal only. Easy engaging of the rapid traverse and their instantaneous and precision changing to working feeds is permitted by a multiple-disc clutch of new design, provided in the transmitting mechanism.

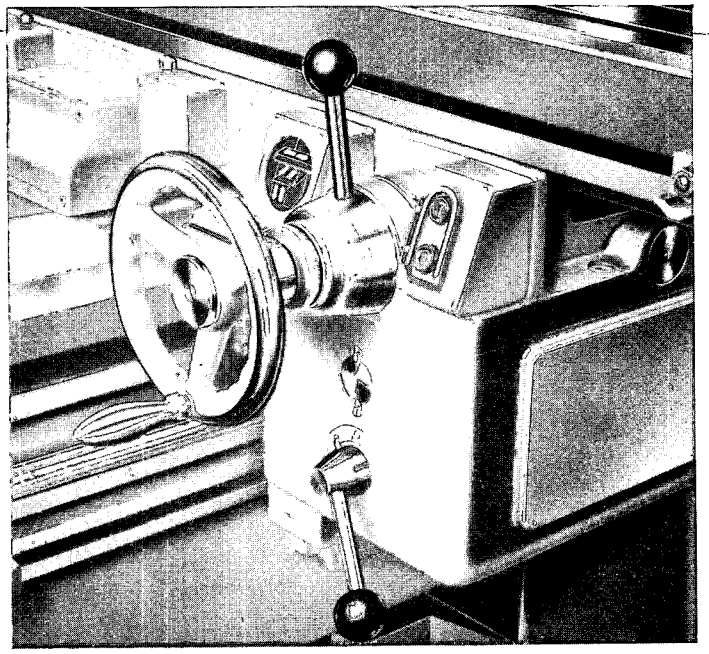

Selection of feeds

Engaging of working feeds and rapid traverse as well as their reversing is accomplished by the control lever on the right-hand side of the cross slide; this is done in the direction set by another, lower positioned lever. In addition, the set feed direction is demonstrated also optically by two illuminated arrows on the controlling device located on the left side of the main control lever.

Disengaging of automatic feed and rapid traverse in any direction may be set by adjusting the stops which stop the feed motor by means of electric switches. This way of disengaging is more accurate than the mechanical way.

Approved For Release 1999/09/09 : CIA-RDP82-00457R005200230012-0

CPYRGHT
25X1X
Approved For Release 1999/09/09 : CIA-RDP82-00457R005200230012-0

[redacted]

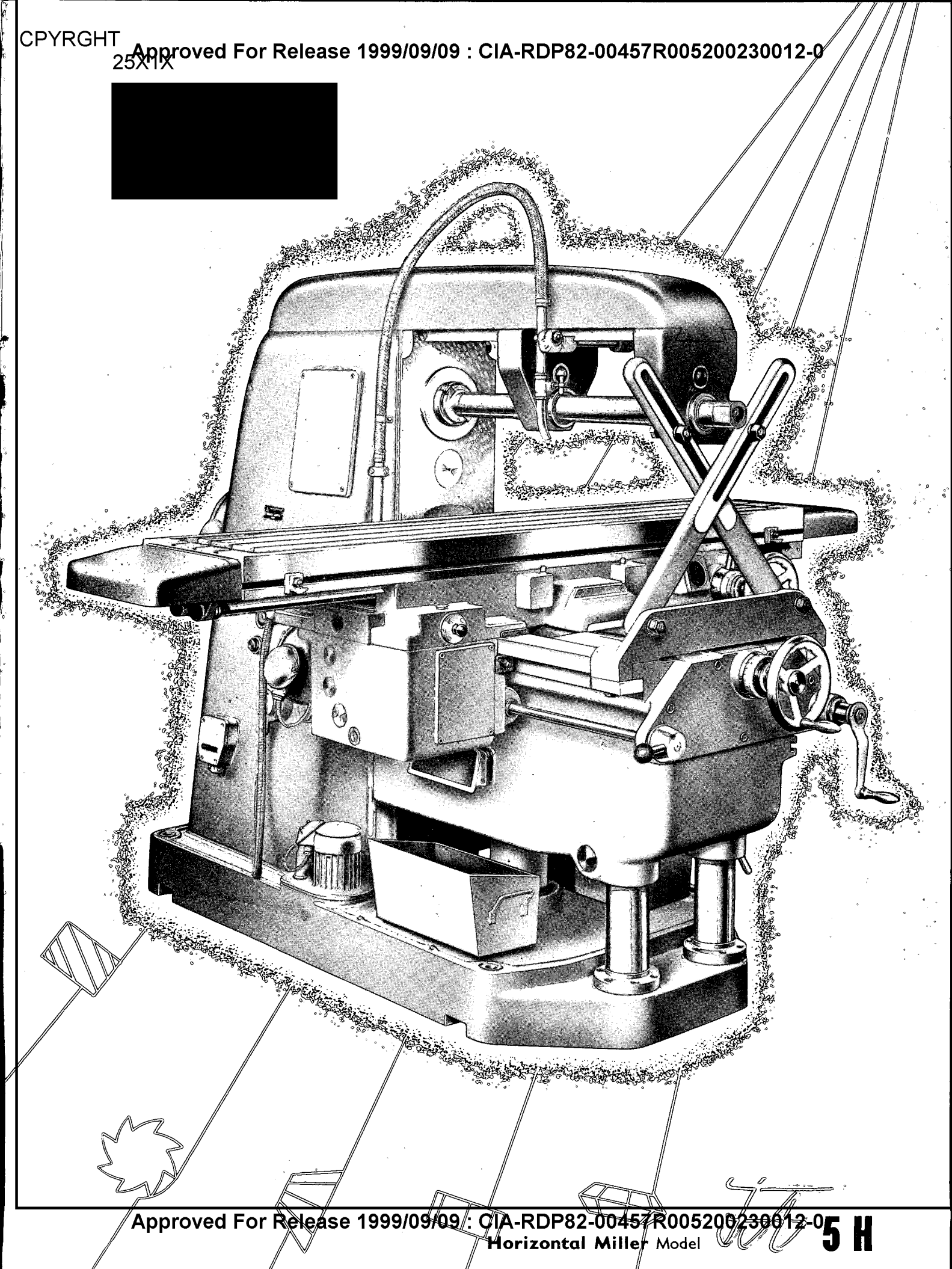

Approved For Release 1999/09/09 : CIA-RDP82-00457R005200230012-0

Horizontal Miller Model **5 H**

Approved For Release 1999/09/09 : CIA-RDP82-00457R005200230012-0

25X1X

CPYRGHT

Approved For Release 1999/09/09 : CIA-RDP82-00457R005200230012-0

Vertical Miller Model **5 V**

CPYRGHT Approved For Release 1999/09/09 : CIA-RDP82-00457R005200230012-0

Cooling

The coolant is supplied to the work from the container in the base of the column by means of an electric pump placed at the left of the column. The used coolant and the chips are drained through broad channels from the table surface and the cross slide into the wide space of the knee, from where the coolant is drained into 2 vessels at either side of the knee. In these vessels the coolant is filtered and then it flows into the container in the base where it is cleaned by weirs.

Special execution

On request the machines can be supplied with special arrangements for obtaining especially high outputs, either by the way of machining or by further mechanising of operations.

Negative rake milling attachment

The good results obtained by studies and testing of milling with negative rake on the machines FA 5 have led to a special arrangement of the spindle of these machines. This enables attaching of the fly wheel and tool head, and the machines so arranged may be supplied either with ISA or with metric taper.

Attachment for automatic feed selection

The attachment for automatic feed selection is particulary advantageous in mass production. The milling operation controlled by electric stops may consist of some longitudinal work feeds and rapid traverse in both directions. The drawing shows an application of this attachment for machining 3 equal work pieces uniformly clamped, at the same time, where the paths marked:

a = rapid traverses into the cut
b = working feeds
c = rapid return traverse.

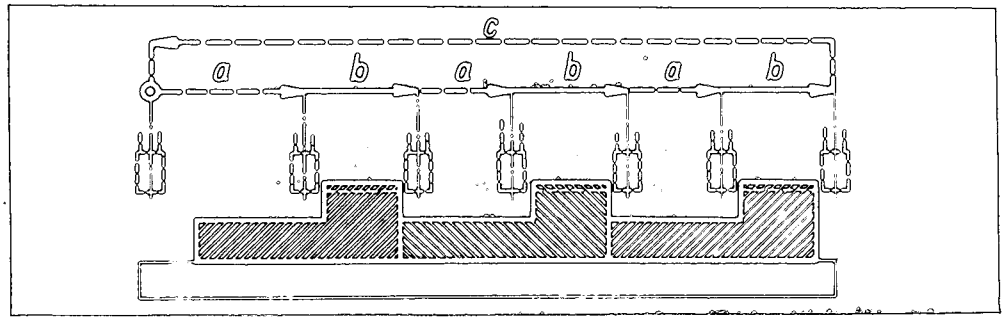

In ordering, kindly specify the ratio of changes of rapid traverse to the working feed. The machines FA 4 and FA 5 can be supplied with automatic feed selection. The spindle speeds are increased or decreased by an individual electric motor controlled by a lever on the right-hand side of the feed box.
The above mentioned attachments are furnished at an extra charge and it is necessary to specify them, when ordering.

Taper in spindle

The machines are normally fitted with a spindle with ISA taper. On request, however they can be also delivered with metric taper without extra charge, as mentioned in paragraph „SPECIFICATIONS".
Quotations on motors of a greater output power and further possible arrangements of machines will be submitted on request.

Approved For Release 1999/09/09 : CIA-RDP82-00457R005200230012-0

Approved For Release 1999/09/09 : CIA-RDP82-00457R005200230012-0

CPYRGHT

N.V. HANDEL MIJ. v/h
VERTEGENWOORDIGING
TSJECHOSLOVAAKSE
INDUSTRIE
RIJSWIJK 18A
DJAKARTA

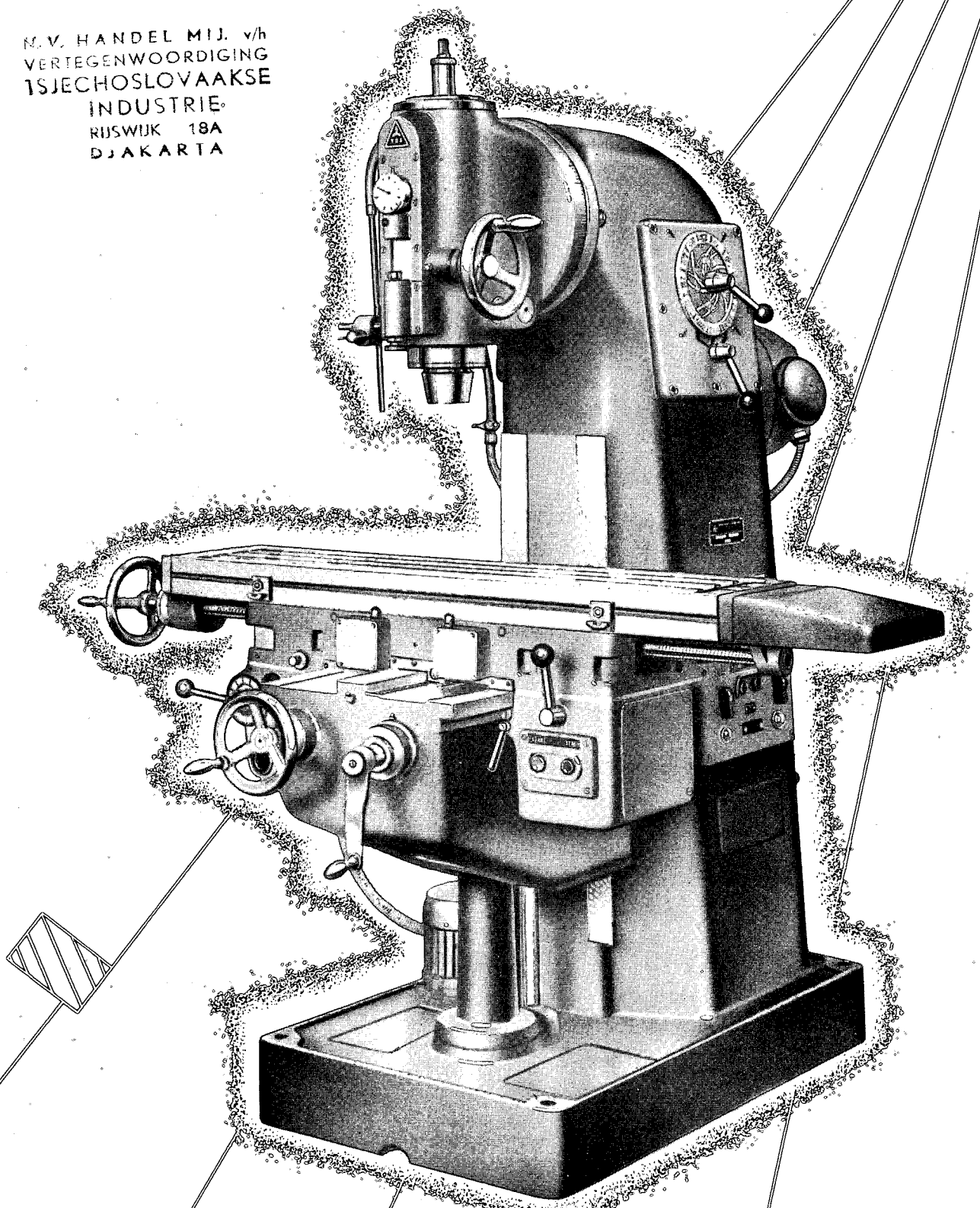

Approved For Release 1999/09/09 : CIA-RDP82-00457R005200230012-0

Vertical Miller Model **2 V**

CPYRGHTApproved For Release 1999/09/09 : CIA-RDP82-00457R005200230012-0

Controls of Main Element

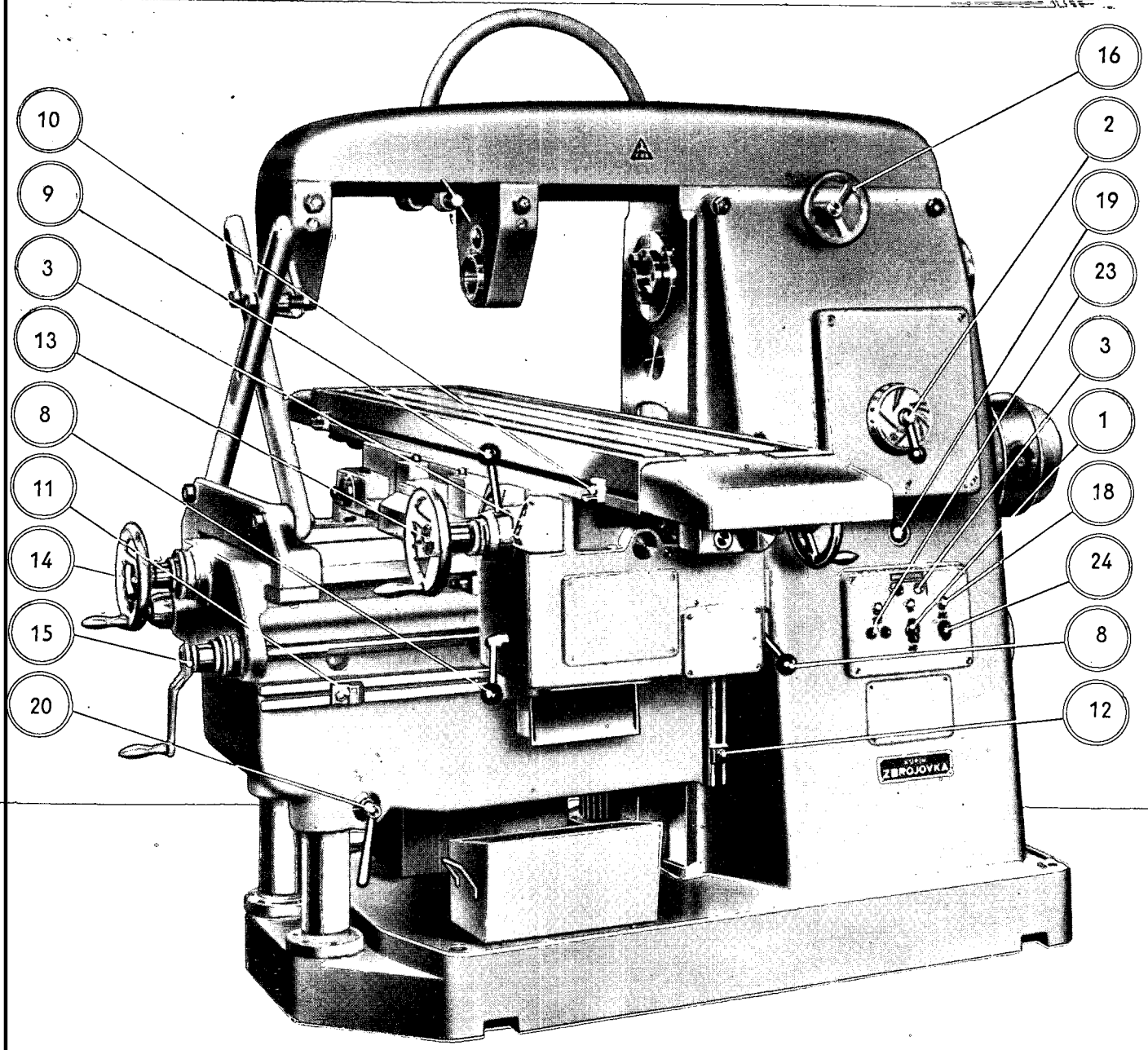

Horizontal Miller FA 5 H

1. Master switch with pilot bulb and switch for reversing the spindle rotation.
2. Spindle speed control lever.
3. Pushbuttons for starting, stopping and braking the spindle.
4. Handwheel for vertical travel of spindle.
5. Stop for vertical adjustment of spindle.
6. Indicator.
7. Lever for selection of power feed speeds.
8. Lever of the directional selector of power feed and rapid traverse with controlling device.
9. Lever for engaging and reversing of feeds and rapid traverse.
10. Stops for longitudinal feed.
11. Stops for cross feed.
12. Stops for vertical feed.

Approved For Release 1999/09/09 : CIA-RDP82-00457R005200230012-0

CPYRGHT
Approved For Release 1999/09/09 : CIA-RDP82-00457R005200230012-0

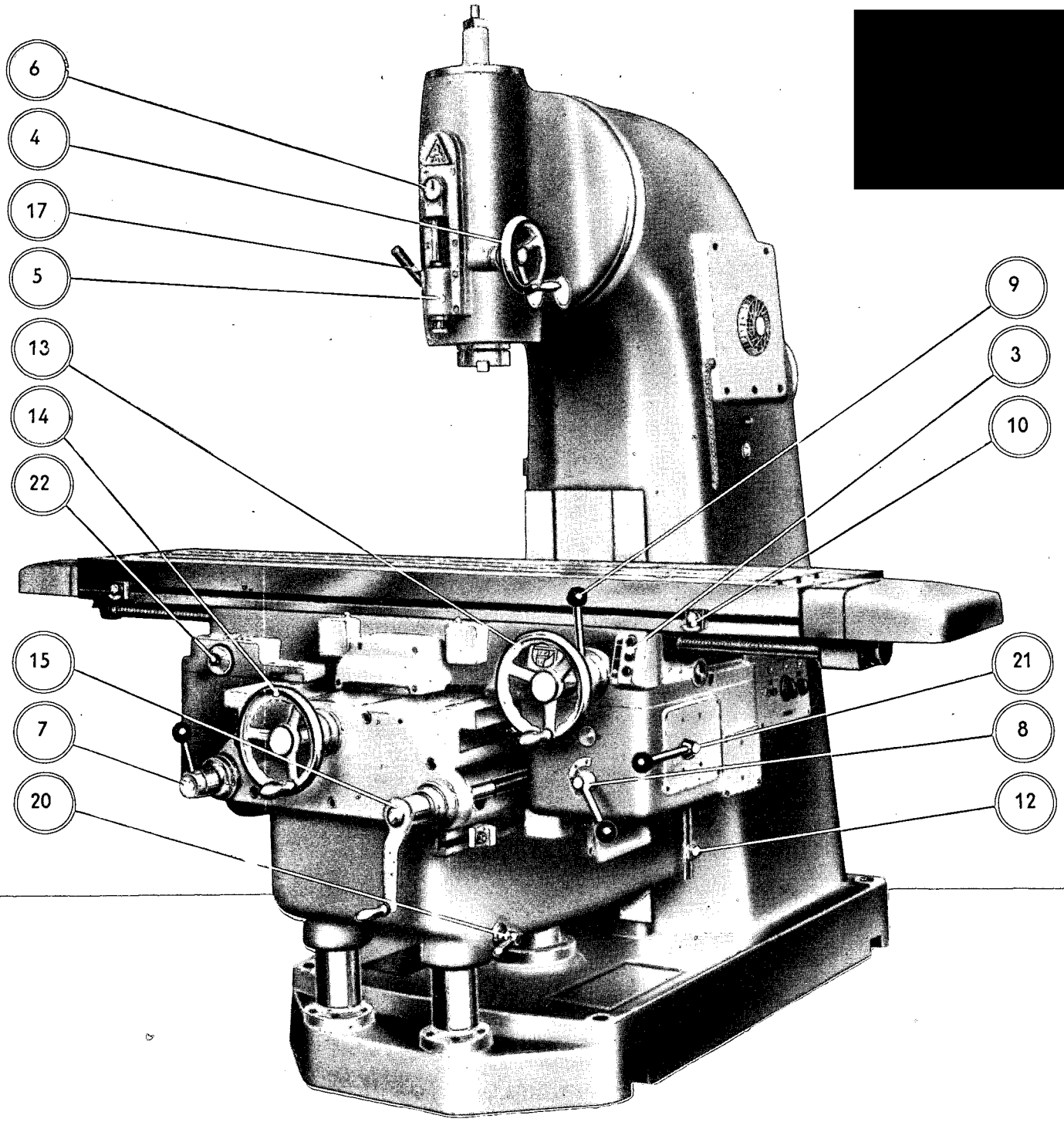

13. Hand wheel for longitudinal travel.
14. Hand wheel for cross travel.
15. Hand wheel for vertical travel.
16. Hand wheel for adjustment of overarm.
17. Handle for securing the spindle in desired position.
18. Pilot bulb of electric oilpump for oiling the parts inside the column.
19. Oil flow indicator for parts inside the column.
20. Handle for securing the knee in vertical position.
21. Handle for automatic selection of spindle speeds.
22. Oil distributor for lubrication of cross and longitudinal table.
23. Switch of the electric coolant pump with pilot bulb.
24. Switch of spot light.

Vertical Miller FA 5 V

Approved For Release 1999/09/09 : CIA-RDP82-00457R005200230012-0

Approved For Release 1999/09/09 : CIA-RDP82-00457R005200230012-0
CPYRGHT

Special Equipment

Dividing heads

The following equipment may be supplied on request:
Universal dividing heads for direct, indirect and differential indexing, and for milling spirals with power feed.

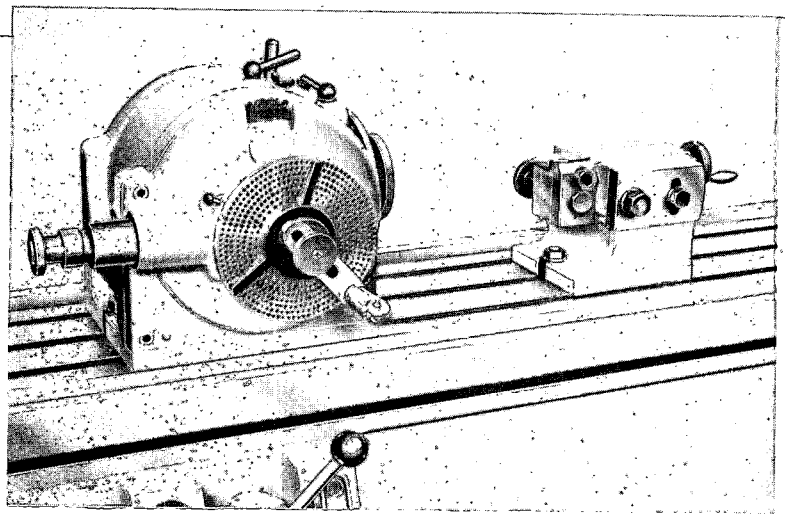

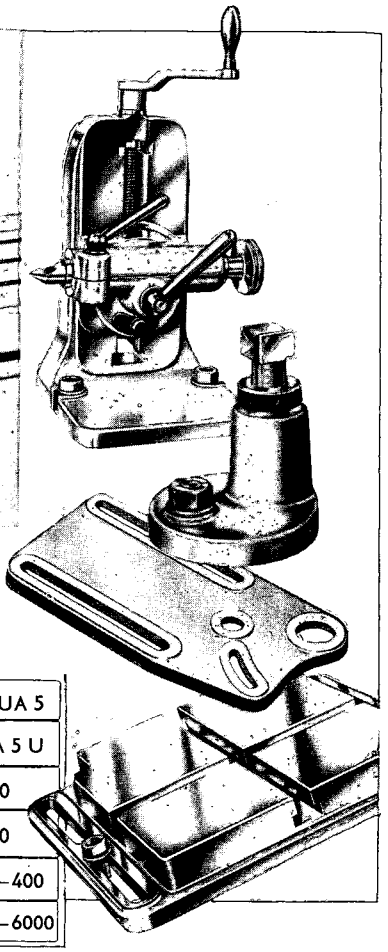

TYPE	DUA 2	DUA 3	DUA 4	DUA 5
For the machine	FA 2 U	FA 3 U	FA 4 U	FA 5 U
Height of centres . . . . . mm	100	125	150	180
Maximum length to be clamped mm	300	600	725	1000
Indexing range . . . . . mm	2—400	2—400	2—400	2—400
Pitch range . . . . . mm	20—6000	20—6000	20—6000	20—6000

Optional equipment for the universal dividing head: Vertically adjustable tailstock, cross plate, support for milling long workpieces, quadrant for milling threads of a small pitch.

Circular tables

For circular milling jobs with hand and automatic feed.

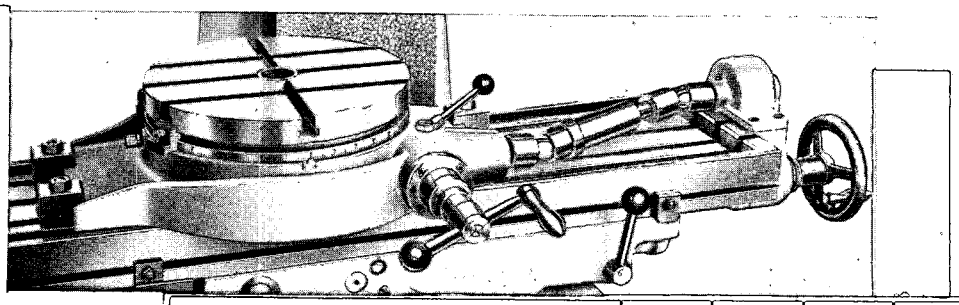

TYPE	SRA 2	SMA 3	SMA 4	SMA 5
For the machine	FA 2	FA 3	FA 4	FA 5
Diameter of working surface . . . mm	250	315	400	500
Number × width of T-slots . . . . mm	3×14	4×14	4×18	4×20
Height of circular table . . . . . mm	130	140	165	185

The circular table SRA 2 is fitted with hand feed only.

Approved For Release 1999/09/09 : CIA-RDP82-00457R005200230012-0

CPYRGHT Approved For Release 1999/09/09 : CIA-RDP82-00457R005200230012-0

Vertical milling attachment

Vertical milling attachment with rotary spindle in the plane perpendicular to the axis of machine spindle permits doing many jobs on horizontal and universal machines for which purpose vertical millers would otherwise be necessary.

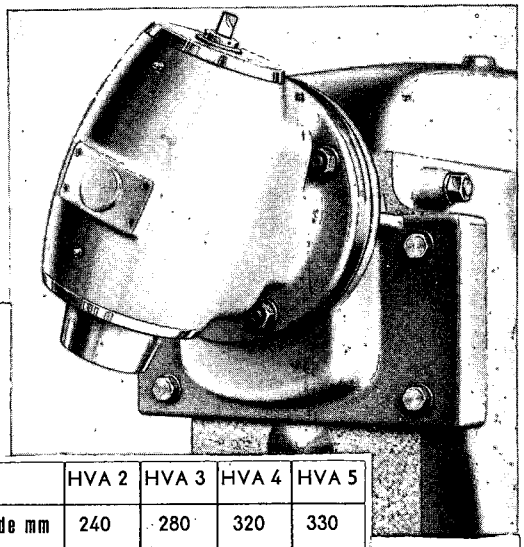

25X1X

[redacted]

Model	HVA 2	HVA 3	HVA 4	HVA 5
Distance, centreline of spindle to the column guide mm	240	280	320	330
Taper in spindle: Standard . . . . . ISA	32	44	44	70
On request metric . . . . . No.	24	32	40	50

Universal milling attachment

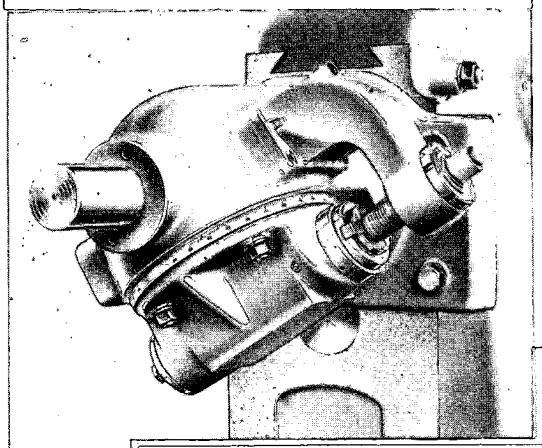

Universal milling attachments are equipped with a spindle adjustable in any direction and destined for machining uneasily accessible surfaces, particularly bevel surfaces and in cases where the spindle axis must be parallel to the longitudinal table feed, for example in rack milling.

Model	HUA 2	HUA 3	HUA 4	HUA 5
Taper in spindle: Standard . . . . . ISA	32	32	44	44
On request metric . . . . . No.	24	24	32	32

Rack indexing attachment

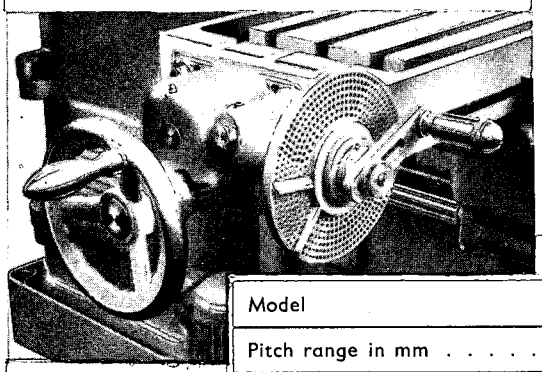

Rack indexing attachments used in connection with universal milling attachment form the rack milling attachment.

Model	PDA 2	PDA 3	PDA 4	PDA 5
Pitch range in mm	1—38	1—38	1—38	1—38
Pitch range in inches	1/8"-2"	1/8"-2"	1/8"-2"	1/8"-2"
Modul pitch range (3,14)	1—15	1—15	1—15	1—15

In addition to the above mentioned attachments we also cans upply other precision machine vices of swivel and circular types, milling arbours of various diameters and lengths, collets, reducing sleeves and other attachments as per special catalogues and price lists.

Approved For Release 1999/09/09 : CIA-RDP82-00457R005200230012-0

CPYRGHT

Approved For Release 1999/09/09 : CIA-RDP82-00457R005200230012-0

SPECIFICATIONS - HORIZONTAL MILLERS

		FA 2 H	FA 3 H	FA 4 H	FA 5 H
Working surface of table: width	mm	200	250	315	425
length	mm	1000	1250	1600	2000
Number of table T-slots		3	3	3	3
Width × distance between T-slots	mm	14×42	14×55	18×70	20×90
Longitudinal travel of table: by hand	mm	640	810	1010	1410
automatic	mm	630	800	1000	1400
Cross travel of table: by hand	mm	225	280	365	450
automatic	mm	—	275	355	440
Vertical travel of table: by hand	mm	375	410	435	460
automatic	mm	—	400	425	450
Taper in spindle: Standard	ISA	44	44	70	70
On request metric	No.	32	40	50	50
Distance, centreline of spindle to table: maximum	mm	400	425	480	525
minimum	mm	25	15	45	65
Distance, spindle nose to outer bearing	mm	345	500	640	820
Distance, centreline of spindle to overam	mm	110	140	155	180
Distance, column guide to bearing support	mm	480	565	665	930
Number of spindle speeds		12	12	12	20
Range of spindle speeds: Standard	R. p. M.	63—2800	45—2000	32—1400	18—1400
Increased	R. p. M.	90—4000	63—2800	45—2000	—
Number of feeds		13	13	15	15
Range of: longitudinal feeds	mm/min.	14—900	14—900	10—1250	10—1250
cross feeds	mm/min.	—	14—900	10—1250	10—1250
vertical feeds	mm/min.	—	4—250	2,5—315	2,5—315
Rapid traverse: longitudinal	mm/min.	2800	2800	3200	3200
cross	mm/min.	—	2800	3200	3200
vertical	mm/min.	—	800	800	800
Motor for spindle drive:	R. p. M.	1430	1430	1430	1440
Output	HP	3,25	5,7	7,5	15
On request		—	—	7,5/10	15/20,5
Motor for feed drive:	R. p. M.	2770	1380	1390	1410
Output	HP	0,7	1	1,5	3,25
Floor space required	mm	1385×1510	1650×1760	1960×2110	2480×2550
Weight of machine: with standard equipment	kg	900	1500	2500	4500
with railway packing	kg	—	—	3100	5300
with seaworthy packing	kg	—	—	3100	5300
Contents boxed	m^3	—	—	7	12,5

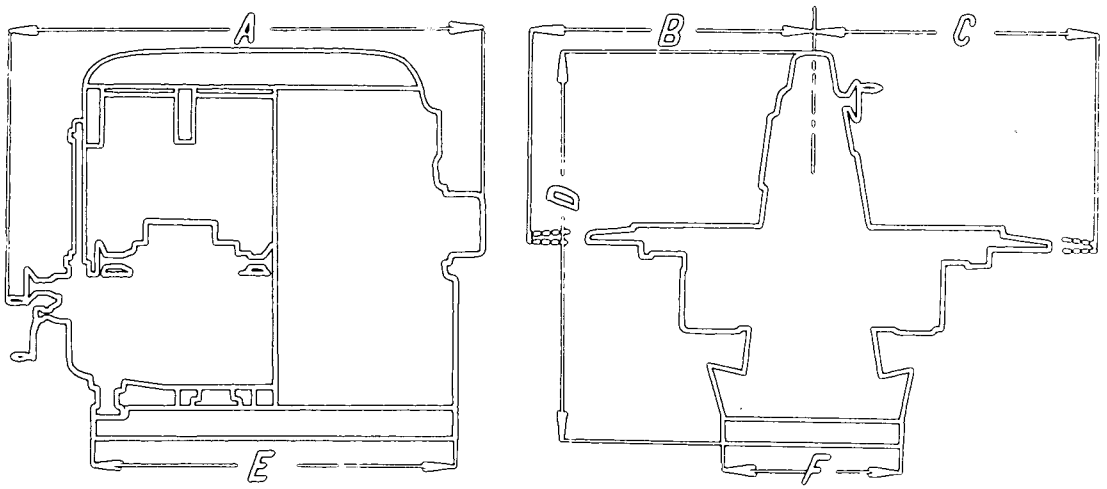

Model	A		B		C		D		E		F	
FA 2 H	1385	54	1097	43	1048	41	1330	52	880	35	550	22
FA 3 H	1550	61	1310	52	1260	50	1470	58	1080	42	680	27
FA 4 H	1970	77	1535	60	1585	62	1680	66	1365	54	720	28
FA 5 H	2400	94	1960	77	1990	78	1930	76	1820	72	900	35

STANDARD EQUIPMENT: Milling arbour with clamping screw, cooling attachment, electric equipment, 2 grease

Approved For Release 1999/09/09 : CIA-RDP82-00457R005200230012-0

25X1X

CPYRGHT

Approved For Release 1999/09/09 : CIA-RDP82-00457R005200230012-0

U SPECIFICATIONS - UNIVERSAL MILLERS

		FA 2 U	FA 3 U	FA 4 U	FA 5 U
Working surface of table: width	mm	200	250	315	400
length	mm	1000	1250	1600	2000
Number of table T-slots		3	3	3	3
Width × distance between T-slots	mm	14×42	14×55	18×70	20×90
Longitudinal travel of table: by hand	mm	640	810	1010	1260
automatic	mm	630	800	1000	1250
Cross travel of table: by hand	mm	220	235	310	410
automatic	mm	—	225	300	400
Vertical travel of table: by hand	mm	300	360	410	410
automatic	mm	—	350	400	400
Taper in spindle: Standard	ISA	44	44	70	70
On request metric	No.	32	40	50	50
Circular adjustment of table in either direction up to		45°	45°	45°	45°
Distance, centreline of spindle to table: maximum	mm	325	375	425	450
miximum	mm	25	15	15	40
Distance, spindle nose to outer bearing	mm	345	500	640	820
Distance, centreline of spindle to overarm	mm	110	140	155	180
Distance, column guide to bearing support	mm	480	565	665	930
Number of spindle speeds		12	12	12	20
Range of spindle speeds: Standard	R. p. M.	63—2800	45—2000	32—1400	18—1400
Increased	R. p. M.	90—4000	63—2800	45—2000	—
Number of feeds		13	13	15	15
Range of: longitudinal feeds	mm/min.	14—900	14—900	10—1250	10—1250
cross feeds	mm/min.	—	14—900	10—1250	10—1250
vertical feeds	mm/min.	—	4—250	2,5—315	2,5—315
Rapid traverse: longitudinal	mm/min.	2800	2800	3200	3200
cross	mm/min.	—	2800	3200	3200
vertical	mm/min.	—	800	800	800
Motor for spindle drive:	R. p. M.	1430	1430	1430	1440
Output	HP	3,25	5,7	7,5	15
On request		—	—	7,5/10	15/20,5
Motor for feed drive:	R. p. M.	2770	1380	1390	1410
Output	HP	0,7	1	1,5	3,25
Floor space required	mm	1385×1510	1650×1760	1970×2350	2490×2800
Weight of machine: with standard equipment	kg	940	1550	2600	4700
with railway packing	kg	—	—	2900	5150
with seaworthy packing	kg	—	—	3200	5550
Contents boxed	m³	—	—	7,5	13,5

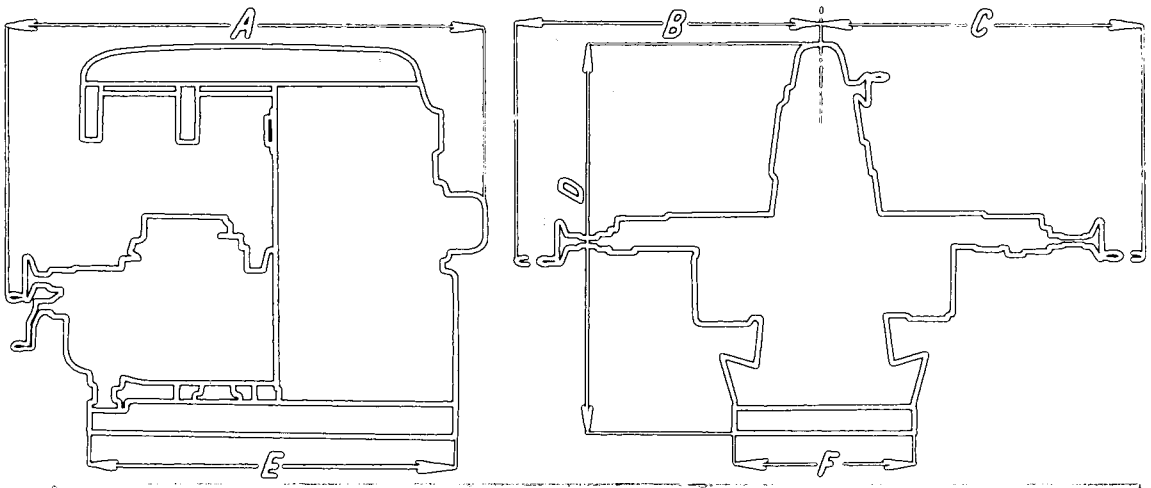

Model	A		B		C		D		E		F	
FA 2 U	1385	54	1080	42	1050	41	1330	52	880	35	550	22
FA 3 U	1650	65	1440	57	1270	50	1470	58	1080	42	680	27
FA 4 U	1970	77	1600	63	1565	62	1680	66	1365	54	720	28
FA 5 U	2490	98	2100	83	2100	83	1930	76	1820	72	900	35

STANDARD EQUIPMENT: Milling arbour with clamping screw, cooling attachment, electric equipment, 2 grease guns, 1 set of spanners, operating instructions. This equipment is included in the price of the machine.

Approved For Release 1999/09/09 : CIA-RDP82-00457R005200230012-0

The English specifications are printed in grey colour. (Subject to change without notice.)

CPYRGHT

25X1X

Approved For Release 1999/09/09 : CIA-RDP82-00457R0052[redacted]

SPECIFICATIONS - HORIZONTAL MILLERS

ENGLISH

		FA 2 H	FA 3 H	FA 4 H	FA 5 H
Working surface of table: width	in.	7 3/4"	9 3/4"	12 3/8"	16 3/4"
length	in.	39 1/2"	49 1/4"	63"	78 1/2"
Number of table T-slots		3	3	3	3
Width × distance between T-slots	in.	0,55" × 1,66"	0,55" × 2,16"	0,71" × 2,96"	0,78" × 3,54"
Longitudinal travel of table: by hand	in.	25"	32"	39 3/4"	55 1/2"
automatic	in.	24 3/4"	31 1/2"	39 3/8"	55"
Cross travel of table: by hand	in.	8 3/4"	11"	14 3/8"	17 3/4"
automatic	in.	—	10 3/4"	14"	17 1/4"
Vertical travel of table: by hand	in.	14 3/4"	16 1/8"	17 1/4"	18 1/4"
automatic	in.	—	15 3/4"	16 3/4"	17 3/4"
Taper in spindle: Standard	ISA	44	44	70	70
On request metric	No.	32	40	50	50
Distance, centreline of spindle to table: maximum	in.	15 3/4"	16 3/4"	19"	20 1/2"
minimum	in.	1"	5/8"	1 3/4"	2 1/2"
Distance, spindle nose to outer bearing	in.	13 1/2"	19 3/4"	25"	32 1/4"
Distance, centreline of spindle to overarm	in.	4 1/4"	5 1/2"	6 1/8"	7"
Distance, column guide to bearing support	in.	19"	22"	26"	36 1/2"
Number of spindle speeds		12	12	12	20
Range of spindle speeds: Standard	R. p. M.	63—2800	45—2000	32—1400	18—1400
Increased	R. p. M.	90—4000	63—2800	45—2000	—
Number of feeds		13	13	15	15
Range of: longitudinal feeds	in. p. M.	1/2"—35"	1/2"—35"	3/8"—49"	3/8"—49"
cross feeds	in. p. M.	—	1/2"—35"	3/8"—49"	3/8"—49"
vertical feeds	in. p. M.	—	0,15"—10"	0,14"—12 1/2"	0,14"—12 1/2"
Rapid traverse: longitudinal	in. p. M.	110"	110"	126"	126"
cross	in. p. M.	—	110"	126"	126"
vertical	in. p. M.	—	31"	31"	31"
Motor for spindle drive:	R. p. M.	1430	1430	1430	1440
Output	kW/HP	2,4/3,25	4,2/5,7	5,5/7,5	11/15
On request		—	—	7,5/10	15/20,5
Motor for feed drive:	R. p. M.	2770	1380	1390	1410
Output	kW/HP	0,5/0,7	0,75/1	1,1/1,5	2,4/3,25
Floor space required	in.	54 1/2" × 59"	65" × 69"	77" × 83"	97 1/2" × 100"
Weight of machine: with standard equipment	lbs	2000	3300	5500	10000
with railway packing	lbs	—	—	6200	11000
wish seaworthy packing	lbs	—	—	6900	11700
Contents boxed	cu. ft	—	—	246	440

Approved For Release 1999/09/09 : CIA-RDP82-00457R005200230012-0

CPYRGHT
Approved For Release 1999/09/09 : CIA-RDP82-00457R005200230012-0

Approved For Release 1999/09/09 : CIA-RDP82-00457R005200230012-0

CPYRGHT Approved For Release 1999/09/09 : CIA-RDP82-00457R005200230012-0

SPECIFICATIONS - UNIVERSAL MILLERS

ENGLISH

		FA 2 U	FA 3 U	FA 4 U	FA 5 U
Working surface of table: width	in.	7 3/4"	9 3/4"	12 3/8"	16 3/4"
length	in.	39 1/2"	49 1/4"	63"	78 1/2"
Number of table T-slots		3	3	3	[illegible]
Width × distance between T-slots	in.	[illegible]" × 1,66"	0,55" × 2,16"	0,71" × 2,96"	0,78" – 3,54"
Longitudinal travel of table: by hand	in.	25"	32"	39 3/4"	55 1/2"
automatic	in.	24 3/4"	31 1/2"	39 3/8"	55"
Cross travel of table: by hand	in.	8 5/8"	9 1/4"	12 1/4"	16 1/8"
automatic	in.	—	8 3/4"	12"	15 7/8"
Vertical travel of table: by hand	in.	12"	14"	16 1/8"	16 1/8"
automatic	in.	—	17 3/4"	15 3/4"	15 3/4"
Taper in spindle: Standard	ISA	44	44	70	70
On request metric	No.	32	40	50	50
Circular adjustment of table in either direction up to		45°	45°	45°	45°
Distance, centreline of spindle to table: maximum	in.	12 3/4"	14 3/4"	16 3/4"	17 3/4"
minimum	in.	1"	1/2"	1/2"	1 1/2"
Distance, spindle nose to outer bearing	in.	13 1/2"	19 3/4"	25"	32 1/4"
Distance, centreline of spindle to overarm	in.	4 1/4"	5 1/2"	6 1/8"	7 1/8"
Distance, column guide to bearing support	in.	18 7/8"	22 1/4"	26 1/4"	36 1/2"
Number of spindle speeds		12	12	12	20
Range of spindle speeds: Standard	R. p. M.	63 – 2800	45 – 2000	32 – 1400	18 – 1400
Increased	R. p. M.	90 – 4000	63 – 2800	45 – 2000	—
Number of feeds		13	13	15	15
Range of: longitudinal feeds	in. p. M.	1/2" – 35"	1/2" – 35"	3/8" – 49"	3/8" – 49"
cross feeds	in. p. M.	—	1/2" – 35"	3/8" – 49"	3/8" – 49"
vertical feeds	in. p. M.	—	0,15" – 10"	0,1" – 12 1/2"	0,1" – 12 1/2"
Rapid traverse: longitudinal	in. p. M.	110 1/2"	110"	126"	126"
cross	in. p. M.	—	110"	126"	126"
vertical	in. p. M.	—	31"	31"	31"
Motor for spindle drive:	R. p. M.	1430	1430	1430	1440
Output	kW/HP	2,4/3,25	4,2/5,7	5,5/7,5	11/15
On request		—	—	7,5/10	15/20,5
Motor for feed drive:	R. p. M.	2770	1380	1390	1410
Output	kW/HP	0,5/0,7	0,75/1	1,1/1,5	2,4/3,25
Floor space required	in.	54 1/2" × 59"	65" × 69"	77" × 89"	97 1/2" × 110"
Weight of machine: with standard equipment	lbs	2070	3430	5730	10400
with railway packing	lbs	—	—	6400	11400
with seaworthy packing	lbs	—	—	9300	12300
Contents boxed	cu. ft	—	—	265	475

Approved For Release 1999/09/09 : CIA-RDP82-00457R005200230012-0

Approved For Release 1999/09/09 : CIA-RDP82-00457R005200230012-0

25X1X

[redacted]