Approved For Release 1999/09/24 : CIA-RDP82-00457R005800680009-9

25X1C

[redacted]

Radar Set Observed near Ograu

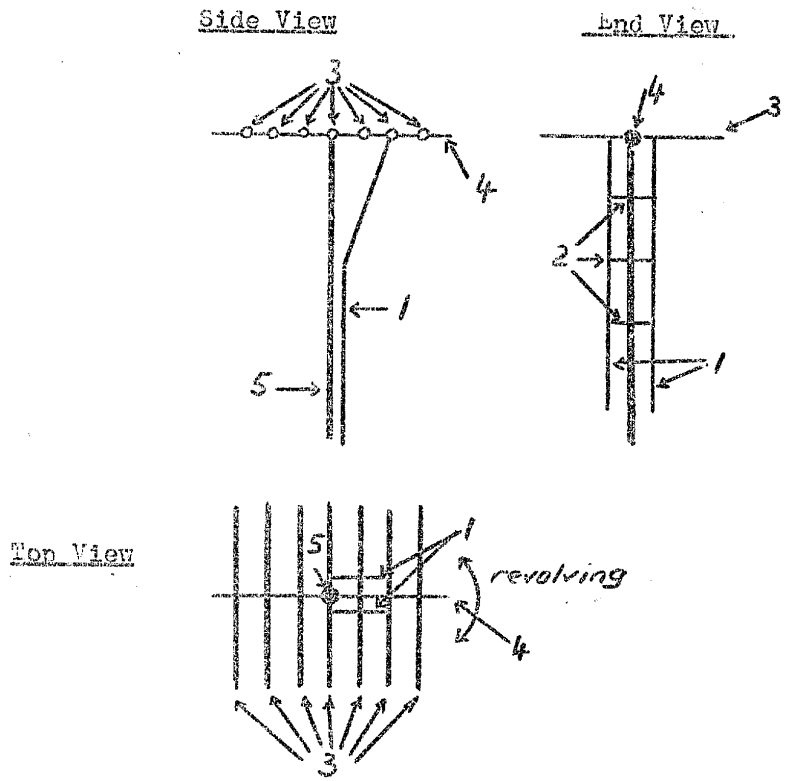

Legend:

1 Load-ins
2 Distance pieces (Abstandshuelse)
3 Metal rods about 75 cm long and 20 mm in diameter
4 Connection for the seven metal rods
5 Rotatable rod on which the antenna is fitted

Approved For Release 1999/09/24 : CIA-RDP82-00457R005800680009-9