APPROVED FOR RELEASE: 2007/02/08: CIA-RDP82-00850R000200070049-9

25 APRIL 1980 (FOUO 5/80) 1 OF 1

APPROVED FOR RELEASE: 2007/02/08: CIA-RDP82-00850R000200070049-9

APPROVED FOR RELEASE: 2007/02/08: CIA-RDP82-00850R000200070049-9

FOR OFFICIAL USE ONLY

JPRS L/9056

25 April 1980

USSR Report

ENERGY

(FOUO 5/80)

FBIS FOREIGN BROADCAST INFORMATION SERVICE

FOR OFFICIAL USE ONLY

APPROVED FOR RELEASE: 2007/02/08: CIA-RDP82-00850R000200070049-9

APPROVED FOR RELEASE: 2007/02/08: CIA-RDP82-00850R000200070049-9

NOTE

JPRS publications contain information primarily from foreign newspapers, periodicals and books, but also from news agency transmissions and broadcasts. Materials from foreign-language sources are translated; those from English-language sources are transcribed or reprinted, with the original phrasing and other characteristics retained.

Headlines, editorial reports, and material enclosed in brackets [] are supplied by JPRS. Processing indicators such as [Text] or [Excerpt] in the first line of each item, or following the last line of a brief, indicate how the original information was processed. Where no processing indicator is given, the information was summarized or extracted.

Unfamiliar names rendered phonetically or transliterated are enclosed in parentheses. Words or names preceded by a question mark and enclosed in parentheses were not clear in the original but have been supplied as appropriate in context. Other unattributed parenthetical notes within the body of an item originate with the source. Times within items are as given by source.

The contents of this publication in no way represent the policies, views or attitudes of the U.S. Government.

For further information on report content call (703) 351-2938 (economic); 3468 (political, sociological, military); 2726 (life sciences); 2725 (physical sciences).

COPYRIGHT LAWS AND REGULATIONS GOVERNING OWNERSHIP OF MATERIALS REPRODUCED HEREIN REQUIRE THAT DISSEMINATION OF THIS PUBLICATION BE RESTRICTED FOR OFFICIAL USE ONLY.

APPROVED FOR RELEASE: 2007/02/08: CIA-RDP82-00850R000200070049-9

APPROVED FOR RELEASE: 2007/02/08: CIA-RDP82-00850R000200070049-9

JPRS L/9056

25 April 1980

USSR REPORT

ENERGY

(FOUO 5/80)

CONTENTS

ELECTRIC POWER

Compressed-Air Power Storage Researched
(Yu. G. Korsov, et al.; TEPLOENERGETIKA, Mar 80) . 1

Construction of Towers for Northern Power Lines
(A. M. Astafeyev, B. P. Novgorodtsev;
ENERGETICHESKOYE STROITEL'STVO, Jan 80)..... 15

Construction of 220-kV Substations in Northern Climes
(S. A. Kolbin, A. M. Parkhomenko; ENERGETICHESKOYE
STROITEL'STVO, Jan 80) 26

APPROVED FOR RELEASE: 2007/02/08: CIA-RDP82-00850R000200070049-9

APPROVED FOR RELEASE: 2007/02/08: CIA-RDP82-00850R000200070049-9

ELECTRIC POWER

UDC 621.438

COMPRESSED-AIR POWER STORAGE RESEARCHED

Moscow TEPLOENERGETIKA in Russian No 3, Mar 80 pp 53-58

[Article by candidates of technical sciences Yu. G. Korsov, V. Ye. Mikhayl'tsev, and V. D. Molyakov and engineers I. S. Bodrov, G. A. Dmitriyev, P. A. Yermolayev, V. Ya. Reznichenko and B. A. Kunikeyevof of the Scientific Planning Department of Central Scientific Research, Planning and Design Boiler and Turbine Institute im. I. I. Polzunov, Moscow Higher Technical School im. N. E. Bauman and the Planning Section of the Leningrad Metal Plant: "Studies on the Thermodynamic Efficiency of Heat Circuits of Compressed Air Storage Power Plants"]

[Text] In the European part of the country at present the load is reduced to 60 percent at night because peak and semi-peak loads constituting 10 and 30 percent of the total load are switched off.

The forced use of base-power generating facilities under these conditions means that they must operate in variable modes and with shutdowns, which has an adverse effect on the reliability and efficiency of power delivery to the entire country (1,2). This situation requires putting into operation high-power adaptable equipment which can effectively handle variable loads and normalize the operation of the base-power generating facilities. The scheduled widespread incorporation of atomic power plants (AES's) will increase even more the inadequacy of special forms of variable function equipment. The most important of them are pumped-storage and gas-turbine compressed-air storage power plants (GAES's and VAES's).

In VAES's the use of compressed-air accumulators makes it possible to spread the processes of compression and expansion of the working fluid in the gas turbine engines out over a period of time so that compression (the compressing operation) is accomplished with power generated in highly efficient solid fuel or atomic power plants when the load is decreased in the power systems, thereby charging them more, while during peak load the stored air in the gas turbine is activated (turbine mode) producing electric power. The standard location of VAES's in a diagram of power system loads is shown in figure 1 (3).

APPROVED FOR RELEASE: 2007/02/08: CIA-RDP82-00850R000200070049-9

APPROVED FOR RELEASE: 2007/02/08: CIA-RDP82-00850R000200070049-9

The advantages of VAES's over GAES's are the smaller (2.5-3 times) relative capital costs and an increase (more than 10-40 percent depending on the VAES layout) in the power recovered in the network during peak load over the power supplied from the network in filling the accumulator since the recovered power in GAES's is approximately 25 percent less than that removed. In addition, VAES's, unlike GAES's, may operate without consuming electric power from the electrical network. In this case the compressor and turbine groups operate simultaneously while the electric power of the plant is determined by the difference in power of the turbines and compressors (in much the same way as an autonomous gas turbine engine).

This enables VAES's to operate in emergency situations when power reserves in the power system are lacking and milking the air accumulator is not possible. As a result, VAES power systems will be more stable in emergency situations and therefore require a smaller redundancy of electric power. VAES construction is less restricted by geographic conditions than GAES construction, since air accumulators can be developed in porous, water-bearing strata, salt domes, natural underground cavities and rocky massifs, which makes it possible to find VAES sites in almost any area of the country. The listed geological formations, especially the porous, water-bearing strata, allow the development of air accumulators with a large capacity, which have the potential for longer plant operation in the generating mode than GAES's and therefore expand the VAES capability for load regulation, making it possible, for instance, to carry out weekly adjustment.

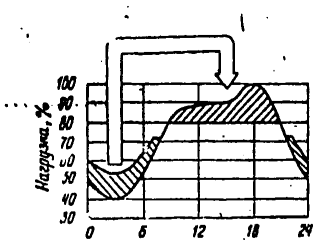

Figure 1. Location of VAES in Power System Load Diagram

When there is a shortage of gas turbine fuel, VAES's may be developed using systems in which gas turbine fuel is not burned, but the air ahead of the turbine is heated by exhaust from the compressor cooler. In this case the VAES's will be just as efficient as GAES's if the temperature ahead of the turbine exceeds 523 K, which is possible with the use of a high-temperature oil-based cooler. However, combustion of the gas turbine fuel increases VAES efficiency even more.

VAES's have two to three times more individual capacity than autonomous gas turbine plants and may generate two to three times more electric power for each kilogram of high-quality gas turbine fuel consumed, which is very important when fuel is scarce and expensive.

APPROVED FOR RELEASE: 2007/02/08: CIA-RDP82-00850R000200070049-9

APPROVED FOR RELEASE: 2007/02/08: CIA-RDP82-00850R000200070049-9

Table 1. Technical Specifications of VAES's in Foreign Designs

Technical parameters	Country, manufacturer or power plant designer			
	FRG Brown-Bovari	USA General Electric	GDR Bergman-Borzig	Sweden Stal-Laval
Peak power, megawatts	290	4X200	6X115	260
Peak power generating time, hours/day	2	500 hr/year	4	no data
Air pressure before high pressure turbine, MPa	4.48	4.4	1.25	5.0
Gas temperature before h.p. turbine, K	810	714	873	1048
Gas temp. before l.p. turbine, K	1088	1073	---	1073
Air flow through turbine, kg/sec	408	252	280	350
Compressor power, Mwatt	59	117	4X90	no data
Air flow through compressor, kg/sec	100	252	203	no data
Pressure in air accumulator, MPa	6.89	8.4	1.5-2.5	5.0
Air accumulator charging time, hr/day	8	2700 hr/year	7.84	no data
Air accumulator volume, m^3	284,000	167,000	480,000-800,000	no data
Consumption of liquid fuel heat, kilojoules/kilowatt-hour	5797	4237-4535	4255	4770
Efficiency factor of facilities with power supplied by compressors from steam turbine power plants with efficiency = 42 percent, %	28.2	32.7-31.8	27.7	no data
Comments	Operating VAES Huntorf	Planned	Planned	Solid fuel VAES, planned

VAES projects have already been developed abroad. Test run of the first VAES in the world, the 290 megawatt capacity Huntorf began in the FRG in 1978 (4-7). The main units of the planned AES as well as the heat-power operated equipment of the Huntorf VAES are based on gas-turbine equipment whose production engineering has already been done by the firms. The main specifications of the foreign VAES's are given in table 1.

Preliminary analyses of the technical feasibility of developing VAES heat-power producing components based on domestic equipment made by the Leningrad

APPROVED FOR RELEASE: 2007/02/08: CIA-RDP82-00850R000200070049-9

APPROVED FOR RELEASE: 2007/02/08: CIA-RDP82-00850R000200070049-9

Metal Plant Planning Section and the Scientific Planning Department of the Central Scientific Research, Planning and Design Boiler and Turbine Institute have shown that several VAES modifications may be developed on the basis of heavy-duty power-producing gas turbine engines of the existing type GT-100 and on the planned type GTE-150 of the Leningrad Metal Plant Planning Section. A very efficient peak VAES may be based on the 150 megawatt gas turbine engine (GTE-150). The heat circuit of this equipment with a single-unit capacity of 500 megawatts is shown in figure 2 and its main features are given in table 2. The turbine section of this equipment consists of high and low pressure gas turbines with intermediate heating of the gas and a GTE-150 turbine is used for the low pressure turbine operating at full volume in a conservation mode like that used in the autonomous GTE-150. Also included is a series of three compressors operating from a single drive: two end thrust (low and medium pressure) and one axial-flow (high pressure). The main heat power-producing equipment may be designed and manufactured in the form of separate portable units not requiring disassembly during installation at a plant. For one hour of operation of this equipment we need a constant volume air accumulator with a 200,000 m^3 volume or a constant pressure with a 50,000 m^3 volume. A less efficient VAES modification may be developed on the basis of a GT-100 type gas turbine engine.

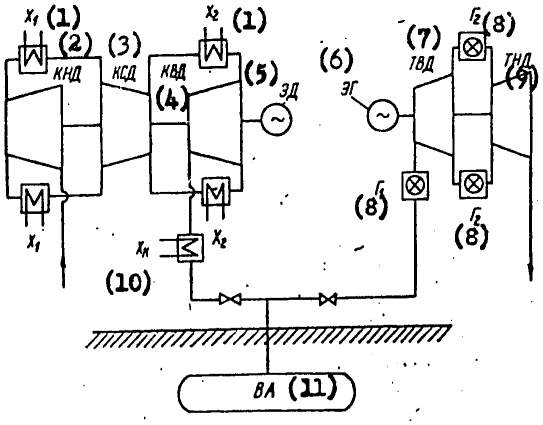

Figure 2. VAES Diagram Using GTE-150 Gas Turbine Equipment From Leningrad Metal Plant

Key:

1. x_1, x_2 -- intermediate air coolers
2. Low pressure compressor
3. Medium pressure compressor
4. High pressure compressor
5. Electric motor
6. Generator
7. High pressure turbine
8. High and low pressure combustion chambers
9. Low pressure turbine
10. Final air cooler
11. Air accumulator

APPROVED FOR RELEASE: 2007/02/08: CIA-RDP82-00850R000200070049-9

APPROVED FOR RELEASE: 2007/02/08: CIA-RDP82-00850R000200070049-9

To identify an efficient VAES design and parameters we need comprehensive technical and economic evaluation on the level of the relative costs for the power system as a whole, including studies of the effectiveness and cost of the heat-power producing equipment and the air accumulator, as well as the considered effect of mode variations introduced by inserting VAES's into the operation of all types of power-system generating equipment (8). However, this should precede research on various VAES designs and parameters for selection of the most promising.

Table 2. Basic Technical Specifications of the Leningrad Metal Plant Planning Section 500 Megawatt VAES

Technical parameters	Numerical values
Turbine Group	
Power, megawatts	500
Frequency of rotation, revolutions/min	3000
Air flow, kilograms/sec	630
Pressure ahead of high pressure turbine, MPa	4.6
Temperature ahead of high pressure turbine, K	923
Pressure ahead of low pressure turbine, MPa	1.27
Temperature ahead of low pressure turbine, K	1223
Temperature of exhaust gases, K	703
Liquid fuel consumption with Q_p^H = 42,000 kilojoules/kg, kg/sec	18
Relative consumption of liquid fuel heat, kj/kwt-hr	5410
Heat efficiency in liquid fuel consumption, %	66.5
Efficiency factor of facility with electric motor power supply to the compressors from a steam turbine power plant with efficiency = 42 percent, %	31.7
Compressor Group	
Total power of compressors, megawatts	110
Frequency of rotation, rev/min	3000
Air flow, kg/sec	200
Compression level of low pressure compressor	5.7
Compression level of medium pressure compressor	4.0
Compression level of high pressure compressor	3.0
Pressure before high pressure compressor, MPa	6.6
Number of intermediate coolers	2
Number of final coolers	1
Air temperature in final cooler, K	323
Air temperature in intermediate cooler, K	303
Total amount of heat recovered in coolers, kj/hr	$365 \cdot 10^6$

This task has been accomplished in studies performed by the Planning Department of the Central Scientific Research, Planning and Design Boiler and Turbine Institute and the Moscow Higher Technical School on the fuel efficiency of various VAES turbine equipment designs taking their possible

APPROVED FOR RELEASE: 2007/02/08: CIA-RDP82-00850R000200070049-9

APPROVED FOR RELEASE: 2007/02/08: CIA-RDP82-00850R000200070049-9

operating conditions into account. The method used in the studies for estimating the parameters of the VAES heat power-producing equipment allows determination of the plant capacity in the compressor and turbine modes, the consumption of electric power in driving the compressors and the plant efficiency taking into account the following characteristics of its operation:

--the absence of direct mechanical and gas dynamic connection between the compressor and turbine;

--the generation of the total turbine power in the power network;

--the use of various types of fuel in compressor and turbine operation;

--the presence of additional hydraulic resistance in the circuit joining the compressor, turbine and air accumulator;

--the presence of leaks in the air accumulator;

--variation of pressure in the air accumulator associated with heating or cooling of the air in it.

The lack of a single criterion for these estimates is creating considerable difficulty in evaluating VAES fuel efficiency. For this reason three types of efficiency factors have been proposed for evaluating plant fuel efficiency.

1. Turbine efficiency is indicated by the efficiency of gas-turbine fuel consumption and is represented as:

$$\eta_{cT} = \sum_{i=1}^{n} N_T \Big/ \sum_{i=1}^{n} Q_{Ti},$$

where $\sum_{i=1}^{n} N_{Ti}$ is the sum of the turbine capacities; $\sum_{i=1}^{n} Q_{Ti}$ is the sum of heat flows supplied to the air in the combustion chambers of the turbines in burning the gas turbine fuel.

The overall efficiency of a plant as a whole is indicated by the efficiency of complete fuel consumption both in the turbine and in the compressor operating modes:

$$\eta_{cT} = \frac{\sum_{i=1}^{n} N_{Ti}}{\sum_{i=1}^{n} Q_{Ti} + \left(\sum_{i=1}^{m} Q_{T.Ki}\right)\frac{z_K}{z_T}},$$

APPROVED FOR RELEASE: 2007/02/08: CIA-RDP82-00850R000200070049-9

APPROVED FOR RELEASE: 2007/02/08: CIA-RDP82-00850R000200070049-9

where $\sum_{l=1}^{m} Q_{т.кl}$ is the sum of heat expenditure on compressing air during air accumulator charging; z_k is the compressor operating time; z_t is the turbine operating time.

3. Overall conditional efficiency in a plant as a whole is indicated by efficiency in the complete consumption of fuel, allowing for the different costs of solid and gas turbine fuel ($s_{t.t.}$ and $s_{t.r.}$):

$$\eta^*_{eт} = \frac{\sum_{l=1}^{n} N_{тl}}{\sum_{l=1}^{n} Q_{тl} + \left(\sum_{l=1}^{m} Q_{т.кl}\right) \frac{z_к}{z_т} \frac{s_{т.т}}{s_{т.г}}}.$$

VAES air accumulators may be divided into two main types: constant pressure (p = const) and constant volume (V = const) which primarily identify the different turbine and compressor operating modes of the VAES. With a constant pressure air accumulator turbine and compressor operation are accomplished with constant pressure and air flow. With accumulators of this type belong accumulators implemented in porous, water-bearing strata with a high permeability and also accumulators with a hydrostatic pressure equalization system which is a special accumulator associated properly with the capacity of an air accumulator located at a higher geodesic level. In the process of filling an air accumulator, the compressors pump in compressed air, forcing out water, and during turbine operation the water is displaced from the air accumulator. Using constant volume air accumulators, that is air accumulators with a closed capacity washed out in a salt dome or cut out in a rocky massif, various turbine operating modes are possible. First, in this case the turbine can operate with constant pressure and flow, although with added losses due to the installation of a throttle valve between the air accumulator and turbine which reduces the pressure ahead of it to the least pressure in the accumulator during its discharge. This operating mode, as with the use of a constant pressure accumulator, makes it possible to obtain continuous useful power with a constant gas temperature in the combustion chambers. Second, the turbine can operate with varying pressure corresponding to changes of pressure in the accumulator. However, in this variation with a constant gas temperature ahead of the turbines both the instantaneous discharge of air and also the power generated in the accumulator discharge process will be reduced and the turbines will operate in the variable mode for the entire period. Continuous generated power may be obtained if a high pressure turbine with an adjustable nozzle is used and the effect of reducing the air pressure compensates for the increase in the gas temperature ahead of the turbines.

In the studies performed, the following turbine operating modes were considered:

air discharge G_B, gas temperature T_0^*, air pressure constant;

APPROVED FOR RELEASE: 2007/02/08: CIA-RDP82-00850R000200070049-9

APPROVED FOR RELEASE: 2007/02/08: CIA-RDP82-00850R000200070049-9

air discharge and gas temperature constant and air pressure variable;

air discharge constant, gas temperature variable from the state of conservation of the total continuous turbine power and air pressure variable.

Calculations were done for 12 designs and groupings of turbine and compressor equipment, the more general of which are given in figure 3. For convenience, the turbine and compressor group types are assigned general symbols. For the turbine groups:

$$aTвГРП,$$

where a is the number of turbines (expansion stages); B is the number of combustion chambers (heat input points obtained by burning the gas turbine fuel); P is the presence of a regenerator; П is the presence of a heater for heating air with heat stored during compressor operation.

For the compressor groups:

$$cKdX,$$

where c is the number of compressors (compression stages); d is the number of coolers.

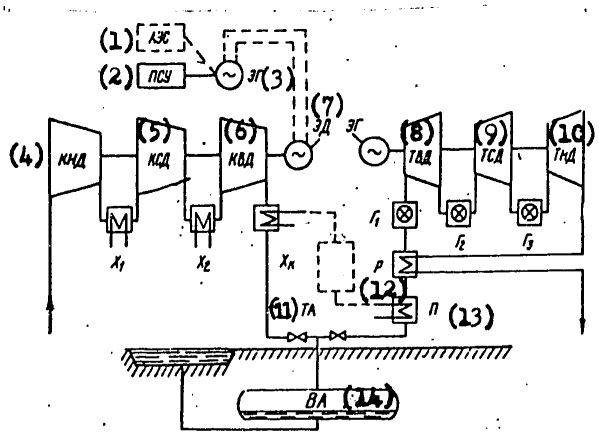

Figure 3. Calculated VAES Heat Circuit

Key:

1. Atomic power plant
2. Steam power plant
3. Generator
4. Low pressure compressor
5. Medium pressure compressor
6. High pressure compressor
7. Electric motor
8. High pressure turbine
9. Medium pressure turbine
10. Low pressure turbine
11. Heat accumulator
12. Regenerator
13. Air heater
14. Air accumulator

APPROVED FOR RELEASE: 2007/02/08: CIA-RDP82-00850R000200070049-9

APPROVED FOR RELEASE: 2007/02/08: CIA-RDP82-00850R000200070049-9

In the calculation, the air flow through the turbine is assumed to be equal to 500 kilograms/second.

Two levels of maximum pressure in the air accumulator (6.48 and 10.0 MPa) were studied. In the first case the calculations were applied to a 3K3X compressor group with a discharge of 200 kg/sec and in the second a 4K4X compressor group was used.

In calculating the parameters of all the designs with regenerators, the degree of regeneration was assumed to be variable due to limits in the reduction of temperature in the regenerator at the point 403 K to prevent low-temperature corrosion.

In designs where the air flowing from the accumulator is heated by exhaust from the compressor coolers, the air temperature after the heater is assumed to be the same when the total amount of compression in the compressors is the same.

Due to the fact that all the turbine power in a VAES is useful, increasing the starting gas temperature does not lead to as pronounced an increase in power and efficiency as in autonomous gas turbine facilities. Simple comparison shows that with a 1.5-fold increase in the gas temperature from 1000 to 1500, the peak VAES power also undergoes a 1.5-fold increase whereas the power of an autonomous gas turbine facility is increased 2- to 2.5-fold. In addition, efficient air recovery in cooling gas turbine components has been a problem in VAES's since it may only be drawn from an accumulator with a higher pressure than necessary. Because of this, it is expedient to limit the gas temperature ahead of the VAES turbines to a point not requiring cooling of the vanes. In the given studies, the gas temperature is assumed to equal 1073 K.

The dependence of efficiency, power and relative consumption of gas turbine fuel for various VAES designs with constant gas temperatures and air discharges for both types of accumulator is shown in figures 4 and 5.

The results obtained in the studies show that complication of the VAES heat circuit resulting from an increase in the level of heat input (number of combustion chambers) makes it possible, with all other conditions equal, to obtain 20 percent more useful power in a two chamber facility and 40 percent more in a three chamber facility than in a single chamber facility. The use of a p = const air accumulator compared with a V = const accumulator with identical maximum pressure makes it possible to obtain a large amount of power: 6 percent for a single chamber, 10 percent for a two chamber and 11 percent for a three chamber facility.

The turbine efficiency of a single chamber facility with a simpler design for the p = const air accumulator equals 0.825; heating the air ahead of the combustion chamber increases the efficiency by 5 percent and a regenerator increases it by 12 percent. Using a V = const accumulator reduces

APPROVED FOR RELEASE: 2007/02/08: CIA-RDP82-00850R000200070049-9

APPROVED FOR RELEASE: 2007/02/08: CIA-RDP82-00850R000200070049-9

the efficiency in this case by 5 percent. An increase in the number of combustion chambers also lowers turbine efficiency (by 7 percent for a two chamber and 20 percent for a three chamber facility due to the increase in gas turbine fuel consumption). Using a regenerator reduces the lowering of turbine efficiency, with an increase in the number of chambers by 2 to 5 percent.

The overall efficiency factor for a single chamber of the simplest design equals 0.3. Inserting a heater has a slight effect on its value while using a regenerator raises its value by 5 percent. With a change to two chamber and three chamber designs without a regenerator, this efficiency factor is increased by approximately 10 percent and by 13 percent with a regenerator for a two chamber and 18 percent for a three chamber design.

Analysis of the operation of VAES compressors and turbines with variation of pressure in a constant volume accumulator of 10 to 6.8 MPa and of 6.5 to 4.5 MPa for various levels of maximum pressure shows that, in the accumulator charging process, low and medium pressure accumulators operate feasibly at the calculated points, variation of the overall degree of compression is provided mainly by the last high pressure compressor and its degree of compression is reduced from two to three as in the 3K3X design. This requires careful matching of the compressors, the adoption of an adjustable input control device and an adjustable rotary diffuser for the high pressure rotary compressor for increasing the efficiency factor of the compressor group in a variable operating mode.

Reducing pressure by discharging the accumulator in the same range with a constant gas temperature ahead of the turbines leads to a sharp reduction in useful power (approximately 36 percent). Continuous power with a drop in pressure can be obtained over and above the expansion by providing for uniformity of air discharge by rotation of the nozzle of the high pressure turbine one point from about a 15 to a 27 degree angle and adjusting the gas temperature ahead of the high pressure turbine as shown in figure 6. With such adjustment, the VAES power is equal to the power obtained with air expansion and the efficiency factor value is somewhat higher. Thus, from the point of view of thermodynamics the most efficient VAES designs are those with constant pressure air accumulators and designs with constant volume accumulators and expansion of the air ahead of the turbine are less efficient. Other modifications for regulating the parameters ahead of the turbine with a V = const accumulator occupy an intermediate position.

Complicating the heat circuit by increasing the number of heat inputs (combustion chambers) leads to an increase not only in power and overall efficiency of the VAES but also in the relative gas turbine fuel consumption and therefore lowers the plant's turbine efficiency.

From the point of view of fuel economy, a regenerator facility is extremely efficient and makes it possible to increase both the overall and the turbine efficiency of the VAES. Heating the air at the output of the accumulator using heat removed from the compressor group coolers is considerably less efficient, which is related to the assumed value of the intermediate heater

APPROVED FOR RELEASE: 2007/02/08: CIA-RDP82-00850R000200070049-9

APPROVED FOR RELEASE: 2007/02/08: CIA-RDP82-00850R000200070049-9

temperature (90 degrees C). The effectiveness of the heating may be increased by increasing this temperature.

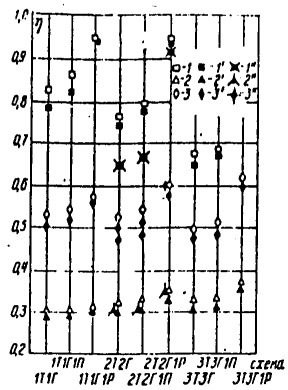

Figure 4. Values $\eta_{cT}, \eta_{cc}, \eta^*_{cb}$ for Various VAES Heat Circuits with Constant T^*_0 = 1073 K and G_B = 500 kg/sec and also Three VAES Diagrams with Leningrad Metal Plant Equipment.

1-3 -- p_{ak} = const; 1'-3' -- V_{ak} = const; 1''-3'' -- VAES designs with LMP equipment with T^*_{01} = 923 K, T^*_{02} = 1223 K, G_B = 630 kg/sec with V_{ak} = const.

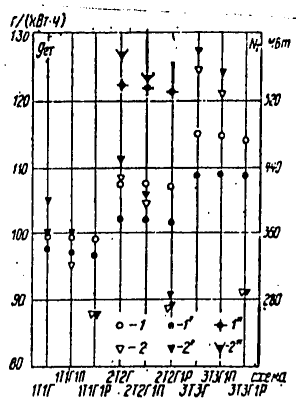

Figure 5. Values of Turbine Power N_T and Relative Consumption of Gas Turbine Fuel g_{eT} for various VAES Heat Circuits with Constant T^*_0 = 1073 K and G_B = 500 kg/sec and also for Three VAES Designs with LMP Equipment.

1,1',1'' -- N_T; 2, 2', 2'' -- g_{eT}; 1,2 -- p_{ak} = const; 1',2' -- V_{ak} = const; 1'',2'' -- VAES designs with LMP equipment with T^*_{01} = 923 K, T^*_{02} = 1223 K, G_B = 630 kg/sec with V_{ak} = const.

APPROVED FOR RELEASE: 2007/02/08: CIA-RDP82-00850R000200070049-9

APPROVED FOR RELEASE: 2007/02/08: CIA-RDP82-00850R000200070049-9

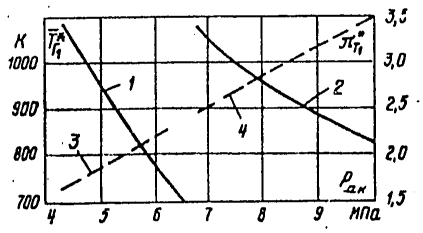

Figure 6. Program for Regulating $T^*_{г1}$ and π^*_{T1} High Pressure Turbines Depending on Air Pressure in the Accumulator p_{ak} with G_B = const; N_T = const for 3T3Г, 3T3Г1P, 3T3Г1П, 2T2Г, 2T2Г1P, 2T2Г 1П Heat Circuits. 1,2 -- $T^*_{г1}$; 3,4 -- π^*_{T1}.

Technical and economic analyses of a 500 megawatt VAES with turbine equipment based on the Leningrad Metal Plant Planning Section GTE-150 showed that capital costs not depending on hours of use, capital expenditures on VAES's as compared with autonomous gas turbine plants are increased with more hours of use because of the increase in required air accumulator volume, and are therefore more expensive. The relative cost of a plant without taking into account the accumulator cost equals 37 rubles/kilowatt with one compressor group for 2 hours operation per day in the generating mode and 45 rubles/kilowatt with two compressor groups for 4 hours operation per day. The total relative cost of a VAES for 2 hours operation per day amounts to about 45 rubles/kilowatt for an accumulator in a salt dome and about 38.5 rubles/kilowatt for an accumulator in porous, water-bearing strata while for 4 hours operation per day it is about 61 and 48 rubles/kilowatt respectively for these two types of air accumulators. In this connection VAES's are most efficient operating in the peak zone of the load diagram. Thus, operating in the turbine mode for 400-500 hours per year, a VAES, compared with an autonomous GTE-150, provides a savings in relative costs in the range of 1.1 - 1.5 kopecks/kilowatt-hour, that is about 20 - 30 percent. With an increase in the duration of operation, this savings is reduced while with the use of VAES's more than 2000 hours/year, their use is economically advantageous only in the case of the use of low-cost air accumulators such as those implemented in porous, water-bearing strata.

Analyzing the considered designs from the point of view of their national economic impact, it should be expected that the effect of factors which increase the thermodynamic efficiency will be lessened. Thus, the thermodynamic effectiveness of complicating the design (increasing the number of compression and expansion steps) will be reduced with an increase in cost of equipment due to the increase in the capital components of the relative costs, while the efficiency of using a regenerator will be reduced by an increase in the equipment cost and the period during which the VAES turbines are in operation.

APPROVED FOR RELEASE: 2007/02/08: CIA-RDP82-00850R000200070049-9

APPROVED FOR RELEASE: 2007/02/08: CIA-RDP82-00850R000200070049-9

Conclusions

1. The use of an air accumulator makes possible the development of an adaptable facility with rather high thermodynamic and technical-economic indicators. For example, with the development of a VAES based on gas turbine engines of the GTE-150 type it will have a heat discharge equal to 5420 kilojoules/kilowatt-hour, which corresponds to a turbine efficiency of 66.5 percent. Using a regenerator makes it possible to increase its value to 92 percent.

2. Final choice of the base design for a VAES and its actual modification for accumulator type may be done only after careful technical and economic analysis and comparison of alternative versions according to relative expenditures by the power system as a whole taking into account the mode changes caused by putting VAES's into operation for all forms of generating equipment of the power system.

3. However, the results of thermodynamic analysis of the VAES heat circuits allowing for their expected impact on the national economic efficiency of the power system as a whole makes it possible even at this stage to select with a reasonable degree of accuracy a medium-complexity design of the 2T2G type as the basis for an experimental industrial VAES oriented toward implementation of a turbine group on existing (GT-100 l.p. turbine) or scheduled for production (GTE-150 turbine) equipment.

BIBLIOGRAPHY

1. Dobrokhotov, V. I.; and Troitskiy, A. A. "Technical Progress in Heat Power Engineering and the Fuel and Energy Balance of the Country," TEPLOENERGETIKA, No 7, 1976.

2. Gorin, V. I.; and Chernya, G. A. "Development of Power Systems in the Tenth Five-Year Plan," TEPLOENERGETIKA, No 2, 1976.

3. "Huntorf in Operation," GAS TURBINE WORLD, Jan 1979.

4. Gasparovic, N.; and Schubert, B. "Betriebssichere und kostengunstige Gasturbinen im Luftspeicherkraftwerk zur Spitzenlastdeckung," ELEKTRIZITATSWIRTSCHAFT, Jg 77, Heft 7, 1978.

5. Zugg, P.; and Hoffeins, H. "Brown Boveri Luftspeicher-Gasturbinen," BROWN BOVERI MITT., Bd 64, No 1, 1977.

6. Butler, P. "Compressed air plans for storing power," ENGINEER, Vol 245, No 6338, 1977.

7. Harboe, H. "Importance of coal for heat and power generation," STAL-LAVAL, Sweden, 1974.

APPROVED FOR RELEASE: 2007/02/08: CIA-RDP82-00850R000200070049-9

APPROVED FOR RELEASE: 2007/02/08: CIA-RDP82-00850R000200070049-9

8. Korsov, Yu. G.; Gel'tman, A. E.; Il'ina, L. V.; and others. "Survey of Efficient Outlines for Future Heavy-Duty Power Producing Gas Turbine Engines," TRUDY TsKTI, issue 165, 1978.

COPYRIGHT: Izdatel'stvo "Energiya", "Teploenergetika", 1980.

8945
CSO: 1822

APPROVED FOR RELEASE: 2007/02/08: CIA-RDP82-00850R000200070049-9

APPROVED FOR RELEASE: 2007/02/08: CIA-RDP82-00850R000200070049-9

ELECTRIC POWER

UDC 621.315.1.1001.2:621.315.66

CONSTRUCTION OF TOWERS FOR NORTHERN POWER LINES

Moscow ENERGETICHESKOYE STROITEL'STVO in Russian No 1, Jan 80 pp 49-52

[Article by Engineers A. M. Astafeyev and B. P. Novgorodtsev]

[Text] The need has arisen for development of base designs specially intended for regions of the Far North and Western Siberia, which are characterized by almost total lack of roads, the presence of large almost unpassable marshy and wooded sections, lengthy spring flooding, low negative air temperatures (the absolute minimum reaches -55°C) and very sparse population density. In connection with the growth of the volume of electric power transmission lines in these regions, the following requirements are placed on designs for such bases:

--sharp reduction of weight;

--technological feasibility, taking the possibility of using helicopters into consideration;

--reliability at air temperatures at below -40°C;

--good plant availability.

The project "Designs for Electric Power Transmission Lines in Permafrost Regions and the Far North" was performed in accordance with the plan for new technology at the Energoset'proyekt [All-union Order of the October Revolution State Planning and Surveying Scientific Research Institute of Power Systems and Power Supply Networks] Institute. In the initial planning stage the advisability of using wooden, reinforced concrete and steel towers and means for fixing them in the soil were examined. Blueprints were drawn up for wooden and steel towers and their fastenings.

Development of base designs was carried out for three arbitrary zones with various ice-glaze, wind and temperature permafrost conditions (Table 1).

APPROVED FOR RELEASE: 2007/02/08: CIA-RDP82-00850R000200070049-9

APPROVED FOR RELEASE: 2007/02/08: CIA-RDP82-00850R000200070049-9

Table 1

Indicator	Zones		
	A	B	C
Wind speed, m/sec	25	40	50
Thickness of ice glaze sheet, mm	10	20	40
Soil temperature at depth of 10m, °C	-1 - -3	-3 - -9	-6 - -10

Four suspension and anchor-angle wooden towers secured to wooden piles for 110 and 220 kV overhead lines, have been developed for zones A and B. Furthermore, for zone B four suspension and anchor-angle steel towers with triangular arrangement of the cables secured to pile foundations made from steel pipes have been developed for zone B (cf. Table 2, e.g. 1, 2, 9, 10).

The steel towers intended for installation in this zone are similar to standard towers. The only difference is replacement of the butt weld by bolt connectors (the use of a butt weld is undesirable when performing work in regions of the Far North). The small dimensions of towers for 110 kV overhead lines (OL) permit them to be put together at assembly points with subsequent transporting to the line by any means, including by helicopter. The suspension tower for 220 kV OL is single-based, with guys made from small sections. The anchor-angle tower has somewhat larger dimensions and weight.

Four suspension and anchor-angle steel towers with horizontally arranged cables were developed for zone C. Such a cable arrangement is mandatory in accordance with the specifications for installation of electrical equipment for the particular ice-glaze region (cf. Table 2, et., 3, 4, 11, 12). Bolt connections are also used in the designs of two-guyed suspension portal towers and two T-shaped anchor-angle towers. It must be noted that the towers for zone C are designed to support the strengthened steel-aluminum cables and for loads corresponding to the heaviest estimated climatic conditions. Thus, these towers may be considered universal in spite of the fact that their weight, naturally, exceeds the weight of the other types of steel towers.

The series of towers under consideration for regions of the Far North was developed up to confirmation of the Decision of Glavtekhupravleniye [Main Technical Administration for the Operation of Power Systems] and Glavniiproyekt [Main Administration of Scientific-Research and Design Organizations] (1975), in accordance with which increased voltage in the cables is permitted. At the present time, as towers of this series with cables, the cross-section of which is smaller than that accepted in the designs are being introduced, the voltage in the cables may be increased, thereby permitting us to increase the spans and, correspondingly, to reduce the number of towers on the electric power transmission lines.

APPROVED FOR RELEASE: 2007/02/08: CIA-RDP82-00850R000200070049-9

APPROVED FOR RELEASE: 2007/02/08: CIA-RDP82-00850R000200070049-9

The result of the calculations executed within the scope of the project showed that in zone B the use of the new towers will permit the cost of construction of 1 kilometer of 110 kV OL to be reduced by R 4,500 and by R 9,000 for 220 kV OL; the figures in zone C are respectively R 2,100 and 7,400.

The experience of construction in the northern regions demonstrates that under the particularly complex conditions for carrying out construction and installation operations, preference must be given to tower designs made from welded sections, the use of which will permit us to reduce labor expenses on the line. The use of welded designs is particularly advisable in most cases when the towers are not transported by rail.

A series of welded towers for 110 and 220 kV OL intended for installation in the regions under investigation was developed taking these conditions under consideration. They may be used on single-circuit and double-circuit electric-power transmission lines erected in the I-IV ice-glaze regions and up to and including region III, based on wind load with weak line play.

Suspension and anchor-angle single-circuit and double-circuit towers were developed for 110 and 220 kV electric-power transmission lines (cf. Table 2, eg. 5-8, 13-16). The suspension towers are the same height; the anchor-angle towers for 110 kV OL are 5 meters high with their bases and the anchor-angle towers for 220 kV OL are 9 meters high with their bases (the anchor-corner towers are simultaneously terminal towers). The 110 kV towers are designed to carry AS 120/19 cable and a single TK 9.1 (S-50) overhead lightning ground wire, the 220 kV towers, for carrying AS 300/39 cable and a single CK 11 (S-70) ground wire. The voltages in the cables are taken in accordance with the following "Specifications for Setting Up Electrical Installations-76." The voltages in the ground wires are insured by the selection of the required distances between the ground wire and the cable in the middle of the span. Ground wire supports are specified on the ground wires for melting the ice glaze.

The insulated suspension of the ground wire, necessary for melting the ice glaze, is permitted on towers of all types. The AS 70/72 ground line used for communications may also be suspended on 220 kv OL. Ground-wire supports for carrying two ground wires are not called for on the towers.

The anchor-angle towers for 110 kV OL are designed for the break of two AS 120/19 cables and for 220 kV OL with a break of a single AS 300/39 cable (emergency condition) in accordance with the requirement of "Specifications for Setting Up Electrical Installations-76." Thus, all of the anchor-angle towers are normal (not lightened) and may be used without any restrictions whatsoever.

APPROVED FOR RELEASE: 2007/02/08: CIA-RDP82-00850R000200070049-9

APPROVED FOR RELEASE: 2007/02/08: CIA-RDP82-00850R000200070049-9

TABLE 2

Type of Tower	Design and Tower Number	Voltage, kV	Kind of Cable	Tower Weight, t.
Suspension	Fig. 1	35, 110	AS 70/11-AS 240/32	2.8
	Fig. 2	220	AS 300/39, AS 400/51	3.8
	Fig. 3	35, 110	AS 150/34	5.4
	Fig. 4	220	AS 300/66	6.1
	Fig. 5	110	AS 120/19	1.6
	Fig. 6	110	AS 120/19	2.3
	Fig. 7	220	AS 300/39	3.3
	Fig. 8	220	AS 300/39	4.4
Anchor-angle (angle of rotation 0-60°)	Fig. 9	35, 110	AS 70/11-AS 240/32	5.3/7.5[1]
	Fig. 10	220	AS 300/39, AS 400/51	7.5/10.8
	Fig. 11	35, 110	AS 150/34	6.2/9.1
	Fig. 12	220	AS 300/66	9.8/13.6
	Fig. 13	110	AS 120/19	2/2.9
	Fig. 14	110	AS 120/19	4.1/5.2
	Fig. 15	220	AS 300/39	5.6/8.1
	Fig. 16	220	AS 300/39	8.9/12

[1]The weight of anchor-angle towers without base is given in the numerator, with the base in the denominator.

APPROVED FOR RELEASE: 2007/02/08: CIA-RDP82-00850R000200070049-9

APPROVED FOR RELEASE: 2007/02/08: CIA-RDP82-00850R000200070049-9

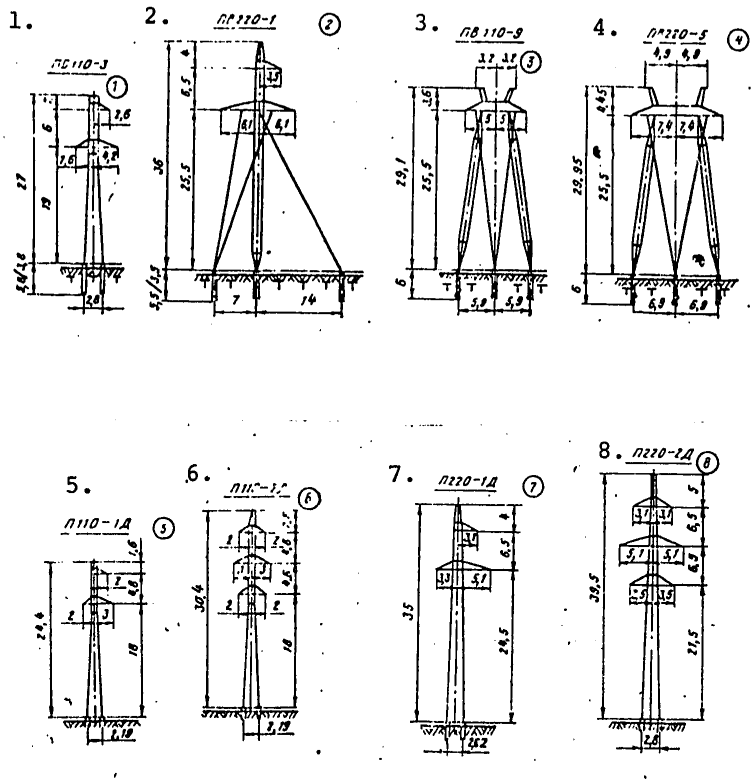

Key:

1. PV 110-3
2. PV 220-1
3. PV 110-9
4. PV 220-5
5. P110-1D
6. P110-2D
7. P220-1D
8. P220-2D

APPROVED FOR RELEASE: 2007/02/08: CIA-RDP82-00850R000200070049-9

APPROVED FOR RELEASE: 2007/02/08: CIA-RDP82-00850R000200070049-9

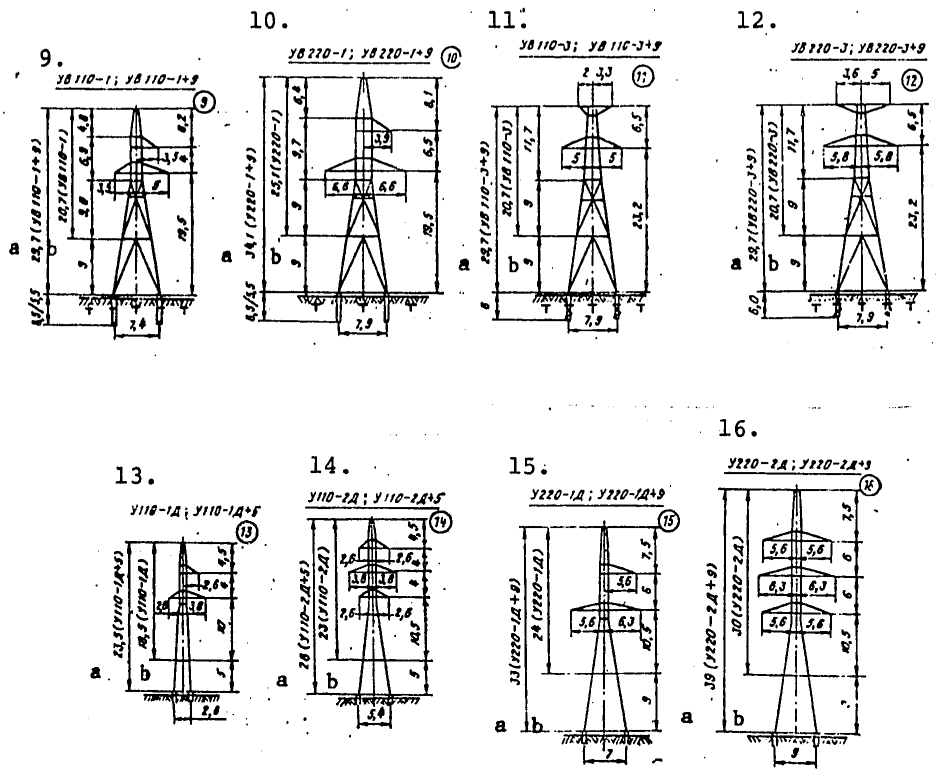

Key:

9. UV 110-1; UV 110-1+9
   a. UV 110-1+9
   b. UV 110-1
10. UV 220-1; UV 220-1+9
   a. U 220-1+9
   b. U 220-1
11. UV 110-3; UV 110-3+9
   a. UV 110-3+9
   b. UV 110-3
12. UV 220-3; UV 220-3+9
   a. UV 220-3+9
   b. UV 220-3
13. U 110-1D; U 110-1D+5
   a. U 110-1D+5
   b. U 110-1D
14. U 110-2D; U 110-2D+5
   a. U 110-2D+5
   b. U 110-2D
15. U 220-1D; U 220-1D+9
   a. U 220-1D+9
   b. U 220-1D
16. U 220-2D; U 220-2D+9
   a. U 220-2D+9
   b. U 220-2D

APPROVED FOR RELEASE: 2007/02/08: CIA-RDP82-00850R000200070049-9

APPROVED FOR RELEASE: 2007/02/08: CIA-RDP82-00850R000200070049-9

The height of the lower cross piece was taken as one meter less than in standardized towers to reduce the weight, a fact which will permit helicopters to be used. The standard cable sag of all the towers was reduced accordingly (by 1 meter) as well as was the distance between the cables, a fact which permitted us to further reduce the tower weight.

The increase in the voltages in the cables, in accordance with the "Specifications for Setting up Electrical Installations-76," permits us to obtain almost the same standard spans on the new towers as on the standardized ones.

The new towers are manufactured from low-alloy, high-strength class 46/33 steels, taking the basic area of their application into consideration (the estimated temperature of the coldest five-day period is from -40°C to -50°C), a fact which also permits us to reduce the tower weight.

Welding is done with E-42A electrodes; construction norms and specifications permit submerged-arc welding and welding in carbon dioxide. The use of bolts with a strength of 5.6 is specified for joining the sections and the cross pieces of the towers.

All of the towers under consideration are assembled from welded sections. The suspension, single-circuit and double-circuit towers for 110 kV OL as well as the single-circuit anchor-angle towers of normal height for 110 kV OL are narrow-based for the maximum possible reduction in weight. Their use is also advisable when they are to be transported by rail. However, when such towers are installed on their foundations, specific complexities may arise. In this case, it is advisable to use surface foundations.

The single-circuit elevated anchor-angle tower for 110 kV OL is mounted on a base (the width of the base at the foundation is 2.8 meters) which may be secured on mushroom shaped foundations or piles. The standard dimensions of the base are selected taking the restrictions imposed by rail transport into consideration.

The middle sections of double-circuit anchor-angle towers for 110 kV OL are also assembled taking these restrictions into consideration. The lower sections of the normal and elevated towers consist of four assembled elements which may be installed on mushroom shaped feet, piles or special foundations.

When the new design decisions were used, the weight of the single-circuit and double-circuit suspension towers for 110 kV OL as well as that for single circuit anchor-angle towers for 110 kV OL of normal height was not more than 2300 kilograms, permitting fully assembled towers to be transported by MI-aid helicopters. In 1980, the towers will be put into operation on the 110 kV OL Bavenda-Mogocha (REU [Regional Power Administration?] Chitaenergo). It is necessary to place a timely order for the required amount of rolled metal of the required shapes from class 46/33 steel to manufacture them.

APPROVED FOR RELEASE: 2007/02/08: CIA-RDP82-00850R000200070049-9

APPROVED FOR RELEASE: 2007/02/08: CIA-RDP82-00850R000200070049-9

The suspension single-circuit and the double-circuit towers for 220 kV OL are made from welded narrow-base sections, the dimensions of which do not exceed railroad size. It is possible to transport these towers using the MI-8 helicopter only in sections.

The anchor-angle towers for 220 kV OL both of normal height and the elevated ones have lower sections and bases made of 4 components. These towers may be mounted on any type of foundation or on piles; they also may be transported by helicopter only in sections.

The cross pieces of all of the anchor-angle towers are made with parallel booms and two molded pieces for suspending the double-circuit insulator chains. Single circuit insulator chains must be suspended on molded pieces placed at some distance from the tower trunk. It must be noted that the cross pieces of anchor-angle towers for 220 kV OL have molded pieces for hanging SK 16-1A brackets, i.e., for insulator chains without KGN-16-5 attaching units, simplifying the cross piece design. Standard insulator chains are suspended on the cross pieces of anchor-angle towers for 110 kV OL.

A comparative analysis of the new towers and the analog currently in use, standardized field towers, was performed when the new towers were being developed. The kinds of steel for the analog and the new tower were taken to be the same (class 46/33 steel) taking the low temperatures on the main part of the region under consideration into account.

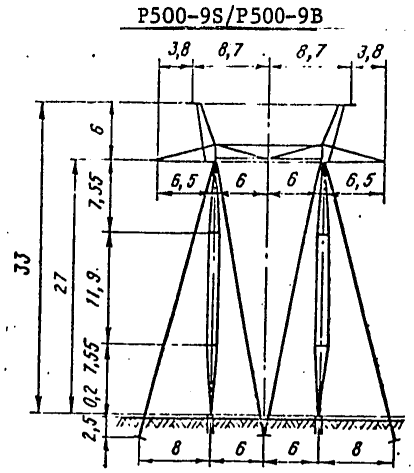

Figure 1. P500-9S (P500-9B) Suspension portal tower with guy lines for 500 kV OL

APPROVED FOR RELEASE: 2007/02/08: CIA-RDP82-00850R000200070049-9

APPROVED FOR RELEASE: 2007/02/08: CIA-RDP82-00850R000200070049-9

The economic efficiency from the use of the towers which were examined was calculated taking the following supposed scales of introduction into consideration: 100 km of single circuit and double circuit 110 kV OL and 200 km of 220 kV OL (i.e., 600 km per year in all). At such a volume of construction, the annual economic savings is about 2,100 tons of rolled metal, R 1 million of capital investments and 10,000 man-days of labor expenses.

An analysis of the various types of towers for 220 and 500 kV OL being erected in regions with particularly complex installation conditions was performed in the North-West Department of the Energoset'proyekt Institute, and blueprints for a new type of special suspension portal tower with guy wires were developed on the basis of their results (Figure 1).

Two vertical stands which may be installed separately are specified in the design. Each stand is separated by three guy lines, two of which are fastened to anchor slabs or piles on the axis of the electric-power transmission lines, while the third is fastened in a plane perpendicular to this axis, i.e., in the tower's transverse symmetry plane. Such a system insures effective distribution of forces in the tower elements. The stands are connected by a rigid cross bar supported in the middle by guide connecting rods. The presence of a rigid cross bar insures identical displacement of the upper ends of the stand. This permits the guy-wire base to be selected so that under given tension the stands are identically loaded.

When the tower stands are installed separately, the MI-8 helicopter may be used; when the assembled tower is being installed by pivoting it around installation hinges, the MI-6 helicopter is used.

Two tower variants have been proposed: a welded paintable one and a bolt one. In the first case the weight of the tower is 5,307 kg, in the second the weight of the tower without the zinc coating is 5,914 kg, and 6,105 kg with the zinc coating.

Estimation of the economic savings has shown that, given the anticipated volume of construction, the use of the new towers will permit a savings of R 820,000 in capital investments, 1,910 tons of rolled metal and about 10,500 man-days of labor costs per year.

The towers made from pipes for 35 and 110 kV OL which were developed by the North-West Department of the Energoset'proyekt Institute and which are being erected in the regions of western Siberia have specific features.

A series of single-circuit and double-circuit suspension and anchor-angle towers for 35 and 110 kV OL intended primarily for tower supply to petroleum- and gas-yields were accepted in the project in accordance with an agreement with the Zapsibelektroset'stroy Trust.

APPROVED FOR RELEASE: 2007/02/08: CIA-RDP82-00850R000200070049-9

APPROVED FOR RELEASE: 2007/02/08: CIA-RDP82-00850R000200070049-9

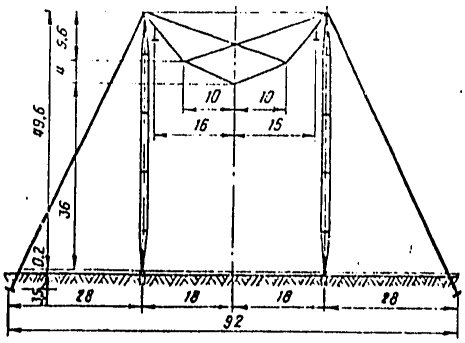

Figure 2. Portal tower with flexible crossbar

The use of sub-standard pipes 426, 402, and 325 mm in diameter as well as a small number of new pipes of smaller diameters is specified in the designs for towers of this series. The tower cross pieces are made from structural angles with dimensions 75x6, 63x5 and 50x4 mm.

The single-circuit and double-circuit suspension towers for 35 and 110 kV OL have been developed in several modifications, depending on the method for securing them in the ground:

--with a stand buried directly in a foundation;

--with a stand being installed on a pile or other type of foundation and secured by three guy wires which are also fastened onto piles or another type of foundation;

--with a stand merging into a 3-edged base for installation on surface foundation;

--with a 3-edged base for installation on floating foundations and with a stand and 3-sided base made entirely from substandard pipes 325 mm in diameter.

Introduction of the new tower series will provide for a significant economic savings, since the cost of substandard pipes and expenses for their delivery are inconsequential.

The portal tower with a flexible cross piece is among the first of the promising tower-design efforts. Towers of this type consist of two prismatic stands and a system of flexible connections, insuring the working position of the stands and the cable suspension. The stands may be vertical (Figure 2) or inclined. In the latter instance, the distance between their tops is greater than at the bottom.

The tower cross piece may be made from two span ties (the first taking on the shape of a funicular polygon after suspension of the cables and the

APPROVED FOR RELEASE: 2007/02/08: CIA-RDP82-00850R000200070049-9

APPROVED FOR RELEASE: 2007/02/08: CIA-RDP82-00850R000200070049-9

second being horizontal and fastened to the top of the stands) as well as angled ties connecting the suspension points of the individual stages with the tops of the stands. The stages may be suspended horizontally or with the extreme stages raised, thereby permitting the electrical parameters of the line to be improved.

The weight of the portal towers with a flexible cross piece is about half that of the lightest towers of other types.

It is first of all necessary to evaluate the mechanical strength of an electric power transmission line when exposed to the longitudinal loads which may arise given non-uniform ice-glaze deposits and cable breakage before putting towers with flexible cross pieces into operation, as well as to work out and master the procedures for installing cables on these towers.

The creation of new tower designs for the northern regions requires the application of modern methods for the optimization of tower parameters and lines being erected, using programs in "Fortran" which have been developed at the North-West Department of the Energoset'proyekt Institute. The weight or the cost of a tower, taking the foundations into consideration, is the minimizing criterion.

The program for designing suspension and anchor-angle towers for OL of any voltage is intended for the development of designs which are optimal in accordance with the appropriate criterion and which include units made from single angles. The variable parameters are the tower base, the size and the number of panels and the type of grid work.

The towers designed using the developed programs are more economical by 7-15 percent than the towers for which traditional methods were used without the mathematical-design equipment. Based on preliminary estimates, incorporation of the new towers on just 40 percent of the 110 and 220 kV OL being erected in the Northern Regions of the country will permit us to save 2,500 tons of rolled metal, 13,000 man-days of labor expenses and R 1.2 million of capital investments.

COPYRIGHT: Izdatel'stvo "Energiya", "Energeticheskoye stroitel'stvo", 1980

9194
CSO: 1822

APPROVED FOR RELEASE: 2007/02/08: CIA-RDP82-00850R000200070049-9

APPROVED FOR RELEASE: 2007/02/08: CIA-RDP82-00850R000200070049-9

ELECTRIC POWER

UDC 621.4.002.2

CONSTRUCTION OF 220-KV SUBSTATIONS IN NORTHERN CLIMES

Moscow ENERGETICHESKOYE STROITEL'STVO in Russian No 1, Jan 80 pp 52-54

[Article by Engineers S. A. Kolbin and A. M. Parkhomenko]

[Text] At the present time capital investments in the construction of substations in the northern regions of the country have grown significantly. Questions concerning improvements in the construction of such projects are urgent because of this fact. Let us examine certain trends for improving the efficiency of substation construction in northern regions based on the example of the designs and construction of the Yagodnoye Substation, located in the central region of Magadanskaya Oblast.

The Yagodnoye Substation Project was executed by the Siberian Department of Energoset'proyekt [All-union Order of the October Revolution State Planning and Surveying Scientific Research Institute of Power Systems and Power Supply Networks] Institute. Changes were made in the initial design during development of the start-up circuit with the aim of accelerating the project's being put into operation. The basic indicators of the substation are presented in the table.

The relative arrangement of the open 220 and 110 kV distribution units at a 90° angle which was specified by the design was determined by the direction of the line entries: a 220 kV overhead line (OL) from the north and a 110 kV OL from the east. The 220 and 110 kV open distribution units (ODU) were built in a circuit with two systems of bus bars with a transfer bus, which will permit expansion of the distribution units later on.

The synchronous compensators are situated in a covered space which is located between the autotransformers--the 6 kV closed distribution unit (CDU) and the 35 kV ODU, in series one after the other on the south side of the autotransformers.

The open start-up devices (OSD), water supply reservoirs, an open oil warehouse and a pump house are located on the eastern side of the substation.

APPROVED FOR RELEASE: 2007/02/08: CIA-RDP82-00850R000200070049-9

APPROVED FOR RELEASE: 2007/02/08: CIA-RDP82-00850R000200070049-9

Indicator	According to Confirmed Design	According to Start-up Complex
ATDTs TNG-63000/220:		
voltage, kV	220/110/6	220/110/6
power, MV·A	63	63
number	2	1
KS16-6UZ Synchronous compensator:		
voltage, kV	6.3	6.3
power, MV·A	16	16
number	2	1
TM-4000/35 transformers:		
voltage, kV	6/35	--
power, MV·A	4	--
number	1	--
Total estimated cost, thousands of rubles	6468	4551
Including:		
SMR [not further identified]	4524	3299
equipment	1241	861

The 220, 110 and 35 kV ODU are executed according to individual designs: the cable conduits (surface, made from UBK-1 troughs), according to a standardized design.

The construction work at the substation was done by the construction administration of the Kolymskaya GES and the electrical installation and wiring work and installation of doorways and standardized metal structures to accommodate equipment (UMO) was done by installation sector number 12 of the Elektrosibmontazh Trust. Construction of the substation was begun in 1967 and the first phase was put into operation in September 1977.

On the basis of the experience of constructing the Yagodnoye Substation, it is necessary to isolate a number of organizational and production process questions, on whose resolution the efficiency of constructing similar projects in regions of the Far North depends.

When designing substations rated at 220 kV and more, it is necessary first of all to take into consideration the specific features of the regions: difficult climatic conditions and arduous transport plans for delivering building materials and equipment. Only closed distribution units of 6-10 kV should be specified in the northern regions, it being desirable that they be combined with OSD buildings with the aim of reducing cable lines.

APPROVED FOR RELEASE: 2007/02/08: CIA-RDP82-00850R000200070049-9

APPROVED FOR RELEASE: 2007/02/08: CIA-RDP82-00850R000200070049-9

In recent years the question of rejecting combined portals has been widely discussed since the cost of operations during their installation is extremely high. The Energoset'proyekt Institute had to develop a standard 220-330 kV closed distribution unit equipped for an inspection of large transformers to solve this question. This type of design was incorporated by the Ural Department of the Teploelektroproyekt Institute when designing the 110 kV CDU at the Bilibinskaya Nuclear Heat and Electric Power Station.

The practice of installing and operating cable services in the Far North has shown that upon delivery to a construction unit in the winter time, or in the case of an accident, it is impossible to lay and connect the usual kinds of control cables being delivered at the present time.

The cabling should be specified exclusively as being of frost-proof design (the internal cable connections in the SDU and the OSD are exceptions).

The same thing holds for the equipment: It is designed for operation at -40°C and less frequently at -45°C. Equipment delivery is usually planned for the second quarter, but it arrives at the project in the third and fourth quarter when its accurate assembly and adjustment is impossible because of very low temperatures.

MKP-110 oil switches have been in use for a number of years at the REU Magadanenergo, and, beginning in 1978, U-220 switches. Technical and operational data from the manufacturer's certificate guarantee reliable operation of these switches only in a temperature range of from +40°C to -40°C and less frequently at -45°C. Furthermore, such switches are cumbersome; the volume of oil for the U-220 is 27 tons and 8 tons for the NKP-110. The difficult conditions of transporting them, the high cost for manufacturing foundations on permafrost soils, unreliable operation at low temperatures, and high labor expenses during the installation period, all of this indicates that it has long been necessary to convert to manufacture of low-volume oil switches in a northern design.

The possibility of using low-volume oil switches, in the opinion of the authors, would permit the Energoset'proyekt Institute to develop a standardized design for closed distribution units based on the type of the 220/110-35 kV Sinegor'ye Substation, at which HLR-245/2500 switches produced by the Swedish firm ASEA are in operation.

In 1977 an APDTs TNG-63000/220 autotransformer from the Moscow production association "Elektrozavod imini V. V. Kuybyshab" was installed at the Yagodnoye Substation. During the course of installation and operation of the autotransformer (and other similar devices) it was found that it is not designed for use under northern conditions: non frost-resistant rubber was installed on all of the connectors, the cut-off fittings were made from cast iron, the thermosiphon filters were practically incapable of functioning at low temperatures and there was no electric heat up in

APPROVED FOR RELEASE: 2007/02/08: CIA-RDP82-00850R000200070049-9

APPROVED FOR RELEASE: 2007/02/08: CIA-RDP82-00850R000200070049-9

the remote RPN [?mercury-arc rectifier unit?]. In association with this, it is necessary to deliver transformers (autotransformers) which have been specially developed for northern regions to the projects.

It is necessary to dwell particularly on designing oil facilities for large substations. Thus, open oil-storage facilities consisting of two 40 m^3 containers horizontally mounted on foundations were designed by the Siberian Department of Energoset'proyekt Institute for the Yagodnoye and Berelekh Substations. They should be of the closed type with the tanks mounted vertically and with a bottom heating unit to insure efficiency of the oil facilities under winter conditions.

In accordance with the decision of the USSR Glavtekhupravleniye of Minergo [Main Technical Administration for Use of Power Systems of the Ministry of Power Engineering and Electrification] for electrical equipment being duly put into operation and in use in the Far North, filling with ATM-65 (TU38-1-225-69) arctic oil, the pour point of which is -65°C, is specified. However, as a rule, arctic oil does not come to the building site. In connection with this, it was necessary to reprocess about 200 tons of transformer oil which resulted in nonproductive expenses.

This causes further difficulties during the period for installing and operating oil-field equipment at -50°C and below.

Installation of an SK-18 storage battery was specified by design at the Yagodnoye Substation. Its installation was also associated with a number of difficulties (in particular, it was necessary to organize the delivery of 5 tons of distilled water and 2 tons of sulfuric acid; furthermore, the storage battery housing which was built-into the OSD building with electric heating was an unsuccessful decision: at outside temperatures of -55°C and below the temperature in the battery housing chamber fell to 0°C.

Under these conditions, closed medium-voltage storage batteries are the most advisable. Under specific operating conditions (operation at constant recharging and charge at a voltage no higher than 2.3-2.35 v per element) such storage batteries may also be installed outside of the storage battery housing, and experience in using similar storage battery designs abroad for many years conclusively confirms such a possibility.

For exterior lighting of substations situated in regions of the Far North, the design institutes must specify xenon lamps of the "Serius" type rated at 5-10 kWt, which will sharply reduce the labor expenses for their installation and operation.

Thus, to improve the efficiency of substation construction in the northern regions of the country it is advisable for the Energoset'proyekt Institute to develop a standard design for 110-220 kV CDU using low-volume oil switches, interconnect the buildings to the maximum extent, use closed

APPROVED FOR RELEASE: 2007/02/08: CIA-RDP82-00850R000200070049-9

APPROVED FOR RELEASE: 2007/02/08: CIA-RDP82-00850R000200070049-9

SN type storage batteries, and use "Serius" lamps for exterior lighting. The Ministry of the Electrical Engineering Industry must develop and manufacture electrical equipment in a northern design and a frost resistant cable product.

COPYRIGHT: Izdatel'stvo "Energiya," "Energeticheskoye stroitel'stvo," 1980

9194
CSO: 1822

END

APPROVED FOR RELEASE: 2007/02/08: CIA-RDP82-00850R000200070049-9