APPROVED FOR RELEASE: 2007/02/08: CIA-RDP82-00850R000300070031-7

FOR OFFICIAL USE ONLY

JPRS L/9496

21 January 1981

East Europe Report

SCIENTIFIC AFFAIRS

(FOUO 1/81)

FBIS FOREIGN BROADCAST INFORMATION SERVICE

FOR OFFICIAL USE ONLY

APPROVED FOR RELEASE: 2007/02/08: CIA-RDP82-00850R000300070031-7

APPROVED FOR RELEASE: 2007/02/08: CIA-RDP82-00850R000300070031-7

NOTE

JPRS publications contain information primarily from foreign newspapers, periodicals and books, but also from news agency transmissions and broadcasts. Materials from foreign-language sources are translated; those from English-language sources are transcribed or reprinted, with the original phrasing and other characteristics retained.

Headlines, editorial reports, and material enclosed in brackets [] are supplied by JPRS. Processing indicators such as [Text] or [Excerpt] in the first line of each item, or following the last line of a brief, indicate how the original information was processed. Where no processing indicator is given, the information was summarized or extracted.

Unfamiliar names rendered phonetically or transliterated are enclosed in parentheses. Words or names preceded by a question mark and enclosed in parentheses were not clear in the original but have been supplied as appropriate in context. Other unattributed parenthetical notes within the body of an item originate with the source. Times within items are as given by source.

The contents of this publication in no way represent the policies, views or attitudes of the U.S. Government.

COPYRIGHT LAWS AND REGULATIONS GOVERNING OWNERSHIP OF MATERIALS REPRODUCED HEREIN REQUIRE THAT DISSEMINATION OF THIS PUBLICATION BE RESTRICTED FOR OFFICIAL USE ONLY.

APPROVED FOR RELEASE: 2007/02/08: CIA-RDP82-00850R000300070031-7

APPROVED FOR RELEASE: 2007/02/08: CIA-RDP82-00850R000300070031-7

JPRS L/9496

21 January 1981

EAST EUROPE REPORT

SCIENTIFIC AFFAIRS

(FOUO 1/81)

CONTENTS

CZECHOSLOVAKIA

CSSR Electrotechnical Industry Trends for Seventh Five-Year Plan
(Jiri Hrusa; ELECTROTECHNICKY OBZOR, Sep 80) 1

Steel Metallurgy in Production of Light Water Reactor Pressure Vessels
(Miloslav Kepka, et al.; HUTNIK, Sep 80) 6

APPROVED FOR RELEASE: 2007/02/08: CIA-RDP82-00850R000300070031-7

APPROVED FOR RELEASE: 2007/02/08: CIA-RDP82-00850R000300070031-7

CZECHOSLOVAKIA

CSSR ELECTROTECHNICAL INDUSTRY TRENDS FOR SEVENTH FIVE-YEAR PLAN

Prague ELECTROTECHNICKY OBZOR in Czech No 9, Sep 80 pp 513-515

[Article by Engineer Jiri Hrusa: "Czechoslovak Electrotechnical Industry in the Seventh Five-Year Plan"]

> [Text] Improvement of the effectiveness and efficiency of the nation's economy and achievement of savings in labor, materials and energy are a dominant order of the day in all recent decrees and measures of Czechoslovak party and Government agencies. We shall show how the electrotechnical industry can contribute to accomplishment of this task, and within this industry, particularly that portion which manufactures electronic components and equipment.

The electrotechnical industry, including the electronics and microelectronics industry, has constituted an independent industrial branch in this country as of 1 January of this year, administered by the new Federal Ministry of the Electrotechnical Industry, also established effective that date. Although at the present time the electrotechnical industry accounts for only 5.7 percent of our entire industrial output, it exerts a strong influence on a number of other industrial branches, because by improving the useful properties and qualities of its products, it substantially affects this country's overall consumption of materials and energy, the quality and technological level of final products of the machine building industry, their productivity, reliability and economy, which is steadily increasing their competitiveness and thus their sales potential in foreign markets.

In spite of its exceptional status, which will be discussed in greater detail below, and in spite of the fact that our electrotechnical industry employs somewhat more than 20 percent of the entire work force of Czechoslovak machine building (excluding metallurgical plants), it possesses only 13.8 percent of total fixed assets in machine building, and its share of overall machine building capital investment has been only 13.5 percent up to the present time. Other figures are also of interest: its share of our total industrial materials consumption is 4 percent, only 2.5 percent of fixed assets, and 1 percent of energy consumption. In spite of this fact, the electrotechnical industry generates more than 6 percent of the gross profits of our entire industry, and 9.6 percent of Czechoslovak export profits.

In spite of the above-mentioned small share of fixed assets and overall capital spending, in the period 1970-1980 the Czechoslovak electrotechnical industry achieved high output growth values, approximately 10.9 percent annually, which must

APPROVED FOR RELEASE: 2007/02/08: CIA-RDP82-00850R000300070031-7

APPROVED FOR RELEASE: 2007/02/08: CIA-RDP82-00850R000300070031-7

be considered a successful performance in comparison with the 8.2 percent growth in machine building output and 6.4 percent for Czechoslovak industry as a whole. Nevertheless, even with this high rate of output growth, production has not fully met demand, particularly in industrial consumption, but also in export and deliveries for the consumer goods inventory.

We could cite many examples of energy savings attainable with the assistance of the electrotechnical industry. According to a study by the State Energy Inspectorate, adoption of modern, sophisticated color TV sets with a semitoroidal picture tube (manufacture of which in Czechoslovakia will begin in 1982-83) will reduce average TV set power requirements from the present approximately 160 watts with a black-and-white picture tube to 90-100 watts with a new color TV set. One result will be that, during heavy TV viewing time, which occurs, for example, when the public is following important international sports events, etc, electric power demand will diminish by approximately 240 megawatts. Construction of this much generating capacity would require capital investment of approximately 1.5 billion korunas.

According to that same study, with total incorporation of electronics in our industry and transportation (that is, heavy-current and communications equipment), we could achieve direct savings of electricity in the amount of from 3600 to 6700 gigawatt hours annually, and in like manner the general public could achieve savings of from 570 to 1200 Gwh, that is, an overall national savings of from 4170 to 7900 Gwh!

Employment of electronics in textile equipment is another example. This would give the equipment user from 50 to 70 percent savings in labor, approximately 50 percent savings in occupied floor area, and approximately 20-30 percent decrease in machinery bulk, with higher output and faster programming of textile patterns.

In fourth-generation electronic private branch telephone exchanges, in which electronics has taken over the function of mechanical relays, production labor requirements would decrease, with a simultaneous decrease in production space requirements. Such exchanges would benefit the equipment user by reducing installation area, reducing required electric power input by 10-25 percent, decreasing stationary battery requirements by 25 percent, reducing installation time by 50 percent, and reducing maintenance costs to as little as 12 percent of the original figure.

Significant savings, as a rule accompanied by an improvement in product quality, can be achieved by automating various equipment and entire systems. The electrotechnical industry, through its products, is of determining influence in carrying out technological advances in various sectors of the economy, is significantly involved in all stages of the reproduction process, and puts its products into almost all branches and sectors of the production and nonproduction sphere. In addition, by supplying the consumer goods inventory it participates in satisfying the needs of our citizens, which in our type of society is considered a politically important task.

Total control system automation with the Czechoslovak-built RPP 16 computer installed at the Staric Mine in the Ostrava-Karvin Coal Basin is an example of increasing economic effectiveness by adopting automated control of an industrial process. The system involves energy management, mine transport control and record keeping, accident warning, recording keeping on employees, employee hours worked,

APPROVED FOR RELEASE: 2007/02/08: CIA-RDP82-00850R000300070031-7

APPROVED FOR RELEASE: 2007/02/08: CIA-RDP82-00850R000300070031-7

plus certain other operations. This automated system results in annual savings of 3 percent on energy and 38 million korunas in operating costs. Payback time for the investment made in this automated system is short -- only 2.4 years. The developed system has also been employed at other mines, but utilizing the new JSEP 1010 computer.

Here is another example. Studies indicate that a blast furnace automated control system will result in annual savings of more than 6,000 tons of coke, while at the same time increasing output by 12,000 tons of metal. Such a system on an electric arc furnace will result in annual savings of 17 million korunas, and in building materials production will reduce specific process fuel consumption by 4 percent. In the manufacture of cables and electrical insulation materials, with an average annual output volume of 2 billion korunas, the manufacturers will realize savings of 31 million korunas in manufacturing costs, customers will achieve savings of 69 million korunas, with annual savings of 21,000 tons of specific fuel and eliminating 53 jobs.

A high percentage share of Czechoslovak-manufactured electronic products and equipment in the overall required product mix has been characteristic of our national economy up to the present time. The figures for 1977 were 77 percent domestic manufacture and only 23 percent import. This ratio in a country of our size, and with the steadily shrinking time between the appearance of new innovations of necessity leads to a broad and scattered production program, low concentration of research and development activity in determining areas of development, a low level of manufacturing technology, etc. One consequence of this is poor manufacturing and export efficiency for the majority of electronic product items. Developed industrial countries with a comparable economic potential cover with domestic manufacture only a portion of the product mix and volume of domestic consumption (20 to 50 percent), while importing the remainder; the cost of large imports is covered by highly-efficient export of domestic-specialization product items.

The described situation has in this country resulted not only in a growing gap between consumption and production but also by a worsening lag by the Czechoslovak electronics industry behind world development.

Although at the time this article is being written (June 1980) the Seventh Five-Year Plan for development of the Czechoslovak national economy is not yet ready, nevertheless we can state its basic features. The production growth rate for the period 1985/80 has already been established at 144.7 percent for the Federal Ministry of the Electrotechnical Industry, which is the highest rate among all the machine building ministries (the figure is 138.8 percent for the Federal Ministry of Metallurgy and Heavy Industry, excluding metallurgical plants, and 135.0 percent for the Federal Ministry of General Engineering). Electrotechnical industry marketing activities will show a trend toward acceleration of the pace of export to nonsocialist countries, while at the same time maintaining the growth rate of exports to socialist countries. There will also be an increase in the percentage share of deliveries for capital construction and the consumer goods inventory.

Significant structural changes will take place throughout the entire branch encompassed by the Federal Ministry of Electrotechnical Industry, changes which will first and foremost ensure implementation of specific government programs. Priority, accelerated growth and development of the component manufacturing base of the

APPROVED FOR RELEASE: 2007/02/08: CIA-RDP82-00850R000300070031-7

APPROVED FOR RELEASE: 2007/02/08: CIA-RDP82-00850R000300070031-7

electronics and electrical equipment industry is the basic development priority of this branch and a specific government program. This applies particularly to solid-state and hybrid integrated circuits, discrete active components, passive components, but also applies to motors, mesomatrix system components, heavy-current devices, power capacitors, and a number of other components. More than half of all Ministry of Electrotechnical Industry capital spending in the Seventh Five-Year Plan is directed toward component manufacturing capability. Component manufacturing capability will grow particularly rapidly in microelectronics, which will more than double, accompanied by rapid growth in the percentage share of new product items. The VHJ TESLA Electronic Components Plant in Roznov will play a determining role in providing priority and progressive growth to electronic component manufacturing capability. Its rate of production growth is to exceed 190 percent in the period 1985/80. In 1985 from 70 to 80 percent of total output volume should be electronic components of new types.

It is anticipated that with a gradual transition to components with a higher degree of integration (microsystems), there will be a twofold increase in reliability of computer hardware in the course of the five-year plan, for example, with servicing and maintenance requests cut in half. Physical size will decrease to one tenth, and required electrical input will also drop, with computation performance capability remaining unchanged.

On the whole microprocessor control equipment will be making inroads in all sectors of the nation's economy in the course of the Seventh Five-Year Plan, which will make it possible to increase performance capability and utility value of machinery and equipment, with greater variability in products and manufacturing processes, and reduced specific consumption of energy and materials. The Czechoslovak electrical equipment industry, and particularly the electronics industry, possesses the prerequisites to act as a principal intensification factor in growth and development of the entire national economy if the requisite conditions are created for this, especially in the area of renovation and modernization of the production technology base.

In the business of exporting electronic components and equipment and in determining international division of labor with agreements pertaining to specialization and co-production in this branch of industry, it will be necessary to direct attention to the fact that electronics manufacture is generally demanding as regards short-supply materials such as costly, rare and noble metals, highly-pure raw materials, as well as certain plastics, which we import, and that more rapid development of international cooperation in this area is hindered by the narrow product mix in some countries, slow replacement of items by improved products, lag in design and, last but not least, sometimes an excessively inflexible price policy.

One can gain an idea of electronics industry export volumes from the fact that these exports in the Seventh Five-Year Plan just to socialist countries are to reach a sum of approximately 50 billion korunas in FOB prices.

Some of our electronic products are at a high level of quality and sophistication, such as analog integrated circuits, color decoder circuits, digigraphs or high-fidelity phonographs, which sell well even in the demanding Western European market. We are at the state of the art in other products, such as the BS 350 scanning electron microscope, which is comparable to products manufactured by the Japanese JEOL company.

APPROVED FOR RELEASE: 2007/02/08: CIA-RDP82-00850R000300070031-7

APPROVED FOR RELEASE: 2007/02/08: CIA-RDP82-00850R000300070031-7

Technological advances in electronics will be chiefly in the areas of advanced microelectronics, discrete components, as well as the development, innovation and application of advanced technologies, particularly iontophoresis and electronic lithography, as well as custom-made industrial process equipment. In all areas technological development will also be directed toward adoption of more effective measuring and test equipment, including the adoption of testing equipment of domestic manufacture.

In view of the high worldwide pace of innovation, we must shorten innovation cycles in electronics. Special attention will be focused on new products, not only electronic products but electrical engineering products in general, with the goal of these products comprising approximately half of our production in 1985.

The research and development facilities which this ministry has at its disposal cannot in all cases make up for delay in development and especially in technology with their own manpower and resources. Therefore it is necessary to keep up with the rapid rate of innovation by means of effective utilization of licenses. Within the framework of this decision, manufacture of color television sets on license will be introduced and gradually increased.

The ministry will understandably also direct technological development toward innovations in the heavy-current area of the electrotechnical industry. There, however, we shall be dealing with innovations of a different kind than in electronics and microelectronics, because there will be no change in choice of physical principles employed. Manufacturing innovation in heavy-current electrical engineering will involve primarily only better utilization of active materials and magnetic fields, utilization of improved insulating materials, also distinguished by better heat transfer, improved removal of dissipative heat, etc, as well as more up-to-date manufacturing processes. There will also be changes in rotary and non-rotary electrical equipment, electrical instruments and switchboards, cables and conductors. There will occur innovation in a great many rotary machines, particularly induction motors. A number of pulse-controlled motors will be developed, and there will be improvement in DC motors designed to be connected to regulated solid-state converters. The modular principle will be applied to electrical equipment and control panels, and solid-insulation control panels will be introduced. Employment of sulfur hexafluoride for putting out the arc will continue to be developed for outdoor circuit breaker devices, and the same principle will be employed in independent outdoor circuit breakers. In the low-voltage equipment area there will be continued an upgrading especially of heavy-series contactors in the effort to achieve substantial savings in materials. Other innovations will include static power sources for welding, and industrial heating with employment of power and control electronics. In power and communication cables there will be a changeover to designs employing layered PVC and PE insulation.

Medical industry equipment for X-raying, cardiostimulation, electrocardiography, stomatology, radiology, etc, will also be upgraded through innovation. Employment of electronics in health care equipment will make it possible to introduce automation to health care, in some cases involving computer hardware as well.

The tasks and obligations of the electrotechnical industry in our economy are thus quite extensive, important, and one might even say of key significance. Establishment of the new Federal Ministry of Electrotechnical Industry is a good precondition for achieving the stated goals.

Prague, 24 June 1980

COPYRIGHT: SNTL, Nakladatelstvi Technicke Literatury, Prague, 1980

3024

CSO: 2402

APPROVED FOR RELEASE: 2007/02/08: CIA-RDP82-00850R000300070031-7

APPROVED FOR RELEASE: 2007/02/08: CIA-RDP82-00850R000300070031-7

CZECHOSLOVAKIA

STEEL METALLURGY IN PRODUCTION OF LIGHT WATER REACTOR PRESSURE VESSELS

Prague HUTNIK in Czech Sep 80 pp 323-326

[Article by Ing. Miloslav Kepka, CSc, Ing. Jiri Mocek, CSc, and Ing Lydie Barackova, Central Research Institute, Skoda, Plzen: "Steel Metallurgy for Pressure Vessels of Light Water Reactors"]

[Text] Steels for nuclear reactor pressure vessels. Foreign steelmaking metallurgy. Producing ingots for pressure vessels at Skoda Plzen sectoral enterprise. Core purity of large-mass ingots.

The Skoda Plzen sectoral enterprise was assigned the job, within the framework of the nuclear program, to build pressure vessels for VVER nuclear reactors. The pressure vessel of a nuclear reactor is the most critical element of the entire primary circuit, and 100 percent operational safety is essential for the entire service life of the nuclear power generating plant, that is, from 30 to 40 years. It is necessary to achieve required stress-strain properties at operating pressures and temperatures, resistance to brittle fracture, resistance to development of cracks during cyclic stresses, good weldability, capability to face with stainless steel to prevent corrosion, and resistance to radiation damage. In view of these demands, a high degree of purity is essential (low content of gases, nonmetallic inclusions, harmful and associated elements), and special procedures are required in the area of steel metallurgy, that is, selection of charge materials and employment of out-of-furnace steel refining techniques (vacuum treatment).

Steels for Nuclear Reactor Pressure Vessels

Various grades of steels are employed for light-water reactor pressure vessels (Table I). MnNiMo and CrNiMo steels are used in capitalist countries, while CrMoV steels are used in the USSR and in this country, and a changeover is also being made to CrNiMo. The content of harmful and associated elements is limited in this steel, especially in the core area (Table II).

Foreign Steelmaking Metallurgy for Nuclear Reactor Pressure Vessels

Forging ingots weighing up to 500 tons are presently being cast in Japan for manufacturing pressure vessel rings [1]. Both acid and basic open hearth steel is used to cast these ingots, but the world's leading producers of forging ingots for pressure vessels use electric furnace steel exclusively [1]. For the most part vacuum casting of ingots is employed.

APPROVED FOR RELEASE: 2007/02/08: CIA-RDP82-00850R000300070031-7

APPROVED FOR RELEASE: 2007/02/08: CIA-RDP82-00850R000300070031-7

Table I. Chemical Composition of Steels for Pressure Vessels

Druh oceli 1	Stát 2	Značka oceli 3	Výrobek 4	Obsah [%] 5									
				C	Si	Mn	P	S	Cr	Ni	Mo	V	Cu
MnNiMo	USA, 6 Francie	A 533-B třída (9)	plechy 10 výkovky 11	max. 0,25	0,15 0,30	1,15 1,50	max. 0,012	max. 0.015	—	0,40 0,70	0,45 0.60	—	max. 0,10
	USA, Francie	A 508 třída 3	plechy výkovky 12	0,15 0,25	0,15 0,35	1,20 1,50	max. 0,025	max. 0,025	—	0,40 0,80	0,45 0,60	max. 0,05	max. 0,10
	NSR, 7 Japonsko	20MnMoNi55	výkovky	0,17 0,25	0,15 0,30	1,15 1,50	max. 0,010	max. 0,010	max. 0,20	0,40 0,70	0,40 0,60	max. 0,03	max. 0,10
	NSR, Japonsko	22NiMoCr37	výkovky	0,17 0.25	0,15 0,35	0,50 1,00	max. 0,010	max. 0.010	0,30 0,50	0,50 1,00	0,60 0,80	max. 0,05	max. 0,10
CrMoV	SSSR 8	15CH2MFA	výkovky	0,13 0,18	0,17 0,37	0,30 0,60	max. 0.025	max. 0,025	2,50 3,00	max. 0,40	0,60 0,80	0,25 0,35	max. 0,15
		18CH2MFA	výkovky	0,16 0,21	0,17 0 37	0,30 0 60	max. 0,025	max. 0,025	2,50 3,00	max. 0,40	0,60 0,80	0,25 0,35	max. 0,15
		25CH2MFA	výkovky	0,22 0,27	0,17 0,37	0,30 0.60	max. 0,025	max. 0,025	2,80 3,30	max. 0,40	0,60 0,80	0,25 0,35	max. 0,15
CrNiMo	SSSR	15CH2NMFA	výkovky	0,13 0,18	0,17 0,37	0,30 0,60	max. 0,020	max. 0,020	1,70 2,40	1,00 1,50	0,50 0,70	max. 0,12	max. 0,15
		15CH2NMFAA	výkovky	0,13 0,18	0,17 0,38	0,30 0,60	max. 0,012	max. 0,010	1,70 2,4	1,00 1,50	0,50 0,70	max. 0,12	max. 0,10
	USA	A 543	výkovky	max. 0,23	0,20 0,35	max. 0,40	max. 0,010	max. 0,010	1,50 2,00	3,00 4,00	0,45 0,60	max. 0,03	max. 0,10

Key:
1. Steel
2. Country
3. Designation
4. Product
5. Content
6. France
7. Japan
8. USSR
9. Class
10. Plates, sheets
11. Structural shapes
12. Forgings

Table II. Maximum Content of Harmful and Associated Elements in Steel for Pressure Vessels (%)

	P	S	Cu	Co	As	Sb	Sn
Tlaková nádoba (1)	0,025	0,025	0,15	0,020	0,050	—	—
Aktivní pásmo tlakové nádoby (2)	0,010	0,012	0,10	0,020	0,010	0,005	0,005

Key:
1. Pressure vessel
2. Pressure vessel core area

Note: The sum of P + Sn +Sb should not exceed 0.015%.

APPROVED FOR RELEASE: 2007/02/08: CIA-RDP82-00850R000300070031-7

APPROVED FOR RELEASE: 2007/02/08: CIA-RDP82-00850R000300070031-7

In Japan, at the Muroran Plant of Japan Steel Works, large-mass forging ingots for pressure vessel rings are made of electric furnace steel, with the ingot vacuum-cast in a cooling water jacket. The steel mill has available two 100-120 ton electric furnaces, and two 10 and 25 ton electric furnaces. Two holding furnaces are used to hold the steel at temperature. This furnace capacity makes it possible to run up to 500 tons of molten metal. Electric furnace steelmaking with vacuum casting ingots makes it possible, with employment of high-purity charge materials, to attain a very low content of gases, sulfur, phosphorus and attendant impurities (Cu, Sn, Sb, As, Co) in the steel.

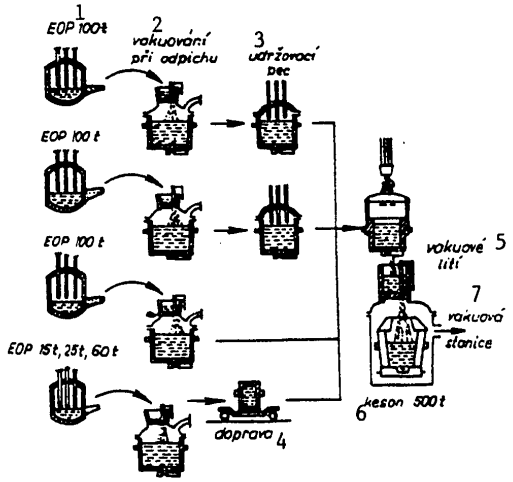

Figure 1. Five Hundred Ton Ingot Production Diagram (Kobe Steeel)

Key:

1. Electric furnace
2. Vacuum tapping
3. Holding furnace
4. Transport
5. Vacuum casting
6. 500 ton cooling water jacket
7. Vacuum unit

Another Japanese firm, Kobe Steel, which is also producing pressure vessel ring forgings, and is building and putting into operation 100 ton electric furnaces, with two 100 ton holding furnaces (ladles), can also produce ingots weighing up to 500 tons (Figure 1). These ingots are produced by three melts of steel in a 100 ton electric furnace (the furnace can take up to 130 tons), with the remainder of the steel up to the required mass produced in other electric furnaces (15, 25, and 60 ton). In order to achieve maximum reduction in gas content, the steel is subjected to a vacuum when tapped from the electric furnace. Securement of a sufficiently high casting temperature to the steel until the additional melts are produced in the 100 ton electric furnace required for casting a 500 ton ingot, is achieved by heating with an electric arc in holding furnaces [2].

APPROVED FOR RELEASE: 2007/02/08: CIA-RDP82-00850R000300070031-7

APPROVED FOR RELEASE: 2007/02/08: CIA-RDP82-00850R000300070031-7

The steel is poured into a cooling water jacketed ingot mold with a very low vacuum. With this process the steel is vacuum-treated twice, thus achieving high-quality steel. Employment of large ingots for forging rings in the manufacture of pressure vessels substantially reduces the number of welds, increases pressure vessel reliability, and there is less requirement for weld quality inspection both during pressure vessel manufacture and during periodic inspections.

In the USSR ingots up to 130 tons of molten steel are produced by a duplex process (basic and acid open hearth furnace), with the steel finish-processed in an acid open hearth furnace. For larger ingots, up to 165 tons, steel from an electric furnace is added to the upper part of the ingot. The ingot is vacuum-cast. ASEA-SKF vacuum and heating equipment (2 x 150 t) was put into test operation in 1976 at the Izhorskiy Plant in the USSR, to produce a larger ingot (up to 300 tons). The ASEA-SKF installation, in contrast to units currently being manufactured, has two independent units for heating and refining, with only vacuum treatment in common. Steelmaking in ASEA-SKF units will make it possible, without time restrictions, to perform excellent alloying, degassing and desulfurization of the steel bath and to cast ingots up to 300 tons in size.

Starting up Production of Ingots for Pressure Vessels at Skoda Plzen Sectoral Enterprise

In order to produce large forging ingots for pressure vessel components, it was necessary to test out at the Skoda Plzen sectoral enterprise steel plant a metallurgical process which would utilize existing basic furnaces, electric furnaces, and steel vacuum casting equipment. An alloy charge, which contains all alloying elements with a greater affinity for oxygen than that of iron, is melted in an electric furnace, while rimmed steel is prepared in an open hearth furnace. The alloy melt is poured into the ladle together with reducing slag, and the rimmed steel from the open hearth furnace is then added to this melt. After these two fundamental molten components are combined, the steel is vacuum-cast via an intermediate ladle into a cooling water jacketed ingot mold. The process is shown schematically in Figure 2, which also shows the composition of the individual furnace units for different sizes of cast ingots. In view of high metallurgical purity demands on steel for pressure vessels (primarily minimal content of harmful and associated elements), with this process it is necessary to take care in preparing the basic charge for both types of furnace. Utilization of PVK high-quality pig iron and premelted ingots has proven effective. In all examined melts the content of associated elements (Cu, Sn, Sb, As, and Co) was the result of the above-specified pure charge materials within the limits of prescribed chemical composition. Oxygen content at the end of the individual melts ranged up to a maximum of 160 ppm, while after vacuum casting, oxygen content declined to 40-60 ppm, which constitutes high-purity steel. After casting, the ingots are transferred while still warm to the Vitkovice sectoral enterprise for forging on a 120 MN press.

Through the influence of physico-chemical processes, there occurs macrostructural and chemical inhomogeneity during solidification of large-mass forging ingots, inhomogeneity which cannot be suppressed even with ingot vacuum casting. The macrostructure of a forging ingot consists of zones of equiaxial and dendritic crystals in the peripheral portion of the ingot. A and V segregations are typical of the central portion of a large-mass forging ingot. The heel portion is characterized by a negatively segregated zone and a settling cone, while the head portion of the ingot is characterized by a positively segregated zone and internal shrinkage. To

APPROVED FOR RELEASE: 2007/02/08: CIA-RDP82-00850R000300070031-7

APPROVED FOR RELEASE: 2007/02/08: CIA-RDP82-00850R000300070031-7

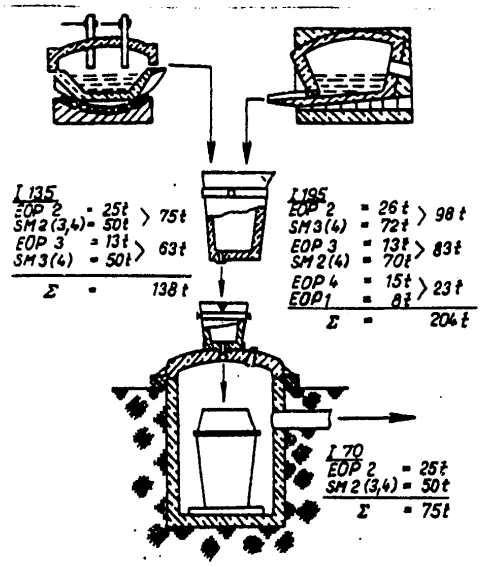

Figure 2. Schematic diagram of production of ingots for nuclear reactor pressure vessels at Skoda Plzen sectoral enterprise

Table III. Chemical Composition of Specimens of CrMoV Steel Taken From the Core of 135 Ton Ingots (%)

		C	Mn	Si	P	S	Cr	Ni	Mo	V
Požadované chemické složení (1)		0,11 0,20	0,25 0,65	0,12 0,42	max. 0,025	max. 0,025	2,40 3,10	max. 0,40	0,55 0,85	0,20 0,40
Zjištěné hodnoty (2)	minimální	0,11	0,46	0,19	0,007	0,009	2,82	0,05	0,59	0,30
	maximální	0,31	0,58	0,25	0,028	0,049	3,09	0,07	0,76	0,36

Key:
1. Required chemical composition 2. Determined values

evaluate the metallurgical quality of CrMoV steel to be used for a pressure vessel, the axial portion of a 135 ton ingot 2050 mm in diameter was selected. Following forge separation of the heel, the specimen was obtained by cutting out an interior speciment 324 mm in diameter and 3360 mm in overall length. The ingot core was divided axially and radially and was tested at nine locations along the axis and on the periphery. Comparison of the guideline chemical composition and a melt analysis with the results of chemical analysis of a total of 18 selected specimens indicated that homogeneity of chemical composition in the ingot core is quite good, with the exception of the carbon and sulfur content (Table III).

Carbon content increased in the head portion of the ingot core at a distance of approximately 2700 mm from the bottom portion of the ingot. At a height of 3070 mm in the ingot body carbon content increased to 0.22-0.31 percent C, with 0.11-0.13

APPROVED FOR RELEASE: 2007/02/08: CIA-RDP82-00850R000300070031-7

APPROVED FOR RELEASE: 2007/02/08: CIA-RDP82-00850R000300070031-7

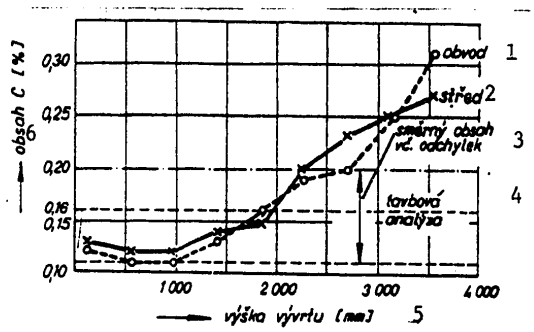

Figure 3. Carbon content curve based on core height, 135 ton ingot

Key:

1. Periphery
2. Middle
3. Guide content, including deviations
4. Melt analysis
5. Core height (mm)
6. Carbon content

percent content in the heel portion. Guideline chemical composition prescribes carbon content, including allowable deviations, ranging from 0.11 to 0.20 percent C. An elevated sulfur content of 0.024 was also established at the same height in the ingot core, in comparison with the other portions of the ingot core and by melt analysis, which had a content of 0.020 percent S. Content exceeding the allowable content above 0.030 percent S was recorded in the head portion of the ingot. Figures 3 and 4 contain more detailed results.

Oxide inclusions were determined in 18 core specimens by chemical phase analysis methods. Overall content of oxides, with the exception of a specimen taken from the heel portion of the ingot core, ranged from 40 to 115 ppm; these figures occur in high-purity steel.

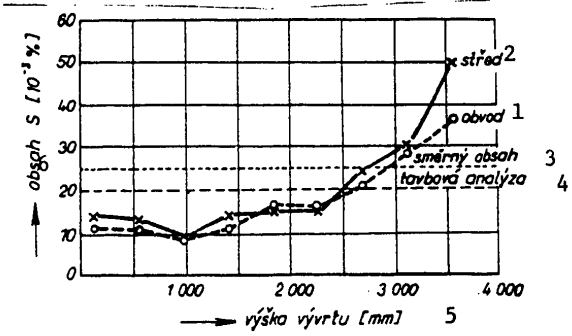

Figure 4. Sulfur content curve based on core height, 135 ton ingot

Key: See Key to Figure 3.

The exceptionally high oxide inclusion content of 311 ppm determined in a specimen taken from the heel portion of the ingot core attests to the presence of a large

APPROVED FOR RELEASE: 2007/02/08: CIA-RDP82-00850R000300070031-7

APPROVED FOR RELEASE: 2007/02/08: CIA-RDP82-00850R000300070031-7

agglomerate of such inclusions in the settling cone. The evaluation indicates the presence of defects in the central portion of a 135 ton ingot, which in the head portion extend at least to a distance of 1850 mm from the heel end of the ingot. Inhomogeneities and defects occurring in an ingot are eliminated by drilling or punching out the axial portion of the ingot.

Conclusion

High-purity steel with a very low content of harmful (P, S) and associated (Cu, Co, As, Sn, Sb) elements, gases (H_2, O_2, N_2), and nonmetallic inclusions is required for the manufacture of nuclear reactor pressure vessels. In order to ensure high-purity steel it is necessary to utilize pure charge raw materials and vacuum processing of the steel. Prior to forging pressure vessel rings it is necessary to remove not only a fairly large heel and head portion of the ingot, but also its central portion, which contains a higher level of impurities and inhomogeneous structure.

COPYRIGHT: SNTL, Nakladatelstvi Technicke Literatury, Prague, 1980

8817
CSO: 2402 END

APPROVED FOR RELEASE: 2007/02/08: CIA-RDP82-00850R000300070031-7