APPROVED FOR RELEASE: 2007/02/08: CIA-RDP82-00850R000300090014-4

FOR OFFICIAL USE ONLY

JPRS L/9592

6 March 1981

... FBIS 40TH YEAR 1941-81 ...

Translation

ELECTRIC POWER

Reference Book for High-Voltage Electric Power Plants;

Revised and Updated

By

I.A. Baumshteyn and M.V. Khomyakov

FBIS FOREIGN BROADCAST INFORMATION SERVICE

FOR OFFICIAL USE ONLY

APPROVED FOR RELEASE: 2007/02/08: CIA-RDP82-00850R000300090014-4

APPROVED FOR RELEASE: 2007/02/08: CIA-RDP82-00850R000300090014-4

NOTE

JPRS publications contain information primarily from foreign newspapers, periodicals and books, but also from news agency transmissions and broadcasts. Materials from foreign-language sources are translated; those from English-language sources are transcribed or reprinted, with the original phrasing and other characteristics retained.

Headlines, editorial reports, and material enclosed in brackets [] are supplied by JPRS. Processing indicators such as [Text] or [Excerpt] in the first line of each item, or following the last line of a brief, indicate how the original information was processed. Where no processing indicator is given, the information was summarized or extracted.

Unfamiliar names rendered phonetically or transliterated are enclosed in parentheses. Words or names preceded by a question mark and enclosed in parentheses were not clear in the original but have been supplied as appropriate in context. Other unattributed parenthetical notes within the body of an item originate with the source. Times within items are as given by source.

The contents of this publication in no way represent the policies, views or attitudes of the U.S. Government.

COPYRIGHT LAWS AND REGULATIONS GOVERNING OWNERSHIP OF MATERIALS REPRODUCED HEREIN REQUIRE THAT DISSEMINATION OF THIS PUBLICATION BE RESTRICTED FOR OFFICIAL USE ONLY.

APPROVED FOR RELEASE: 2007/02/08: CIA-RDP82-00850R000300090014-4

APPROVED FOR RELEASE: 2007/02/08: CIA-RDP82-00850R000300090014-4

FOREIGN BROADCAST INFORMATION SERVICE
P. O. Box 2604
Washington, D. C. 20013

26 February 1981

NOTE FROM THE DIRECTOR, FBIS:

Forty years ago, the U.S. Government inaugurated a new service to monitor foreign public broadcasts. A few years later a similar group was established to exploit the foreign press. From the merger of these organizations evolved the present-day FBIS. Our constant goal throughout has been to provide our readers with rapid, accurate, and comprehensive reporting from the public media worldwide.

On behalf of all of us in FBIS I wish to express appreciation to our readers who have guided our efforts throughout the years.

APPROVED FOR RELEASE: 2007/02/08: CIA-RDP82-00850R000300090014-4

APPROVED FOR RELEASE: 2007/02/08: CIA-RDP82-00850R000300090014-4

JPRS L/9592

6 March 1981

ELECTRIC POWER

REFERENCE BOOK FOR HIGH-VOLTAGE ELECTRIC POWER PLANTS; REVISED AND UPDATED

Moscow SPRAVOCHNIK PO ELEKTRICHESKIKH USTANOVKAM VYSOKOGO NAPRYAZHENIYA (MANUAL ON HIGH-VOLTAGE ELECTRIC POWER PLANTS) in Russian 1974 signed to press 1 Jan 74 pp 2, 3-4, 247-320

[Annotation, table of contents and section four from book by Isaak Abramovich Baumshteyn and Mikhail Vasil'yevich Khomyakov, Energiya, 25,000 copies, 568 pages, UDC 621.31.027.3(031)]

CONTENTS

Annotation and Table of Contents of the book..... 1

Section Four. High-tension Overhead Electric Transmission Lines..... 5
4.1 Classification of Overhead Lines With Respect to the Rated Voltage..... 5
4.2 Estimated Climatic Conditions..... 6
4.2.1. Normal Velocity Head (Velocity) of the Wind..... 6
4.3 Basic Specifications for Line Right of Way and for Crossing Various Facilities..... 11
4.3.1 Basic Specifications..... 11
4.3.2 Overhead Electric Transmission Lines Which Intersect One Another..... 23
4.4 Towers and Foundations..... 24
4.4.1 Design Diagrams of Loads on the Towers..... 24
4.4.2 Standardized 6 to 10-kV Towers..... 37
4.4.3 Standardized 35-kV Wooden Towers..... 40
4.4.4 Standardized 110-kV Wooden Towers..... 44
4.4.5 Semifinished-log and Half-rail Cross-pieces for 35 to 110 k-V Wooden Towers..... 50
4.4.6 Standardized 220-kV Wooden Towers..... 52
4.4.7 Standardized 35-kV Reinforced-concrete Towers..... 60
4.4.8 Standardized 110-kV Reinforced-concrete Towers..... 64
4.4.9 Standardized 150-kV Reinforced-concrete Towers..... 68
4.4.10 Standardized 220 and 330-kV Reinforced-concrete Towers..... 70
4.4.11 Standardized 500-kV Reinforced-concrete Towers..... 72

[II - USSR - FOUO]
[III - USSR - 37 FOUO]

APPROVED FOR RELEASE: 2007/02/08: CIA-RDP82-00850R000300090014-4

APPROVED FOR RELEASE: 2007/02/08: CIA-RDP82-00850R000300090014-4

4.4.12 Standardized 35-kV Steel Towers..... 74
4.4.13 Standardized 110-kV Steel Towers..... 81
4.4.14 Standardized 150-kV Steel Towers..... 86
4.4.15 Standardized 220-kV Steel Towers..... 88
4.4.16 Standardized 330-kV Steel Towers..... 91
4.4.17 Standard 500-kV Steel Towers..... 97
4.4.18 750-kV Steel Towers..... 103
4.4.19 Volume of Round Timber (Logs) Used for Overhead-line Towers and Communications Lines, m^3 (State Standard 2708-44*. Revised With Changes Introduced Into the Standard. September 1960)..... 106

APPROVED FOR RELEASE: 2007/02/08: CIA-RDP82-00850R000300090014-4

APPROVED FOR RELEASE: 2007/02/08: CIA-RDP82-00850R000300090014-4

[Annotation, table of contents and section four from book by Isaak Abramovich Baumshteyn and Mikhail Vasil'yevich Khomyakov, Energiya, 25,000 copies, 568 pages]

[Excerpts] This edition is a revised reference book for high-voltage electrical networks, supplemented with a section entitled "Rotary Machinery" and other information. This reference book has been compiled according to data from current standards, catalogs, instructions, guidelines, operating instructions, safety regulations and according to some data acquired during the operation of power systems.

This reference book is intended for engineers and technicians who operate the electrical portion of stations, substations and 3 to 750-kV lines. It is also helpful for senior technical personnel at project-planning, design and installation organizations.

Contents

		Page
Foreword		5
Section One		
General Reference Data		
1-1.	International System of Units (SI)	6
1-2.	Letter notations for principal electrotechnical and general-technical values (State Standards 1494-61 and 1943-47)	11
1-3.	Graphic symbols in electrical circuit diagrams	12
1-4.	Construction materials	17
1-5.	Conductors	19
1-6.	Lubricating oils and greases	21
1-7.	Lacquers and paints	24
1-8.	Sheathing compounds	30
1-9.	Filling and impregnating compounds	31
1-10.	Glues and sealing compounds	33
1-11.	Insulators	34

APPROVED FOR RELEASE: 2007/02/08: CIA-RDP82-00850R000300090014-4

APPROVED FOR RELEASE: 2007/02/08: CIA-RDP82-00850R000300090014-4

Section Two
Rotary Electric Machinery (Generators, Synchronous Phase Modifiers, Electric Motors)

2-1. Basic requirements of rotary electric machinery. 47
2-2. Coolant. Types of ventilation and the degree of protection. . . . 50
2-3. Turbogenerators 52
2-4. Hydroelectric generators 65
2-5. Synchronous phase modifiers 77
2-6. Equipment for suppressing synchronous phase-modifier fields. . . . 81
2-7. Gas utilization and control in water-cooled turbogenerators and synchronous phase modifiers and the properties of turbine oils . . 82
2-8. Electric motors 87
2-9. Electric brushes 109
2-10. Basic data for the operation of rotary machinery 111
2-11. Drying electric machinery 118
2-12. Operational testing of electric machinery. 119

Section Three
Substation Switching Equipment

3-1. Types of substations. 128
3-2. Power transformers 130
3-3. Basic data on voltage transformers 158
3-4. Grounding arc-suppressor coils 160
3-5. High-voltage circuit breakers. 166
3-6. Circuit-breaker actuators 174
3-7. Compressor units 176
3-8. Characteristics of disconnectors. 177
3-9. Isolator switches and short-circuiting devices 179
3-10. Fuses. 181
3-11. Reactors. 185
3-12. Basic data on current transformers 187
3-13. Paper-oil capacitors. 188
3-14. Contacts. 189
3-15. Disconnector and circuit-breaker interlock apparatus 194
3-16. Busbars and fittings. 196
3-17. Insulators 200
3-18. Oils and their use 211
3-19. Repair and testing of equipment 219
3-20. Equipment and instruments for routine testing 233
3-21. Direct-current sources 243
3-22. High-frequency traps. 245

Section Four
High-voltage Overhead Electric Transmission Lines

4-1. Classification of overhead lines with respect to the rated voltage . 247
4-2. Estimated climatic conditions. 248
4-3. Basic specifications for line right of way and for crossing various facilities 251

APPROVED FOR RELEASE: 2007/02/08: CIA-RDP82-00850R000300090014-4

APPROVED FOR RELEASE: 2007/02/08: CIA-RDP82-00850R000300090014-4

4-4. Towers and foundations 260
4-5. Conductors and lightning-protection cables 331
4-6. Line insulation 340
4-7. Line fittings 349
4-8. Operation and repair of overhead lines. 375
4-9. Determining the distance from the substation to a damaged area on the line 389

Section Five
Cable Lines

5-1. Power and control cables. Basic data 391
5-2. Oil-filled cables. 397
5-3. Electrical characteristics of power cables 399
5-4. Maximum allowable current loads for power cables 403
5-5. Cable-jointing devices 407
5-6. Installing cable joints. 429
5-7. Routine testing of cable lines 432
5-8. Determining the location of damage on cable lines 433
5-9. Stray-current protection systems. 434

Section Six
Overload Protection

6-1. Maximum operating voltages and estimated frequency of switching overloads on 3 to 750-kV electric networks. 436
6-2. Discharge voltages 436
6-3. Surge resistance and switching-overload resistance of wood-porcelain compound insulators when the length of the wood is 3-4 m 437
6-4. Test surge voltages for electrical equipment with normal insulation . 439
6-5. Maximum insulating distances in air on overhead-line towers. . . . 440
6-6. Maximum momentary voltage rise at 50 Hz for electrical equipment of 330 to 750-kV capacity 440
6-7. Parameters for single-circuit 110 to 750-kV overhead lines used when assessing switching overloads 441
6-8. Self-quench conditions for an open electric arc, depending upon its initial length and current 441
6-9. Spark-gap arresters 442
6-10. Protective coordinating gaps 449
6-11. Protection of power transformer insulation 449
6-12. Lightning-resistance characteristics of 35 to 750-kV overhead lines . 450
6-13. Grounding layout 450
6-14. Lightning protection of overhead lines. 456
6-15. Substation lightning-protection circuits 457

Section Seven
Protective Relays, Automated Equipment, Remote-control Devices and Measuring Instruments

A. Protective Relays and Automated Equipment

APPROVED FOR RELEASE: 2007/02/08: CIA-RDP82-00850R000300090014-4

APPROVED FOR RELEASE: 2007/02/08: CIA-RDP82-00850R000300090014-4

7-1. Current relays. 464
7-2. Voltage relays. 470
7-3. Power relays 474
7-4. Timer relays 477
7-5. RP intermediate electromagnetic relays. 480
7-6. RU-21 and BRU-4 electromagnetic flag-indicator relays. 484
7-7. RNT and DZT differential current relays 486
7-8. KRS resistance relays 490
7-9. IVCh, RCh, and IRCh frequency relays 491
7-10. RPB reclosing relays. 492
7-11. Power-supply equipment for operational objectives 492
7-12. UZ-401 charging unit and BK-400 capacitor units. 495
7-13. Single-phase ground-fault warning devices. 496
B. Remote-control Devices
7-14. Remote-signalling (TS), remote-control (TU) and remote-measurement calling (VTI) devices. 497
7-15. Remote-measuring (TI) devices. 501
7-16. Combined remote-control devices 504
C. Measuring Devices
7-17. Symbols for measuring devices. 505
7-18. Classes of accuracy and error for measuring devices 508
7-19. Electric measuring devices for general-industrial use. 509

Section Eight
Apparatus and Devices for Mechanizing Repair Work and Operational Service

8-1. Repair and industrial bases (RPB's) of electric networks. 513
8-2. Repair and mechanical stations (RMS's). 514
8-3. Transport equipment 518
8-4. Operating mechanisms. 521
8-5. Rigging equipment. 526
8-6. Special devices and tools 532

Section Nine
Accident Prevention, Protective Equipment and Devices

9-1. Standards and testing schedules for protective equipment, insulating apparatus and devices. 535
9-2. Minimum operating distances permitted by safety regulations. . . . 539
9-3. Maximum allowable electrical field strengths, x-ray radiation, temperatures and noise 542
9-4. Maximum allowable concentrations of harmful gases, steam, dust and other aerosols in the air in the work area. 544
9-5. Insulated poles (operational and testing). 545
9-6. High and low-voltage indicators 546
9-7. Translational grounding (short circuits) 550
9-8. Warning colors and danger signals 551
9-9. Disconnection of the magnetizing currents of power transformers and the charging currents of overhead and cable lines through the use of isolator switches and disconnectors 553
9-10. Testing hoisting gear and lifting devices. 555
Alphabetical Index 564

APPROVED FOR RELEASE: 2007/02/08: CIA-RDP82-00850R000300090014-4

APPROVED FOR RELEASE: 2007/02/08: CIA-RDP82-00850R000300090014-4

Section Four

High-tension Overhead Electric Transmission Lines

4-1. Classification of Overhead Lines With Respect to the Rated Voltage

Rated voltage, kV	Transmitted power (on one circuit), thousands of kVA	Length of line, km	Area of application and primary purpose
To 1	To 0.1	To 3	Power supply to individual consumers in population centers; distribution of power inside enterprises
1-10	0.1-3	3-15	Power supply to industrial and rural consumers; distribution of power inside large-scale industrial enterprises
20-35	2-15	10-30	Distribution of power in cities and large population centers; power supply to rural consumers
110-150	15-100	30-100	Distribution of power in electric power systems and enterprises of electric-power networks; power supply to remote rural consumers; distribution of power in large cities
220-330	100-600	100-300	Distribution of power in large-scale electric-power systems; power supply to remote and large-scale consumers of electric power from electric-power systems and power stations
400-500	600-1000	200-500	To form consolidated electric-power systems; to provide for intersystem connections; to provide for the output of power from large-scale electric power stations as well as to provide electric power to large-scale power-intensive enterprises or districts
750	1000-2500	500-1000	To form large-scale consolidated electric-power systems; to provide for intersystem connections and to deliver the output of large-scale electric-power stations

APPROVED FOR RELEASE: 2007/02/08: CIA-RDP82-00850R000300090014-4

APPROVED FOR RELEASE: 2007/02/08: CIA-RDP82-00850R000300090014-4

Notes:

1. The power transmitted (on one circuit) and the length of the lines are shown for the most commonly used conductor cross-sections, based on design experience.

2. Two-circuit lines at lower rated voltages can be used to find the boundary values for transmitted power and line length.

4-2. Estimated Climatic Conditions

4-2-1. Normal Velocity Head (Velocity) of the Wind

Area of the USSR with respect to wind	Velocity head of the wind, kgs/m^2 (wind velocity, m/s), at heights of up to 15 m from the ground with a frequency of:		
	Once in 5 years	Once in 10 years	Once in 15 years
I	27 (21)	40 (25)	55 (30)
II	35 (24)	40 (25)	55 (30)
III	45 (27)	50 (29)	55 (30)
IV	55 (30)	65 (32)	80 (36)
V	70 (33)	80 (36)	80 (36)
VI	85 (37)	100 (40)	100 (40)
VII	100 (40)	125 (45)	125 (45)

Notes:

1. The determination of the estimated climatic conditions for the selection of the type of construction and design of overhead lines is carried out on maps of climatic regionalization, refined where necessary through the use of regional maps or on the basis of data from long-term observations and specialized research.

2. A frequency of one time per 5 years is used for overhead lines of 3 kV and less; one time per 10 years for lines of 6-330 kV; one time per 15 years for lines of 400, 500 and 750 kV.

3. For 6-330 kV overhead lines the normal velocity head (wind velocity) is assumed to be no less than 40 kgs/m^2 (25 m/s), while for 400, 500 and 750-kV lines it is no less than 55 kgs/m^2 (30 m/s).

4. For overhead-line sections in built-up areas with an average building height of not less than 2/3 of the height of the towers as well as for overhead lines crossing forest reservations, along mountain valleys, etc., it is permitted to reduce the normal velocity head by 30 percent (wind velocity by 16 percent).

APPROVED FOR RELEASE: 2007/02/08: CIA-RDP82-00850R000300090014-4

APPROVED FOR RELEASE: 2007/02/08: CIA-RDP82-00850R000300090014-4

5. For overhead-line sections located in high-wind areas (high shorelines along large rivers, elevations which stand out sharply against the surrounding areas, wide passes, shorelines of large lakes and reservoirs within limits of 3-5 km), the greatest normal velocity head must be increased by 40 percent (wind velocity by 18 percent) when data from observations in these areas are lacking.

6. In the absence of observation data for mountain regions and areas which stand out sharply against the surrounding terrain, the greatest normal velocity head (wind velocity) must be assumed to be equal to 75 kgs/m^2 (35 m/s) when crossing valleys and canyons open to strong winds.

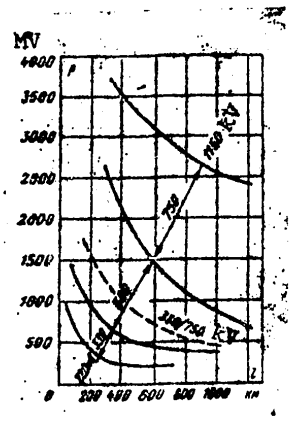

Fig. 4-1. Area of Application of Superhigh-voltage Overhead Lines

The dotted line indicates the border of application of 330 and 750-kV overhead lines (500-kV overhead lines not included)

APPROVED FOR RELEASE: 2007/02/08: CIA-RDP82-00850R000300090014-4

APPROVED FOR RELEASE: 2007/02/08: CIA-RDP82-00850R000300090014-4

4-2-2. Increase in the Velocity Head of the Wind With Respect to Height

Height, m	To 15	20	30	40	50	70	100	350 m and more
Factor	1.0	1.35	1.57	1.8	1.87	2.0	2.2	3.0

Notes:

1. In the height zone to 15 m, the normal velocity head of the wind is assumed to be equal to the velocity head at a height of 10 m.

2. The velocity head of the wind against conductors and cables is determined according to the height of the relative center of gravity (h_r) of the conductors and cables, determined according to the formula

$$h_r = h_m - \frac{2}{3} f,$$

where h_m is the mean height of conductor attachment or the height of cable attachment on the tower, m; f is the conductor or cable sag (generally assumed to be maximum), m.

4-2-3. Normal Thickness of Ice Glaze

Area of the USSR with respect to ice	Normal thickness of ice glaze at a height of 10 m above the ground (no less), mm, with a frequency of	
	Once in 5 years	Once in 10 years
I	5	5
II	5	10
III	10	15
IV	15	20
Special	20 and more	25 and more

Notes:

1. See 4-2-1, para. 1.

2. For 400, 500 and 750-kV overhead lines, the thickness of the ice glaze is based on the processing of data from actual observations in the area of overhead line routes (not less than 10 mm thick, however).

APPROVED FOR RELEASE: 2007/02/08: CIA-RDP82-00850R000300090014-4

APPROVED FOR RELEASE: 2007/02/08: CIA-RDP82-00850R000300090014-4

3. Data on the observed ice deposits are adjusted to an ice glaze of cylindrical form with a density of 0.9. The calculated thickness of the ice glaze in ice areas I-IV is rounded off to the nearest 5-mm increment. In the special area it is rounded off to the nearest mm.

4. When determining the estimated thickness of the ice glaze on conductors of various diameters, the values indicated in the table must be multiplied by the following factors:

Conductor diameter, mm	5	10	20	30	50
Factor	1.1	1.0	0.9	0.8	0.7

Linear interpolation is used to determine the factor values for intermediate diameters.

5. For the height of the relative center of gravity of the conductors or cables up to 25 m, a correction for the normal ice glaze thickness dependent upon the height and diameter of the conductors and cables is not introduced. At heights of 25 m and more, however, the normal thickness of the ice glaze is calculated in accordance with the Construction Standards and Specifications chapter entitled "Loads and Reactions."

6. For long cross-overs and sections of overhead lines passing by hydroelectric station dams, near cooling ponds, etc., the thickness of the ice glaze must be taken to be 5 mm greater than that for the entire line when observation data are lacking.

4-2-4. Combinations of Climatic Conditions Used in Designing Overhead Lines

Design condition	Combination of climatic conditions
Normal (conductors and cables not broken)	1. High temperatures for air, wind and ice lacking 2. Conductors and cables are covered by ice glaze, temperature minus 5°C, wind lacking 3. Low temperature, wind and ice lacking 4. Mean annual temperature, wind and ice lacking 5. Maximum velocity head of the wind, temperature minus 5°C, ice lacking 6. Conductors and cables covered by ice, temperature minus 5°C, velocity head of the wind is 0.25 Q_{max} (0.5 v_{max})*. When the thickness of the ice is 15 mm and more, the value for the velocity head of the wind during icing cannot be less than 1.4 kgc/m^2 (wind velocity not less than 15 m/s)

APPROVED FOR RELEASE: 2007/02/08: CIA-RDP82-00850R000300090014-4

APPROVED FOR RELEASE: 2007/02/08: CIA-RDP82-00850R000300090014-4

Design condition	Combination of climatic conditions
Emergency (break in conductors or cables)	1. Conductors and cables covered with ice, temperature minus 5°C, wind lacking 2. Low temperature, wind and ice glaze lacking 3. Mean annual temperature, wind and ice glaze lacking
Check of installation conditions	Temperature minus 15°C, velocity head of the wind at a height of up to 15 m above the ground is 6.25 kgs/m^2 (wind velocity 10 m/s), ice glaze lacking
Estimate of the approach of conductors to tower elements and other structures	1. At the rated voltage: maximum velocity head of the wind, temperature minus 5°C, ice glaze lacking 2. During atmospheric and internal overloads: velocity head of the wind 0.1 Q_{max} (v = 0.3 v_{max})*, but not less than 6.25 kgs/m^2; temperature +15°C, ice glaze lacking 3. To insure safe ascent on towers when carrying current: temperature minus 15°C, wind and ice glaze lacking

*Q_{max} (v_{max})--maximum velocity head (velocity) of the wind

Notes:

1. In some areas of the USSR where increased wind velocities during icing or a combination of high wind velocities and heavy icing with a density of not less than 0.9 g/cm^3 have been noted or can be expected, the values for the thickness of the ice glaze and the wind velocity must be assumed in accordance with the observation data.

2. For areas with a mean annual temperature of minus 5°C or lower, the temperature at maximum wind velocity and icing must be assumed to be minus 10°C in the normal operating condition.

APPROVED FOR RELEASE: 2007/02/08: CIA-RDP82-00850R000300090014-4

APPROVED FOR RELEASE: 2007/02/08: CIA-RDP82-00850R000300090014-4

4-3. Basic Specifications for Line Right of Way and for Crossing Various Facilities

4-3-1. Basic Specifications

Nature of the terrain and facilities to be connected	Maximum allowable distance from the conductors, meters, at line voltages, V														Specific requirements and allowable variations
	At maximum conductor sag							At maximum conductor deflection							
	To 20	35-110	150	220	330	400-500	750	To 20	35-110	150	220	330	400-500	750	
1. Unpopulated areas															
a) Distance to the ground in unpopulated areas accessible to transport and agricultural vehicles	6	6	6.5	7	7.5	8	9	-	-	-	-	-	-	-	For 750-kV lines, the distance from the conductors in the tower circuit to the ground must not be less than 10 m
b) Distance to the ground on rough terrain--not accessible to transport and agricultural vehicles	5	5	5.5	6	6.5	7	8	-	-	-	-	-	-	-	
c) Distance to inaccessible mountain slopes and cliffs	3	3	3.5	4	4.5	5	6.5	2.5	3	3.5	4	4.5	5	6.5	
d) Width of clearing in forest tracts and in vegetation when the tree height is up to 4 m is no less than	Distance between the outer conductors plus 3 m in any direction														Where approved, it is permissible to reduce the width of the clearing, but no less than that required in accordance with para. 2b. When lines cross orchards where the stands are less than 4 m in height, a cleared area is not mandatory.

APPROVED FOR RELEASE: 2007/02/08: CIA-RDP82-00850R000300090014-4

APPROVED FOR RELEASE: 2007/02/08: CIA-RDP82-00850R000300090014-4

4-3-1. Continuation

Nature of the terrain and facilities to be connected	Maximum allowable distance from the conductors, meters, at line voltages, V														Specific requirements and allowable variations
	At maximum conductor sag							At maximum conductor deflection							
	To 20	35-110	150	220	330	400-500	750	To 20	35-110	150	220	330	400-500	750	
e) Width of the clearing when the height of the trees is more than 4 m is not less than	Distance between the outer conductors plus the height of the major forest tract in each direction. Individual trees on the edge of the clearing whose height is greater than the height of the major forest tract are cut down.														For 220-kV lines and lower, the disconnection of which will not cause a disruption of power, it is permissible to reduce the width of the clearing in accordance with para. 2b
f) The distance from the outer conductors (when in service) to individually standing buildings and structures (safety zone) is not less than	For 20-kV lines--10 m; for 35-kV lines--15 m; for 110-kV lines--20 m; for 150 to 220-kV lines--25 m; for 330 to 500-kV lines--30 m; for 750-kV lines--50 m														Where approved, it is permissible to reduce the indicated distances, but they can not be less than those required in accordance with para. 2b
2. Populated areas and territories of industrial enterprises															
a) Distance to the surface of the earth	7	7	7.5	8	8	8	9	-	-	-	-	-	-	-	With a break in an adjacent span, it is permissible to reduce the distances indicated in para. 2a for lines of: 2-100 kV--to 4.5 m 150 kV--to 5 m 220 kV--to 5.5 m 330 kV--to 6.0 m

APPROVED FOR RELEASE: 2007/02/08: CIA-RDP82-00850R000300090014-4

APPROVED FOR RELEASE: 2007/02/08: CIA-RDP82-00850R000300090014-4

4-3-1. Continuation

Nature of the terrain and facilities to be connected	Maximum allowable distance from the conductors, meters, at line voltages, V														Specific requirements and allowable variations
	At maximum conductor sag							At maximum conductor deflection							
	To 20	35-110	150	220	330	400-500	750	To 20	35-110	150	220	330	400-500	750	
b) Distance to treetops (city squares, parks and reservations, protective forest plantations, valuable forest tracts, etc.)	-	-	-	-	-	-	-	2	3	4	4	5	5	8	
c) Closest distance to parts of buildings and structures	3	3-4	4	5	6	-	-	2	4	5	6	8	10	15	The passage of lines over buildings and structures, with the exception of fireproof industrial buildings and structures, is not permitted. The metal roofs of such buildings must be grounded.
3. Railroads															
a) Distance from the conductors to the rail tops for standard and narrow-gage general-purpose railroads	7.5	7.5	8	8.5	9.0	9.5	10.5	-	-	-	-	-	-	-	1. The angle of intersection with electrified railroads and railroads subject to electrification cannot be less than 40°. In all cases it is recommended that the intersection be made as close as possible to 90°. An angle of intersection less than 90° for 750-kV lines must be approved.

APPROVED FOR RELEASE: 2007/02/08: CIA-RDP82-00850R000300090014-4

APPROVED FOR RELEASE: 2007/02/08: CIA-RDP82-00850R000300090014-4

4-3-1. Continuation

Nature of the terrain and facilities to be connected	Maximum allowable distance from the conductors, meters, at line voltages, V														Specific requirements and allowable variations
	At maximum conductor sag							At maximum conductor deflection							
	To 20	35-110	150	220	330	400-500	750	To 20	35-110	150	220	330	400-500	750	
b) Distance to the rail tops for narrow-gage special-purpose railroads	6	6.5	7	7.5	8	8.5	9.5	-	-	-	-	-	-	-	2. When intersecting general-purpose and electric railroads, the towers of the intersecting span must be of the anchor-type. It is permissible to erect an intermediate tower between rails not intended for the passage of regular passenger trains. Intermediate towers may also be erected along the edges of the road bed. These towers must be of metal or concrete. When intersecting special-purpose railroads, it is permissible to fix the tower conductors with dead ends. 3. Checking of the vertical clearances along spans greater than 200 m in length must be carried out with consideration being given to the heating of the conductors due to the current; in the absence of data, t = +70°C.
c) Distance from the conductors to the suspension cables and trolley wires in the trolley circuit of electric railroads	Same as for power lines intersecting one another, para. 4-3-2							Same as for convergence of power lines, para. 10						15	
d) Clearance between conductors and buildings	-	-	-	-	-	-	-	1.5	2.5	2.5	2.5	3.5	4.5	6.5	
e) Clearance between line towers and buildings and to the axis of the towers in the trolley-wire circuit	Not less than the height of the tower plus 3 m. On sections of crowded routes, the following may be used: for lines to 20 kV--3 m; from 35 to 150 kV--6 m; for 2220 to 330 kV--8 m; for 400 to 500 kV--10 m; for 750 kV--15 m														

APPROVED FOR RELEASE: 2007/02/08: CIA-RDP82-00850R000300090014-4

APPROVED FOR RELEASE: 2007/02/08: CIA-RDP82-00850R000300090014-4

4-3-1. Continuation

Nature of the terrain and facilities to be connected	Maximum allowable distance from the conductors, meters, at line voltages, V														Specific requirements and allowable variations
	At maximum conductor sag							At maximum conductor deflection							
	To 20	35-110	150	220	330	400-500	750	To 20	35-110	150	220	330	400-500	750	
4. Highways															
a) Distance from the conductors to the roadbed	7	7	7.5	8	8.5	9	10	-	-	-	-	-	-	-	1. When intersecting a category I highway, the towers of the intersecting span must be of the anchor-type.
b) Distance when a conductor breaks in the adjacent span	5	5	5.5	5.5	6	-	-	-	-	-	-	-	-	-	2. When intersecting a category V highway, the requirements are the same as when crossing an unpopulated area.
c) Distance from the base of the tower to the highway shoulder at the point of intersection	Not less than the height of the tower														
d) Distance to the shoulder at approaches	Not less than the height of the tower plus 5 m, and not less than 25 m														
e) Horizontal distance from any part of the tower to the foot of the road embankment or to the outer edge of the side drain, on sections of a crowded route	When intersecting category I and II roads: for lines to 220 kV--5 m; for lines 330 to 500 kV--10 m; for lines to 750 kV--15 m When intersecting category III and IV roads: for lines to 20 kV--1.5 m; for lines 35 to 220 kV--2.5 m; for lines 330 to 500 kV--5.0 m; for lines to 750 kV--10 m														

APPROVED FOR RELEASE: 2007/02/08: CIA-RDP82-00850R000300090014-4

APPROVED FOR RELEASE: 2007/02/08: CIA-RDP82-00850R000300090014-4

4-3-1. Continuation

Nature of the terrain and facilities to be connected	Maximum allowable distance from the conductors, meters, at line voltages, V														Specific requirements and allowable variations
	At maximum conductor sag							At maximum conductor deflection							
	To 20	35-110	150	220	330	400-500	750	To 20	35-110	150	220	330	400-500	750	
f) Horizontal distance from the line conductors to the foot of the road embankment or the outer edge of the side drain when the conductors are deflected toward the edge of the shoulder	–	–	–	–	–	–	–	2	4	5	6	8	10	15	
5. Street-car and trolley-bus lines															
a) Distance from the conductors to the rail tops of street-car lines	9.5	9.5	10.5	10.5	11.5	11.5	13	–	–	–	–	–	–		When crossing street-car and trolley-bus lines, the towers of the intersecting span must be of the anchor-type. For 35-kV and higher lines with conductors of 120 mm^2 cross-section and greater, the use of intermediate towers with dead ends is permitted.
b) Distance from the conductors to the rail tops of trolley-bus lines	11	11	12	12	13	13	15	–	–	–	–	–	–		
c) Distance from the power-line conductors to the conductors or suspension cables of the traction-power circuit	3	3	4	4	5	5	6.5	3	3	4	4	5	5	6.5	

APPROVED FOR RELEASE: 2007/02/08: CIA-RDP82-00850R000300090014-4

APPROVED FOR RELEASE: 2007/02/08: CIA-RDP82-00850R000300090014-4

4-3-1. Continuation

Nature of the terrain and facilities to be connected	Maximum allowable distance from the conductors, meters, at line voltages, V														Specific requirements and allowable variations
	At maximum conductor sag							At maximum conductor deflection							
	To 20	35-110	150	220	330	400-500	750	To 20	35-110	150	220	330	400-500	750	
d) Distance to conductors or suspension cables of the traction-power circuit when a conductor in an adjacent span breaks	1	1	2	2	2.5	-	-	-	-	-	-	-	-	-	
e) Distance from power-line conductors to towers of the traction-power circuit	7	7	8	8	9	9	10.5	3	3	4	4	5	5	15	
6. Navigable rivers and canals															
a) Distance to the highest masts of vessels at the highest water level or timber-raft clearance at the highest water level and highest temperature	2	2	2.5	3	3.5	4	5.5	-	-	-	-	-	-	-	The towers of the crossing span must be of the anchor-type. For 35-kV lines and greater of 120 mm^2 cross-section and more, it is permissible to use intermediate-type towers with dead ends and roller-type cable hangers; in the latter case, the adjacent and intermediate towers must be of the anchor-type.
b) Distance to the highest water levels at highest temperatures and to the level of the ice at -5°C when ice is present on the conductors	6	6	6.5	7	7.5	8	9	-	-	-	-	-	-	-	

APPROVED FOR RELEASE: 2007/02/08: CIA-RDP82-00850R000300090014-4

APPROVED FOR RELEASE: 2007/02/08: CIA-RDP82-00850R000300090014-4

4-3-1. Continuation

Nature of the terrain and facilities to be connected	Maximum allowable distance from the conductors, meters, at line voltages, V														Specific requirements and allowable variations
	At maximum conductor sag							At maximum conductor deflection							
	To 20	35-110	150	220	330	400-500	750	To 20	35-110	150	220	330	400-500	750	
7. Non-navigable rivers and canals															
a) Distance to the level of winter ice	6	6	6.5	7	7.5	8	9	-	-	-	-	-	-	-	
b) Distance to the highest water level (at an air temperature of +15°C)	3	3	3.5	4	4.5	5	6.5	-	-	-	-	-	-	-	
8. Dams and dikes															
a) To crests and bank lips on dams and dikes	6	6	6.5	7	7.5	8	9	-	-	-	-	-	-	-	
b) To the inclined surface on banks of dams and dikes	5	5	5.5	6	6.5	7	8	5	5	5.5	6	6.5	7	8	
c) To the surface of the dam's overflow water	4	4	4.5	5	5.5	6	7	4	4	4.5	5	5.5	6	7	
9. Cableways and metal surface pipes															
a) Distance from the conductors to any part of the cableway or pipe (including bridges, barriers, etc.)	3	3	4.5	5	6	6.5	8	3	4	4.5	5	6	6.5	8	Electric transmission lines must pass over cableways and pipes. In exceptional cases it is permissible to pass power lines of up to 220 kV over a cableway. In this case,

APPROVED FOR RELEASE: 2007/02/08: CIA-RDP82-00850R000300090014-4

APPROVED FOR RELEASE: 2007/02/08: CIA-RDP82-00850R000300090014-4

4-3-1. Continuation

Nature of the terrain and facilities to be connected	Maximum allowable distance from the conductors, meters, at line voltages, V														Specific requirements and allowable variations
	At maximum conductor sag							At maximum conductor deflection							
	To 20	35-110	150	220	330	400-500	750	To 20	35-110	150	220	330	400-500	750	
b) Distance from the conductors to any part of the cableway or pipe when a conductor in the adjacent span breaks	1	2	2.5	3	4	-	-	-	-	-	-	-	-	-	the cableway must have a shield or bridge above to protect the line conductor. For power lines of 120 mm^2 cross-section and greater or for TK-type steel cables of 50 mm^2 cross-section and greater, it is permissible to make the intersection using intermediate-type towers with dead ends.
c) Horizontal distance from the power-line tower to any part of the cableway or pipe	Not less than the height of the tower														
d) Horizontal distance to a gas main	Not less than 180 m														
e) Horizontal distance to an oil line	Not less than 100 m														
f) Horizontal distance to a pulp line	Not less than 50 m														
10. Electric transmission lines															
a) The distance between conductors or between conductors and cables of intersecting lines and between conductors on approach sections	See para. 4-3-2							Upon approaching and running parallel to lines of up to 330 kV, the distance between their axes must not be less than the height of the highest tower; upon approach to lines of 400-500 kV--not less							1. Conductors of high-tension lines are positioned over low-tension lines. Exceptions are permitted only for 35-kV lines and higher with conductors of not less than 120 mm^2 in

APPROVED FOR RELEASE: 2007/02/08: CIA-RDP82-00850R000300090014-4

APPROVED FOR RELEASE: 2007/02/08: CIA-RDP82-00850R000300090014-4

4-3-1. Continuation

Nature of the terrain and facilities to be connected	Maximum allowable distance from the conductors, meters, at line voltages, V														Specific requirements and allowable variations
	At maximum conductor sag							At maximum conductor deflection							
	To 20	35-110	150	220	330	400-500	750	To 20	35-110	150	220	330	400-500	750	
								than 50 m; upon approach to lines of 750 kV--not less than 100 m. On crowded sections of line, the distance between the conductors of various lines is assumed to be dependent upon the line voltage and must not be less than:							cross-section when they intersect lines of up to 220 kV, inclusive. 2. The place of intersection must be as close as possible to the tower of the intersecting (upper) line. Based upon the wind deflection of the conductors, however, the location of the intersection cannnot be less than 6 m for lines up to 330 kV; 10 m for lines of 400-750 kV. 3. For the requirements for lightning-resistance of the intersection, see para. 6-14-2.
								2.5	4-5	6	7	10	15	20	
11. Overhead communications and signal lines															
a) Distance between conductors of intersecting lines for power lines on metal and reinforced concrete tower and for	3*	3	4	4	5	5	6.5	When approaching and running parallel to transmission lines, the distance between the lines is determined by calculating the effect on the communi-							1. Power-line conductors must be situated over communications lines. 2. The place of intersection must be situated as close as possible to
	* Up to 10 kV--2 m														

APPROVED FOR RELEASE: 2007/02/08: CIA-RDP82-00850R000300090014-4

APPROVED FOR RELEASE: 2007/02/08: CIA-RDP82-00850R000300090014-4

4-3-1. Continuation

Nature of the terrain and facilities to be connected	Maximum allowable distance from the conductors, meters, at line voltages, V														Specific requirements and allowable variations
	At maximum conductor sag							At maximum conductor deflection							
	To 20	35-110	150	220	330	400-500	750	To 20	35-110	150	220	330	400-500	750	
lines on wooden towers when lightning-protection devices are present (ground cables, lightning-arrestors)								cations and signal lines, but must not be less than the height of the tallest tower on the line. On crowded line sections, the distance between the conductors is based on their deflection and must not be less than:							the transmission-line tower, but not closer than 7 m from it. 3. The line towers on the intersecting span can be of the intermediate type with dead ends. 4. Communication-line towers on the intersecting span must have protective shunt dischargers with a grounding resistance of not more than 25 Ω.
b) Distance for lines on wooden towers in the absence of lightning-protection devices on the intersecting span	4	5	6	6	7	7	-	2	4	5	6	8	10	15	
c) Distance when a conductor breaks in the adjacent span	1	1	1.5	2	2.5	3.5	5								

Notes:

1. The greatest distances from the conductors to the surface of the ground, the water and the facilities which have been crossed are determined for conditions of maximum sag: at the maximum calculated air temperature or with the designed ice load at the corresponding temperature (-5°C).

2. The greatest distances from the conductors to the facilities located alongside are determined for conditions of maximum wind deflection of the conductors: at the maximum calculated wind velocity or in the presence of ice and the corresponding wind velocity and temperature.

APPROVED FOR RELEASE: 2007/02/08: CIA-RDP82-00850R000300090014-4

APPROVED FOR RELEASE: 2007/02/08: CIA-RDP82-00850R000300090014-4

4-3-1. Continuation (Notes)

3. When electric transmission lines cross various objectives, the angle of intersection (excluding the intersection of trunk lines and electric railroads) is not standardized; the angle of intersection, however, must be as large as possible.

4. The towers of the intersecting electric transmission line which span the intersection (excluding those cases already discussed) can be of the intermediate type; single suspension insulators are used, attached at dead ends. The cables are fixed at two points when pin-type insulators are used.

APPROVED FOR RELEASE: 2007/02/08: CIA-RDP82-00850R000300090014-4

APPROVED FOR RELEASE: 2007/02/08: CIA-RDP82-00850R000300090014-4

4-3-2. Overhead Electric Transmission Lines Which Intersect One Another

Intersecting line voltage (upper), kV	Intersecting line voltage (lower), kV	Length of span of intersecting line	Maximum allowable distance between conductors or between conductors and cables of intersecting lines, m — At maximum distance between point of intersection and nearest tower, m						Maximum allowable distance between conductors of intersecting lines, not requiring lightning protection on the intersecting span, m
			30	50	70	100	120	150	
750	750 and less	To 200	6.5	6.5	6.5	7.0	-	-	9
		300	6.5	6.5	7.0	7.5	8.0	8.5	
		450	6.5	7.0	7.5	8.0	8.5	9.0	
330-500	500 and less	To 200	5	5	5	5.5	-	-	7
		300	5	5	5.5	6	6.5	7	
		450	5	5.5	6	7	7.5	8	
150-220	220 and less	To 200	4	4	4	4	-	-	6
		300	4	4	4	4.5	5	5.5	
		450	4	4	5	6	6.5	7	
20-110	110 and less	To 200	3	3	3	4	-	-	For 35 to 110-kV lines--5
		300	3	3	4	4.5	5	5	
1-10	10 and less	To 100	2	2	-	-	-	-	For 20-kV overhead lines and less--4
		150	2	2.5	2.5	-	-	-	

Notes:

On overhead lines without lightning-protection cables and with wooden supports on the towers spanning the intersection, arresters must be installed. On 6 to 35-kV lines equipped with automatic reclosure switches and on lines of less than 6 kV, protective-gap devices may be installed in place of arresters.

If the distance from the point of intersection to the nearest tower is not less than 40 m, the arresters and protective gaps are installed only on the nearest tower.

APPROVED FOR RELEASE: 2007/02/08: CIA-RDP82-00850R000300090014-4

APPROVED FOR RELEASE: 2007/02/08: CIA-RDP82-00850R000300090014-4

4-4. Towers and Foundations

4-4-1. Design Diagrams of Loads on the Towers

Tower Type	Overhead line operating conditions		
	Normal	Emergency	Installation
	Load diagrams		
Intermediate	Fig. 4-2, *a*, where G_n is the mass of the conductors and the suspension insulators (with or without ice glaze); G_T is the mass of the cables (with or without ice glaze); Q_n is the wind pressure on the conductors; Q_T is the wind pressure on the cables; Q_{on} is the wind pressure on the tower	Fig. 4-2, *b*, where G^1_n is the mass of broken conductors and suspension insulators; G_T is the mass of broken cables; T_n is the nominal stress in the broken conductors; T_T is the nominal stress in the broken cables	Fig. 4-2, *c*, where G_{rm} is the stress on the cross-piece during installation (hoisting) of the conductors with consideration given to the mass of the installation equipment; G_{TM} is the stress on the cable supports during installation (hoisting) of the cable
	Estimated conditions		
	1. Maximum wind velocity, no ice glaze, temperature minus 5°C. 2. Conductors and cables covered with ice, wind velocity at icing; temperature minus 5°C. 3. Lowest air temperature; no ice glaze nor wind (only for angle-suspension towers on spans less than the first critical).	1. Broken conductors in one phase with any number of circuits on the tower, creating the maximum bending moment; cables unbroken; no icing nor wind; mean annual temperature. 2. Same broken conductors as above, but creating the maximum turning moment. 3. One cable broken; conductor not broken; no ice nor wind; mean annual temperature.	1. Cross-pieces and cable supports are checked under loads corresponding to the method of installation, with consideration given to the forces in the pull cables, the mass of the conductors (cables) as well as the weight of the installation equipment. In this case, the temperature is minus 15°C, the velocity head is 6.25 kgs/m^2, no icing.

APPROVED FOR RELEASE: 2007/02/08: CIA-RDP82-00850R000300090014-4

APPROVED FOR RELEASE: 2007/02/08: CIA-RDP82-00850R000300090014-4

4-4-1. Continuation

Tower Type	Overhead line operating conditions		
	Normal	Emergency	Installation
	Load diagrams		
Anchor	Fig. 4-3, *a*, where G_n, G_T, G_n, Q_T and Q_{nm} are the same as the designations for intermediate towers. ΔT_n (ΔT_T) is the difference in stresses on conductors (cables) in adjacent spans.	Fig. 4-3, *b*, where G_n is the mass of the conductors and suspension insulators during icing. $G^1{}_T$ ($G^1{}_n$) is the mass of the conductors (cables) with ice remaining on the tower; T_n (T_T) is the stress on the remaining conductors (cables) on the tower with icing, without wind.	Fig. 4-3, *c*
	Estimated conditions		
	1. Maximum wind velocity, no icing, temperature minus 5°C 2. Conductors and cables covered with ice, velocity of the wind at icing, temperatures minus 5°C 3. Lowest air temperature; no wind nor icing 4. All conductors and cables mounted in one span, in another span the conductors and cables not mounted	1. The conductors in one or two[1] phases of any circuit on the tower are broken, creating the maximum bending moment on the tower; cables not broken; conductors and cables covered with ice glaze, no wind, temperature minus 5°C 2. The same, but creating the maximum turning moment on the tower	1. With any number of conductors on the tower, only one circuit installed on one of the spans 2. Cables installed in one span, conductors not installed 3. Cross-pieces and cable supports are checked in the same manner as indicated for intermediate towers

[1] Light-weight anchor towers as well as normal anchor towers (when hoisting aluminum-steel conductors of 185-mm^2 and greater cross-section and steel conductors (type TK cables)) are designed for a break in the conductors in one phase.

APPROVED FOR RELEASE: 2007/02/08: CIA-RDP82-00850R000300090014-4

APPROVED FOR RELEASE: 2007/02/08: CIA-RDP82-00850R000300090014-4

4-4-1. Continuation

Tower Type	Overhead line operating conditions		
	Normal	Emergency	Installation
	In this case, the normal stress in the conductors and cables is assumed to be 2/3 maximum	3. One cable of one span broken; conductors and cables covered with ice, no wind, temperature minus 5°C 4. A check is made according to paras. 1 and 2 at the lowest air temperature for spans less than first critical	4. For all estimations (paras. 1 and 2, 3 and 4) the temperatures of the air is assumed to be minus 15°C, velocity head is 6.25 kgs/m^2, no icing
	Load diagrams		
Dead-end	Fig. 4-3, d, where T_n (T_T) for conductors and cables are in the direction of the line	Same as for anchor towers	Same as for anchor towers
	Estimated conditions		
	1. Unilateral stress on all conductors and cables; maximum wind velocity; no ice glaze, minus 5°C 2. The same, but with conductors and cables covered with ice and with wind during icing; temperature minus 5°C 3. The same, but at lowest air temperature; no wind nor ice	Same as for anchor towers	Same as for anchor towers

Notes:

1. For operation under emergency conditions, intermediate towers with conductors attached to pin-type insulators using wire bindings must be designed for maximum stress when a conductor is broken, but not more than 150 kgs. In intersecting spans, dead-ends must be used for fixing conductors

APPROVED FOR RELEASE: 2007/02/08: CIA-RDP82-00850R000300090014-4

APPROVED FOR RELEASE: 2007/02/08: CIA-RDP82-00850R000300090014-4

instead of wire bindings. In this case, the towers must be checked for loads under emergency conditions.

2. The normal stress for overhead lines under emergency conditions with unbroken conductors is assumed to be:

a) for rigid towers (metal free-standing, all towers on guys, etc.):

- with conductors up to 185 mm^2 in cross-section--0.5 T_{max};

- with conductors up to 240 mm^2 and more--0.4 T_{max};

b) for rigid reinforced-concrete free-standing towers:

- with conductors up to 185 mm^2 in cross-section--0.3 T_{max};

- with conductors up to 240 mm^2 and more--0.25 T_{max};

c) for free-standing wooden towers:

- with conductors up to 185 mm^2 in cross-section--0.25 T_{max};

- with conductors from 240 to 400 mm^2 in cross-section--0.2 T_{max};

- with conductors up to 500 mm^2 in cross-section--0.15 T_{max},

when T_{max} is the maximum normal stress on the conductors.

3. The normal stress under emergency conditions for overhead lines with broken conductors is assumed to be the same as for overhead lines with unbroken conductors, with the introduction of a factor of 0.8 when two conductors are broken, 0.7 for three and 0.6 for four.

4. The normal stress under emergency conditions when the cable breaks is assumed to be equal to 0.5 T_{max}.

5. The load diagram for two-circuit towers have been cited as an example. Similar diagrams are composed for any type of tower design.

APPROVED FOR RELEASE: 2007/02/08: CIA-RDP82-00850R000300090014-4

APPROVED FOR RELEASE: 2007/02/08: CIA-RDP82-00850R000300090014-4

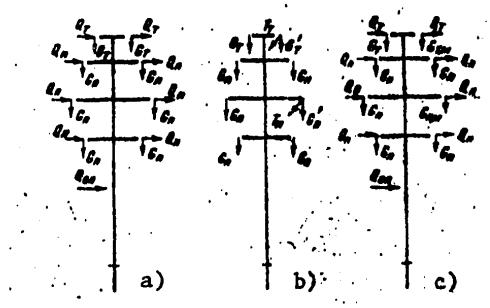

Fig. 4-2. Load Diagrams for Intermediate Towers Under Various Conditions

a - normal conditions
b - emergency conditions
c - installation conditions

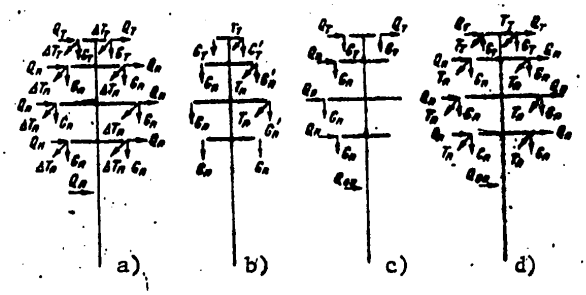

Fig. 4-3. Load Diagrams for Anchor-type Towers Under Various Conditions

a - normal conditions
b - emergency conditions
c - installation conditions
d - normal conditions for dead-end towers

APPROVED FOR RELEASE: 2007/02/08: CIA-RDP82-00850R000300090014-4

APPROVED FOR RELEASE: 2007/02/08: CIA-RDP82-00850R000300090014-4

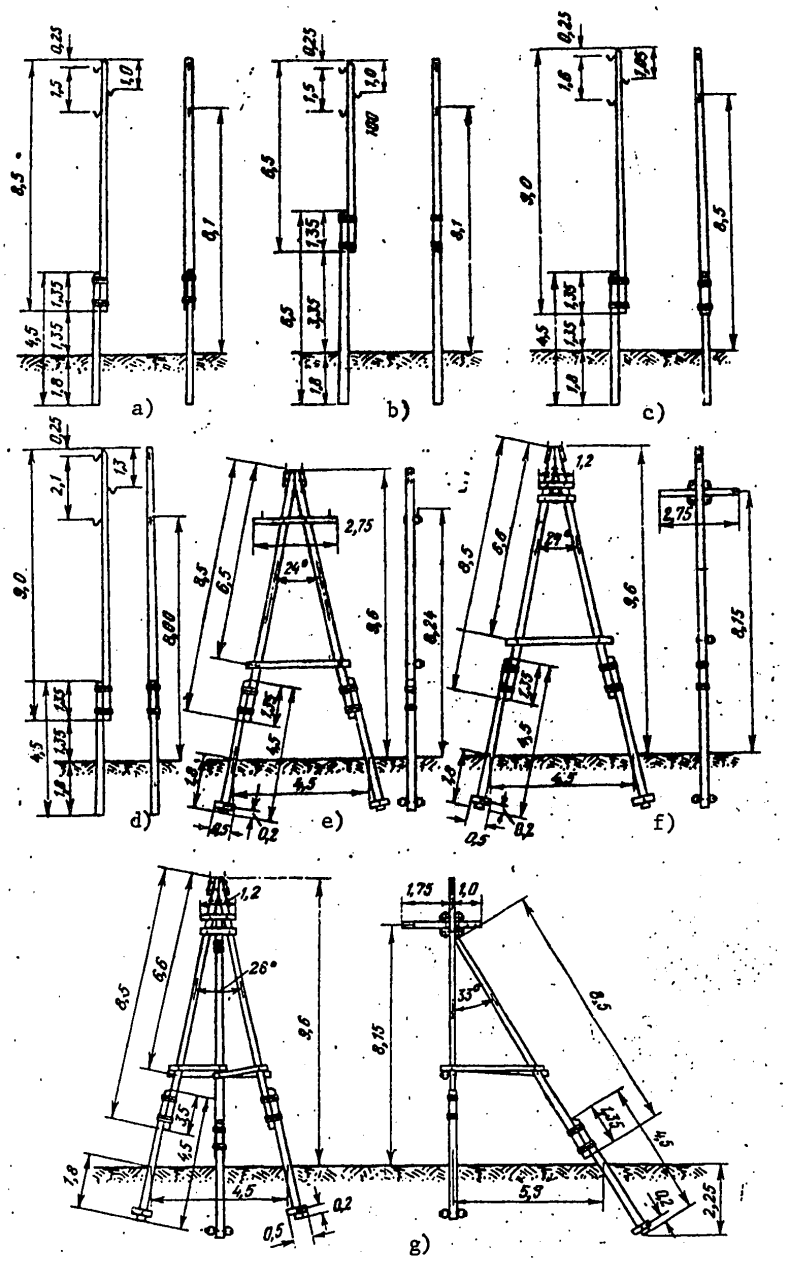

Fig. 4-4. Standardized 6 to 10-kV Wooden Towers

APPROVED FOR RELEASE: 2007/02/08: CIA-RDP82-00850R000300090014-4

APPROVED FOR RELEASE: 2007/02/08: CIA-RDP82-00850R000300090014-4

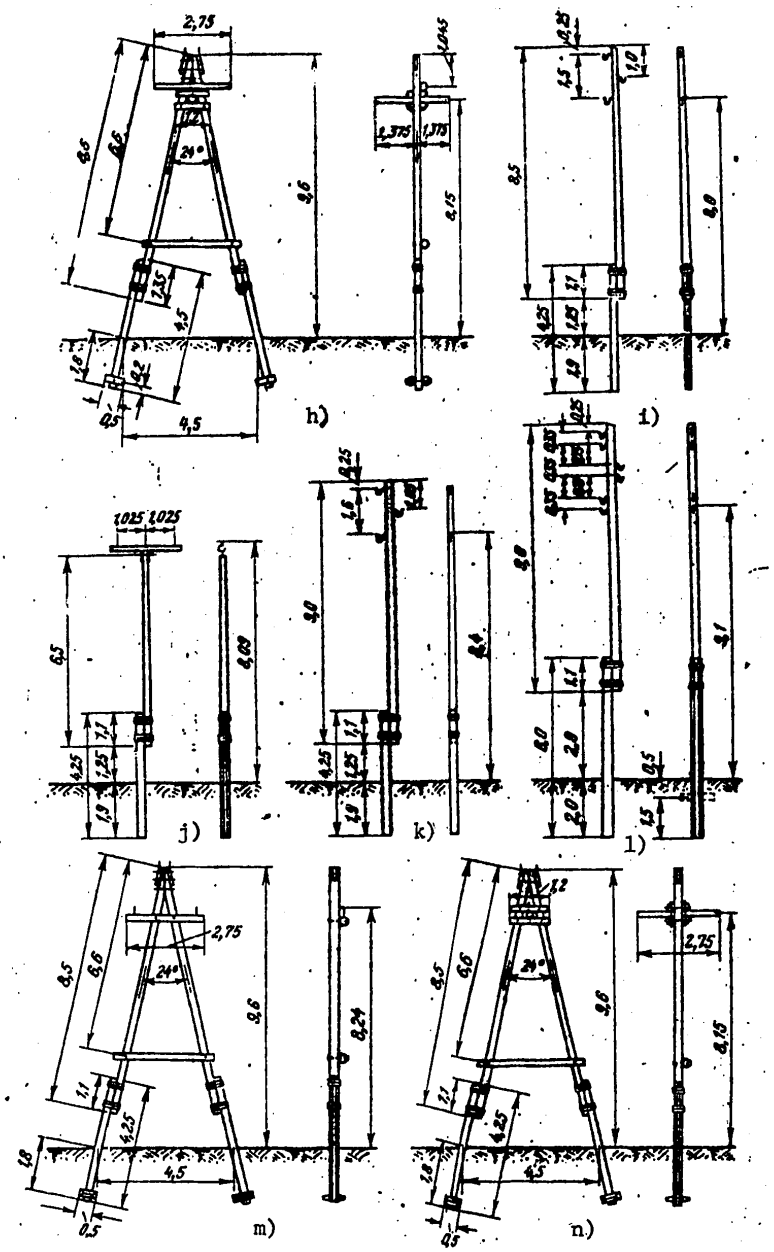

Fig. 4-4. Standardized 6 to 10-kV wooden Towers

APPROVED FOR RELEASE: 2007/02/08: CIA-RDP82-00850R000300090014-4

APPROVED FOR RELEASE: 2007/02/08: CIA-RDP82-00850R000300090014-4

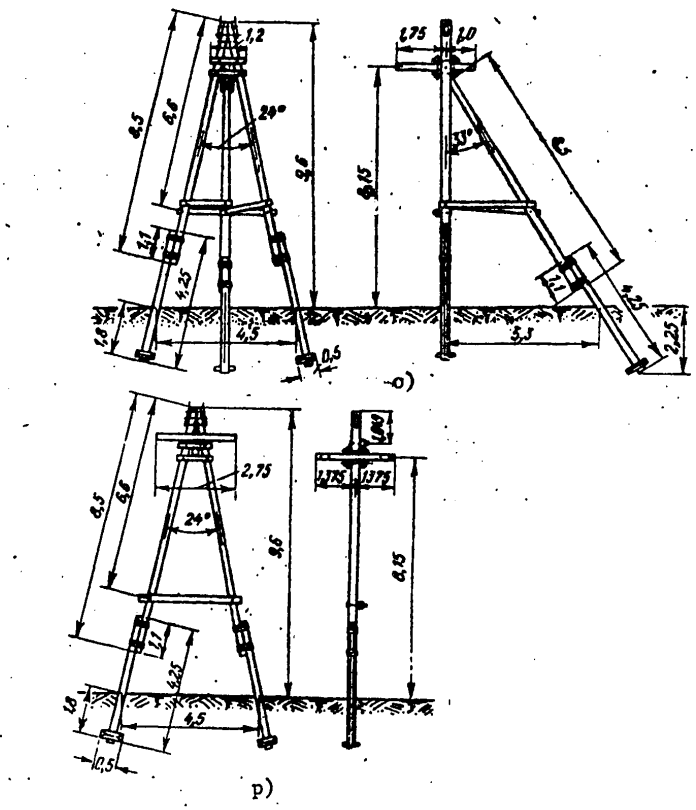

Fig. 4-4. Standardized 6 to 10-kV Wooden Towers

APPROVED FOR RELEASE: 2007/02/08: CIA-RDP82-00850R000300090014-4

APPROVED FOR RELEASE: 2007/02/08: CIA-RDP82-00850R000300090014-4

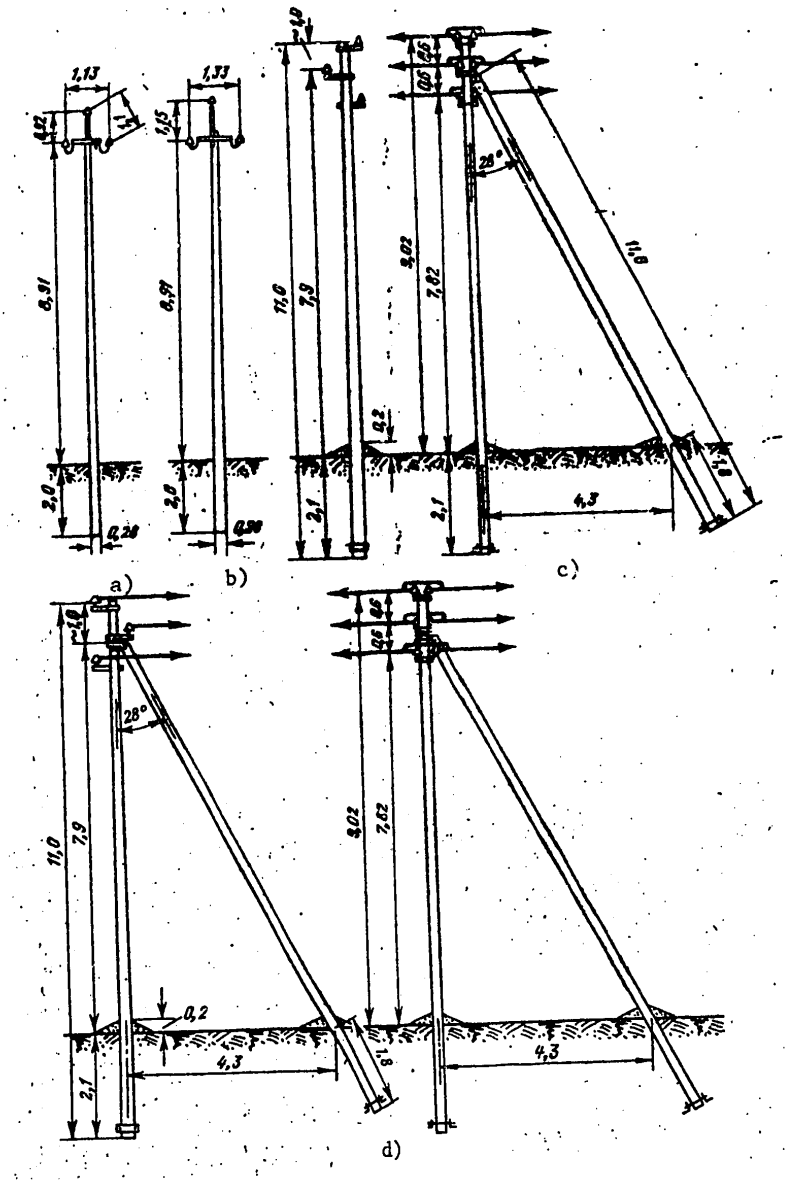

Fig. 4-5. Standardized 6 to 10-kV Reinforced-concrete Towers

APPROVED FOR RELEASE: 2007/02/08: CIA-RDP82-00850R000300090014-4

APPROVED FOR RELEASE: 2007/02/08: CIA-RDP82-00850R000300090014-4

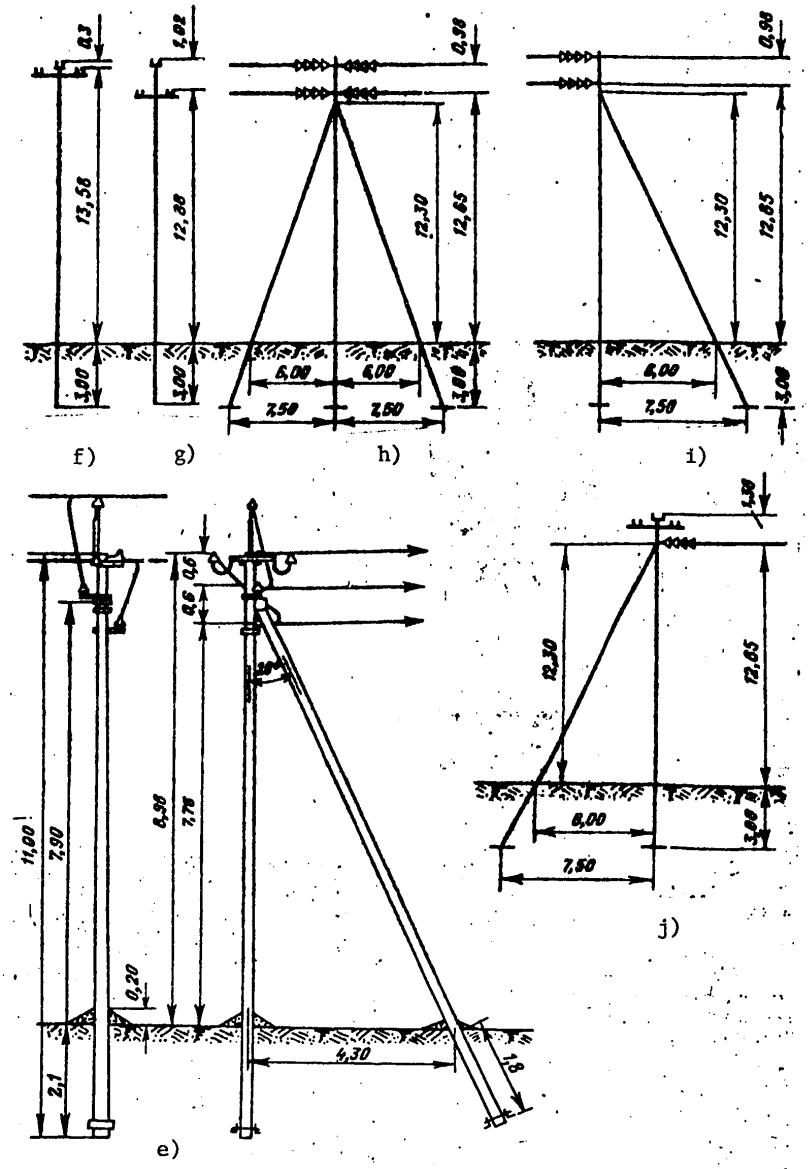

Fig. 4-5. Standardized 6 to 10-kV Reinforced-concrete Towers

APPROVED FOR RELEASE: 2007/02/08: CIA-RDP82-00850R000300090014-4

APPROVED FOR RELEASE: 2007/02/08: CIA-RDP82-00850R000300090014-4

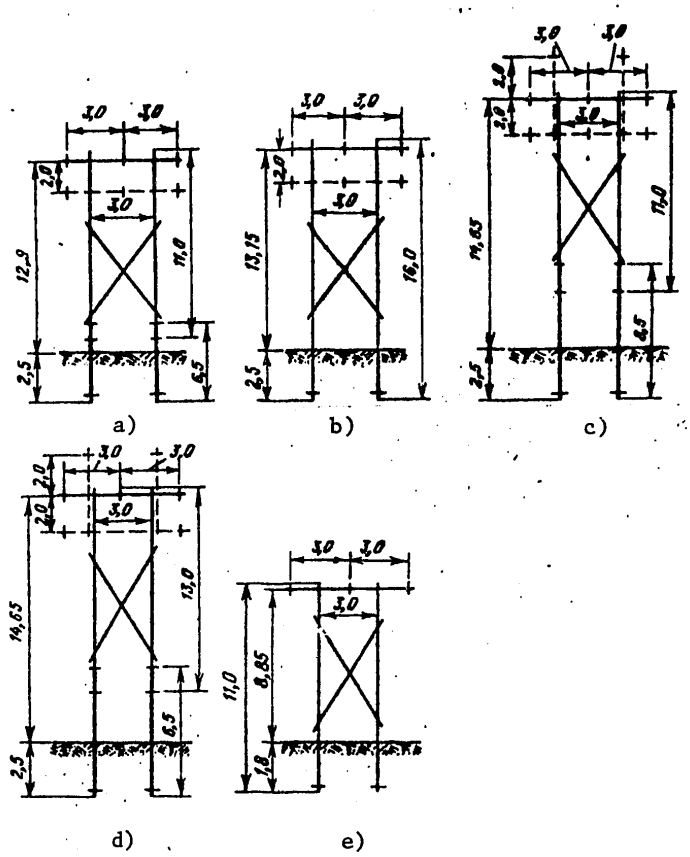

Fig. 4-6. Standardized 35-kV Wooden Towers

APPROVED FOR RELEASE: 2007/02/08: CIA-RDP82-00850R000300090014-4

APPROVED FOR RELEASE: 2007/02/08: CIA-RDP82-00850R000300090014-4

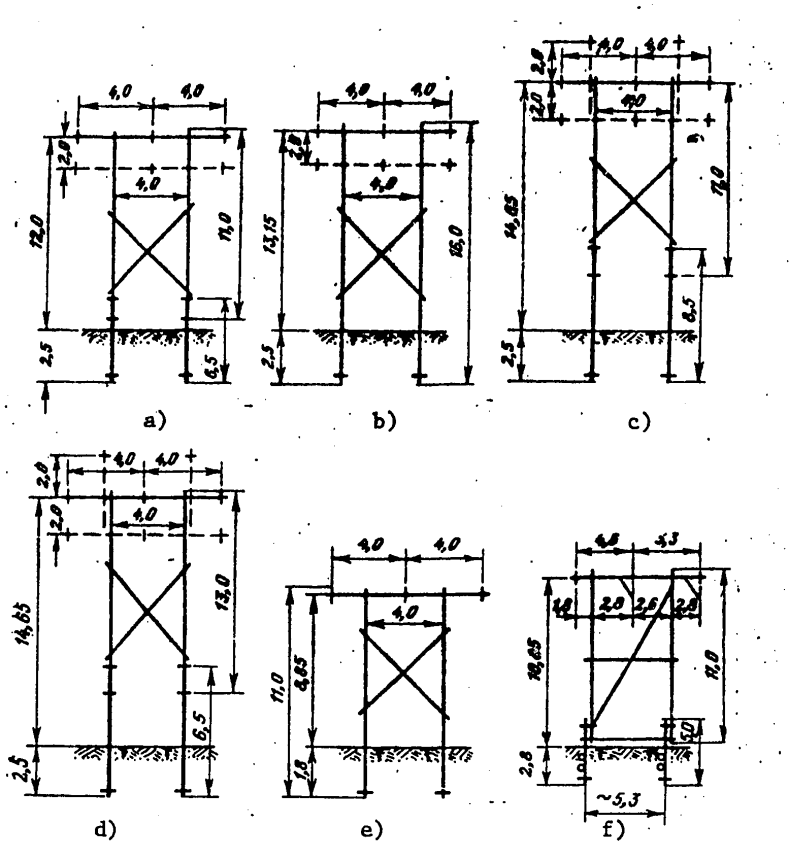

Fig. 4-7. Standardized 110-kV Intermediate Wooden Towers

APPROVED FOR RELEASE: 2007/02/08: CIA-RDP82-00850R000300090014-4

APPROVED FOR RELEASE: 2007/02/08: CIA-RDP82-00850R000300090014-4

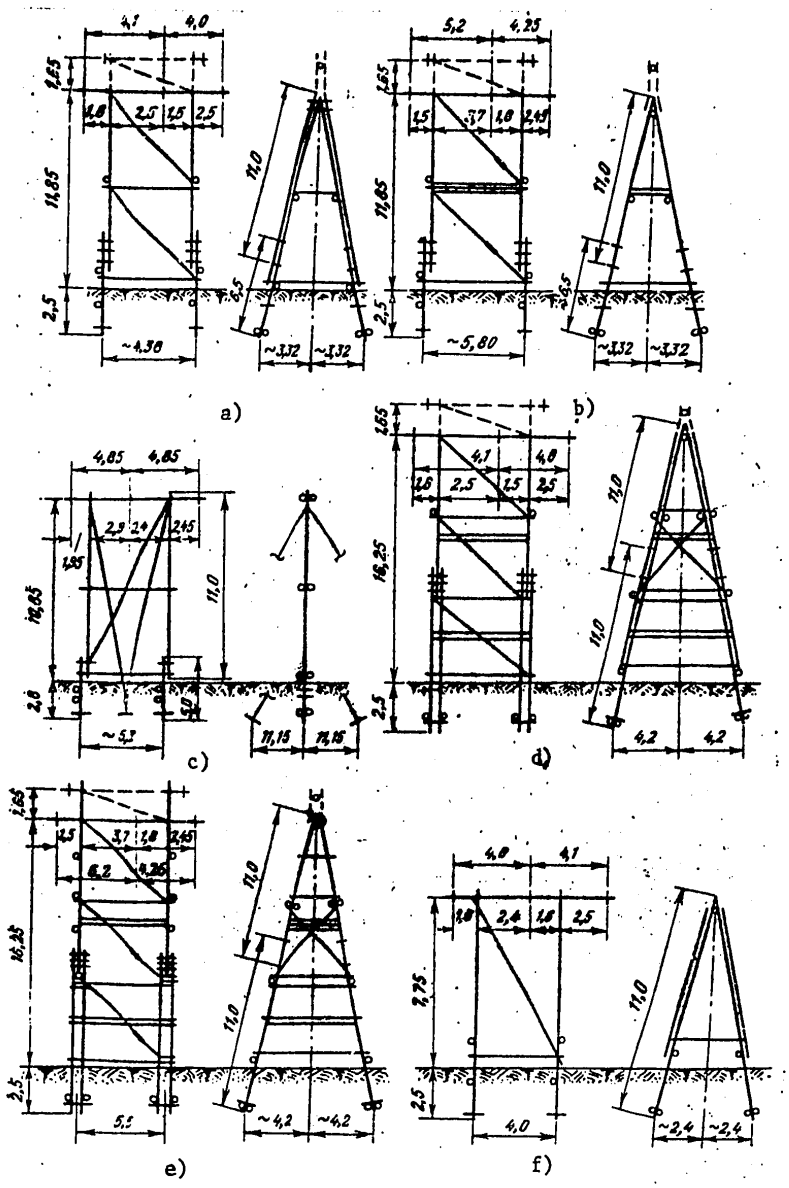

Fig. 4-8. Standardized 110-kV Anchor-type Wooden Towers

APPROVED FOR RELEASE: 2007/02/08: CIA-RDP82-00850R000300090014-4

APPROVED FOR RELEASE: 2007/02/08: CIA-RDP82-00850R000300090014-4

4-4-2. Standardized 6 to 10-kV Towers

(1) Тип и условное обозначение опоры	(2) Расчетные пролеты для проводов, м			(6) Расход материалов		(9) Масса опоры, т
	(3) ПСО-5, ПС-25	(4) АС-16—АС-50	(5) А-25—А120	(7) дерева, железобетона, м³	(8) стали, кг	
(10) *Деревянные опоры*						
(11) Промежуточная для ненаселенной местности, Пб-2, рис. 4-4,*а*	115—65	115—65	95—55	0,44	2,0	0,33
(12) То же, Пб-2*а*, рис. 4-4,*б*	115—65	115—65	95—55	0,43	2,0	0,33
(13) То же, Пб-6, рис. 4-4, *в*	115—65	115—65	95—55	0,46	2,0	0,35
(14) То же, Пб-8, рис. 4-4,*г*	60—50	65—45	60—40	0,46	2,0	0,35
(15) Угловая промежуточная УПб-2, рис. 4-4,*д*	То же, что для промежуточных опор (16)			1,21	30/26	0,95
(17) Концевая (анкерная) Кб-2 и Аб-2, рис. 4-4,*е*	(20) Те же, что для промежуточных опор			1,37	40/33	1,07
(18) Угловая анкерная на угол поворота 90°, УАб-2, рис. 4-4,*ж*,	(21) То же			2,0	72/63	1,57
(19) Ответвительная, Об-2, рис. 4-4,*з*	. .			1,45	44	1,04
(22) *Деревянные опоры с железобетонными приставками*						
(23) Промежуточная для ненаселенной местности, Пб-1, рис. 4-4,*и*	115—60	115—55	90—40	0,24/0,13	2,0	0,52
(24) То же, Пб-3, рис. 4-4,*к*	115—60	115—55	90—40	0,23/0,13	9,6	0,45
(25) То же, Пб-5, рис. 4-4,*в*	115—60	115—55	90—40	0,26/0,13	2,0	0,54
(26) То же для населенной местности, Пб-10, рис. 4-4,*л*	115—45	115—45	95—45	0,26/0,27	2,0	0,9
(27) То же на угол поворота до 10 °, Пб-10, рис. 4-4, *м*	115—45	115—45	95—40	0,39/0,28	8,6	1,05
(28) Угловая промежуточная, УПб-1, рис. 4-4,*н*	(32) Те же, что для промежуточных опор			0,76/0,29	34/30	1,37
(29) Концевая (анкерная), Кб-1 и Аб-1, рис. 4-4,*о*	(33) То же			0,92/0,29	44/35	1,5
(30) Угловая анкерная на угол поворота 90°, УАб-1, рис. 4-4,*п*	. .			1,4/0,44	78/69	2,28
(31) Ответвительная, Об-1, рис. 4-4,*р*	. .			0,92/0,29	48	1,5
(34) *Железобетонные опоры*						
(35) Промежуточная для ненаселенной местности П10-1Б, рис. 4-5,*а*	125—65	125—60	110—55	0,45	16	1,14
(36) То же, П10-3Б, рис. 4-5,*а*	115—55	115—55	90—55	0,45	22	1,15
(37) Промежуточная для населенной местности, П10-2Б, рис. 4-5,*а*	110—55	100—55	80—55	0,45	19	1,15
(38) То же, П10-4Б, рис. 4-5,*б*	95—50	100—50	85—45	0,45	26	1,15
(39) Анкерная концевая и угловая промежуточная на угол поворота до 90°, А10-1Б, А10-2Б, К10-1Б, К10-2Б, УП10-1Б, рис. 4-5,*в*	120—65/70—50	120—60/70—50	110—56/55—45	0,9	68	2,32
(40) Угловая анкерная на угол поворота до 60°, УА10-1Б, УА10-2Б, рис. 4-5,*г*	120—65/70—50	120—60/70—50	110—55/55—45	1,35	88	3,45

APPROVED FOR RELEASE: 2007/02/08: CIA-RDP82-00850R000300090014-4

APPROVED FOR RELEASE: 2007/02/08: CIA-RDP82-00850R000300090014-4

4-4-2. Continuation

(1) Тип и условное обозначение опоры	(2) Расчетные пролеты для проводов, м			(6) Расход материалов		(9) Масса опоры, т
	(3) ПСО-5—ПС-25	(4) АС-16—АС-50	(5) А-25—А-120	(7) дерева, железобетона, м³	(8) стали, кг	
(41) Ответвительная, ОА10-1Б, ОА10-2Б, рис. 4-5,д	120—65 / 70—50	120—60 / 70—50	110—55 / 55—45	0,9	83	2,33
(42) Промежуточная переходная, ПП-10, рис. 4-5,е	125—50	125—50	125—50	1,03	53	2,52
(43) Анкерная переходная облегченная, АПА-10, рис. 4-5,ж	125—50	125—50	125—50	1,03	48	2,51
(44) Анкерная и угловая анкерная переходная с оттяжками, АП-10 и УАП-10, рис. 4-5,з	150—75	150—75	150—75	1,174	231	3,07
(45) Концевая переходная с оттяжкой, КП-10, рис. 4-5,и	150—75	150—75	150—75	1,228	170	3,13
(46) Ответвительная концевая переходная с оттяжкой, ОКП-10, рис. 4-5,к	125—50	125—50	125—50	1,228	211	3,18

Key:

(1) - Tower type and nomenclature
(2) - Effective spans for conductors, m
(3) - PSO-5, PS-25
(4) - AS-16--AS-50
(5) - A-25--A-120
(6) - Material expenditure
(7) - Wood, reinforced concrete, m^3
(8) - Steel, kg
(9) - Mass of tower, t
(10)- Wooden towers
(11)- Intermediate for unpopulated areas, Pb-2, fig. 4-4, *a*
(12)- Same, Pb-2*a*, fig. 4-4, *b*
(13)- Same, Pb-6, fig. 4-4, *c*
(14)- Same, Pb-8, fig. 4-4, *d*
(15)- Angle-suspension UPb-2, fig. 4-4, *e*
(16)- Same as for intermediate towers
(17)- Dead-end (anchor) Kb-2 and Ab-2, fig. 4-4, *f*
(18)- Angle-anchor with 90° angle of deflection, UAb-2, fig. 4-4, *g*
(19)- Dividing, Ob-2, fig. 4-4, *h*
(20)- Same as for intermediate towers
(21)- Same
(22)- Wooden towers with reinforced-concrete extensions
(23)- Intermediate for unpopulated areas, Pb-1, fig. 4-4, *i*
(24)- Same, Pb-3, fig. 4-4, *j*
(25)- Same, Pb-5, fig. 4-4, *c*
(26)- Same for unpopulated areas, Pb-10, fig. 4-4, *k*
(27)- Same for deflection angle of up to 10°, Pb-10, fig. 4-4, *l*

APPROVED FOR RELEASE: 2007/02/08: CIA-RDP82-00850R000300090014-4

APPROVED FOR RELEASE: 2007/02/08: CIA-RDP82-00850R000300090014-4

(28)- Angle-suspension, UPb-1, fig. 4-4, *m*
(29)- Dead-end (anchor), Kb-1 and Ab-1, fig. 4-4, *n*
(30)- Angle-anchor with deflection angle of 90°, UAb-1, fig. 4-4, *o*
(31)- Dividing, Ob-1, fig. 4-4, *p*
(32)- Same as for intermediate towers
(33)- Same
(34)- Reinforced-concrete towers
(35)- Intermediate for unpopulated areas, P10-1B, fig. 4-5, *a*
(36)- Same, P10-3B, fig. 4-5, *a*
(37)- Intermediate for populated areas, P10-2B, fig. 4-5, *a*
(38)- Same, P10-4B, fig. 4-5, *b*
(39)- Dead-end anchor and angle-suspension with deflection angle of up to 90°, A10-1B, A10-2B, K10-2B, UP10-1B, fig. 4-5, *c*
(40)- Angle-anchor with a deflection angle of up to 60°, UA10-1B, UA10-2B, fig. 4-5, *d*
(41)- Dividing, OA10-1B, OA10-2B, fig. 4-5, *e*
(42)- Intermediate cross-over, PP-1B, fig. 4-5, *f*
(43)- Light-weight anchor cross-over, APA-10, fig. 4-5, *g*
(44)- Anchor and anchor cross-over with guys, AP10 and UAP-10, fig. 4-5, *h*
(45)- Dead-end cross-over with guy, KP-10, fig. 4-5, *i*
(46)- Dividing dead-end cross-over with guy, OKP-10, fig. 4-5, *j*

Notes:

1. Drawings for the towers were developed by the Sel'energoproyekt Institute (formerly the Sel'elektro All-Union Scientific Research and Design Institute): wooden towers are standard design 3.407-49, vol II; reinforced-concrete towers are supplements to standard design 407-U12 and standard design 407-4-2.

2. All towers are designed for wind regions I-IV.

3. Intermediate wooden towers Pb-1, Pb-2a, Pb-3, Pb-5 and Pb-6 are designed for ice regions I and II; tower Pb-8 is for regions III and IV. All other wooden towers are designed for ice regions I-IV.

4. Reinforced-concrete towers P10-1B and P10-2B are designed for wind regions I-III and ice regions I-III; towers P10-3B and P10-4B are for ice regions III and IV in wind regions I-III and for ice regions I-IV in wind region IV. Similar towers P10-3BM and P10-4BM can also be employed in wind region V when the effective spans are reduced by 5-10 m.

All other reinforced-concrete towers are designed for wind regions I-IV except for cross-over towers designed for ice regions I-III.

5. The effective spans between reinforced-concrete anchor towers can be 10 percent less than the effective spans between anchor towers and intermediate towers adjacent to them (less, that is, than the spans indicated in the table for anchor towers: the numerator for unpopulated areas, the demoninator for populated areas).

6. In accordance with order No. 152 of the USSR Minenergo from 1 Aug 1970, it is customary when determining the values for effective spans to base the maximum nor-

APPROVED FOR RELEASE: 2007/02/08: CIA-RDP82-00850R000300090014-4

APPROVED FOR RELEASE: 2007/02/08: CIA-RDP82-00850R000300090014-4

mal value of the wind's velocity head and the thickness of the ice glaze on a frequency of one time in 10 years.

7. All metal parts of wooden and reinforced-concrete towers must be protected from corrosion by a durable anticorrosion covering.

8. Unused holes in wooden parts must be sealed with bitumen-impregnated wooden plugs.

9. The expenditure of steel for wooden towers is indicated: in the numerator for populated areas, in the denominator for unpopulated areas.

10. The angle of deflection must not exceed 80° when supporting AS-35, AS-50, A-70 to A-120, PSO-5 and PS-25 conductors on UAB-1 and UAB-2 towers in category II soils.

11. The mass of metal for reinforced-concrete towers is indicated without considering the reinforcements in the concrete parts.

4-4-3. Standardized 35-kV Wooden Towers

	(1) Тип и условное обозначение	(2) Расчетные условия		(5) Расчетные пролеты, м				(11) Расход материалов	
		(3) Провод / Трос	(4) Район гололедности	(6) габаритный: (7) без тросов	(6) габаритный: (8) с тросами	(9) ветровой	(10) весовой	(12) дерева, м³: (14) на пасынках / на сваях	(13) металла, кг: (15) без троса / с тросом
(16)	Промежуточная одноцепная П-образная свободностоящая, ПД35-1, рис. 4-6,*а*	АС-50 / С-35	I	240	—	310	550	2,2 / 2,3	43 / 51
			II	185		230	365		
			III	140		180	235		
			IV	120		150	170		
		АС-70 / С-35	I	255	—	320	640		
			II	200		260	450		
			III	165		200	305		
			IV	135		170	220		
		АС-95 / С-35	I	275	—	340	240		
			II	240		280	555		
			III	180		230	385		
			IV	155		190	280		
		АС-120 / С-35	I	275	—	350	740		
			II	250		320	420		
			III	205		260	65		
			IV	175		220	245		

APPROVED FOR RELEASE: 2007/02/08: CIA-RDP82-00850R000300090014-4

APPROVED FOR RELEASE: 2007/02/08: CIA-RDP82-00850R000300090014-4

4-4-3. Continuation

(1) Тип и условное обозначение	(2) Расчетные условия: (3) Провод / Трос	(4) Район гололедности	(5) Расчетные пролеты, м: (6) габаритный: (7) без тросов	(8) с тросами	(9) ветровой	(10) весовой	(11) Расход материалов: (12) дерева, м³: (14) на пасынках / на сваях	(13) металла, кг: (15) без троса / с тросом
(17) Промежуточная одноцепная П-образная свободностоящая, ПД35-3, рис. 4-6,*а*	АС-150† / С-50	I	275	—	360	660	2,6 / 2,6	43 / 51
		II	265		330	505		
		III	220		280	325		
		IV	190		240	305		
(18) То же, но без пасынков или свай, ПД35-5, рис. 4-6,*б*	АС-50 / С-35	I	245	—	310	550	3,1 / 3,2	31 / 39
		II	190		230	365		
		III	145		180	235		
		IV	120		150	170		
	АС-70 / С-35	I	260	205	320	640		
		II	205	170	260	450		
		III	165	140	305	305		
		IV	140	115	170	220		
	АС-95 / С-35	I	270	205	340	740		
		II	225	185	280	555		
		III	185	155	230	385		
		IV	155	130	190	280		
	АС-120 / С-35	I	280	215	360	925		
		II	255	210	320	605		
		III	210	175	260	505		
		IV	180	150	220	350		
	АС-150 / С-50	I	280	215	360	915		
		II	270	215	330	540		
		III	230	190	280	455		
		IV	195	160	240	320		
(19) Промежуточная одноцепная П-образная свободностоящая повышенная, ПДС35-1, рис. 4-6,*в*	АС-50 / С-35 — АС-150 / С-50	I—IV	Те же, что для опор ПД35-1 и ПД35-3 (20)				(21) Без троса 3,0 / 3,1	43
							(22) С тросом 3,3 / 3,4	51
(23) Промежуточная одноцепная П-образная свободностоящая повышенная из лиственницы зимней рубки, ПДС35-5, рис. 4-6,*г*	АС-50 / С-35	I	275	235	310	550	3,3 / 3,4	48 / 63
		II	210	180	230	365		
		III	165	135	180	235		
		IV	135	115	150	170		
	АС-70 / С-35	I	290	250	320	640		
		II	230	195	260	450		
		III	185	160	200	305		
		IV	155	130	170	220		
	АС-95 / С-35	I	300	255	340	740		
		II	250	215	280	555		
		III	205	175	230	385		
		IV	175	150	190	280		
	АС-120 / С-35	I	320	270	335*	925		
		II	285	245	320	610		
		III	235	200	260	385		
		IV	20	170	220	270		

APPROVED FOR RELEASE: 2007/02/08: CIA-RDP82-00850R000300090014-4

APPROVED FOR RELEASE: 2007/02/08: CIA-RDP82-00850R000300090014-4

4-4-3. Continuation

(1) Тип и условное обозначение	(2) Расчетные условия		(5) Расчетные пролеты, м				(11) Расход материалов	
	(3) Провод / Трос	(4) Район гололедности	(6) габаритный (7) без тросов	(8) с тросами	(9) ветровой	(10) весовой	(12) дерева, м³ (14) на пасынках / на сваях	(13) металла, кг (15) без троса / с тросом
(24) Промежуточная одноцепная П-образная свободностоящая повышенная из лиственницы зимней рубки, ПДС35-5, рис. 4-6, г	АС-150 / С-50	I	320	270	360	1 020	3,8 / 3,8	55 / 63
		II	300	260	330	710		
		III	255	220	280	460		
		IV	215	190	240	320		
(25) Промежуточная одноцепная П-образная свободностоящая пониженная без троса, ПДС35-11, рис. 4-6,д	АС-50	I	—	—	310	550		
		II	—	—	230	365		
		III	—	—	180	235		
		IV	—	—	150	170		
	АС-70	I	—	—	320*	640		
		II	—	—	260*	450		
		III	—	—	200*	305		
		IV	—	—	170*	220		
	АС-95	I	—	—	340*	740	1,7 / 1,7	31 / 31
		II	—	—	280*	555		
		III	—	—	230*	385		
		IV	—	—	190*	265		
	АС-120	I	—	—	310*	925		
		II	—	—	310*	570		
		III	—	—	260*	370		
		IV	—	—	220*	245		
	АС-150	I	—	—	280*	860		
		II	—	—	280*	505		
		III	—	—	280*	325		
		IV	—	—	230*	230		

Key:

† - Russian C is equivalent to English S
(1) - Type and nomenclature
(2) - Estimated conditions
(3) - Conductor/Cable
(4) - Ice area
(5) - Effective spans, m
(6) - Overall span
(7) - Without cables
(8) - With cables
(9) - Wind span
(10)- Weight span
(11)- Material expenditure
(12)- Wood, m^3

APPROVED FOR RELEASE: 2007/02/08: CIA-RDP82-00850R000300090014-4

APPROVED FOR RELEASE: 2007/02/08: CIA-RDP82-00850R000300090014-4

(13)- Metal, kg
(14)- On lateral beams/On piles
(15)- Without cable/With cable
(16)- Intermediate single-circuit П-shaped free-standing PD35-1, fig. 4-6, *a*
(17)- Intermediate single-circuit П-shaped free-standing PD35-3, fig. 4-6, *a*
(18)- Same, but without beams or piles, PD35-5, fig. 4-6, *b*
(19)- Intermediate single-circuit П-shaped free-standing extended, PDS35-1, fig. 4-6, *c*
(20)- Same as for PD35-1 and PD35-3 towers
(21)- Without cable
(22)- With cable
(23)- Intermediate single-circuit П-shaped free-standing extended, made from winter-cut larch, PDS35-5, fig. 4-6, *d*
(24)- Intermediate single-circuit П-shaped free-standing extended, made from winter-cut larch, PDS35-5, fig. 4-6, *d*
(25)- Intermediate single-circuit П-shaped free-standing extended without cable, PDS35-11, fig. 4-6, *e*

Notes:

1. Towers for wind regions I-IV were developed by the Ukranian branch of Energoset'proyekt in 1969.

2. Second-grade factory-impregnated pine or non-impregnated winter-cut larch are used for towers in accordance with State Standard 9463-60.

3. It is permitted to increase the diameters of tower parts by up to 2 cm.

4. All metal parts must be protected from corrosion (see para. 1-7-1).

5. All holes in the wooden parts must be drilled on-site. Unused holes must be tightly sealed with bitumen-impregnated wooden plugs.

6. Towers with cables are constructed on the base of cableless towers with the cross-piece lowered by 2 m and with the installation of cable brackets.

7. Working drawings have been developed (record No. 5293 TM) according to standard design No. 407-4-40 for the temporary installation of wooden towers on 35, 110 and 220-kV lines.

8. When PD35-1, PD35-3, PD35-5 and PDS35-1 towers are installed in ice region IV, the diameter of the cross-piece must be increased by 2 cm as opposed to the diameter indicated in the diagram.

When installing PD35-1 and PD35-3 towers in wind region V, three bolts of 24-mm diameter are required to connect the support to the beams or to the piles.

9. Wind spans must be reduced by approximately 10 percent for the PD35-1 tower in wind regions IV and V when supporting the AS-120 conductor in ice regions I and II as well as for the PD35-5 tower in wind region V and ice region I when supporting the AS-150 conductor.

APPROVED FOR RELEASE: 2007/02/08: CIA-RDP82-00850R000300090014-4

APPROVED FOR RELEASE: 2007/02/08: CIA-RDP82-00850R000300090014-4

10. When using PDS35-1 towers on overhead lines with AS-50 to AS-120 conductors, the diameters of the parts of the tower can be reduced by 2 cm and the expenditure of wood, accordingly, can be reduced by 0.5 m^3.

11. The dimensions of the wind and weight spans are given for towers with out cables when they are set in medium soils. For loose soils, the point where the tower is secured in the ground must be reinforced.

12. The same anchor-angle towers used on 35-kV lines are also used on 110-kV lines in accordance with para. 4-4-4.

13. The wind spans for the PDS35-11 tower noted with an asterisk are cited for wind regions I and II. In regions III, IV and V the wind spans must be reduced.

4-4-4. Standardized 110-kV Wooden Towers

(1) Тип и условное обозначение	(2) Расчетные условия		(5) Расчетные пролеты, м				(11) Расход материалов	
	(3) Провод / Трос	(4) Район гололедности	(6) габаритный (7) без троса	(8) с тросом	(9) ветровой	(10) весовой	(12) дерева, м³ (14) на пасынках / на связях	(13) металла, кг (15) без троса / с тросом
(16) Промежуточная одноцепная свободностоящая, ПД110-1, рис. 4-7,*а*	АС-70 / С-50 †	I	240	180	350	600	2,3 / 2,4	43 (39) / 51 (47)
		II	190	155	290	450		
		III	155	125	220	305		
		IV	130	105	190	220		
	АС-95 / С-50	I	250	180	345	600		
		II	210	170	305	480		
		III	170	140	250	295		
		IV	145	115	210	265		
(17) Промежуточная одноцепная П-образная свободностоящая, ПД110-1, рис. 4-7,*а*	АС-120 / С-50	I	260	190	310	600	2,3 / 2,4	43 (39) / 51 (47)
		II	240	190	310	430		
		III	195	160	260	270		
		IV	170	135	210	245		
(18) То же, ПД110-3, рис. 4-7,*а*	АС-150 / С-50	I	260	195	360	550	2,8 / 2,9	44 (40) / 52 (48)
		II	255	185	360	450		
		III	215	170	310	355		
		IV	185	145	260	280		
	АС-185 / С-50	I	255	190	325	485		
		II	230	190	325	430		
		III	200	160	315	290		
		IV	175	140	260	270		

APPROVED FOR RELEASE: 2007/02/08: CIA-RDP82-00850R000300090014-4

APPROVED FOR RELEASE: 2007/02/08: CIA-RDP82-00850R000300090014-4

4-4-4. Continuation

(1) Тип и условное обозначение	(2) Расчетные условия: (3) Провод / Трос	(4) Район гололедности	(5) Расчетные пролеты, м: (6) габаритный: (7) без троса	(8) с тросом	(9) ветровой	(10) весовой	(11) Расход материалов: (12) дерева, м³: (14) на пасынках / на сваях	(13) металла, кг: (15) без троса / с тросом
(19) То же, но без пасынков или свай из лиственницы зимней рубки, ПД110-5, рис. 4-7,б	АС-70 / С-50	I	245	190	350	600		
		II	195	160	290	450		
		III	160	130	220	305		
		IV	135	110	190	220		
	АС-95 / С-50	I	255	190	380	600		
		II	215	175	310	500		
		III	175	145	250	385		
		IV	150	120	210	280		
	АС-120 / С-50	I	265	200	400	600		
		II	245	200	350	450	3,2	31
		III	200	165	290	390	3,2	39
		IV	175	140	240	270		
	АС-150 / С-50	I	270	200	400	600		
		II	260	200	370	400		
		III	220	175	310	355		
		IV	190	150	260	255		
	АС-185 / С-50	I	260	190	400	575		
		II	235	190	370	355		
		III	205	165	310	325		
		IV	180	145	260	230		
(20) Промежуточная одноцепная П-образная свободностоящая повышенная, ПДС110-1, рис. 4-7,в	АС-70—АС-185 / С-50	I—IV	(21) Те же, что для опор ПД110-1 и ПД110-3				(22) Без троса: 3,2 / 3,3	44 / 52
							(23) С тросом: 3,5 / 3,6	(40) / (48)
(24) Промежуточная одноцепная П-образная свободностоящая повышенная из лиственницы зимней рубки, ПДС110-5, рис. 4-7,г	АС-70 / С-50	I	280	235	350	600		
		II	220	190	290	450		
		III	180	150	220	305		
		IV	150	125	190	220		
	АС-95 / С-50	I	290	240	380	600		
		II	245	205	310	490	3,4	48
		III	200	170	250	300	3,4	(44) / 56
		IV	170	145	210	270		(52)
	АС-120 / С-50	I	305	250	345*	600		
		II	275	235	345*	440		
		III	225	195	250*	275		
		IV	195	165	205*	250		

APPROVED FOR RELEASE: 2007/02/08: CIA-RDP82-00850R000300090014-4

APPROVED FOR RELEASE: 2007/02/08: CIA-RDP82-00850R000300090014-4

4-4-4. Continuation

(1) Тип и условное обозначение	(2) Расчетные условия (3) Провод / Трос	(4) Район гололедности	(5) Расчетные пролеты, м (6) габаритный (7) без троса	(8) с тросом	(9) ветровой	(10) весовой	(11) Расход материалов (12) дерева, м³ (14) на пасынках / на сваях	(13) металла, кг (15) без троса / с тросом
	АС-150 / С-50	I	305	190	400	600	3,9 / 3,9	49 (44) / 64 (59)
		II	290	180	370	520		
		III	245	165	310	335		
		IV	210	140	260	260		
	АС-185 / С-50	I	305	185	365	600		
		II	265	185	365	460		
		III	230	155	305	305		
		IV	200	135	250	225		
(25) Промежуточная одноцепная П-образная свободностоящая пониженная без троса, ПДС110-11, рис. 4-7,*д*	АС-70	I	—	—	350	600	1,9 / 1,9	31 / —
		II	—	—	290	450		
		III	—	—	220	305		
		IV	—	—	190	220		
	АС-95	I	—	—	380	600		
		II		—	310	600		
		III	—	—	250	380		
		IV	—	—	210	255		
	АС-120	I	—	—	400*	600		
		II	—	—	350*	555		
		III	—	—	290*	350		
		IV	—	—	240*	240		
	АС-150	I	—	—	400*	600		
		II	—	—	370*	490		
		III	—	—	310*	320		
		IV	—	—	220*	220		
	АС-185	I	—	—	400*	600		
		II	—	—	370*	475		
		III	—	—	290*	290		
		IV	—	—	205*	205		
(26) Промежуточная угловая одноцепная П-образная свободностоящая на углы поворота 1—30° без троса, ПД110-9, рис. 4-7,*е*	АС-50—АС-185	I—IV	—	—	—	—	4,3 / 4,5	187 (199) / —
(27) Анкерно-угловая одноцепная АП-образная свободностоящая без троса, УД110-1, рис. 4-8,*а*	АС-50—0 —60°; АС-70—0 —50°; АС-95—0 —35°; АС-120—0 —20°; АС-150 и АС-185—0 —15°	I—IV	—	—	—	—	6,8 / —	298 / —
(28) То же на угол 0—60°, УД110-5, рис. 4-8,*б*	АС-50—АС-120	I—IV	—	—	—	—	6,8 / —	501 / —
	АС-150 и АС-185	I—IV	—	—	—	—	7,1 / —	558 / —

APPROVED FOR RELEASE: 2007/02/08: CIA-RDP82-00850R000300090014-4

APPROVED FOR RELEASE: 2007/02/08: CIA-RDP82-00850R000300090014-4

4-4-4. Continuation

(1) Тип и условное обозначение	(2) Расчетные условия: (3) Провод / Трос	(4) Район гололедности	(5) Расчетные пролеты, м: (6) Габаритный: (7) без троса	(8) с тросом	(9) ветровой	(10) весовой	(11) Расход материалов: (12) дерева, м³: (14) на пасынках / на сваях	(13) металла, кг: (15) без троса / с тросом
(29) Анкерно-угловая одноцепная АП-образная свободностоящая с тросом (на базе опоры УД110-1). УД110-3, рис. 4-8,*а*	АС-50—0 —25°; АС-70 и АС-95—0 —15°; АС-120—АС-185—0 —9° / С-35 и С-50	I—IV	—	—	—	—	7,1 / —	— / 483
(30) То же (на базе опоры УД110-5), УД110-7, рис. 4-8,*б*	АС-50—0 —60°; АС-70 и АС-95—0 —50°; АС-120—0 —40°	I—IV	—	—	—	—	7,2 / —	— / 691
	АС-150 и АС-185—0 —35° / С-35, С-50	I—IV	—	—	—	—	7,5 / —	— / 748
(31) Анкерно-угловая одноцепная П-образная на оттяжках без троса на угол поворота 0—30 ° и 30—60 °, УД110-9, рис. 4-8,*в*	АС-50—АС-185 / С-35, С-50	I—IV	—	—	—	—	4,9 / 5,7	706 (521) / —
(32) Анкерно-угловая АП-образная одноцепная без тросов повышенная УДС110-1, рис. 4-8,*г*	АС-50—0 —80°; АС-70—0 —40°; АС-95—0 —35°; АС-120—0 —23°; АС-150 и АС-185—0 —18°	I—IV	—	—	—	—	10,7 / —	403 / —
(33) То же, но с металлическими тягами, УДС110-3, рис. 4-8,*д*	АС-50—30 —90° АС-70—40 —90° АС-95—35 —90° АС-120—23 —80°	I—IV	—	—	—	—	10,3 / —	692 / —
	АС-150 и АС-185—18 —60°	I—IV	—	—	—	—	13,3 / —	805 / —
(34) Анкерно-угловая АП-образная одноцепная без тросов пониженная, УДС110-5, рис. 4-8,*е*	АС-50—0 —90°; АС-70; АС-95—0 —65°; АС-120—0 —48°; АС-150 и АС-185—0 —37°	I—IV	—	—	—	—	4,3 / —	209 / —

Key:

† - Russian C is equivalent to English S
(1) - Type and nomenclature
(2) - Estimated conditions
(3) - Conductor/Cable
(4) - Ice area
(5) - Effective spans, m
(6) - Overall span

APPROVED FOR RELEASE: 2007/02/08: CIA-RDP82-00850R000300090014-4

APPROVED FOR RELEASE: 2007/02/08: CIA-RDP82-00850R000300090014-4

(7) - Without cables
(8) - With cables
(9) - Wind span
(10)- Weight span
(11)- Material expenditure
(12)- Wood, m^3
(13)- Metal, kg
(14)- On lateral beams/On piles
(15)- Without cable/With cable
(16)- Intermediate single-circuit free-standing, PD110-1, fig. 4-7, *a*
(17)- Intermediate single-circuit П-shaped free-standing, PD110-1, fig. 4-7, *a*
(18)- Same, PD110-3, fig. 4-7, *a*
(19)- Same, without beams or piles, made from winter-cut larch, PD110-5, fig. 4-7, *b*
(20)- Intermediate single-circuit free-standing П-shaped extended, PDS110-1, fig. 4-7, *c*
(21)- Same as for towers PD110-1 and PD110-3
(22)- Without cable
(23)- With cable
(24)- Intermediate single-circuit П-shaped free-standing extended, made from winter-cut larch, PDS110-5, fig. 4-7, *d*
(25)- Intermediate single-circuit П-shaped free-standing lowered, without cable, PDS110-11, fig. 4-7, *e*
(26)- Angle-suspension П-shaped free-standing without cable with 1-30° angle of deflection, PD110-9, fig. 4-7, *f*
(27)- Anchor-angle single-circuit АП-shaped free-standing without cable, UD110-1, fig. 4-8, *a*
(28)- Same, with 0-60° angle of deflection, UD110-5, fig. 4-8, *b*
(29)- Anchor-angle single-circuit АП-shaped free-standing with cable (based on the UD110-1), UD110-3, fig. 4-8, *a*
(30)- Same (on the base of the UD110-5), UD110-7, fig. 4-8, *b*
(31)- Anchor-angle single-circuit П-shaped on guys without cable, with 0-30° and 30-60° angle of deflection, UD110-9, fig. 4-8, *c*
(32)- Anchor-angle АП-shaped single-circuit without cables, extended, UDS110-1, fig. 4-8, *d*
(33)- Same, but with metal stays, UDS110-3, fig. 4-8, *e*
(34)- Anchor-angle АП-shaped single-circuit without cables, lowered, UDS110-5, fig. 4-8, *f*

Notes:

1. See paras. 1-7, 4-4-3.

2. Wind spans for the PD110-1 tower for the AS-95 conductor in wind regions III, IV, and V and in ice region I are taken to be, respectively, 305, 370 and 310 m. For the AS-120 conductor in ice regions I and II, the spans are 270, 310 and 275 m. The wind spans for the PD110-1 tower for the AS-120 conductor in wind regions IV and V are taken to be 290 and 270 m in ice region III and 240 and 220 m in ice region IV. The wind spans for the PD110-3 tower depend upon the wind region in accordance with the data cited below:

APPROVED FOR RELEASE: 2007/02/08: CIA-RDP82-00850R000300090014-4

APPROVED FOR RELEASE: 2007/02/08: CIA-RDP82-00850R000300090014-4

(1) Марка провода		(2) AC-150				(3) AC-185			
(4) Район гололедности		I	II	III	IV	I	II	III	IV
(5) Районы по ветру	I и II	360	360	310	260	325	325	315	260
	III	310	310	310	260	280	280	280	260
	IV	390	370	310	260	350	350	310	245
	V	325	325	285	225	290	290	265	215

Key:

(1) - Type of conductor
(2) - AS-150
(3) - AS-185
(4) - Ice area
(5) - Wind areas

The wind spans for the PD110-5 tower for AS-120, AS-150 and AS-185 conductors depend upon the wind region in accordance with the data cited below:

(1) Марка провода		(2) AC-120				(3) AC-150				(4) AC-185			
(5) Район гололедности		I	II	III	IV	I	II	III	IV	I	II	III	IV
(6) Районы по ветру	I и II	400	350	290	240	400	370	310	260	400	370	310	260
	III	400	350	290	240	400	370	310	260	365	365	310	260
	IV	375	350	290	240	335	335	310	260	305	305	305	260
	V	375	350	290	240	335	335	310	260	300	300	300	260

Key:

(1) - Type of conductor
(2) - AS-120
(3) - AS-150
(4) - AS-185
(5) - Ice area
(6) - Wind area

3. When installing PD110-5 and PD110-3 towers in ice region IV and PD110-5 towers in ice regions III and IV, the diameter of the cross-piece must be increased by 2 cm as opposed to that indicated in the tower drawing.

4. When using the PDS110-1 tower on 110-kV overhead lines with AS-70 to AS-120 conductors, the diameters of the tower parts can be reduced by 2 cm and the expenditure of wood by 0.5 m^3, accordingly.

5. The dimensions of wind and weight spans are given for towers without cables, when they are set in medium soils.

6. The wind spans for the PDS110-5 and PDS110-11 towers marked with an asterisk are cited for wind regions I and II. In regions III, IV and V, the wind spans must be reduced.

APPROVED FOR RELEASE: 2007/02/08: CIA-RDP82-00850R000300090014-4

APPROVED FOR RELEASE: 2007/02/08: CIA-RDP82-00850R000300090014-4

7. The angles of deflection for anchor-angle towers are cited for wind region III and ice regions I-IV for the overall spans of normal intermediate towers without cables.

8. When using the PD110-9 tower for AS-50 to AS-95 conductors, it is permissible to replace the 22-cm strut with one of 18 cm and the beams and piles of 30-cm diameters with ones of 24 cm. In this case, the expenditure of wood in the tower will decrease by 0.5 m^3 for the beams and 1.1 m^3 for the piles.

9. In wind regions IV and V, a deflection angle of up to 25° is permissible for the PD110-9 tower with AS-150 or AS-185 conductors.

4-4-5. Semifinished-log and Half-rail Cross-pieces for 35 to 110-kV Wooden Towers

(1) Условное обозначение опоры	(2) Марка провода	(3) Из полубревен		(6) Из брусков	
		(4) Диаметр в отрубе, *см*	(5) Объем древесины на траверсу, $м^3$	(7) Сечение, *мм*	(8) Объем древесины на траверсу, $м^3$
		(9) *ВЛ 35 кв (рис. 4-9)*			
PD35-1	AC-50, AC-70†	18	0,21	100×150	0,2
	AC-95	18	0,21	100×200	0,26
	AC-120	20	0,26	100×200	0,26
PD35-3	AC-150	22	0,31	130×150	0,25
PD35-5	AC-50, AC-70	18	0,21	100×150	0,2
	AC-95	18	0,21	100×200	0,26
	AC-120	18	0,21	100×200	0,26
	AC-150	20	0,26	130×150	0,25
PDS35-1	AC-50, AC-70	18	0,21	100×150	0,2
	AC-95	18	0,21	100×200	0,26
	AC-120	20	0,26	100×200	0,26
	AC-150	22	0,31	130×150	0,25
PDS35-5	AC-50	18	0,26	100×150	0,2
	AC-70, AC-95	18	0,26	100×200	0,26
	AC-120	20	0,32	100×200	0,26
	AC-150	20	0,32	100×200	0,26
PDS35-11	AC-50, AC-70	18	0,21	100×150	0,2
	AC-95	18	0,21	100×200	0,26
	AC-120	20	0,26	100×200	0,26
	AC-150	22	0,31	130×150	0,25
		(10) *ВЛ 110 кв (рис. 4-10)*			
PD110-1	AC-70	18	0,3	100×180	0,3
	AC-95	20	0,36	130×180	0,4
	AC-120	22	0,43	130×180	0,4
PD110-3	AC-150, AC-185	22	0,43	150×200	0,51
PD110-5	AC-70	18	0,3	100×180	0,3
	AC-95	20	0,36	100×180	0,3
	AC-120	22	0,43	130×180	0,4
	AC-150, AC-185	22	0,43	150×200	0,51
PDS110-1	AC-70	18	0,3	100×180	0,3
	AC-95	20	0,36	150×200	0,51
	AC-120	22	0,43	150×200	0,51
	AC-150, AC-185	22	0,43	150×200	0,51

APPROVED FOR RELEASE: 2007/02/08: CIA-RDP82-00850R000300090014-4

APPROVED FOR RELEASE: 2007/02/08: CIA-RDP82-00850R000300090014-4

4-4-5. Continuation

(1) Условное обозначение опоры	(2) Марка провода	(3) Из полубревен		(6) Из брусков	
		(4) Диаметр в отрубе, см	(5) Объем древесины на траверсу, м³	(7) Сечение, мм	(8) Объем древесины на траверсу, м³
PDS110-5	AC-70	20	0,45	100×180	0,3
	AC-95	20	0,45	130×180	0,4
	AC-120	22	0,54	130×180	0,4
	AC-150, AC-185	22	0,54	150×200	0,51
PDS110-11	AC-70	18	0,3	100×180	0,3
	AC-95	20	0,36	130×180	0,4
	AC-120	22	0,43	130×180	0,4
	AC-150, AC-185	22	0,43	150×200	0,51

Key:

† - Russian C is equivalent to English S
(1) - Tower nomenclature
(2) - Type of conductor
(3) - From semifinished logs
(4) - Butt-end diameter
(5) - Volume of wood in cross-piece, m^3
(6) - From beams
(7) - Section, mm
(8) - Volume of wood in cross-piece, m^3
(9) - 35-kV overhead lines (fig. 4-9)
(10)- 110-kV overhead lines (fig. 4-10)

Notes:

1. Drawings were developed by the Ukranian branch of Energoset'proyekt in 1969.

2. The design for semifinished-log and beam cross-pieces has been planned for the loads on weight spans equal to 1.25 times the overall span.

3. When using the PD35-5 tower in ice region IV with AS-120 conductors, a semifinished-log cross-piece of 20-cm diameter is required.

4. When using the PD35-3, PD35-5, PDS35-1 and PDS35-11 towers in ice region IV with AS-150 conductors, a beam cross-piece of 100x200-mm section is required.

5. When using the PDS110-5 tower in ice region IV with AS-150 and AS-185 conductors, a semifinished-log cross-piece of 24-cm diameter is required.

APPROVED FOR RELEASE: 2007/02/08: CIA-RDP82-00850R000300090014-4

APPROVED FOR RELEASE: 2007/02/08: CIA-RDP82-00850R000300090014-4

4-4-6. Standardized 220-kV Wooden Towers

(1) Тип и условное обозначение	(2) Расчетные условия			(6) Расчетные пролеты, м			(10) Расход материалов	
	(3) Провод / Трос	(4) Район гололедности	(5) Район по ветру	(7) габаритный	(8) ветровой	(9) весовой	(11) дерева, м³ (13) без троса / с тросом	(12) металла, кг (14) без троса / с тросом
(15) Промежуточная одноцепная П-образная свободностоящая, ПД220-1, рис. 4-11,*а*	АСО-300 / С-70	I	I—IV	250	400	820	5,0 / 5,72	94 / 118
		II		250	400	535		
		III		235	350	375		
		IV		210	270	270		
		I	V	250	335	820		
		II		250	335	535		
		III		235	335	375		
		IV		210	270	270		
	АСО-400 / С-70	I	I—IV	230	340	660		
		II		230	340	445		
		III		205	300	320		
		IV		185	240	240		
		I	V	230	290	660		
		II		230	290	445		
		III		205	290	320		
		IV		185	240	240		
	АСО-500 / С-70	I	I—IV	210	310	550		
		II		210	310	395		
		III		190	280	285		
		IV		175	220	220		
		I	V	210	270	550		
		II		210	270	395		
		III		190	270	285		
		IV		175	220	220		
(16) Промежуточная одноцепная П-образная свободностоящая, но без пасынков, ПД220-3, рис. 4-11,*б*	АСО-300 / С-70	I	I—V	250	400	920	5,8 / 6,8	76 / 101
		II		250	400	600		
		III		235	350	420		
		IV		210	305	305		
	АСО-400 / С-70	I	I—V	230	340	740		
		II		230	340	500		
		III		205	300	360		
		IV		185	270	270		
	АСО-500 / С-70	I	I—V	210	310	625		
		II		210	310	440		
		III		190	280	320		
		IV		175	245	245		
(17) Промежуточная одноцепная П-образная пониженная свободностоящая, ПДС200-1, рис. 4-11,*в*	АСО-300 / С-70	I	I—III	—	400	820		
		II		—	400	535		
		III		—	350	375		
		IV		—	270	270		
		I	IV	—	385	820		
		II		—	385	535		
		III		—	350	375		
		IV		—	270	270		
		I	V	—	320	820		
		II		—	320	535		
		III		—	320	375		
		IV		—	270	270		

APPROVED FOR RELEASE: 2007/02/08: CIA-RDP82-00850R000300090014-4

APPROVED FOR RELEASE: 2007/02/08: CIA-RDP82-00850R000300090014-4

4-4-6. Continuation

(1) Тип и условное обозначение	(2) Расчетные условия (3) Провод/Трос	(4) Район гололедности	(5) Район по ветру	(6) Расчетные пролеты, м (7) габаритный	(8) ветровой	(9) весовой	Расход материалов (10) (11) дерева, м³ (13) без троса/с тросом	(12) металла, кг (14) без троса/с тросом
	АСО-400/С-70	I	I—IV	—	340	660	3,5/4,2	75/99
		II		—	340	445		
		III		—	300	320		
		IV		—	240	240		
		I	V	—	280	660		
		II		—	280	445		
		III		—	280	320		
		IV		—	240	240		
	АСО-500/С-70	I	I—III	—	310	560		
		II		—	310	395		
		III		—	280	285		
		IV		—	220	220		
		I	IV	—	300	560		
		II		—	300	395		
		III		—	280	285		
		IV		—	220	220		
		I	V	—	255	560		
		II		—	255	395		
		III		—	255	285		
		IV		—	220	220		
(18) Анкерная, угловая одноцепная без тросов на угол поворота 0—7°, УД220-1, рис. 4-12,*а*	АСО-300, АСО-400, АСО-500/С-70	I—IV	I—V	—	—	—	11,0/—	561/—
(19) То же, но с тросом на угол поворота 0—3°, УД220-5, рис. 4-12,*а*	АСО-300, АСО-400, АСО-500/С-70	I—IV	I—V	—	—	—	—/11,6	—/796
(20) Анкерная угловая одноцепная без тросов на угол поворота до 50—60°, УД220-3, рис. 4-12,*а*	АСО-300, АСО-400, АСО-500	I—IV	I—V	—	—	—	11,0/—	892/—
(21) То же, но с тросами на угол поворота до 32—41°, УД220-7, рис. 4-12,*а*	АСО-300, АСО-400, АСО-500/С-70	I—IV	I—V	—	—	—	—/11,6	—/1 127
(22) Анкерная угловая повышенная без тросов на угол поворота 0—7°, УДС220-1, рис. 4-12,*б*	АСО-300, АСО-400, АСО-500	I—IV	I—V	—	—	—	15,5/—	629/—
(23) То же, но с тросом на угол поворота 0—3°, УДС220-5, рис. 4-12,*б*	АСО-300, АСО-400, АСО-500/С-70	I—IV	I—V	—	—	—	—/16,1	—/864
(24) Анкерная угловая повышенная без тросов на угол поворота 50—60°, УДС220-3, рис. 4-12,*в*	АСО-300, АСО-400, АСО-500	I—IV	I—V	—	—	—	13,3/—	1 120/—
(25) То же, но с тросом на угол поворота 32—41°, УДС220-7, рис. 4-12, *в*	АСО-300, АСО-400, АСО-500/С-70	I—IV	I—V	—	—	—	—/13,9	—/1 353

APPROVED FOR RELEASE: 2007/02/08: CIA-RDP82-00850R000300090014-4

APPROVED FOR RELEASE: 2007/02/08: CIA-RDP82-00850R000300090014-4

Key:

† - Russian C is equivalent to English S
(1) - Type and nomenclature
(2) - Estimated conditions
(3) - Conductor/Cable
(4) - Ice region
(5) - Wind region
(6) - Effective spans, m
(7) - Overall span
(8) - Wind span
(9) - Weight span
(10)- Material expenditure
(11)- Wood, m^3
(12)- Metal, kg
(13)- Without cable/With cable
(14)- Without cable/With cable
(15)- Intermediate single-circuit П-shaped free-standing, PD220-1, fig. 4-11, *a*
(16)- Intermediate single-circuit П-shaped free-standing, but without beams, PD220-3, fig. 4-11, *b*
(17)- Intermediate single-circuit П-shaped lowered free-standing PDS220-1, fig. 4-11, *c*
(18)- Anchor-angle single-circuit without cables, with a 0 to 7° angle of deflection, UD220-1, fig. 4-12, *a*
(19)- Same, but with cable and a 0 to 3° angle of deflection, UD220-5, fig. 4-12, *a*
(20)- Anchor-angle single-circuit without cables, with an angle of deflection up to 50-60°, UD220-3, fig. 4-12, *a*
(21)- Same, but with cables and an angle of deflection of up to 32-41°, UD220-7, fig. 4-12, *a*
(22)- Anchor-angle elevated without cables and with a 0 to 7° angle of deflection, UDS220-1, fig. 4-12,*b*
(23)- Same, but with cable and 0 to 3° angle of deflection, UDS220-5, fig. 4-12, *b*
(24)- Anchor-angle elevated without cables and with a 50 to 60° angle of deflection, UDS220-3, fig. 4-12, *c*
(25)- Same, but with cable and a 32-41° angle of deflection, UDS220-7, fig. 4-12, *c*

Notes:

1. See paras. 1-7, 4-4-3.

2. Towers with cables are made on the basis of towers without cables but with an increase in cable supports and the installation of a cable cross-piece with welded hooks for fixing cables and a metal stay.

3. The use of steel towers (see 4-4-15) is envisioned for dead-end towers.

4. The length of the supporting insulators is taken as equal to 2.0 m.

5. The upper ends of wooden parts are protected with a bitumen paste.

APPROVED FOR RELEASE: 2007/02/08: CIA-RDP82-00850R000300090014-4

APPROVED FOR RELEASE: 2007/02/08: CIA-RDP82-00850R000300090014-4

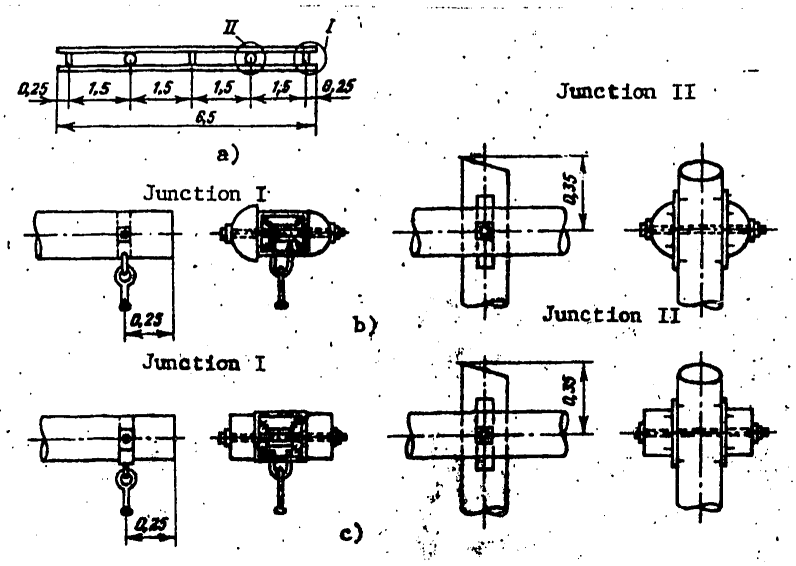

Fig. 4-9. Semifinished-log and Half-rail Crosspieces for 35-kV Towers

a - proposed overall view
b - from semifinished logs
c - from half-rails

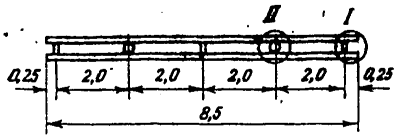

Fig. 4-10. Semifinished-log and Half-rail Cross-pieces for 110-kV Towers
(Same junctions as in fig. 4-9.)

APPROVED FOR RELEASE: 2007/02/08: CIA-RDP82-00850R000300090014-4

APPROVED FOR RELEASE: 2007/02/08: CIA-RDP82-00850R000300090014-4

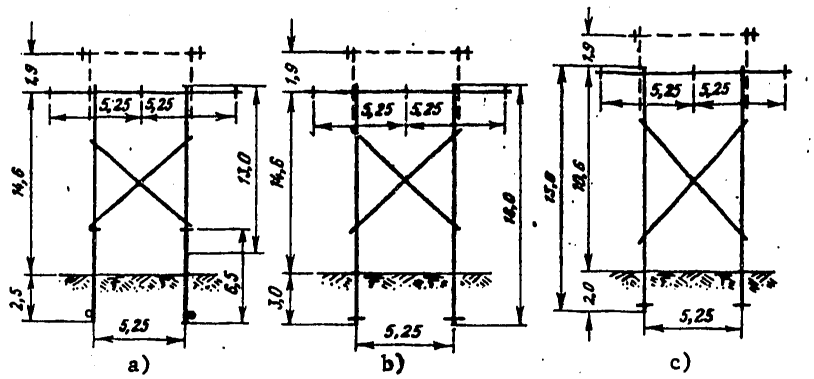

Fig. 4-11. Standardized 220-kV Wooden Intermediate Towers

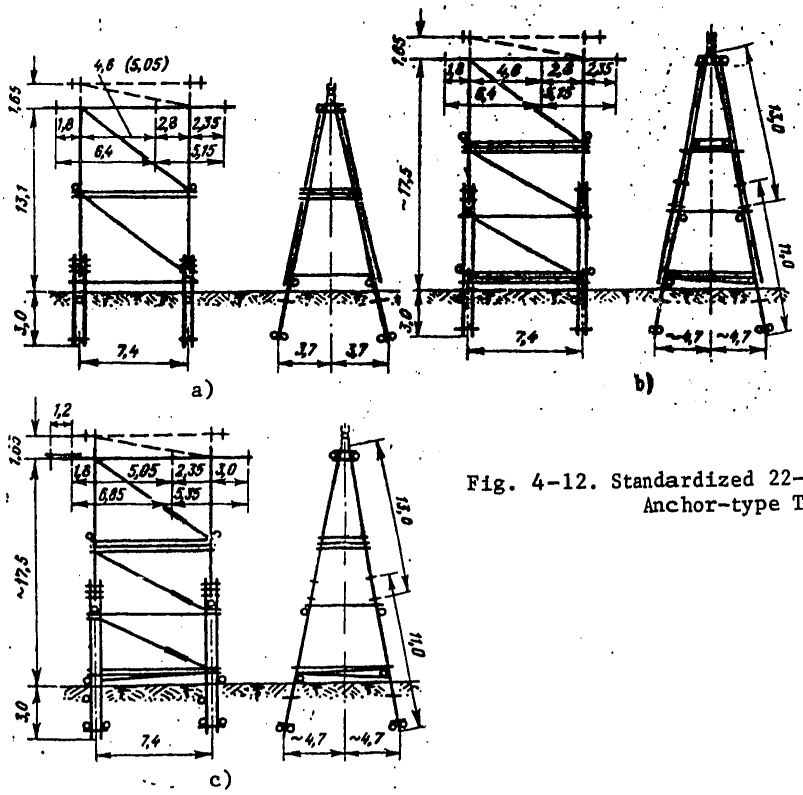

Fig. 4-12. Standardized 22-kV Wooden Anchor-type Towers

APPROVED FOR RELEASE: 2007/02/08: CIA-RDP82-00850R000300090014-4

APPROVED FOR RELEASE: 2007/02/08: CIA-RDP82-00850R000300090014-4

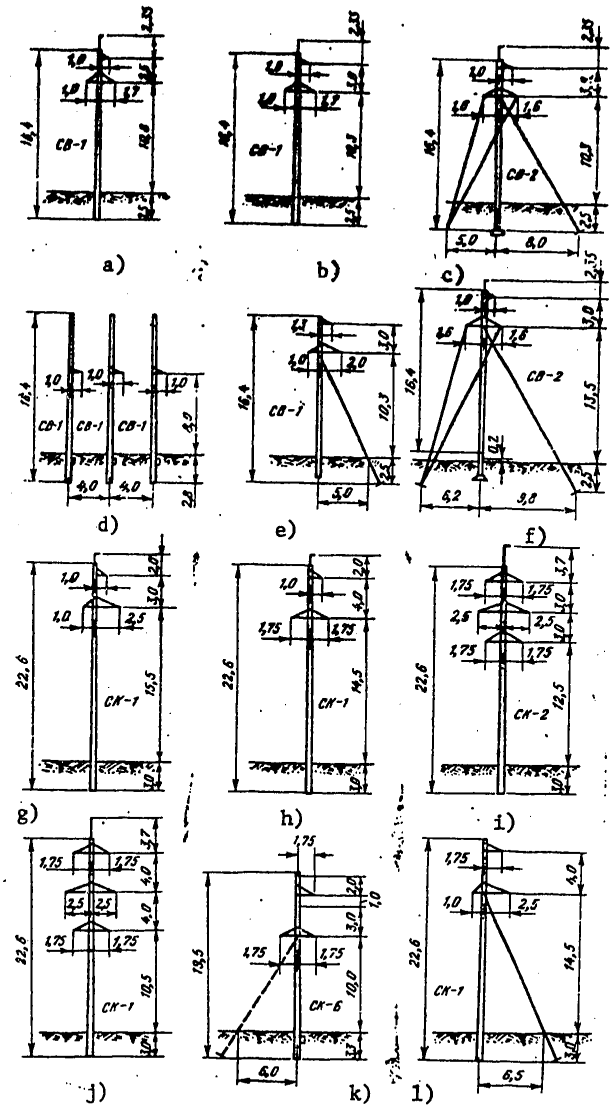

Fig. 4-13. Standardized 35-kV Reinforced-concrete Towers

APPROVED FOR RELEASE: 2007/02/08: CIA-RDP82-00850R000300090014-4

APPROVED FOR RELEASE: 2007/02/08: CIA-RDP82-00850R000300090014-4

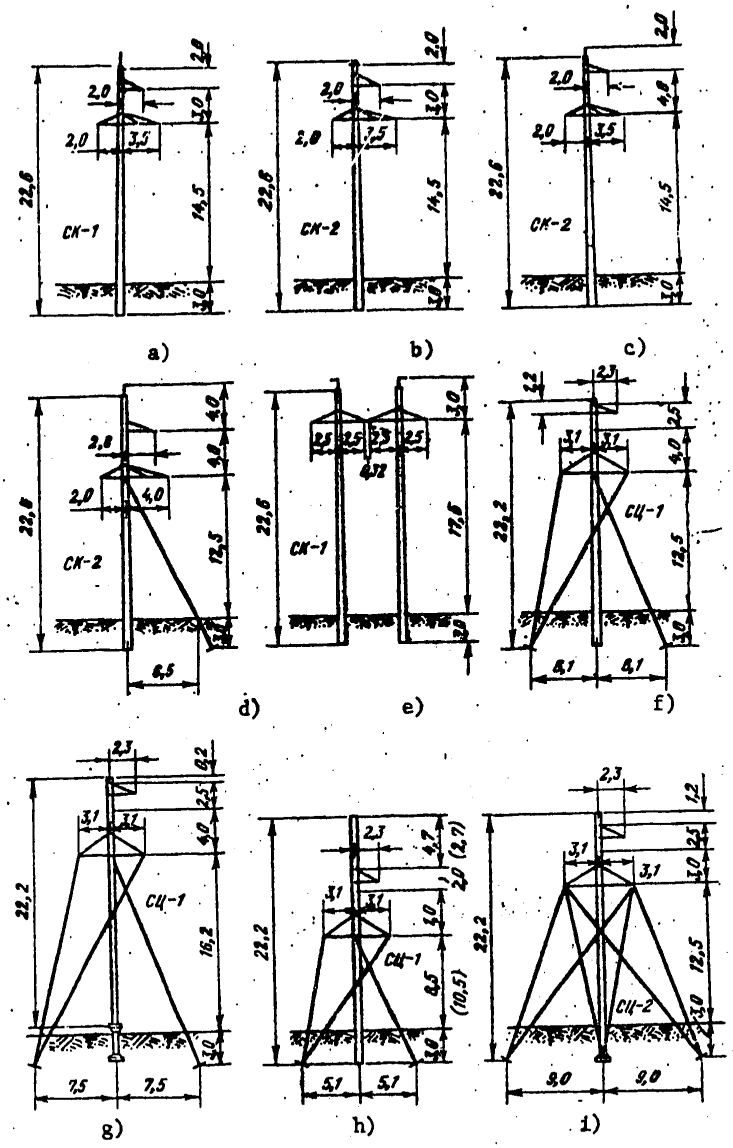

Fig. 4-14. Standardized 110-kV Reinforced-concrete Towers

APPROVED FOR RELEASE: 2007/02/08: CIA-RDP82-00850R000300090014-4

APPROVED FOR RELEASE: 2007/02/08: CIA-RDP82-00850R000300090014-4

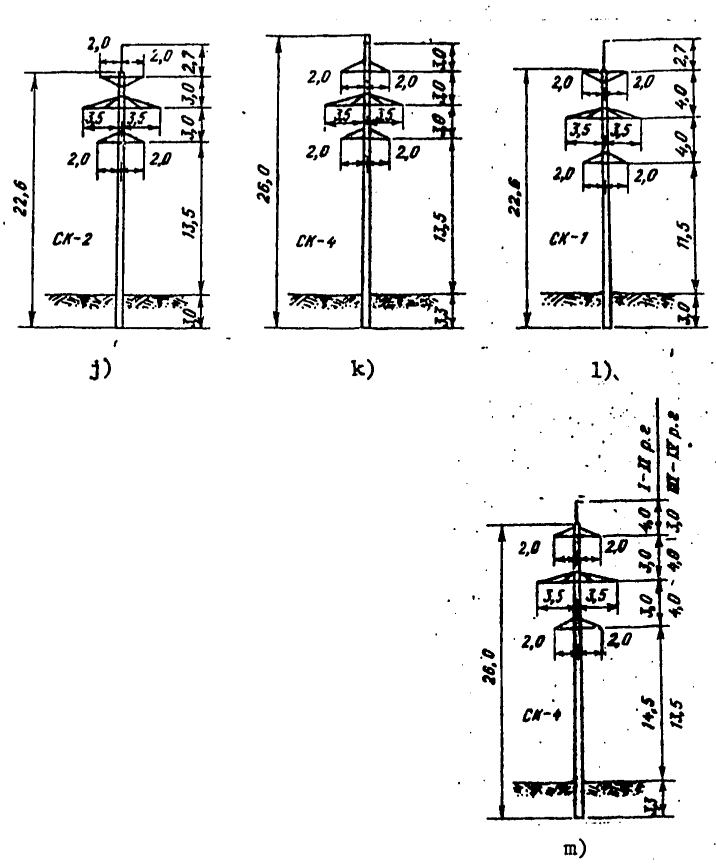

Fig. 4-14. Standardized 110-kV Reinforced-concrete Towers

APPROVED FOR RELEASE: 2007/02/08: CIA-RDP82-00850R000300090014-4

APPROVED FOR RELEASE: 2007/02/08: CIA-RDP82-00850R000300090014-4

6. The deflection angles for anchor-angle towers are cited for wind region III and for the overall spans of the corresponding wooden intermediate towers without cables. For other conditions, the allowable deflection angles are determined for a specific design through calculation.

7. The allowable deflection angles for the UD220-3 and UDS220-3 towers are:

Type of conductor	ASO-300				ASO-400				ASO-500			
Ice regions	I	II	III	IV	I	II	III	IV	I	II	III	IV
Deflection angles	60°	55°	50°	50°	60°	50°	50°	50°	50°	50°	50°	50°

Allowable deflection angles for UD220-7 and UDS220-7 towers:

Type of conductor	ASO-300				ASO-400				ASO-500			
Ice regions	I	II	III	IV	I	II	III	IV	I	II	III	IV
Deflection angles	41°	35°	32°	32°	38°	33°	32°	32°	38°	33°	32°	32°

8. A difference in stress of 800 kg is allowable for the conductors on anchor-angle towers (normal loads).

9. For deflection angles of 15-60° on UD220-3 and UDS220-7 towers, a supporting insulator is required on the cross-piece on the side of the exterior angle for the stub stay. For deflection angles of 7 to 30°, the supporting insulator is hung on the side of the interior angle.

4-4-7. Standardized 35-kV Reinforced-concrete Towers

(1) Тип и условное обозначение	(2) Расчетные условия			(6) Расчетные пролеты, м			(10) Расход материалов, бетон, м³ / сталь, кг	(11) Масса, т
	(3) Провод	(4) Район гололедности	(5) Угол поворота, град	(7) габаритный	(8) ветровой	(9) весовой		
	(12) *На вибрированных стойках*							
(13) Промежуточная одноцепная свободностоящая, ПБ35-1в, рис. 4-13,*а*	АС-70 †	I	—	195	275	245	1,42 / 72	3,62
		II		165	230	205		
	АС-95	I		200	280	250		
		II		180	250	225		
	АС-150	I		210	295	260		
		II		210	295	260		

APPROVED FOR RELEASE: 2007/02/08: CIA-RDP82-00850R000300090014-4

APPROVED FOR RELEASE: 2007/02/08: CIA-RDP82-00850R000300090014-4

4-4-7. Continuation

(1) Тип и условное обозначение	(2) Расчетные условия (3) Провод	(4) Район гололедности	(5) Угол поворота, *град*	(6) Расчетные пролеты, *м* (7) Габаритный	(8) ветровой	(9) весовой	(10) Расход материалов, бетон, $м^3$ / сталь, *кг*	(11) Масса, *т*
(14) То же, ПБ35-3в, рис. 4-13,*б*	АС-70	III		125	175	155		
		IV		105	145	130		
	АС-95	III	—	140	195	175	1,42 / 72	3,62
		IV		115	160	145		
	АС-150	III		170	220	210		
		IV		150	180	190		
(15) Анкерная угловая одноцепная, на оттяжках на угол 60°, УБ35-1в, рис. 4-13,*в*	АС-70	I	60	—	195	290		
		II	60	—	165	250		
		III	60	—	125	190		
		IV	60	—	105	160		
	АС-95	I	60	—	200	300		
		II	60	—	180	270	1,42 / 508	4,06
		III	60	—	140	210		
		IV	60	—	115	170		
	АС-150	I	60	—	210	315		
		II	60	—	210	315		
		III	55	—	170	225		
		IV	55	—	150	225		
(16) То же трехстоечная свободностоящая на угол 60°, УБ35-3В, рис. 4-13,*г*	АС-70	I		—	195	290		
		II	60	—	165	250	4,26 / 81	10,73
		III		—	125	190		
		IV		—	105	160		
(17) Промежуточная угловая одноцепная с оттяжкой, ПУСБ35-1В, рис. 4-13,*д*	АС-70	I	18	—	175	220		
		II	18	—	155	195		
		III	15	—	125	155		
		IV	15	—	105	130		
	АС-95	I	12	—	180	225		
		II	12	—	170	210	1,42 / 131	3,68
		III	10	—	140	175		
		IV	10	—	115	145		
	АС-150	I	6	—	190	240		
		II	6	—	190	240		
		III	4	—	170	210		
		IV	4	—	150	190		
(18) Анкерная угловая одноцепная на оттяжках повышенная на угол 60°, УСБ35-1В, рис. 4-13,*е*	АС-70†	I	60	—	195	290		
		II	60	—	165	250		
		III	60	—	125	190		
		IV	60	—	105	160		
	АС-95	I	60	—	200	300		
		II	60	—	180	270	1,42 / 573	4,12
		III	60	—	140	210		
		IV	60	—	115	170		
	АС-150	I	60	—	210	315		
		II	60	—	210	315		
		III	55	—	170	255		
		IV	55	—	150	255		
(19) *На центрифугированных стойках*								
(20) Промежуточная одноцепная свободностоящая, ПБ35-1, рис. 4-13,*ж*	АС-95	I	—	325	455	405		
		II		265	370	330	1,67 / 123	4,78
	АС-150	I		340	400	425		
		II		315	400	400		
(21) То же, ПБ35-3, рис. 4-13,*з*	АС-95	III	—	205	330	255		
		IV		175	280	220	1,67 / 118	4,77
	АС-150	III		255	355	320		
		IV		215	270	270		

APPROVED FOR RELEASE: 2007/02/08: CIA-RDP82-00850R000300090014-4

APPROVED FOR RELEASE: 2007/02/08: CIA-RDP82-00850R000300090014-4

4-4-7. Continuation

(22)	Промежуточная двухцепная свободностоящая, ПБ35-2, рис. 4-13,*и*	АС-95	I	—	255	340	320	1,8/299	5,37
			II		215	340	270		
		АС-150	I		265	265	330		
			II		255	265	320		
(23)	То же, ПБ35-4, рис. 4-13,*к*	АС-95	III	—	145	205	180	1,67/299	4,91
			IV		120	170	150		
		АС-150	III		175	200	220		
			IV		150	160	190		
(24)	Анкерная угловая одноцепная с оттяжкой на угол 60°, УБ35-1, рис. 4-13,*л*	АС-95	I	60	—	325	490	2,18/270	6,6
			II		—	265	400		
			III		—	205	310		
			IV		—	175	260		
		АС-150	I		—	340	510		
			II		—	315	475		
			III		—	255	380		
			IV		—	215	320		
(25)	Промежуточная угловая одноцепная с оттяжкой, ПУСБ35-1, рис. 4-13,*м*	АС-95	I	35	300	300	375	1,67/211	4,77
			II	35	250	250	310		
			III	31	205	205	255		
			IV	31	175	175	220		
		АС-150	I	18	320	320	400		
			II	18	295	295	370		
			III	15	255	255	320		
			IV	15	215	215	270		

Key:

† - Russian C is equivalent to English S
(1) - Type and nomenclature
(2) - Estimated conditions
(3) - Conductor
(4) - Ice area
(5) - Angle of deflection, °
(6) - Effective spans, m
(7) - Overall span
(8) - Wind span
(9) - Weight span
(10)- Material expenditure, concrete, m^3/steel, kg
(11)- Mass, t
(12)- On vibration-cast supports
(13)- Intermediate single-circuit free-standing, PB35-1v, fig. 4-13, *a*
(14)- Same, PB35-3v, fig. 4-13, *b*
(15)- Anchor-angle single-circuit on guys with a deflection angle of 60°, UB35-1v, fig. 4-13, *c*
(16)- Same, three-support free-standing with a deflection angle of 60°, UB35-3v, fig. 4-13, *d*
(17)- Angle-suspension single-circuit with guy, PUSB35-1v, fig. 4-13, *e*
(18)- Anchor-angle single-circuit on guys, elevated, with a deflection angle of 60°, USB35-1v, fig. 4-13, *f*
(19)- On centrifugally-cast supports
(20)- Intermediate single-circuit free-standing, PB35-1, fig. 4-13, *g*
(21)- Same, PB35-3, fig. 4-13, *h*

APPROVED FOR RELEASE: 2007/02/08: CIA-RDP82-00850R000300090014-4

APPROVED FOR RELEASE: 2007/02/08: CIA-RDP82-00850R000300090014-4

(22)- Intermediate two-circuit free-standing, PB35-2, fig.4-13, *i*
(23)- Same, PB35-4, fig. 4-13, *j*
(24)- Anchor-angle single-circuit with guy and a deflection angle of 60°, UB35-1, fig. 4-13, *k*
(25)- Angle-suspension single-circuit with guy, PUSB35-1, fig. 4-13, *l*

Notes:

1. Towers were developed by the North-West Branch of Energoset'proyekt in 1970 for wind region III.

2. The S-35 cable can be supported on all towers except for the UB35-3v. For this it is necessary to install cable supports, ordered and delivered separately.

3. Anchor-angle towers can be used for dead-end towers.

4. Wind spans for towers with a cable must be reduced in accordance with instructions for tower-installation arrangements.

5. All supports are delivered with welded external grounding rods.

6. The maximum deflection angle for the USB35-1v and UB35-1v towers with cable and AS-150 conductor is 40°.

7. For PUSB35-1v towers installed without guys, the deflection angle can be reduced to 0-10°, depending upon the type of conductor and the ice region. In this case, it is necessary to install one stayblock on the ground surface.

8. When supporting the AS-95 conductor on PB35-2 towers, it is permissible to install SK-1 supports instead of the SK-2. In this case, the wind spans must not exceed the overall spans.

9. The UB35-1 tower can be installed without a guy line. In this case, the angle of deflection must be limited to 25-55° for towers without a cable and to 18-33° for towers with a cable, depending upon the type of conductor and the ice region.

10. The PUSB35-1 tower can be installed without a guy. In this case, the angle of deflection must be limited to 0-7°, depending upon the type of conductor and the ice region. Moreover, it is necessary to install one stayback on the ground surface.

11. In regions with frequent and intense conductor shake, the PUSB35-1 and PB35-3 towers are installed with reduced spans equal to 0.8 times the overall span.

APPROVED FOR RELEASE: 2007/02/08: CIA-RDP82-00850R000300090014-4

APPROVED FOR RELEASE: 2007/02/08: CIA-RDP82-00850R000300090014-4

4-4-8. Standardized 110-kV Reinforced-concrete Towers

(1) Тип и условное обозначение	(2) Расчетные условия		(3) Расчетные пролеты, м			(9) Расход материалов, бетон, м³ / металл, кг	(10) Масса, т
	(4) Провод / Трос	(5) Район гололедности	(6) габаритный	(7) ветровой	(8) весовой		
(11) Промежуточная одноцепная свободностоящая, ПБ110-1, рис. 4-14, *а*	АС-70 † / С-50	I	275	300	345	1,67 / 216	4,82
		II	215	300	270		
	АС-95 / С-50	I	285	335	355		
		II	240	335	300		
	АС-120 / С-50	I	300	350	375		
		II	270	350	340		
	АС-150 / С-50	I	300	325	375		
		II	285	325	355		
(12) То же, ПБ110-3, рис. 4-14, *б*	АС-120 / С-50	I	300	380	375	1,81 / 216	5,24
		II	270	380	340		
	АС-150 / С-50	I	300	390	375		
		II	285	390	355		
	АС-185 / С-50	I	305	350	380		
		II	295	350	370		
	АСО-240 / С-50	I	295	335	370		
		II	285	335	370		
(13) То же, ПБ110-5, рис. 4-14, *в*	АС-70 / С-50	III	175	245	220	1,81 / 255	5,28
		IV	145	205	180		
	АС-95 / С-50	III	195	275	250		
		IV	165	230	200		
	АС-120 / С-50	III	225	305	280		
		IV	190	235	240		
	АС-150 / С-50	III	240	280	300		
		IV	210	225	260		
	АС-185 / С-50	III	305	350	380		
		IV	295	350	370		
	АС-240 / С-50	III	295	335	370		
		IV	295	335	370		
(14) Промежуточная угловая одноцепная с оттяжкой на угол поворота до 8°, ПУСБ110-1, рис. 4-14 *г*	АС-70 / С-50	I	230	230	290	1,81 / 414	5,50
		II	180	180	225		
		III	145	145	180		
		IV	120	120	150		
	АС-95 / С-50	I	230	230	290		
		II	200	200	250		
		III	160	160	200		
		IV	140	140	175		
	АС-120 / С-50	I	240	240	300		
		II	225	225	280		
		III	185	185	230		
		IV	160	160	200		

APPROVED FOR RELEASE: 2007/02/08: CIA-RDP82-00850R000300090014-4

APPROVED FOR RELEASE: 2007/02/08: CIA-RDP82-00850R000300090014-4

4-4-8. Continuation

(1) Тип и условное обозначение	(2) Расчетные условия		(3) Расчетные пролеты, м			(9) Расход материалов, бетон, м³ / металл, кг	(10) Масса, т
	(4) Провод / Трос	(5) Район гололедности	(6) габаритный	(7) ветровой	(8) весовой		
(15) Промежуточная угловая одноцепная с оттяжкой на угол поворота до 8°, ПУСБ110-1, рис. 4-14, г	АС-150 / С-50	I	240	240	300	1,81 / 414	5,50
		II	235	235	295		
		III	200	200	250		
		IV	175	175	220		
	АС-185 / С-50	I	240	240	300		
		II	240	240	300		
		III	210	210	260		
		IV	185	185	230		
	АСО-240 / С-50	I	235	235	290		
		II	235	235	280		
		III	215	215	270		
		IV	195	195	245		
(16) Промежуточная портальная одноцепная свободностоящая, ПСБ150-1, рис. 4-14, д	АС-70 / С-50	I	330	460	410	—	8,63
		II	260	365	325		
		III	210	295	200		
		IV	175	245	220		
	АС-95 / С-50	I	345	485	430	3,34 / 360	
		II	285	400	355		
		III	235	330	295		
		IV	195	270	245		
	АС-120 / С-50	I	370	515	460		
		II	320	445	400		
		III	265	370	340		
		VI	230	300	290		
	АС-150 / С-50	I	370	520	460		
		II	340	475	425		
		III	285	355	355		
		IV	245	285	305		
	АС-185 / С-50	I	370	520	460		
		II	355	495	445		
		III	300	345	375		
		IV	260	290	325		
	АСО-240 / С-50	I	365	460	455		
		II	355	460	445		
		III	310	330	385		
		IV	275	265	340		
(17) Анкерная угловая одноцепная на оттяжках на угол поворота до 60°, УБ110-1, рис. 4-14, е	АС-70—АСО-240 / С-50	I—IV	—	До 500	До 750	2,1 / 1 586	7,40
(18) То же, но повышенная на 3,7 м, УСБ110-1, рис. 4-14, ж	АС-70—АСО-240 / С-50	I—IV	—	До 500	До 750	2,1 / 1 789	7,50
(19) То же, но пониженная на 2 м, УСБ110-3, рис. 4-14, з	АС-70—АСО-240 / С-50	I—IV	—	До 500	До 750	2,1 / 1 551	7,95

APPROVED FOR RELEASE: 2007/02/08: CIA-RDP82-00850R000300090014-4

APPROVED FOR RELEASE: 2007/02/08: CIA-RDP82-00850R000300090014-4

4-4-8. Continuation

(1) Тип и условное обозначение	(2) Расчетные условия		(3) Расчетные пролеты, м			(9) Расход материалов, бетон, м³ / металл, кг	(10) Масса, т
	(4) Провод / Трос	(5) Район гололедности	(6) габаритный	(7) ветровой	(8) весовой		
(20) Анкерная угловая одноцепная на оттяжках на угол поворота до 60° но пониженная на 4 м, УСБ110-5, рис. 4-14, з	АС-70—АСО-240 / С-50	I—IV	—	До 500	До 750	2,1 / 1 521	7,82
(21) Концевая одноцепная на оттяжках на угол поворота до 60°, КСБ110-1, рис. 4-14, и	АС-70—АСО-240 / С-50	I—IV	—	До 500	До 750	2,1 / 1 967	7,80
(22) Промежуточная двухцепная, свободностоящая, ПБ110-2, рис. 4-14, к	АС-70 / С-50	I II	250 200	280 280	310 250	1,81 / 522	5,5
	АС-95 / С-50	I II	260 220	245 245	325 275		
	АС-120 / С-50	I II	275 250	220 220	275 275		
(23) То же, ПБ110-4, рис. 4-14, л	АС-120 / С-50	I II	275 250	335 335	345 315	2,52 / 422	7,4
	АС-150 / С-50	I II	275 260	305 305	345 330		
	АС-185 / С-50	I II	275 275	285 285	345 345		
	АСО-240 / С-50	I II	275 275	275 275	330 330		
(24) То же, ПБ110-6, рис. 4-14, м	АС-70 / С-50	III IV	135 110	185 145	170 135	1,67 / 522	5,1
	АС-95 / С-50	III IV	150 125	175 140	185 155		
	АС-120 / С-50	III IV	170 145	160 130	210 180		
(25) То же, ПБ110-8, рис. 4-14, н	АС-120 / С-50	III IV	210 180	260 210	260 225	2,52 / 484	7,5
	АС-150 / С-50	III IV	225 190	250 205	280 240		
	АС-185 / С-50	III IV	235 205	240 200	295 255		
	АСО-240 / С-50	III IV	240 215	235 195	295 245		

APPROVED FOR RELEASE: 2007/02/08: CIA-RDP82-00850R000300090014-4

APPROVED FOR RELEASE: 2007/02/08: CIA-RDP82-00850R000300090014-4

Key:

† - Russian C is equivalent to English S
(1) - Type and nomenclature
(2) - Estimated conditions
(3) - Effective spans
(4) - Conductor/Cable
(5) - Ice area
(6) - Overall span
(7) - Wind span
(8) - Weight span
(9) - Material expenditure, concrete, m^3/metal, kg
(10)- Mass, t
(11)- Intermediate single-circuit free-standing, PB110-1, fig. 4-14, *a*
(12)- Same, PB110-3, fig. 4-14, *b*
(13)- Same, PB110-5, fig. 4-14, *c*
(14)- Angle-suspension single-circuit with guy and deflection angle up to 8°, PUSB110-1, fig. 4-14, *d*
(15)- Angle-suspension single-circuit with guy and deflection angle up to 8°, PUSB110-1, fig. 4-14, *d*
(16)- Intermediate straddle single-circuit free-standing PSB150-1, fig. 4-14, *e*
(17)- Anchor-angle single-circuit on guys with a deflection angle of up to 60°, UB110-1, fig. 4-14, *f*
(18)- Same, but elevated 3.7 m, USB110-1, fig. 4-14, *g*
(19)- Same, but lowered by 2 m, USB110-3, fig. 4-14, *h*
(20)- Anchor-angle single-circuit on guys with a deflection angle of up to 60° but lowered by 4 m, USB110-5, fig. 4-14, *h*
(21)- Dead-end single-circuit on guys with a deflection angle of up to 60°, KSB110-1, fig. 4-14, *i*
(22)- Intermediate two-circuit free-standing, PB110-2, fig. 4-14, *j*
(23)- Same, PB110-4, fig. 4-14, *k*
(24)- Same, PB110-6, fig. 4-14, *l*
(25)- Same, PB110-8, fig. 4-14, *m*

Notes:

1. Towers developed by the North-West Branch of Energoset'proyekt in 1969 for wind regions I-III.

2. Length of the supporting insulator is taken to be 1.3 m.

3. The effective overall spans for anchor-angle towers are usually the same as for the corresponding intermediate towers. The maximum values for the wind and weight spans for these towers are indicated in the installation diagrams, depending upon the type of conductor and the ice region.

4. The maximum angle of deflection on PUSB110-1 and PUSB110-3 towers for ASO-240 conductors in ice region IV is 6°.

5. The PUSB110-1 tower can be installed without guys with the following values for the deflection angles:

APPROVED FOR RELEASE: 2007/02/08: CIA-RDP82-00850R000300090014-4

APPROVED FOR RELEASE: 2007/02/08: CIA-RDP82-00850R000300090014-4

Type of Conductor	Ice area			
	I	II	III	IV
AS-70	8°	8°	8°	8°
AS-95	8°	8°	6°	5°
AS-120	4°	4°	3°	2°
AS-150	4°	4°	2°	1°
AS-185	3°	3°	1°	0°
ASO-240	2°	2°	0°	0°

4-4-9. Standardized 150-kV Reinforced-concrete Towers

(1) Тип и условное обозначение	(2) Расчетные условия		(5) Расчетные пролеты, м			(9) Расход материалов		(12) Масса, т
	(3) Провод	(4) Район гололедности	(6) вертикальный	(7) ветровой	(8) весовой	(10) металл, т	(11) бетона, м³	
(13) Промежуточная одноцепная свободностоящая, ПБ150-1, рис. 4-15, *а*	АС-120 †	I	250	320	310	0,32	1,81	5,32
		II	230	320	285			
		III	190	265	235			
		IV	165	230	205			
	АС-150	I	250	345	310			
		II	245	345	305			
		III	205	285	255			
		IV	180	230	275			
(14) Промежуточная одноцепная свободностоящая, ПБ150-1, рис. 4-15, *а*	АС-185	I	250	350	310	0,32	1,81	5,32
		II	250	320	310			
		III	215	280	270			
		IV	190	220	235			
	АСО-240	I	245	335	305			
		II	245	335	305			
		III	225	260	280			
		IV	200	205	250			
(15) Промежуточная двухцепная свободностоящая, ПБ150-2, рис. 4-15, *б*	АС-120	I	250	325	310	0,6	2,52	7,6
		II	235	325	295			
		III	190	260	240			
		IV	165	210	205			
	АС-150	I	250	250	310			
		II	245	280	305			
		III	205	250	255			
		IV	180	205	225			

APPROVED FOR RELEASE: 2007/02/08: CIA-RDP82-00850R000300090014-4

APPROVED FOR RELEASE: 2007/02/08: CIA-RDP82-00850R000300090014-4

4-4-9. Continuation

(1) Тип и условное обозначение	(2) Расчетные условия		(5) Расчетные пролеты, м			(9) Расход материалов		(12) Масса, т
	(3) Провод	(4) Район гололедности	(6) Коэффициентный	(7) ветровой	(8) весовой	(10) металл, т	(11) бетон, м³	
	АС-185	I	250	255	310			
		II	250	255	310			
		III	215	240	270			
		IV	192	200	235			
	АСО-240	I	245	250	305			
		II	245	250	305			
		III	225	235	280			
		IV	200	195	245			
(16) Промежуточная одноцепная свободностоящая портальная, ПСБ150-1, рис. 4-14, д	АС-120	I	350	490	435			
		II	305	425	380			
		III	255	355	320			
		IV	214	300	270			
	АС-150	I	350	490	435			
		II	325	435	405			
		III	275	355	345	0,36	3,31	8,63
		IV	235	285	295			
	АС-185	I	350	490	435			
		II	335	470	420			
		III	285	345	355			
		IV	250	270	310			
(17) Промежуточная одноцепная свободностоящая портальная, ПСБ150-1, рис. 4-14, д	АСО-240	I	345	460	430			
		II	340	460	425	0,36	3,34	8,63
		III	295	330	370			
		IV	260	265	325			

Key:
† - Russian C is equivalent to English S
(1) - Type and Nomenclature
(2) - Estimated conditions
(3) - Conductor
(4) - Ice area
(5) - Effective spans, m
(6) - Overall span
(7) - Wind span
(8) - Weight span

APPROVED FOR RELEASE: 2007/02/08: CIA-RDP82-00850R000300090014-4

APPROVED FOR RELEASE: 2007/02/08: CIA-RDP82-00850R000300090014-4

(9) - Material expenditure
(10)- Metal, t
(11)- Concrete, m^3
(12)- Mass, t
(13)- Intermediate single-circuit free-standing, PB150-1, fig. 4-15, *a*
(14)- Intermediate single-circuit free-standing, PB150-1, fig. 4-15, *a*
(15)- Intermediate two-circuit free-standing, PB150-2, fig. 4-15, *b*
(16)- Intermediate single-circuit free-standing straddle, PSB150-1, fig. 4-14, *e*
(17)- Intermediate single-circuit free-standing straddle, PSB150-1, fig. 4-14, *e*

Notes:

1. Towers developed by the North-West Branch of Energoset'proyekt in 1969 for wind region III and for suspending the S-50 cable.

2. Length of supporting insulator is 1.7 m.

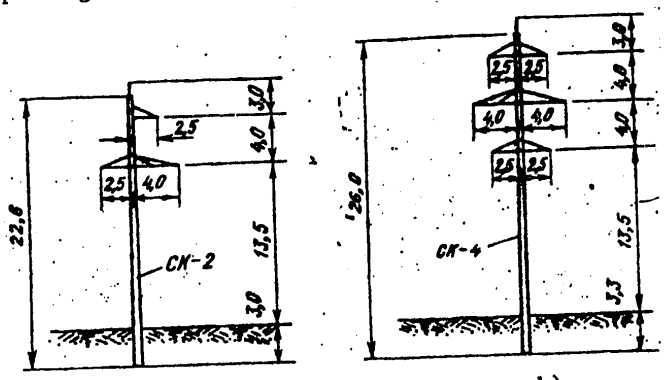

a) b)

Fig. 4-15. Standardized 150-kV Reinforced-concrete Towers

4-4-10. Standardized 220 and 330-kV Reinforced-concrete Towers

(1) Тип и условное обозначение	(2) Расчетные условия		(3) Расчетные пролеты, м			(9) Расход материалов, бетон, м³ / металл, кг	(10) Масса, т
	(4) Провод / Трос	(5) Район гололедности	(6) Габаритный	(7) Ветровой	(8) Весовой		
(11) Промежуточная одноцепная свободностоящая портальная для ВЛ 330 кв, ПБ330-1, рис, 4-16, *a*	2×АСО-300† / С-70	I II III IV	335 335 295 265	360 360 340 305	420 420 370 330	5;04 / 1 118	15,02
	2×АСО-400 / С-70	I II III IV	335 335 300 285	335 335 320 295	420 420 375 355		

APPROVED FOR RELEASE: 2007/02/08: CIA-RDP82-00850R000300090014-4

APPROVED FOR RELEASE: 2007/02/08: CIA-RDP82-00850R000300090014-4

4-4-10. Continuation

(1) Тип и условное обозначение	(2) Расчетные условия		(3) Расчетные пролеты, м			(9) Расход материалов, бетон, м³ / металл, кг	(10) Масса, т
	(4) Провод / Трос	(5) Район гололедности	(6) Габаритный	(7) Ветровой	(8) Весовой		
(12) Промежуточная одноцепная свободностоящая портальная для ВЛ 220 кв, ПСБ220-1, рис. 4-16, б	АСО-300 / С-70	I	320	445	400	3,62 / 429	10,57
		II	320	445	400		
		III	285	375	355		
		IV	255	295	320		
	АСО-400 / С-70	I	320	445	400		
		II	320	445	400		
		III	305	345	380		
		IV	275	275	345		
(13) Промежуточная одноцепная свободностоящая для ВЛ 220 кв, ПБ220-1, рис. 4-16, в	АСО-300 / С-70	I	290	360	360	2,52 / 447	6,45
		II	290	360	360		
		III	260	280	325		
		IV	230	230	285		
	АСО-400 / С-70	I	290	315	360		
		II	290	315	260		
		III	280	270	340		
		IV	220	225	275		

Key:
† - Russian C is equivalent to English S
(1) - Type and nomenclature
(2) - Estimated conditions
(3) - Effective spans, m
(4) - Conductor/Cable
(5) - Ice region
(6) - Overall span
(7) - Wind span
(8) - Weight span
(9) - Material expenditure, concrete, m^3/metal, kg
(10)- Mass, t
(11)- Intermediate single-circuit free-standing straddle for 330-kV overhead lines, PB330-1, fig. 4-16, *a*
(12)- Intermediate single-circuit free-standing straddle for 220-kV overhead lines, PSB220-1, fig. 4-16, *b*
(13)- Intermediate single-circuit free-standing for 220-kV overhead lines, PB220-1, fig. 4-16, *c*

Notes:

1. Towers developed by the North-West Branch of Energoset'proyekt in 1969 for wind regions I-III.

APPROVED FOR RELEASE: 2007/02/08: CIA-RDP82-00850R000300090014-4

APPROVED FOR RELEASE: 2007/02/08: CIA-RDP82-00850R000300090014-4

2. Length of supporting insulator is 3.4 m for 330-kV towers, 2.4 m for 220-kV towers.

3. When using PB220-1 towers in ice region IV with ASO-400 conductors, the height of the lower cross-piece over the ground is 14.5 m. It is 16.0 m in all other cases.

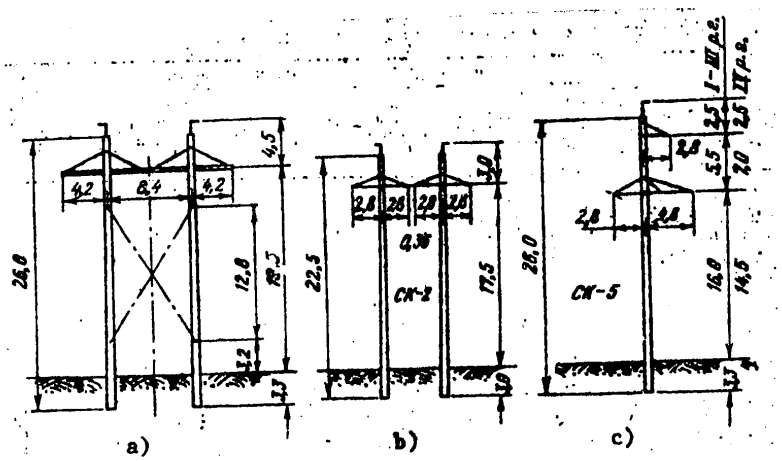

Fig. 4-16. Standardized 220 and 330-kV Reinforced-concrete Towers

4-4-11. Standardized 500-kV Reinforced-concrete Towers

(1) Тип и условное обозначение	(2) Расчетные условия			(3) Расчетные пролеты, м			(10) Расход материалов, бетон, м³ / металл, т
	(4) Провод	(5) Район гололедности	(6) Район по ветру	(7) Габаритный	(8) Ветровой	(9) Весовой	
(11) Промежуточная одноцепная на оттяжках, ПБ500-1, рис. 4-17, *а*	3×АСО-330 +	II	III	380	380	475	
		III		340	340	425	
		IV		300	300	375	
		II	IV-V	370	370	460	
		III		330	330	410	
		IV		290	290	360	
	3×АСО-400	II	III	385	385	480	
		III		350	350	435	
		IV		315	315	395	5,13 / 2,58
		II	IV-V	380	380	475	
		III		345	345	425	
		IV		310	310	385	

APPROVED FOR RELEASE: 2007/02/08: CIA-RDP82-00850R000300090014-4

APPROVED FOR RELEASE: 2007/02/08: CIA-RDP82-00850R000300090014-4

4-4-11. Continuation

(1) Тип и условное обозначение	(2) Расчетные условия			(3) Расчетные пролеты, м			(10) Расход материалов бетон, м³ / металл, т
	(4) Провод	(5) Район гололедности	(6) Район по ветру	(7) Габаритный	(8) Ветровой	(9) Весовой	
	3×АСО-500	II	III	355	355	435	
		III		325	325	405	
		IV		295	295	370	
		II	IV-V	350	350	435	
		III		320	320	400	
		IV		290	290	360	
(12) Анкерная угловая трехстоечная на оттяжках на угол поворота до 60°, УБ500-1, рис. 4-17, б	3×АСО-330	II	II	450	450	570	
		III		400	400	510	
		IV		355	355	450	
		II	IV-V	440	440	555	
		III		390	390	495	
		IV		345	345	435	7,8 / 8,52
	3×АСО-400	II	III	460	460	580	
		III		410	410	525	
		IV		370	370	470	
		II	IV-V	450	450	570	
		III		405	405	515	
		IV		365	365	465	
(13) Анкерная угловая трехстоечная на оттяжках на угол поворота до 60°, УБ500-1, рис. 4-17, б	3×АСО-500	II	III	425	425	530	
		III		385	385	485	
		IV		350	350	445	10,75 / 7,75
		II	IV—V	420	420	525	
		III		380	380	480	
		IV		345	345	435	

Key:
† - Russian C is equivalent to English S
(1) - Type and nomenclature
(2) - Estimated conditions
(3) - Effective spans, m
(4) - Conductor
(5) - Ice region
(6) - Wind region
(7) - Overall span
(8) - Wind span
(9) - Weight span
(10)- Material expenditure, concrete, m^3/metal, t
(11)- Intermediate single-circuit on guys, PB500-1, fig. 4-17, *a*

APPROVED FOR RELEASE: 2007/02/08: CIA-RDP82-00850R000300090014-4

APPROVED FOR RELEASE: 2007/02/08: CIA-RDP82-00850R000300090014-4

(12)- Anchor-angle three-support on guys with a deflection angle of up to 60°, UB500-1, fig. 4-17, *b*
(13)- Anchor-angle three-support on guys with a deflection angle of up to 60°, UB500-1, fig. 4-17, *b*

Notes:

1. Towers designed by the Energoset'proyekt ODP [expansion not provided] in 1970.

2. Towers designed to support two S-70 cables.

3. Length of supporting insulator is 4.5 m.

4. For wind regions IV-V the velocity head is taken to be 80 kgs/m^2 or 36 m/s.

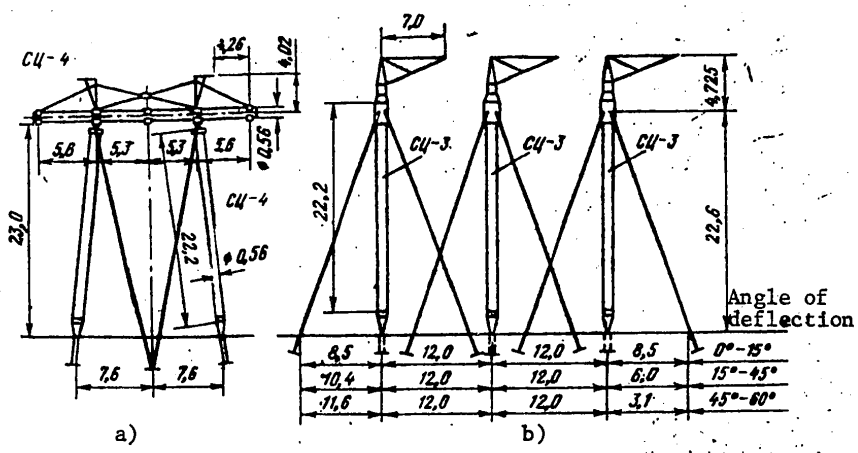

Fig. 4-17. Standardized 500-kV Reinforced-concrete Towers

4-4-12. Standardized 35-kV Steel Towers

(1) Тип и условное обозначение	(2) Расчетные условия		(3) Расчетные пролеты, м			(9) Масса, т
	(3) Провод	(4) Район гололедности	(6) Габаритный	(7) Ветровой	(8) Весовой	
(10) Промежуточная одноцепная свободностоящая, П35-1 (рис. 4-18, *a*)	АС-70 †	I	295	295	370	1,53
		II	235	295	295	
		III	180	295	225	
		IV	145	295	180	
	АС-95	I	310	310	390	
		II	255	310	320	
		III	195	310	245	
		IV	165	310	205	

APPROVED FOR RELEASE: 2007/02/08: CIA-RDP82-00850R000300090014-4

APPROVED FOR RELEASE: 2007/02/08: CIA-RDP82-00850R000300090014-4

4-4-12. Continuation

(1) Тип и условное обозначение	(2) Расчетные условия		(5) Расчетные пролеты, м			(9) Масса, т
	(3) Провод	(4) Район гололедности	(6) Габаритный	(7) Ветровой	(8) Весовой	
(11) Промежуточная одноцепная свободностоящая, П35-1 (рис. 4-18, а)	АС-120 †	I	325	325	405	1,53
		II	290	325	365	
		III	225	325	280	
		IV	190	325	240	
	АСО-150	I	330	330	410	
		II	310	330	390	
		III	240	330	300	
		IV	210	330	260	
(12) Промежуточная двухцепная свободностоящая, П35-2 (рис. 4-18, б)	АС-70	I	275	275	345	1,87
		II	220	275	275	
		III	160	275	190	
		IV	125	275	155	
	АС-95	I	290	290	360	
		II	240	290	300	
		III	165	290	205	
		IV	140	290	175	
	АС-120	I	305	305	380	
		II	270	305	340	
		III	190	305	240	
		IV	165	305	205	
	АС-150	I	305	305	380	
		II	290	305	360	
		III	210	305	260	
		IV	180	305	225	
(13) Анкерная угловая одноцепная свободностоящая на угол поворота до 60°, У35-1 (рис. 4-18, в)	АС-70—АС-150	I—IV	—	—	—	3,05
(14) Анкерная угловая двухцепная свободностоящая на угол поворота до 60°, У35-2 (рис. 4-18, г)	АС-70—АС-150	I—IV	—	—	—	4,95
(15) Промежуточная пониженная, двухцепная свободностоящая, ПС35-2 (рис. 4-18, д)	АС-70—АС-150	III—IV	—	—	—	1,68
(16) Промежуточная двухцепная свободностоящая для горных районов, ПС35-4 (рис. 4-18, е)	АС-70	III	145	205	290	2,15
		IV	120	170	240	
	АС-95	III	160	225	320	
		IV	135	190	270	
	АС-120	III	185	260	370	
		IV	155	215	31	
(17) Промежуточная двухцепная свободностоящая для горных районов, ПС35-4 (рис. 4-18, е)	АС-150	III	200	280	400	2,15
		IV	170	240	340	

APPROVED FOR RELEASE: 2007/02/08: CIA-RDP82-00850R000300090014-4

APPROVED FOR RELEASE: 2007/02/08: CIA-RDP82-00850R000300090014-4

Key:
† - Russian C is equivalent to English S
(1) - Type and nomenclature
(2) - Estimated conditions
(3) - Conductor
(4) - Ice region
(5) - Effective spans, m
(6) - Overall span
(7) - Wind span
(8) - Weight span
(9) - Mass, t
(10)- Intermediate single-circuit free-standing PD35-1, fig. 4-18, *a*
(11)- Intermediate single-circuit free-standing PD35-1, fig. 4-18, *a*
(12)- Intermediate two-circuit free-standing P35-2, fig. 4-18, *b*
(13)- Anchor-angle single-circuit free-standing with an angle of deflection of up to 60°, U35-1, fig. 4-18, *c*
(14)- Anchor-angle two-circuit free-standing with an angle of deflection of up to 60°, U35-2, fig. 4-18, *d*
(15)- Intermediate lowered two-circuit free-standing, PS35-2, fig. 4-18, *e*
(16)- Intermediate two-circuit free-standing for mountainous regions, PS35-4, fig. 4-18, *e*
(17)- Intermediate two-circuit free-standing for mountainous regions, PS35-4, fig. 4-18, *e*

Notes:

1. Towers developed by North-West Branch of Energoset'proyekt in 1969 for wind region III, except for tower PS35-4, which is designed for wind region V.

2. All towers are designed to carry the S-35 cable.

3. The height of the lower cross-piece on the P35-1 tower in ice regions I and II is 15 meters, and 14 m in ice regions III and IV. For the P35-2 tower, the heights are 14 and 12 m, respectively.

4. On cable sections of 35-kV overhead lines with AS-150 conductors, the spans must be greater than 240 m in ice region I, 180 m in ice region II and 120 m in regions III and IV.

5. All 35-kV towers are erected without cable supports. Cable supports are ordered separately.

6. The effective overall spans for anchor-angle towers are the same as for the corresponding types of intermediate towers.

7. The length of the supporting insulators is 0.8 m in wind region III and 0.9 m in wind region V.

8. The values for the wind and weight spans for the lowered PS35-2 tower are the same as for the P35-2 tower. The values for the overall spans for this tower are indicated in the installation diagram.

APPROVED FOR RELEASE: 2007/02/08: CIA-RDP82-00850R000300090014-4

APPROVED FOR RELEASE: 2007/02/08: CIA-RDP82-00850R000300090014-4

9. The maximum deflection angle for lines in wind region V and ice regions III and IV on U35-1 towers with AS-150 conductors and a lightning-protection cable is limited to 48°. On the U35-2 tower it is limited to 50°.

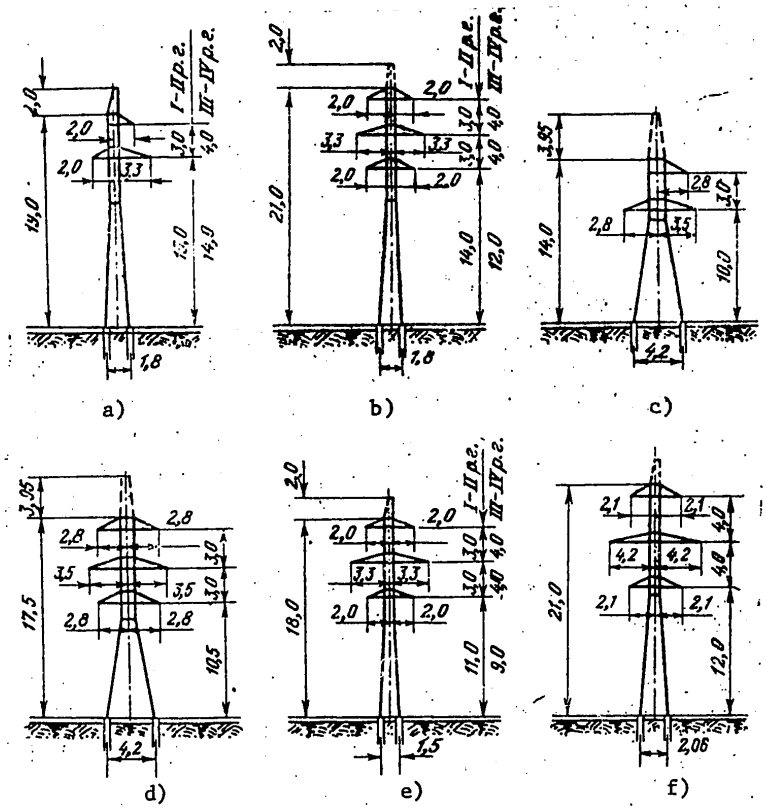

Fig. 4-18. Standardized 35-kV Steel Towers

APPROVED FOR RELEASE: 2007/02/08: CIA-RDP82-00850R000300090014-4

APPROVED FOR RELEASE: 2007/02/08: CIA-RDP82-00850R000300090014-4

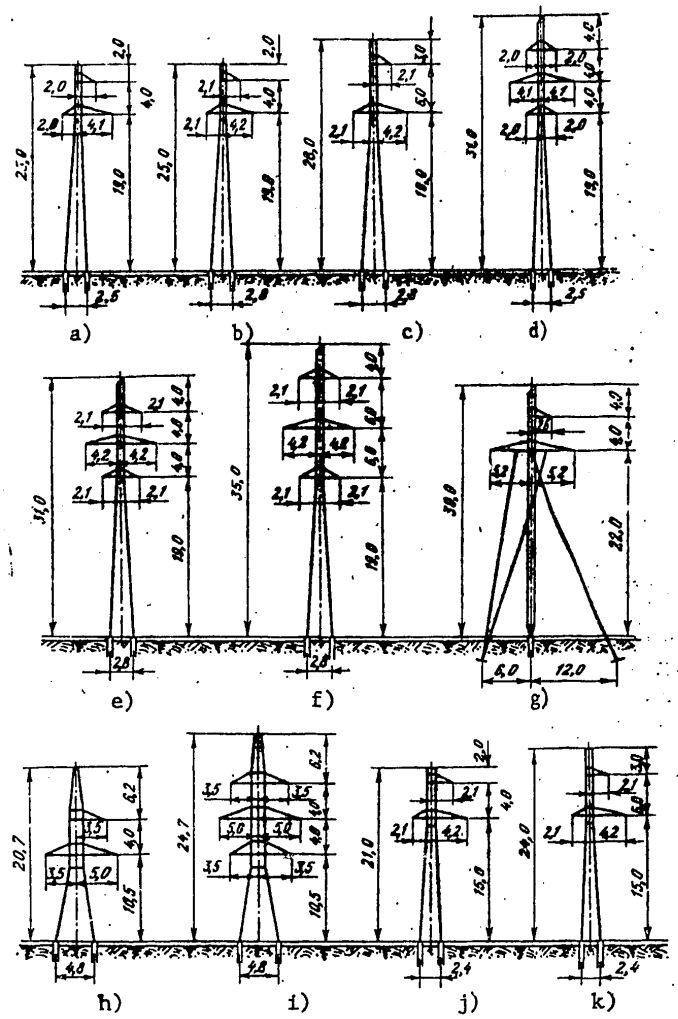

Fig. 4-19. Standardized 110-kV Steel Towers

APPROVED FOR RELEASE: 2007/02/08: CIA-RDP82-00850R000300090014-4

APPROVED FOR RELEASE: 2007/02/08: CIA-RDP82-00850R000300090014-4

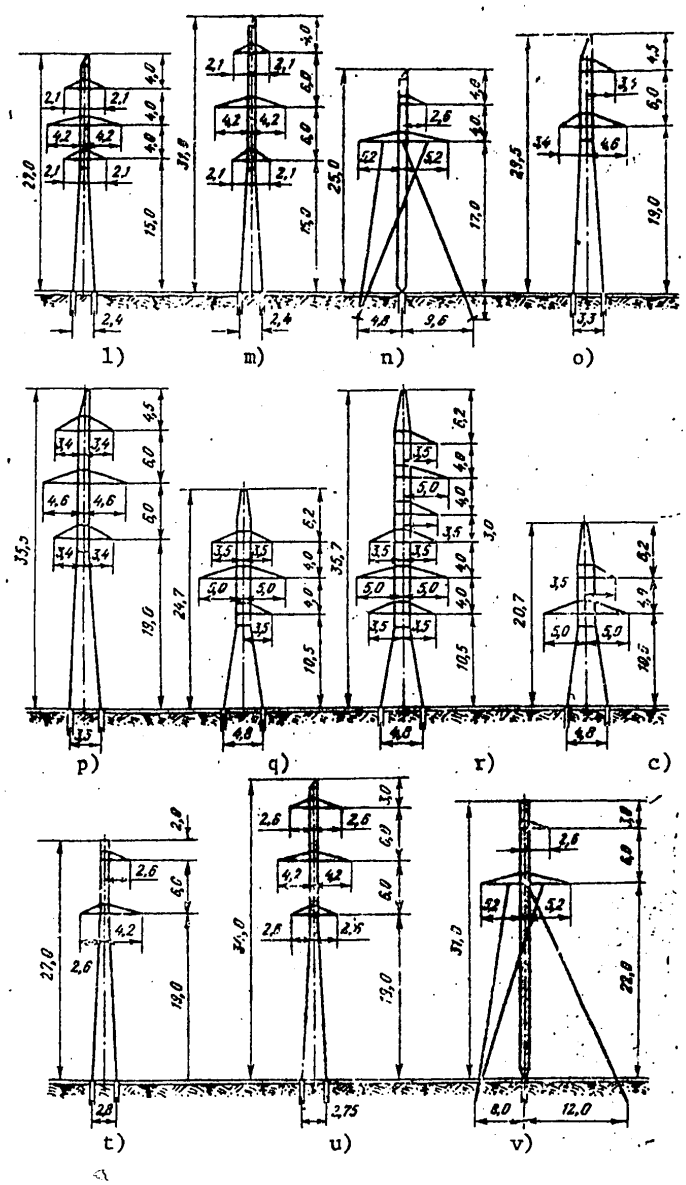

Fig. 4-19. Standardized 110-kV Steel Towers

APPROVED FOR RELEASE: 2007/02/08: CIA-RDP82-00850R000300090014-4

APPROVED FOR RELEASE: 2007/02/08: CIA-RDP82-00850R000300090014-4

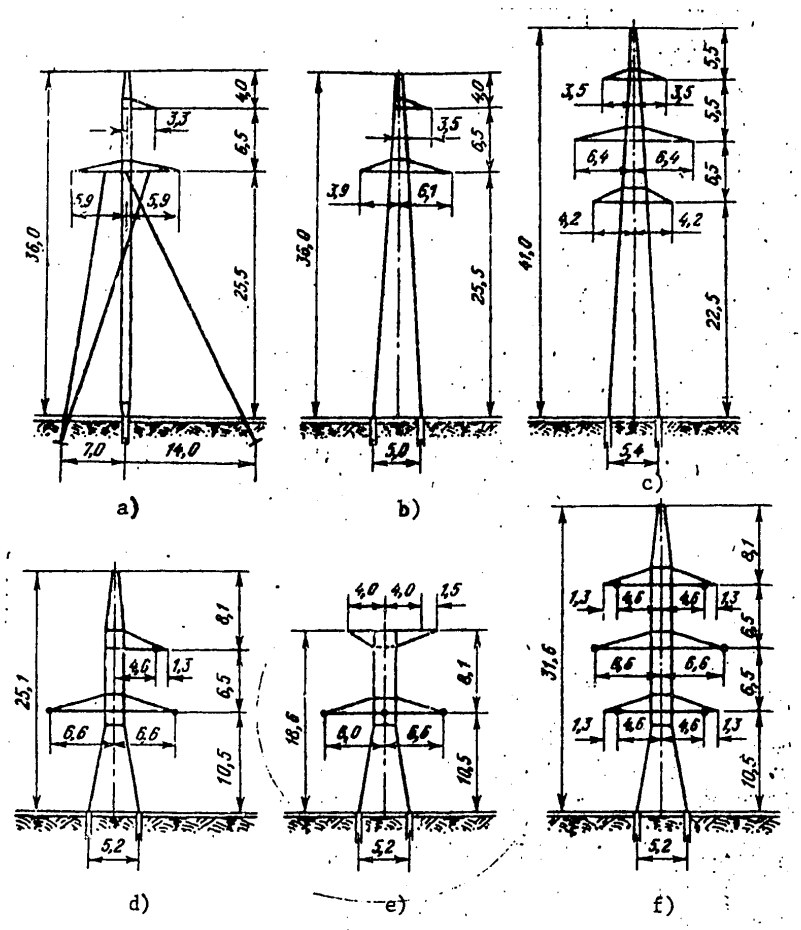

Fig. 4-21. Standardized 220-kV Steel Towers

APPROVED FOR RELEASE: 2007/02/08: CIA-RDP82-00850R000300090014-4

APPROVED FOR RELEASE: 2007/02/08: CIA-RDP82-00850R000300090014-4

4-4-13. Standardized 110-kV Steel Towers

(1) Тип и условное обозначение	(2) Расчетные условия			(6) Расчетные пролеты, м			(10) Масса, т
	(3) Провод	(4) Район по гололедности	(5) Район по ветру	(7) Габаритный	(8) Ветровой	(9) Весовой	
(11) Промежуточная одноцепная свободностоящая, П110-1 (рис. 4-19, а)	АС-70 †	I II	III	355 280	355 355	445 350	1,95
	АС-95	I II	III	375 305	375 375	470 380	
(12) То же П110-3 (рис. 4-19, б)	АС-120*	I II	III	405 345	405 405	505 430	2,55
	АС-150	I II	III	405 365	405 405	505 455	
	АС-185	I II	III	405 380	405 405	505 475	
	АСО-240	I II	III	395 380	395 395	495 475	
(13) То же П110-5 (рис. 4-19, в)	АС-70	III IV	III	225 190	225 225	280 240	2,67
	АС-95	III IV	III	250 210	250 250	315 265	
	АС-120	III IV	III	290 265	290 245	305 305	
	АС-150	III IV	III	310 265	310 310	390 330	
	АС-185	III IV	III	325 280	325 325	405 350	
	АСО-240	III IV	III	330 290	330 330	415 360	
(14) Промежуточная двухцепная свободностоящая, П110-2 (рис. 4-19, г)	АС-70	I II	III	355 280	355 355	445 350	2,73
	АС-95	I II	III	375 305	375 375	470 380	
(15) То же П110-4 (рис. 4-19, д)	АС-120	I II	III	405 345	405 405	505 430	3,31
	АС-150	I II	III	405 365	405 405	505 455	
	АС-185	I II	III	405 380	405 405	505 475	
	АСО-240	I II	III	395 380	395 395	495 475	
(16) То же П110-6 (рис. 4-19, е)	АС-70	III IV	III	225 190	225 225	280 240	3,86

APPROVED FOR RELEASE: 2007/02/08: CIA-RDP82-00850R000300090014-4

APPROVED FOR RELEASE: 2007/02/08: CIA-RDP82-00850R000300090014-4

4-4-13. Continuation

(1) Тип и условное обозначение	(2) Расчетные условия			(6) Расчетные пролеты, м			(10) Масса, т
	(3) Провод	(4) Район гололедности	(5) Район по ветру	(7) Габаритный	(8) Ветровой	(9) Весовой	
(17) Промежуточная двухцепная свободностоящая, П110-6 (рис. 4-19, *в*)	АС-95	III IV	III	250 210	250 250	315 265	3,86
	АС-120	III IV	III	290 245	290 290	365 305	
	АС-150	III IV	III	310 265	310 310	390 330	
	АС-185	III IV	III	325 280	325 325	405 350	
	АСО-240	III IV	III	330 290	330 330	415 360	
(18) Промежуточная одноцепная на оттяжках, П110-7 (рис. 4-19, *ж*)	АС-120	I II	III	460 330	460 460	575 485	2,75
	АС-150	I II	III	460 410	460 460	575 515	
	АС-185	I II	III	460 430	460 460	575 540	
	АСО-240	I II	III	450 430	450 450	565 540	
(19) Анкерная угловая одноцепная свободностоящая на угол поворота линии до 60°, У110-1 (рис. 4-19, *з*)	АС-70—АСО-240	I—IV	III	—	—	—	5,15
(20) Анкерная угловая двухцепная свободностоящая на угол поворота линии до 60°, У110-2 (рис. 4-19, *и*)	АС-70—АСО-240	I—IV	III	—	—	—	8,11
(21) Промежуточная пониженная одноцепная свободностоящая, ПС110-3 (рис. 4-19, *к*)	АС-120—АСО-240	I и II	III	—	—	—	2,12
(22) То же ПС110-5 (рис. 4-19, *л*)	АС-70—АСО-240	III и IV	III	—	—	—	2,25
(23) Промежуточная пониженная двухцепная свободностоящая, ПС110-4 (рис. 4-19, *м*)	АС-120—АСО-240	I и II	III	—	—	—	2,92
(24) То же ПС110-6 (рис. 4-19, *н*)	АС-70—АСО-240	III и IV	III	—	—	—	3,39
(25) Промежуточная пониженная одноцепная на оттяжках, ПС110-7 (рис. 4-19, *о*)	АС-120-АСО-240	I и II	III	—	—	—	2,46

APPROVED FOR RELEASE: 2007/02/08: CIA-RDP82-00850R000300090014-4

APPROVED FOR RELEASE: 2007/02/08: CIA-RDP82-00850R000300090014-4

4-4-13. Continuation

(1) Тип и условное обозначение	(2) Расчетные условия			(6) Расчетные пролеты, м			(10) Масса, т
	(3) Провод	(4) Район гололедности	(5) Район по ветру	(7) Габоритный	(8) Ветровой	(9) Весовой	
(26) Промежуточная угловая одноцепная свободностоящая на угол поворота до 10°, ПУС110-1 (рис. 4-19, *п*)	АС-70	III IV	V	240 205	335 285	480 410	4,57
	АС-120	III IV	V	275 235	385 330	550 470	
	АС-150	III IV	V	295 255	400 360	590 510	
	АС-185	III IV	V	315 270	400 380	600 540	
	АСО-240	III IV	V	320 280	400 390	600 560	
(27) Промежуточная угловая двухцепная свободностоящая на угол поворота до 10°, ПУС110-2 (рис. 4-19, *р*)	АС-70—АСО-240	III IV	V	То же, что для опоры ПУС110-1 (28)			6,89
(29) Анкерная угловая ответвительная одноцепная свободностоящая УС110-7 (рис. 4-19, *с*)	АС-70—АСО-240	I—IV	III	—	—	—	7,9
(30) То же, но двухцепная, УС110-8 (рис. 4-19, *т*)	АС-70—АСО-240	I—IV	III	—	—	—	12,5
(31) Анкерная угловая одноцепная с горизонтальным расположением проводов свободностоящая, УС110-3 (рис. 4-19, *у*)	АС-70—АСО-240	I—IV	III	—	—	—	5,4
(32) Промежуточная одноцепная свободностоящая для горных условий, ПС110-9 (рис. 4-19, *ф*)	АС-70—АСО-240	III IV	V	То же, что для опоры ПУС110-1 (33)			2,96
(34) То же, но двухцепная, ПС110-10 (рис. 4-19, *х*)	АС-70—АСО-240	III IV	V	То же, что для опоры (35) ПУС110-1			4,8
(36) Промежуточная одноцепная на оттяжках для горных условий, ПС110-11 (рис. 4-19, *ц*)	АС-120	III IV	V	310 265	430 370	620 530	3,14
	АС-150	III IV	V	330 285	460 400	660 570	
	АС-185	III IV	V	350 305	490 430	700 610	
	АСО-240	III IV	V	360 315	500 440	720 630	

APPROVED FOR RELEASE: 2007/02/08: CIA-RDP82-00850R000300090014-4

APPROVED FOR RELEASE: 2007/02/08: CIA-RDP82-00850R000300090014-4

Key:
+ - Russian C is equivalent to English S
(1) - Type and nomenclature
(2) - Estimated conditions
(3) - Conductor
(4) - Ice area
(5) - Wind area
(6) - Effective span, m
(7) - Overall span
(8) - Wind span
(9) - Weight span
(10)- Mass, t
(11)- Intermediate single-circuit free-standing P110-1, fig. 4-19, *a*
(12)- Same, P110-3, fig. 4-19, *b*
(13)- Same, P110-5, fig. 4-19, *c*
(14)- Intermediate two-circuit free-standing P110-2, fig. 4-19, *d*
(15)- Same, P110-4, fig. 4-19, *e*
(16)- Same, P110-6, fig. 4-19, *f*
(17)- Intermediate two-circuit free-standing P110-6, fig. 4-19, *f*
(18)- Intermediate single-circuit on guys, P110-7, fig. 4-19, *g*
(19)- Anchor-angle single-circuit free-standing with a line deflection angle of up to 60°, U110-1, fig. 4-19, *h*
(20)- Anchor-angle two-circuit free-standing with a line deflection angle of up to 60°, U110-2, fig. 4-19, *i*
(21)- Intermediate lowered single-circuit free-standing, PS110-5, fig. 4-19, *j*
(22)- Same, PS110-5, fig. 4-19, *k*
(23)- Intermediate lowered two-circuit free-standing, PS110-4, fig. 4-19, *l*
(24)- Same, PS110-6, fig. 4-19, *m*
(25)- Intermediate lowered single-circuit on guys, PS110-7, fig. 4-19, *n*
(26)- Angle-suspension single-circuit free-standing with a deflection angle of up to 10°, PUS110-1, fig. 4-19, *o*
(27)- Angle-suspension two-circuit free-standing with a deflection angle of up to 10°, PUS110-2, fig. 4-19, *p*
(28)- Same as for PUS110-1 towers
(29)- Anchor-angle dividing single-circuit free-standing US110-7, fig. 4-19, *q*
(30)- Same, but two-circuit, US110-8, fig. 4-19, *r*
(31)- Anchor-angle single-circuit free-standing with horizontally disposed conductors, US110-3, fig. 4-19, *s*
(32)- Intermediate single-circuit free-standing for mountainous regions, PS110-9, fig. 4-19, *t*
(33)- Same as for PUS110-1 towers
(34)- Same, but two-circuit, PS110-10, fig. 4-19, *u*
(35)- Same as for PUS110-1 towers
(36)- Intermediate single-circuit on guys for mountainous regions, PS110-11, fig. 4-19, *v*

APPROVED FOR RELEASE: 2007/02/08: CIA-RDP82-00850R000300090014-4

APPROVED FOR RELEASE: 2007/02/08: CIA-RDP82-00850R000300090014-4

Notes:

1. Towers developed by the North-West Branch of Energoset'proyekt in 1969 and designed to carry the S-50 cable.

2. Effective overall spans for anchor-angle towers are the same as for the corresponding intermediate towers.

3. When ASO-240 conductors are carried on U110-2 towers and there is a difference in the stresses on the tower, the overhead-line deflection angle is limited to 50° in ice region II and 48° in ice regions III and IV. In the absence of a stress difference, the angle is limited to 58° in ice region II and to 50° in ice regions III and IV.

4. The length of the supporting insulator is taken to be 1.3 m.

5. U110-1 and U110-2 towers can be utilized as dead-end towers. In this case, the deflection angles permitted on dead-end towers are indicated on the tower-installation diagrams. In cases where the deflection angles on the dead-end towers exceed these values, the towers are erected not on the bisector of the angle, but with a limiting angle relative to the line. This angle is indicated in the installation diagram. In these cases, it is necessary to check the aerial spacing from the conductor to the tower.

6. P35-1 towers must be used as lowered intermediate towers in ice regions I and II for AS-70 and AS-95 conductors and P35-2 towers with cable supports must be used in ice regions III and IV.

7. Extended intermediate towers are erected by using normal towers with 4-m extensions. Extended anchor-angle towers are erected by using normal towers with one 9-m or two 5 and 9-m extensions. The extensions are ordered separately.

8. The deflection angle on PUS110-2 towers must not exceed 8° when carrying AS-185 or ASO-240 conductors.

9. The limiting line-deflection angle in wind region V and ice regions III and IV for U110-1 towers with ASO-240 conductors and a lightning-protection cable is restricted to 55° and to 45° for U110-2 towers.

10. The lowered PS110-7 tower can also be used on 150-kV overhead lines.

11. Special anchor-angle towers with a deflection angle of up to 60° (US110-5 and US110-6) and intermediate towers (PS110-13) have been developed for installation under city conditions. These towers have a narrow base and are designed to carry AS-70 to AS-240 conductors in ice regions I-IV (anchor towers) and in ice regions I and II (intermediate towers).

APPROVED FOR RELEASE: 2007/02/08: CIA-RDP82-00850R000300090014-4

APPROVED FOR RELEASE: 2007/02/08: CIA-RDP82-00850R000300090014-4

4-4-14. Standardized 150-kV Steel Towers

(1) Тип и условное обозначение	(2) Расчетные условия			(6) Расчетные пролеты, м			(10) Масса, т
	(3) Провод	(4) Район гололедности	(5) Район по ветру	(7) Габаритный	(8) Ветровой	(9) Весовой	
(11) Промежуточная одноцепная свободностоящая, П150-1 (рис. 4-20, *а*)	АС-120 †	I	III	385	385	400	2,7
		II		335	385	420	
		III		275	385	345	
		IV		235	385	295	
	АС-150	I	III	385	385	480	
		II		350	385	440	
		III		295	385	370	
		IV		255	385	320	
	АС-185	I	III	385	385	480	
		II		365	385	455	
		III		315	385	390	
		IV		270	385	340	
	АСО-240	I	III	380	380	475	
		II		370	380	460	
		III		320	380	400	
		IV		280	380	350	
(12) То же двухцепная, П150-2 (рис. 4-20, *б*)	АС-120	I	III	385	385	480	3,93
		II		335	385	420	
		III		275	385	345	
		IV		235	385	295	
	АС-150	I	III	385	370	480	
		II		350	370	440	
		III		295	370	370	
		IV		255	370	320	
	АС-185	I	III	385	330	480	
		II		365	330	455	
		III		315	330	390	
		IV		270	330	340	
	АСО-240	I	III	380	320	475	
		II		370	320	460	
		III		320	320	400	
		IV		280	320	350	
(13) Промежуточная одноцепная на оттяжках, П110-7 (рис. 4-19, *ж*)	АС-120	I	III	445	445	555	2,75
		II		375	445	470	
	АС-150	I	III	445	445	555	
		II		400	445	500	
	АС-185	I	III	445	445	555	
		II		415	445	520	
	АСО-240	I	III	440	440	550	
		II		420	440	525	
(14) Промежуточная одноцепная на оттяжках для горных условий, ПС110-11 (рис. 4-19, *ц*)	АС-120	III	V	305	430	610	3,14
		IV		260	365	520	
	АС-150	III	V	325	450	650	
		IV		280	390	560	

APPROVED FOR RELEASE: 2007/02/08: CIA-RDP82-00850R000300090014-4

APPROVED FOR RELEASE: 2007/02/08: CIA-RDP82-00850R000300090014-4

4-4-14. Continuation

(1) Тип и условное обозначение	(2) Расчетные условия			(6) Расчетные пролеты, м			(10) Масса, т
	(3) Провод	(4) Район гололедности	(5) Район по ветру	(7) Габаритный	(8) Ветровой	(9) Весовой	
(15) Промежуточная одноцепная на оттяжках для горных условий, ПС110-11 (рис. 4-19, ц)	АС-185	III IV	V	325 300	450 420	650 600	3,14
	АСО-240	III IV	V	355 310	500 430	710 620	

Key:
† - Russian C is equivalent to English S
(1) - Type and nomenclature
(2) - Estimated conditions
(3) - Conductors
(4) - Ice area
(5) - Wind area
(6) - Effective spans, m
(7) - Overall span
(8) - Wind span
(9) - Weight span
(10)- Mass, t
(11)- Intermediate single-circuit free-standing, P150-1, fig. 4-20, *a*
(12)- Same, two-circuit, P150-2, fig. 4-20, *b*
(13)- Intermediate single-circuit on guys, P110-7, fig. 4-19, *g*
(14)- Intermediate single-circuit on guys for mountainous regions, PS110-11, fig. 4-19, *v*
(15)- Intermediate single-circuit on guys for mountainous regions, PS110-11, fig. 4-19, *v*

Notes:

1. Towers designed by the North-West Branch of Energoset'proyekt in 1969 to support the S-50 cable.

2. Anchor-angle towers for 150-kV overhead lines are used in the same manner as for 110-kV overhead lines (see 4-4-13).

3. At overhead-line deflection angles of more than 26°, supporting insulators must be carried on anchor-angle towers in order to enclose the circuit conductors.

4. The length of the supporting insulator is 1.6 m.

5. The PS110-7 tower can be used as a lowered intermediate tower.

6. The P110-5 and P110-6 towers with extensions can be used as extended intermediate towers.

APPROVED FOR RELEASE: 2007/02/08: CIA-RDP82-00850R000300090014-4

APPROVED FOR RELEASE: 2007/02/08: CIA-RDP82-00850R000300090014-4

7. The U110-1 and U110-2 towers with one and two extensions can be used as extended intermediate towers.

8. The US110-7 and US110-8 towers can be used as dividing anchor-angle towers.

9. The PUS110-1 tower can be used as a single-circuit angle-suspension tower.

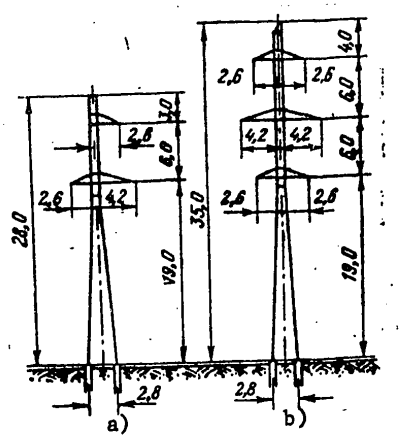

Fig. 4-20. Standardized 150-kV Steel Towers

4-4-15. Standardized 220-kV Steel Towers

(1) Тип и условное обозначение	(2) Расчетные условия		(5) Расчетные пролеты, м			(9) Масса, т
	(3) Провод	(4) Район гололедности	(6) Габаритный	(7) Ветровой	(8) Весовой	
(10) Промежуточная одноцепная на оттяжках, П220-1 (рис. 4-21, *а*)	АСО-300	I	475	475	595	3,75
		II	465	475	580	
		III	415	475	520	
		IV	360	475	450	
	АСО-400	I	475	475	595	
		II	475	475	595	
		III	435	475	545	
		IV	390	475	490	
(11) Промежуточная одноцепная свободностоящая, П220-3 (рис. 4-21, *б*)	АСО-400	I	475	475	595	4,85
		II	475	475	595	
		III	475	475	545	
		IV	475	475	490	

APPROVED FOR RELEASE: 2007/02/08: CIA-RDP82-00850R000300090014-4

APPROVED FOR RELEASE: 2007/02/08: CIA-RDP82-00850R000300090014-4

4-4-15. Continuation

(1) Тип и условное обозначение	(2) Расчетные условия		(5) Расчетные пролеты, м			(9) Масса, т
	(3) Провод	(4) Районы гололедности	(6) Габаритный	(7) Ветровой	(8) Весовой	
(12) Промежуточная двухцепная свободностоящая, П220-2 (рис. 4-21, в)	АСО-300	I II III IV	425 420 375 330	425 425 425 425	530 525 470 415	6,32
	АСО-400	I II III IV	425 425 390 355	425 425 425 425	530 530 490 440	
(13) Анкерно-угловая одноцепная с одним тросом на угол поворота до 60°, У220-1 (рис. 4-21, г)	АСО-300 АСО-400	I—IV	—	—	—	8,81
(14) То же, но с двумя тросами и горизонтальным расположением проводов, У220-3 (рис. 4-21, д)	АСО-300 АСО-400	I—IV	—	—	—	7,33
(15) Анкерно-угловая двухцепная на угол поворота до 60°, У220-2 (рис. 4-21, е)	АСО-300 АСО-400	I—IV	—	—	—	14,74

Key:
† - Russian C is equivalent to English S
(1) - Type and nomenclature
(2) - Estimated conditions
(3) - Conductor
(4) - Ice area
(5) - Effective spans, m
(6) - Overall span
(7) - Wind span
(8) - Weight span
(9) - Mass, t
(10)- Intermediate single-circuit on guys, P220-1, fig. 4-21, *a*
(11)- Intermediate single-circuit free-standing, P220-3, fig. 4-21, *b*

APPROVED FOR RELEASE: 2007/02/08: CIA-RDP82-00850R000300090014-4

APPROVED FOR RELEASE: 2007/02/08: CIA-RDP82-00850R000300090014-4

(12)- Intermediate two-circuit free-standing, P220-2, fig. 4-21, *c*
(13)- Anchor-angle single-circuit with one cable and a deflection angle of up to 60°, U220-1, fig. 4-21, *d*
(14)- Same, but with two cables and horizontally disposed conductors, U220-3, fig. 4-21, *e*
(15)- Anchor-angle two-circuit with a deflection angle of up to 60°, U220-2, fig. 4-21, *f*

Notes:

1. Towers designed by the North-West Branch of Energoset'proyekt in 1969 for wind region III.

2. The length of the supporting insulator is 2.4 m. The lightning-protection cable is the S-70.

3. The U220-1 and U220-2 anchor-angle towers can also be used to support two cables, using a special cable support for two cables.

4. The tension in the lightning-protection cable must not exceed 40 kgs/mm^2.

5. All anchor-angle towers can be used as dead-end towers. In this case, the deflection angles are indicated in the tower-installation diagrams. In cases where the deflection angles on dead-end towers exceed these values, the towers are erected not on the bisector of the angle but with a limiting angle relative to the line, indicated in the installation diagram. In these cases, it is necessary to check the values for the aerial separation between the conductors and the tower.

6. At deflection angles of more than 21°, it is necessary that supporting insulators be carried (on the outside of the deflection angle) on the upper cross-piece of U220-1 towers and the upper and lower cross-pieces of U220-2 towers in order to enclose the circuit conductors.

7. The effective overall spans for anchor-angle towers are the same as for the corresponding types of intermediate towers.

8. Special lowered intermediate towers have been developed: the PS220-1--on guys, lowered by 9 m; free-standing PS220-3 and PS220-2 towers, lowered by 5 m.

9. Special intermediate and angle-suspension towers have been developed for mountainous regions: free-standing towers (PS220-5 and PS220-6; PUS220-1 and PUS220-2) and towers on guys (PS220-7) for ice regions III and IV and for wind region V.

10. Special anchor-angle towers with a deflection angle of up to 60° (US220-5 and US220-6) have been developed for installation under city conditions. These towers have a narrow base. They are designed for ice regions I-IV.

APPROVED FOR RELEASE: 2007/02/08: CIA-RDP82-00850R000300090014-4

APPROVED FOR RELEASE: 2007/02/08: CIA-RDP82-00850R000300090014-4

(13)- Anchor-angle single-circuit with one cable and a deflection angle of up to 60°, U330-1, fig. 4-22, *d*
(14)- Same, but with two cables and horizontally disposed conductors, U330-3, fig. 4-22, *e*
(15)- Anchor-angle two-circuit with a deflection angle of up to 60°, U330-2, fig. 4-22, *f*

Notes:

1. Towers developed by the North-West Branch of Energoset'proyekt in 1969 for wind region III.

2. The length of the supporting insulator is 3.5 m.

3. The effective overall spans for anchor-angle towers are the same as for the corresponding types of intermediate towers.

4. The lightning-protection cable is the S-70. The tension in this cable must not exceed 40 kgs/mm^2.

5. All anchor-angle towers can be used as dead-end towers. In this case, the deflection angles are indicated in the tower-installation diagrams. In cases where the deflection angles on dead-end towers exceed these values, the towers are erected not on the bisector of the angle but with a limiting angle relative to the line, indicated in the installation diagram. In these cases, it is necessary to check the values for the aerial separation between the conductors and the tower.

6. The U330-1 and U330-2 towers can also be used with two cables, using a special cable support for two cables.

7. At deflection angles of more than 21°, it is necessary that supporting insulators be carried (on the outside of the deflection angle) on the upper cross-piece of the U330-1 tower and on the upper and lower cross-pieces of the U330-2 tower in order to enclose the circuit conductors. For enclosing the circuit of the middle phase on the U330-3 tower at any angle of deflection, it is necessary that two supporting insulators be carried on the upper cross-piece.

APPROVED FOR RELEASE: 2007/02/08: CIA-RDP82-00850R000300090014-4

APPROVED FOR RELEASE: 2007/02/08: CIA-RDP82-00850R000300090014-4

4-4-16. Standardized 330-kV Steel Towers

(1) Тип и условное обозначение	(2) Расчетные условия		(5) Расчетные пролеты, м			(9) Масса опоры, т
	(3) Провод	(4) Районы гололедности	(6) Габаритный	(7) Ветровой	(8) Весовой	
(10) Промежуточная одноцепная свободностоящая, У330-3 (рис. 4-22, *а*)	2×АСО-300†	I II III IV	450 440 385 340	450	565 550 480 425	6,37
	2×АСО-400	I II III IV	450 450 410 370	450	565 565 515 465	
(11) Промежуточная одноцепная на оттяжках, П330-5 (рис. 4-22, *б*)	2×АСО-300	I II III IV	450 440 385 340	450	565 550 480 425	4,6
	2×АСО-400	I II III IV	540 450 410 370	450	565 565 515 465	
(12) Промежуточная двухцепная свободностоящая, П330-2 (рис. 4-22, *в*)	2×АСО-300	I II III IV	395 390 340 305	395	495 490 425 380	10,27
	2×АСО-400	I II III IV	395 395 365 330	395	495 495 455 415	
(13) Анкерно-угловая одноцепная с одним тросом на угол поворота до 60°, У330-1 (рис. 4-22, *г*)	2×АСО-300 2×АСО-400	I—IV	—	—	—	13,16
(14) То же, но с двумя тросами и горизонтальным расположением проводов, У330-3 (рис. 4-22, *д*)	2×АСО-300 2×АСО-400	I—IV	—	—	—	10,64
(15) Анкерно-угловая двухцепная на угол поворота до 60°, У330-2 (рис. 4-22, *е*)	2×АСО-300 2×АСО-400	I—IV	—	—	—	23,02

Key:
† – Russian C is equivalent to English S
(1) – Type and nomenclature
(2) – Estimated conditions
(3) – Conductor
(4) – Ice area
(5) – Effective spans, m
(6) – Overall span
(7) – Wind span
(8) – Weight span
(9) – Mass of tower, t
(10) – Intermediate single-circuit free-standing, P330-3, fig. 4-22, *a*
(11) – Intermediate single-circuit on guys, P330-5, fig. 4-22, *b*
(12) – Intermediate two-circuit free-standing, P330-2, fig. 4-22, *c*

APPROVED FOR RELEASE: 2007/02/08: CIA-RDP82-00850R000300090014-4

APPROVED FOR RELEASE: 2007/02/08: CIA-RDP82-00850R000300090014-4

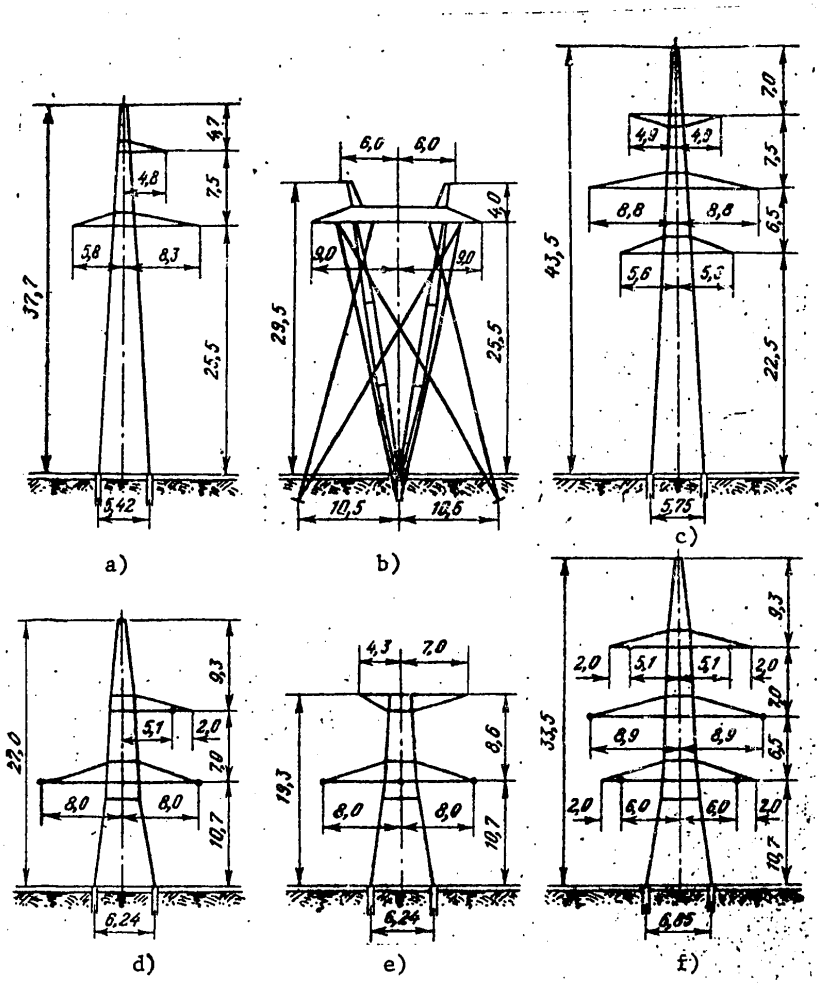

Fig. 4-22. Standardized 330-kV Steel Towers

APPROVED FOR RELEASE: 2007/02/08: CIA-RDP82-00850R000300090014-4

APPROVED FOR RELEASE: 2007/02/08: CIA-RDP82-00850R000300090014-4

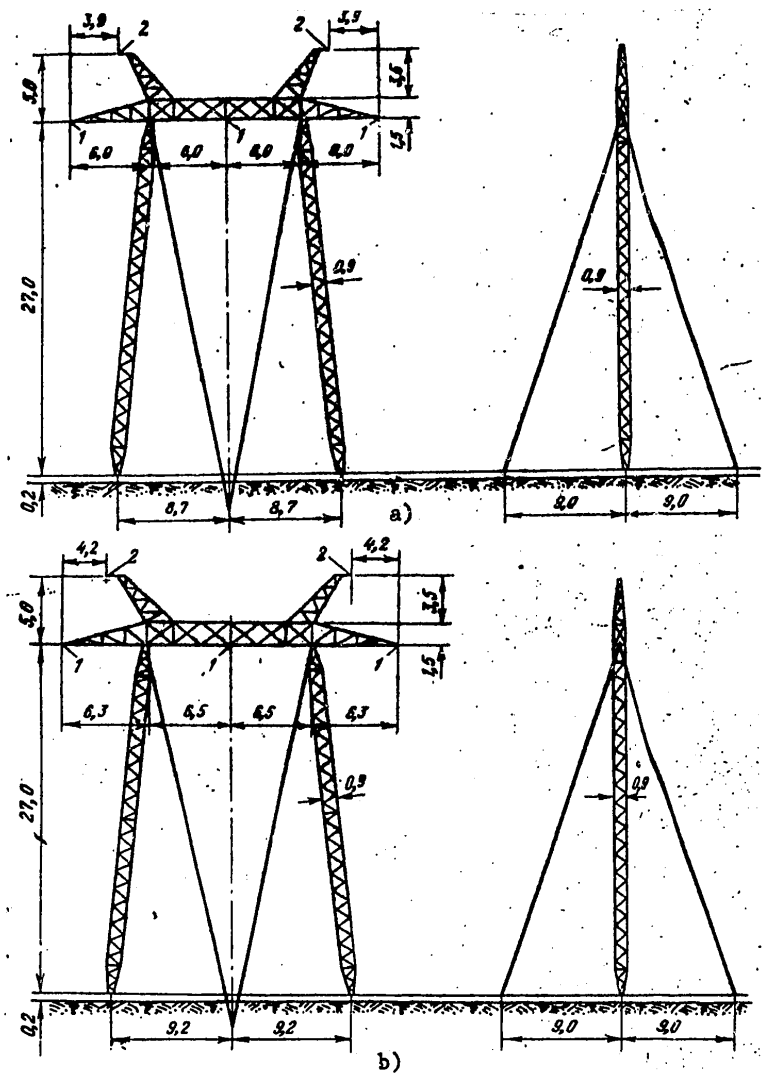

Fig. 4-23. Standard 500-kV Steel Towers

1 - Conductor attachment points
2 - Cable attachment points
3 - Attachment points for circuit-line insulators

APPROVED FOR RELEASE: 2007/02/08: CIA-RDP82-00850R000300090014-4

APPROVED FOR RELEASE: 2007/02/08: CIA-RDP82-00850R000300090014-4

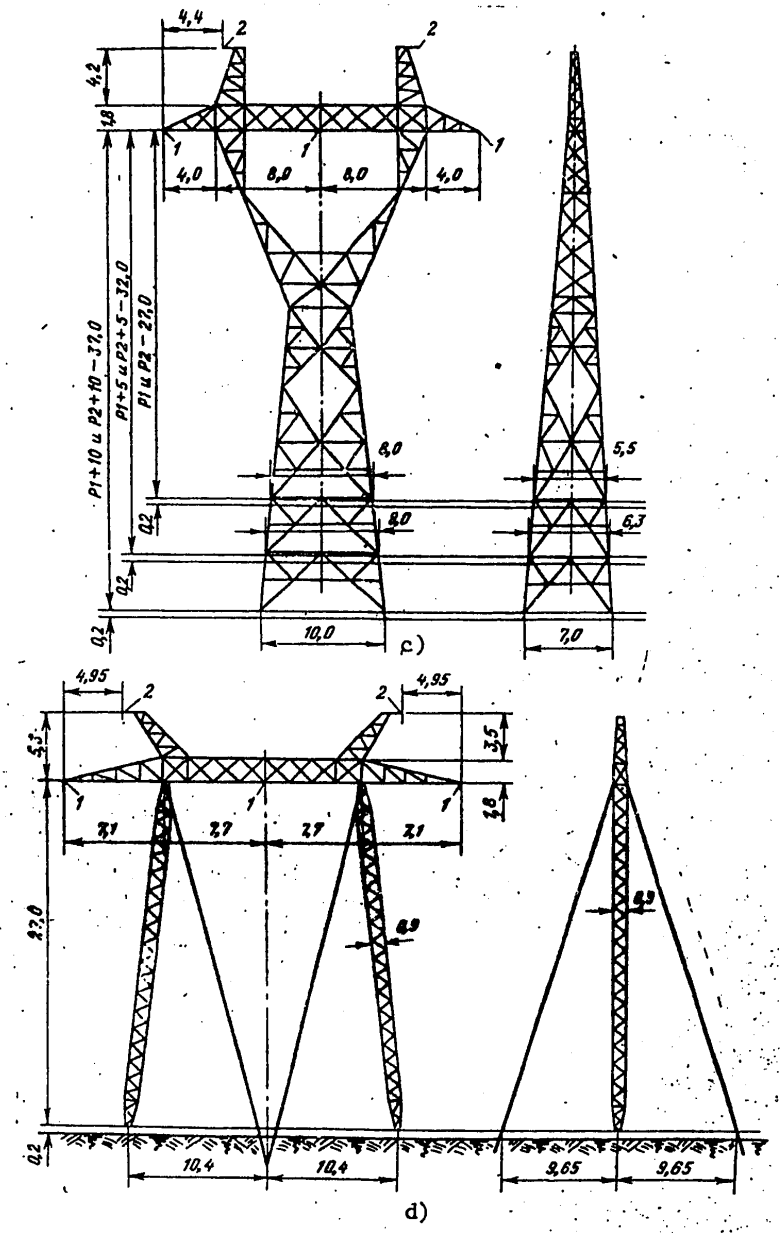

Fig. 4-23. Standard 500-kV Steel Towers

APPROVED FOR RELEASE: 2007/02/08: CIA-RDP82-00850R000300090014-4

APPROVED FOR RELEASE: 2007/02/08: CIA-RDP82-00850R000300090014-4

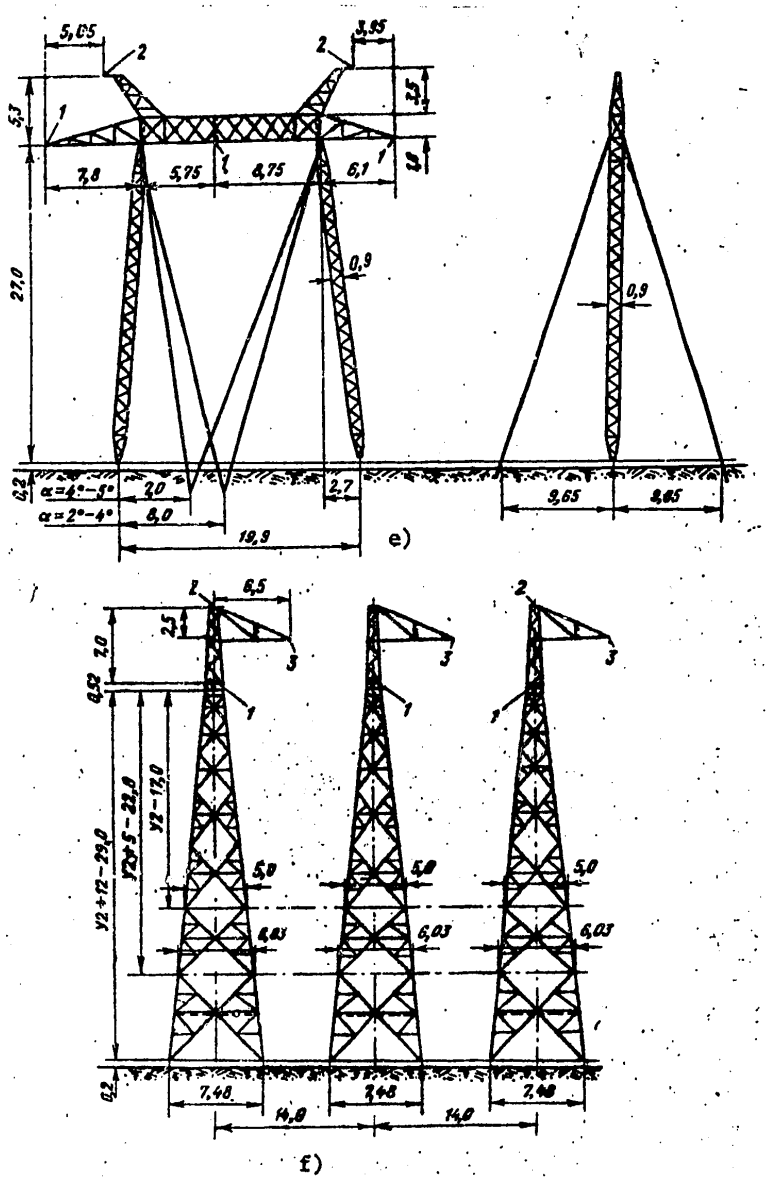

Fig. 4-23. Standard 500-kV Steel Towers

APPROVED FOR RELEASE: 2007/02/08: CIA-RDP82-00850R000300090014-4

APPROVED FOR RELEASE: 2007/02/08: CIA-RDP82-00850R000300090014-4

4-4-17. Standard 500—kV Steel Towers

(1) Тип и условное обозначение	(2) Расчетные условия			(6) Длина пролета, м			(10) Масса, т
	(3) Провод	(4) Район гололедности	(5) Скоростной напор, кгс/м²	(7) габаритного	(8) ветрового	(9) весового	
(11) Промежуточная на оттяжках, ПБ-1 (рис. 4-23, а)	3×АСО-400 + 3×АСО-500	II	55	460 425	460 425	575 530	6,58
(12) То же ПБ-2 (рис. 4-23, а)	3×АСО-400	II III IV	55	460 410 370	460 410 370	575 510 460	6,75
	3×АСО-500	II III IV	55	425 385 350	425 385 350	530 480 437	
(13) То же ПБ-3 (рис. 4-23, б)	3×АСО-400 3×АСО-500	II	80	450 420	450 420	560 525	7,37
(14) То же ПБ-4 (рис. 4-23, б)	3×АСО-400	II III IV	80	450 405 365	450 405 365	560 505 455	7,82
	3×АСО-500	II III IV	80	420 380 345	420 380 345	525 475 430	
(15) То же ПБ-5 (рис. 4-23, б)	3×АСО-400	II III IV	80	450 405 365	450 405 365	525 505 455	8,19
	3×АСО-500	II III IV	80	420 380 345	420 380 345	525 475 430	
(16) То же ПБ-1-3 (рис. 4-23, б)	3×АСО-330	II	55	430	460	575	6,76
(17) Промежуточная свободностоящая, Р2 (рис. 4-23, в)	3×АСО-400	II IV	80	450 365	525 420	655 525	11,49
	3×АСО-500	II IV	80	420 345	485 395	605 495	
(18) То же повышенная на 5 м, Р2+5 (рис. 4-23, в)	3×АСО-400	II IV	80	525 420	525 420	555 525	13,93
	3×АСО-500	II IV	80	485 395	485 395	605 495	
(19) То же повышенная на 10 м, Р2+10 (рис. 4-23, в)	3×АСО-400	II IV	80	— —	525 420	655 525	15,39
	3×АСО-500	II IV	80	— —	485 395	605 495	

APPROVED FOR RELEASE: 2007/02/08: CIA-RDP82-00850R000300090014-4

APPROVED FOR RELEASE: 2007/02/08: CIA-RDP82-00850R000300090014-4

4-4-17. Continuation

(1) Тип и условное обозначение	(2) Расчетные условия			(6) Длина пролета, м			(10) Масса, т
	(3) Провода	(4) Район гололедности	(5) Скоростной напор, кгс/м²	(7) габаритного	(8) ветрового	(9) весового	
(20) Промежуточная угловая на оттяжках на угол до 2°, ПУБ 2 (рис. 4-23, г)	3×АСО-400	II III IV	80	450 405 365	450 405 365	560 505 455	9,42
	3×АСО-500	II III IV	80	420 380 345	420 380 345	525 475 430	
(21) То же на угол 2—5°, ПУБ 5 (рис. 4-23, д)	3×АСО-400	II III IV	80	450 405 365	450 405 365	560 505 455	9,28
	3×АСО-500	II III IV	80	420 380 345	420 380 345	525 475 430	
(22) Анкерная угловая трехстоечная свободностоящая на угол до 60°, У2 (рис. 4-23, е)	3×АСО-400	II III IV	55	— — —	460 410 370	690 615 555	16,19
		II III IV	80	— — —	450 405 365	675 610 560	
	3×АСО-500	II III IV	55	— — —	425 385 350	640 580 525	
		II III IV	80	— — —	420 380 345	630 570 520	
(23) То же повышенная на 5 м, У2+5 (рис. 4-23, е)	(24) Расчетные условия и длины пролетов те же, что для опоры У2						21,4
(25) То же повышенная на 12 м, У2+12 (рис. 4-23, е)	(26) Расчетные условия и длины пролетов те же, что для опоры У2						28,85

Key:
† - Russian C is equivalent to English S
(1) - Type and nomenclature
(2) - Estimated conditions
(3) - Conductors
(4) - Ice area
(5) - Velocity head, kgs/m^2
(6) - Length of span, m
(7) - Overall span
(8) - Wind span
(9) - Weight span

APPROVED FOR RELEASE: 2007/02/08: CIA-RDP82-00850R000300090014-4

APPROVED FOR RELEASE: 2007/02/08: CIA-RDP82-00850R000300090014-4

(10)- Mass, t
(11)- Intermediate on guys, PB-1, fig. 4-23, *a*
(12)- Same, PB-2, fig. 4-23, *a*
(13)- Same, PB-3, fig. 4-23, *b*
(14)- Same, PB-4, fig. 4-23, *b*
(15)- Same, PB-5, fig. 4-23, *b*
(16)- Same, PB-1-3, fig. 4-23, *b*
(17)- Intermediate free-standing, R2, fig. 4-23, *c*
(18)- Same, elevated 5 m, R2+5, fig. 4-23, *c*
(19)- Same, elevated 10 m, R2+10, fig. 4-23, *c*
(20)- Angle-suspension on guys with a deflection angle of up to 2°, PUB2, fig. 4-23, *d*
(21)- Same, deflection angle 2-5°, PUB5, fig. 4-23, *e*
(22)- Anchor-angle three-strut free-standing with an angle of deflection of up to 60°, U2, fig. 4-23, *f*
(23)- Same, elevated 5 m, U2+5, fig. 4-23, *f*
(24)- Estimated conditions and span lengths are the same as for the U2 tower.
(25)- Same, elevated 12 m, U2+12, fig. 4-23, *f*
(26)- Estimated conditions and span lengths are the same as for the U2 tower.

Notes:

1. Towers developed by the Energoset'proyekt ODP [expansion not provided] in 1968 and designed to support two S-70 cables.

2. The tower material is steel--VMSt-3 and 14G2; guys for PB-1, PB-2 and PB-1-3 towers are steel cable 15.5-140-V-SS and 21.0-120-V-SS for towers PUB2 and PUB5; the steel casting is St-351. Tower design is galvanized bolt. Intermediate galvanized welded tower designs on guys (PS1, PS1-3, etc.) have also been developed.

3. Tower weights are given before galvanizing. The expenditure of zinc is 30g/kg.

4. The greatest normal tension in ASO-330 and ASO-400 conductors is 11.3 kgs/mm^2, while for ASO-500 it is 9.31 kgs/mm^2. The tension under average operating conditions is 6.75 kgs/mm^2.

5. The PB-5 tower provides for the application of supporting dead-ends. All other intermediate towers use clamps that fix the cables with limited rigidity.

6. The U2, U2+5 and U2+12 towers can be used as dead-end and transposition towers. For this, a special arrangement is employed for positioning the individual tower struts.

APPROVED FOR RELEASE: 2007/02/08: CIA-RDP82-00850R000300090014-4

APPROVED FOR RELEASE: 2007/02/08: CIA-RDP82-00850R000300090014-4

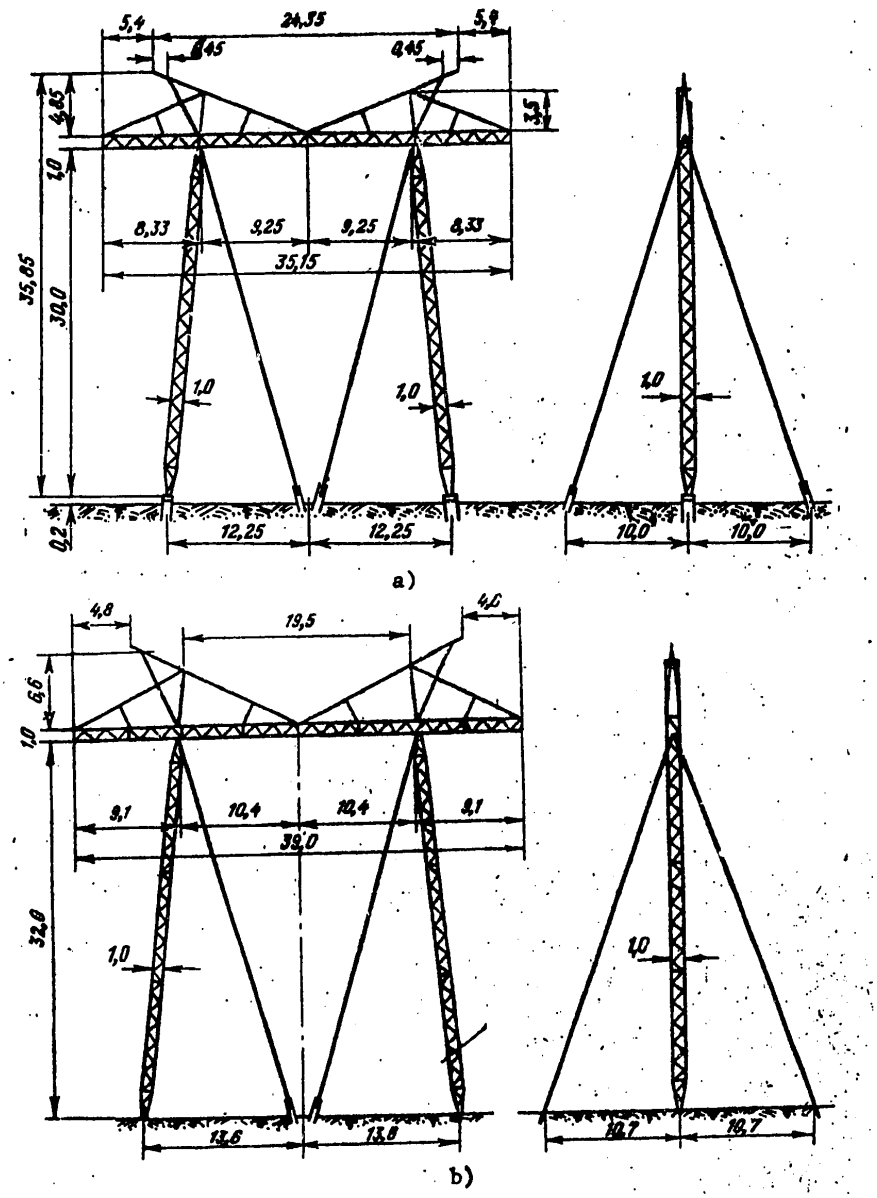

Fig. 4-24. Standard 750-kV Steel Towers

1 - Conductor attachment points
2 - Cable attachment points
3 - Attachment points for circuit-line insulators

APPROVED FOR RELEASE: 2007/02/08: CIA-RDP82-00850R000300090014-4

APPROVED FOR RELEASE: 2007/02/08: CIA-RDP82-00850R000300090014-4

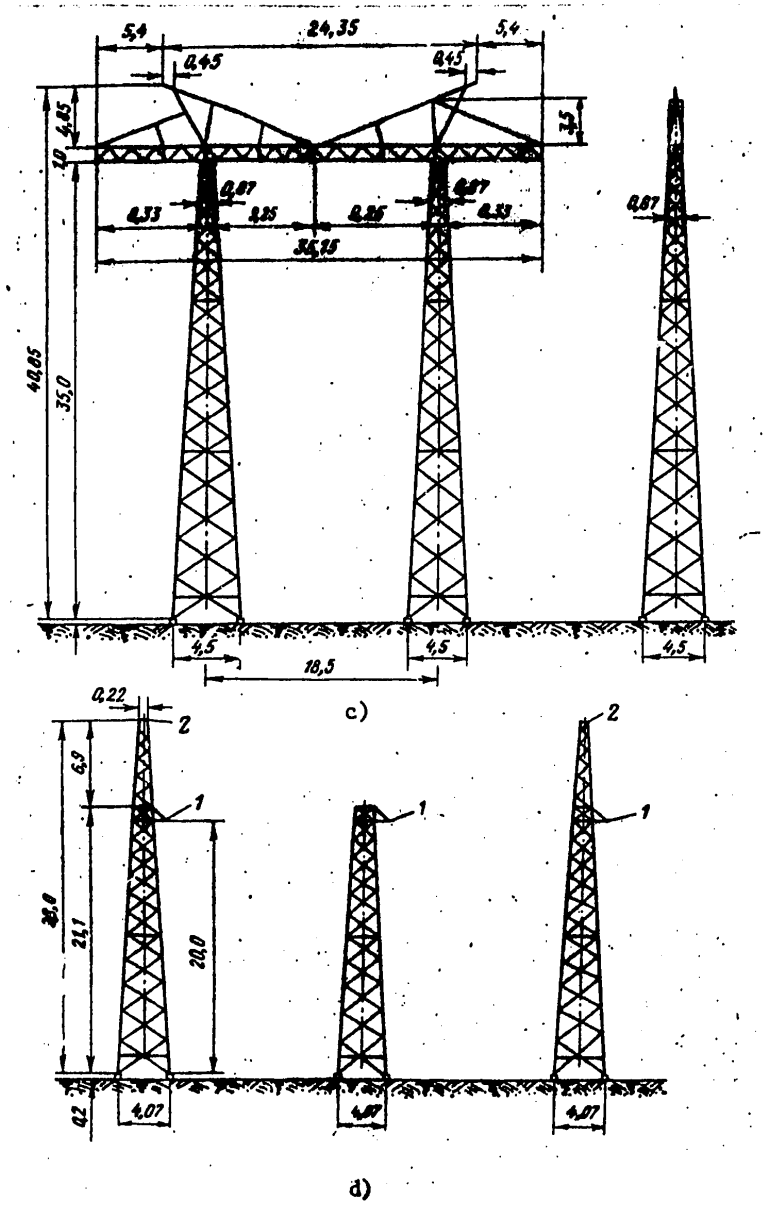

Fig. 4-24. Standard 750-kV Steel Towers

APPROVED FOR RELEASE: 2007/02/08: CIA-RDP82-00850R000300090014-4

APPROVED FOR RELEASE: 2007/02/08: CIA-RDP82-00850R000300090014-4

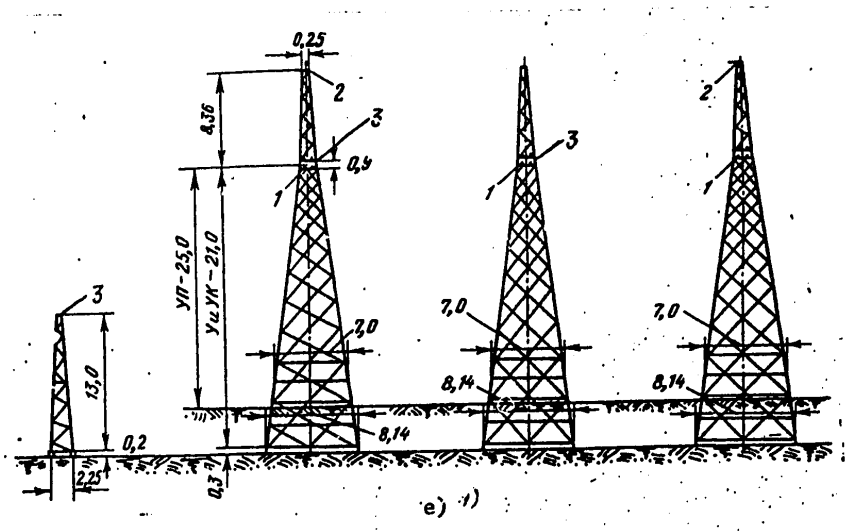

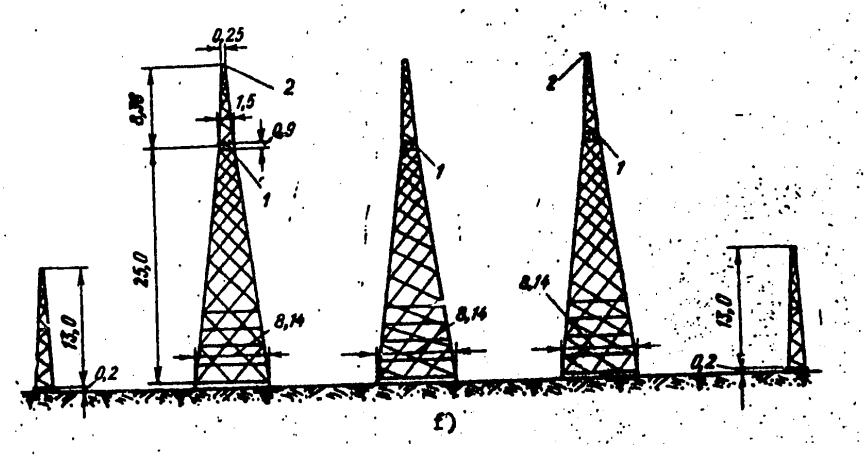

Fig. 4-24. Standard 750-kV Steel Towers

APPROVED FOR RELEASE: 2007/02/08: CIA-RDP82-00850R000300090014-4

APPROVED FOR RELEASE: 2007/02/08: CIA-RDP82-00850R000300090014-4

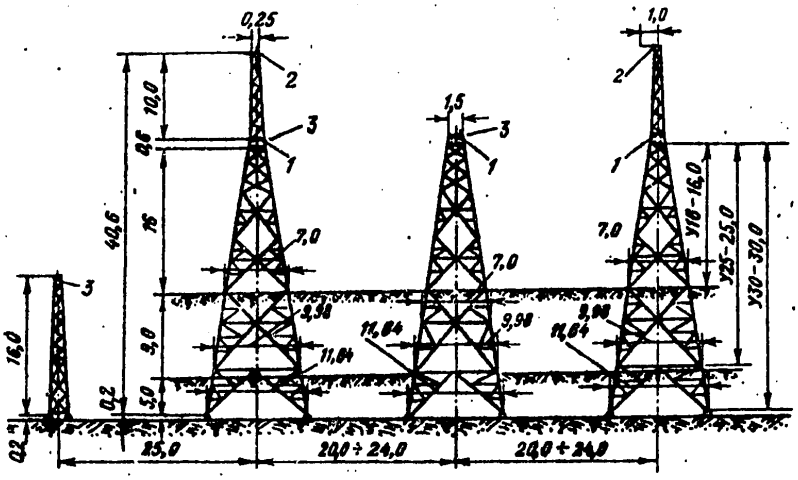

а)

Fig. 4-24. Standard 750-kV Steel Towers

4-4-18. 750-kV Steel Towers

(1) Тип и условное обозначение	(2) Расчетные условия			(6) Длина пролета, м			(10) Масса, т
	(3) Провода / Тросы	(4) Район гололедности	(5) Скоростной напор, кгс/м²	(7) гололедно-ледяного	(8) ветрового	(9) весового	
(11) Промежуточная на оттяжках, ПО-750 (рис. 4-24, а)	4×АСО-600 / АСУС-95/58	II	55	430	430	515	10,5
(12) То же*, ПО (рис. 4-24, б)	4×АСУ-400 / АСУС-70	III IV	65	425 390	425 390	530 485	16,5
(13) Промежуточная свободностоящая портальная повышенная, П-35 (рис. 4-24, в)	4×АСО-600 / АСУС-95/58	II	55	520	520	520	17,5

APPROVED FOR RELEASE: 2007/02/08: CIA-RDP82-00850R000300090014-4

APPROVED FOR RELEASE: 2007/02/08: CIA-RDP82-00850R000300090014-4

4-4-18. Continuation

(1) Тип и условное обозначение	(2) Расчетные условия			(6) Длина пролета, м			(10) Масса, т
	(3) Провода / Тросы	(4) Район гололедности	(5) Скоростной напор, кгс/м²	(7) габаритного	(8) ветрового	(9) весового	
(14) Промежуточная угловая свободностоящая на угол 16°, ПУ-16 (рис. 4-24, г)	4×АСО-600 / АСУС-95/58	II	55	380	300	250	13,0
(15) Анкерная угловая и концевая свободностоящая, трехстоечная на угол до 60°, У, УК (рис. 4-24, д)	4×АСО-600 / АСУС-95/58	II	55	430	500	550	26,5
(16) То же повышенная на 5 м, УП (рис. 4-24, д)	4×АСО-600 / АСУС-95/58	II	55	430	500	550	35,7
(17) То же транспозиционная, УПТ (рис. 4-24, е)	4×АСО-600 / АСУС-95/58	II	55	430	500	550	37,1
(18) Анкерная угловая и концевая свободностоящая трехстоечная на угол до 60°, $АУ_{16}$, высотой 16 м* (рис. 4-24, ж)	4×АСУ-400 / АСУС-70	III IV	65	—	—	—	28,84
(19) То же высотой 25 м*, $АУ_{25}$ (рис. 4-24, ж)	4×АСУ-400 / АСУС-70	III IV	65	—	—	—	45,78
(20) То же высотой 30 м*, $АУ_{30}$ (рис. 4-24, ж)	4×АСУ-400 / АСУС-70	III IV	65	—	—	—	62,04

APPROVED FOR RELEASE: 2007/02/08: CIA-RDP82-00850R000300090014-4

APPROVED FOR RELEASE: 2007/02/08: CIA-RDP82-00850R000300090014-4

Key:
† - Russian Y and C are equivalent to English U and S, respectively
(1) - Type and nomenclature
(2) - Estimated conditions
(3) - Conductors/Cables
(4) - Ice area
(5) - Velocity head, kgs/m^2
(6) - Length of span, m
(7) - Overall span
(8) - Wind span
(9) - Weight span
(10)- Mass, t
(11)- Intermediate on guys, PO-750, fig. 4-24, *a*
(12)- Same, PO, fig. 4-24, *b*
(13)- Intermediate free-standing extended straddle, P-35, fig. 4-24, *c*
(14)- Angle-suspension free-standing with a deflection angle of 16°, PU-16, fig. 4-24, *d*
(15)- Anchor-angle and dead-end three-strut free-standing with a deflection angle of up to 60°, U, UK, fig. 4-24, *e*
(16)- Same, extended by 5 m, UP, fig. 4-24, *e*
(17)- Same, transposition, UPT, fig. 4-24, *f*
(18)- Anchor-angle and dead-end three-strut free-standing with a deflection angle of up to 60°, AU_{16}, height of 16 m*, fig. 4-24, *g*
(19)- Same, height 25 m*, AU_{25}, fig. 4-24, *g*
(20)- Same, height 30 m*, AU_{30}, fig. 4-24, *g*

Notes:

1. Towers developed by the Energoset'proyekt ODP [expansion not provided] for the Konakovo-Moscow 750-kV overhead line.

2. Towers marked with an asterisk were developed for 750-kV overhead lines in the Southern Electric Power System in conjunction with the OPD and the training section of Energoset'proyekt.

3. Tower material is steel--VSt-ZPs and 14G2. Guys are steel cable, 17.0-140-V-SS-N. Steel castings are St-35 1, gr. II.

4. All structural members are galvanized and assembled with bolts.

APPROVED FOR RELEASE: 2007/02/08: CIA-RDP82-00850R000300090014-4

APPROVED FOR RELEASE: 2007/02/08: CIA-RDP82-00850R000300090014-4

FOR OFFICIAL USE ONLY

4-4-19. Volume of Round Timber (Logs) Used for Overhead-Line Towers and Communications Lines, m^3
(State Standard 2708-44*. Revised with changes introduced into the Standard. September 1960)

(1) Диаметр в верхнем отрубе, см	(2) Длина окружности, см	(3) Длина, м														
		2,75	3,25	3,5	4,0	4,5	5,0	5,5	6,0	6,5	7,0	7,5	8,0	8,5	9,0	9,5
14	44	0,047	0,057	0,061	0,073	0,084	0,097	0,110	0,123	0,135	0,150	0,164	0,179	0,195	0,21	0,23
15	47	0,054	0,066	0,072	0,084	0,097	0,110	0,125	0,140	0,154	0,169	0,185	0,20	0,22	0,24	0,25
16	50	0,063	0,075	0,082	0,095	0,110	0,124	0,140	0,155	0,172	0,189	0,20	0,22	0,24	0,26	0,28
17	53,5	0,072	0,086	0,093	0,107	0,124	0,140	0,158	0,175	0,192	0,21	0,23	0,25	0,27	0,29	0,31
18	57	0,079	0,095	0,103	0,120	0,138	0,156	0,175	0,194	0,21	0,23	0,25	0,28	0,30	0,32	0,35
19	60	0,088	0,106	0,114	0,133	0,153	0,174	0,194	0,21	0,23	0,26	0,28	0,30	0,33	0,36	0,38
20	63	0,097	0,116	0,126	0,147	0,170	0,190	0,21	0,23	0,26	0,28	0,30	0,33	0,36	0,39	0,42
21	66	0,107	0,129	0,140	0,163	0,186	0,21	0,23	0,26	0,28	0,31	0,33	0,36	0,40	0,42	0,46
22	69	0,118	0,143	0,154	0,178	0,20	0,23	0,25	0,28	0,31	0,34	0,37	0,40	0,43	0,46	0,50
23	72,5	0,130	0,157	0,169	0,195	0,22	0,25	0,28	0,31	0,34	0,37	0,40	0,43	0,47	0,51	0,54
24	75,5	0,143	0,170	0,184	0,21	0,24	0,27	0,30	0,33	0,36	0,40	0,43	0,47	0,50	0,55	0,58
25	79	0,157	0,186	0,20	0,23	0,26	0,29	0,32	0,36	0,39	0,43	0,47	0,50	0,54	0,59	0,63
26	82	0,169	0,20	0,21	0,25	0,28	0,32	0,35	0,39	0,43	0,46	0,50	0,54	0,58	0,63	0,67
27	85	0,183	0,21	0,23	0,27	0,30	0,34	0,38	0,42	0,46	0,50	0,54	0,58	0,63	0,68	0,73
28	88	0,198	0,23	0,25	0,29	0,33	0,37	0,41	0,45	0,49	0,53	0,58	0,63	0,67	0,72	0,78
29	91,5	0,21	0,25	0,27	0,31	0,35	0,39	0,44	0,48	0,53	0,58	0,62	0,67	0,72	0,78	0,83
30	94,5	0,23	0,27	0,29	0,33	0,38	0,42	0,47	0,52	0,56	0,61	0,66	0,72	0,78	0,83	0,89
31	97,5	0,24	0,29	0,31	0,36	0,40	0,45	0,50	0,55	0,60	0,66	0,71	0,77	0,83	0,88	0,95
32	101	0,25	0,30	0,33	0,38	0,43	0,48	0,53	0,59	0,64	0,70	0,76	0,82	0,88	0,94	1,00
33	104	0,27	0,32	0,35	0,40	0,46	0,51	0,57	0,62	0,68	0,74	0,80	0,87	0,93	1,00	1,07
34	107	0,29	0,34	0,37	0,43	0,49	0,54	0,60	0,66	0,72	0,78	0,85	0,92	0,98	1,06	1,13
35	110	0,31	0,36	0,39	0,45	0,51	0,57	0,63	0,70	0,76	0,83	0,90	0,96	1,04	1,12	1,20
36	112,5	0,33	0,39	0,42	0,48	0,54	0,60	0,67	0,74	0,80	0,88	0,95	1,02	1,10	1,18	1,26

Key:
(1)- Diameter in upper log, cm
(2)- Circumference, cm
(3)- Length, m

FOR OFFICIAL USE ONLY

APPROVED FOR RELEASE: 2007/02/08: CIA-RDP82-00850R000300090014-4

APPROVED FOR RELEASE: 2007/02/08: CIA-RDP82-00850R000300090014-4

Notes:

1. The volume of long timber (11; 13 m and more) is calculated as the sum of the volumes of the cuts indicated in this table. The long timber is divided into two or three equal-length cuts.

COPYRIGHT: Izdatel'stvo "Energiya", 1974

9512
CSO: 8144/300

END

APPROVED FOR RELEASE: 2007/02/08: CIA-RDP82-00850R000300090014-4