Sanitized Copy Approved for Release 2010/10/19 : CIA-RDP85T00840R000101130001-2

NATIONAL PHOTOGRAPHIC INTERPRETATION CENTER

Top Secret

25X1

Soviet Mobile Missile Activity
1 October–31 December 1984
Summary Report 26 (S)

DEPLOYED STRATEGIC SSM FACILITIES
BE: Various
USSR

113

Basic Imagery Interpretation Report

Top Secret

25X1

RCA-01/0001/85
FEBRUARY 1985
Copy 68

Sanitized Copy Approved for Release 2010/10/19 : CIA-RDP85T00840R000101130001-2

Sanitized Copy Approved for Release 2010/10/19 : CIA-RDP85T00840R000101130001-2

Page Denied

Sanitized Copy Approved for Release 2010/10/19 : CIA-RDP85T00840R000101130001-2

Sanitized Copy Approved for Release 2010/10/19 : CIA-RDP85T00840R000101130001-2

SOVIET MOBILE MISSILE ACTIVITY
1 OCTOBER–31 DECEMBER 1984
SUMMARY REPORT 26 (S)

PREFACE

i. This is the 26th in a series of quarterly reports prepared by NPIC on Soviet activities relevant to development and deployment of Soviet offensive mobile missile systems judged to be of strategic interest. (S/WN)

ii. The report has five substantive sections—Highlights and Late Developments, ICBM Activity, IRBM Activity, SRBM Activity, and Related Activity. The Related Activity section provides information on facilities or unidentified activities which may have a potential mobile missile association. This report also includes an appendix that contains significant baseline information related to Soviet mobile missile systems. A list of acronyms and abbreviations also appears in the appendix. (S/WN)

iii. Information in this report covers the period from 1 October through 31 December 1984. It was derived primarily from the analysis of [redacted] 25X1
[redacted] Significant activity identified after the cutoff date has also been 25X1
included under Late Developments found in the Highlights and Late Developments section. This report updates the preceding mobile missile summary report: [redacted] RCA-01/0017/84, *Soviet Mobile Missile Activity, 1 July–30 September 1984, Summary Report 25 (S)*, November 1984 (TOP SECRET 25X1
[redacted] 25X1

iv. Comments and queries regarding this report are welcome. They may be directed to the NPIC Mobile Missile Coordinator, [redacted] or to the Assistant NPIC Mobile Missile Coordinator, [redacted] 25X1
[redacted] Queries may also be directed to the contributing analysts 25X1
identified in the appendix. If you would like to change the number of copies you receive or have any other questions regarding distribution, please also call. (C)

25X1

Reverse side blank

Sanitized Copy Approved for Release 2010/10/19 : CIA-RDP85T00840R000101130001-2

Sanitized Copy Approved for Release 2010/10/19 : CIA-RDP85T00840R000101130001-2

Highlights and Late Developments

Sanitized Copy Approved for Release 2010/10/19 : CIA-RDP85T00840R000101130001-2

Sanitized Copy Approved for Release 2010/10/19 : CIA-RDP85T00840R000101130001-2

SECRET/WNINTEL

FIGURE 1. LOCATIONS OF SOVIET MOBILE MISSILE ACTIVITY HIGHLIGHTS

Sanitized Copy Approved for Release 2010/10/19 : CIA-RDP85T00840R000101130001-2

Sanitized Copy Approved for Release 2010/10/19 : CIA-RDP85T00840R000101130001-2

25X1
25X1

HIGHLIGHTS

1. Highlights of this reporting period are summarized below (Figure 1):

	Paragraph(s)	Figure
ICBMs		
• Probable first launch of an SS-X-25 was made from a type C single-bay garage at Plesetsk.	5	
• Missile support equipment for the SS-X-25 was identified at Plesetsk.	7	
• A probable C3 railcar probably for the rail-mobile SS-X-24 was identified at Plesetsk LTS 28.	12	4
• The exterior of Yoshkar-Ola Mobile Missile Base 1 was completed.	19	5
IRBMs		
• SS-20 mobile missile bases were identified under construction at Korosten, Zhitomir, and Kansk.	34, 36, 58	15
• A probable major C3 upgrade was in progress at Mozyr.	38	
• Initial dismantlement had begun of the Yurya Mobile IRBM Base 4, the last IRBM base in the Yurya complex.	52	
• The second KY-15 was launched from Kapustin Yar.	81	
• Distinctive differences between the KY-15 and SS-20 missile canisters were identified.	82	25
• A probable SS-20 TEL was involved in an accident at Kapustin Yar.	94	27

25X1

25X1

25X1

Sanitized Copy Approved for Release 2010/10/19 : CIA-RDP85T00840R000101130001-2

Sanitized Copy Approved for Release 2010/10/19 : CIA-RDP85T00840R000101130001-2

25X1
25X1

LATE DEVELOPMENTS

Akhtyrka

- By [redacted] Akhtyrka Mobile IRBM Base 1 was probably complete (Figure LD-1). The C3 area was externally complete, as was the visible portion of the operations area; two of the nine SBGs were terrain masked. Two net-covered probable SS-20-associated vehicles were also in the C3 area. In related activity, the MSVs in storage at Lebedin Mobile IRBM Base 1 had departed by [redacted] The equipment was probably destined for Akhtyrka Mobile IRBM Base 1. [redacted] 25X1 25X1 25X1 25X1

[redacted] 25X1

Novosibirsk

- Two FINE PAIR (proposed name) antennas were deployed at Novosibirsk SSM Complex on [redacted] One FINE PAIR was with a C3 unit at Novosibirsk FTA/R 001, and the other was in the operations area of Novosibirsk Mobile IRBM Base 5. This is the first identification of a simultaneous deployment of the FINE PAIR and suggests that a relay line had been established between the two locations. [redacted] 25X1 25X1 25X1

[redacted] 25X1 25X1

Sanitized Copy Approved for Release 2010/10/19 : CIA-RDP85T00840R000101130001-2

Sanitized Copy Approved for Release 2010/10/19 : CIA-RDP85T00840R000101130001-2

Intercontinental Ballistic Missile Activity

Sanitized Copy Approved for Release 2010/10/19 : CIA-RDP85T00840R000101130001-2

Sanitized Copy Approved for Release 2010/10/19 : CIA-RDP85T00840R000101130001-2

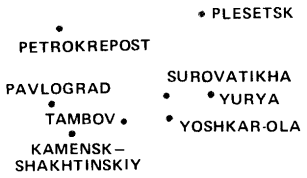

SECRET/WNINTEL

FIGURE 2. LOCATIONS OF SOVIET MOBILE ICBM-ASSOCIATED FACILITIES

Sanitized Copy Approved for Release 2010/10/19 : CIA-RDP85T00840R000101130001-2

Sanitized Copy Approved for Release 2010/10/19 : CIA-RDP85T00840R000101130001-2

INTERCONTINENTAL BALLISTIC MISSILE ACTIVITY

Introduction

2. This section of the report addresses activity related to the production, development, and deployment of mobile intercontinental ballistic missiles (Figure 2). Discussion covers the first probable launch of an SS-X-25 from a type C single-bay garage and possible final testing prior to deployment; further preparation and testing of the SS-X-24, including probable rail-TEL launches and identification of a C3-related railcar; a new probable driver/dispersal training area (DDTA) near the Plesetsk Complex DDTA with silo-based SS-X-24 equipment present; and an update of construction at the ICBM-associated solid motor production facilities at Kamensk-Shakhtinskiy and Pavlograd. (S/WN)

Development and Testing

Plesetsk MSTC

3. **Mobile Missile-Associated Facilities.** All four mobile ICBM bases at Plesetsk (MOB 1, MOB 2, LTS 5, and LTS 6; Figure 3) and all 42 launch reference positions (LRPs) were observed at least once. The bases continue to be occupied as evidenced by the clearing of snow during winter months and by the occasional observation of personnel, vehicle tracks, and facility maintenance. No mobile missile-associated vehicles were identified at any of the bases. In addition, the three driver/dispersal training areas—the DDTA near MOB 1, the newly identified DDTA, and the complex DDTA near LTS 16—were imaged. (S/WN)

4. **Mobile Missile Base 1.** Initial snow removal for the 1984–1985 winter was observed on [redacted] 25X1
[redacted] 25X1 Rectangular areas were cleared in front of three launch reference positions, indicating a continued interest by the Soviets in maintaining access to the launch reference positions. (S/WN)

5. **SS-X-25 Activity.** Four SS-X-25 ICBMs were launched during the reporting period for a total of ten tests (nine successful) during 1984 and a total of 15 tests (13 successful) since the flight test program began in February 1983 (Table 1). No prelaunch or postlaunch imagery of activity related to the unsuccessful [redacted] (DEFSMAC S/DQ/893-84 [S]) flight test was acquired; therefore, its launch point and launch mode cannot be determined from imagery. The launch on [redacted] 25X1
[redacted] (DEFSMAC S/DQ/1036-84 [S]) was a success and may have been the first from the type C single-bay garage at Plesetsk ICBM Launch Test Site (LTS) 23. On [redacted] long 25X1
probable missile support van (MSV) draped with winter camouflage material was in front of the single-bay garage and cable connected to it. This was the first identification of any missile support equipment for the SS-X-25 at Plesetsk. Much of the snow atop the forward section of the single-bay garage was melted, which suggests that a transporter-erector-launcher (TEL) may have been inside. A MAZ-543 cargo truck carrying a possible shroud/training device and two support vehicles were on the silo apron turnaround at collocated LTS 24. Similar activity had been previously observed at LTS 24 during March 1984. (S/WN)

6. On [redacted] DEFSMAC reported the 25X1
launch of two SS-X-25s from Plesetsk. Both missiles flew to a broad-ocean impact area (DEFSMAC S/DQ/1079-84 [S] and S/DQ/1080-84 [S]). This was the first dual launch of the SS-X-25 and the first test of the missile to a broad-ocean impact area. Testing of an ICBM system to the area previously has been one of the last milestones prior to initial deployment of the missile system. On [redacted] 25X1
[redacted] postlaunch imagery of LTS 23 and LTS 24 25X1

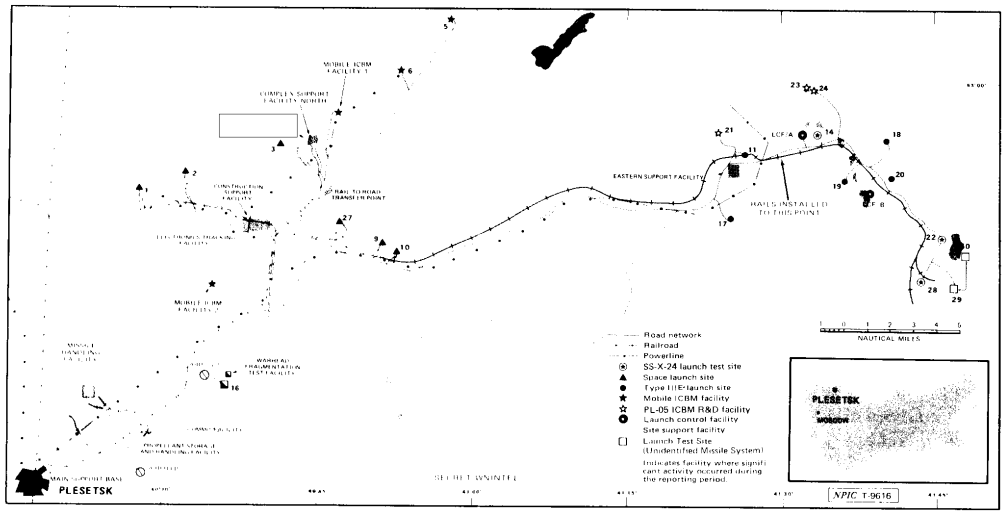

FIGURE 3. PLESETSK MISSILE AND SPACE TEST CENTER

Sanitized Copy Approved for Release 2010/10/19 : CIA-RDP85T00840R000101130001-2

Sanitized Copy Approved for Release 2010/10/19 : CIA-RDP85T00840R000101130001-2

Table 1.
SS-X-25 Launch Summary

Launch Date*	Launch Site (mode)**	Remarks*
[redacted]	LTS 23 (silo)	Success
	LTS 23 (silo)	Success
	LTS 23 (silo)	Success
	LTS 23 (TEL)	Failure
	Unknown***	Success
	LTS 23 (TEL)	Success
	LTS 23 (TEL)	Success
	LTS 23 (TEL)	Success
	LTS 23 (TEL)	Success†
	Unknown***	Success
	LTS 24 (TEL)	Success††
	Unknown**	Failure
	LTS 23 (TEL)	Success†††
	LTS 23/24 (TEL)	Success‡
	LTS 23/24 (TEL)	Success‡

[redacted]
**Derived from imagery
***No imagery was acquired that revealed prelaunch or post-launch activity at either LTS 23 or LTS 24.
†First reduced-range test
††This was the first launch of an SS-X-25 from LTS 24.
†††Prelaunch activity at LTS 23 on [redacted] ndicated that this was probably the first missile launched from a TEL within the type C SBG.
‡First dual launch; first test to a broad-ocean area
This table is classified SECRET/WNINTEL.

indicated one missile was probably launched from each LTS. Both silo doors were open, no camouflaged equipment was present, and no evidence of a launch (burnmarks, blast effects, or pockmarks in the snow) was identified at either LTS. However, at LTS 23, snow was cleared/melted in front of the type C single-bay garage in about the same position the missile support van had occupied on [redacted] before the [redacted] launch. This suggests that the missile tested from LTS 23 was probably launched from a transporter-erector-launcher (TEL) within the single-bay garage. At LTS 24, snow was cleared/melted in about the same position the camouflaged equipment had occupied on [redacted] before the launch on that date. This suggests that the missile tested from LTS 24 was launched from a TEL on the silo apron. It should be noted that because of effective camouflage, concealment, and deception (CC&D) practices at Plesetsk, the TEL and missile canister for the SS-X-25 still have not been identified. (TSR)

7. **LTS 16.** On [redacted] four missile support vans (MSVs)—two [redacted] MSVs and two [redacted] MSVs—were within the former warhead fragmentation test area at LTS 16. All four MSVs were covered with winter camouflage material. This was the first observation of mobile missile-associated equipment at LTS 16 since April 1974 when two probable SS-16 TELs were present. [redacted]

8. **Missile Handling Facility.** Construction in the modified SS-16/SS-X-25 receiving, inspection, and checkout (RIC) area in support of the SS-X-25 continued. The roof has been installed on the first type C single-bay garage, and it appears to be externally complete. Only the footings for the second type C single-bay garage have been installed. These garages will probably be used for training personnel to handle SS-X-25 TELs and support equipment. Wall panels and roof sections also have been installed on the east bay of the new probable clerestory building under construction in the northwest section of the facility. No payload-associated crates were identified during this reporting period. (S/WN) 25X1

9. **New Probable Driver/Dispersal Training Area.** A new probable driver/dispersal training area (DDTA) was identified during the reporting period. The new DDTA was constructed between August 1983 and September 1984 and is approximately 4.5 nm northeast of Plesetsk Complex DDTA. Access to this new area is via an improved road that extends from 62-50-25N 040-42-20E to 62-48-30N 040-48-50E, a distance of approximately 5 nm. The improved road ends in a loop turnaround, and two graded loops and a partially completed loop extend from the main road. The center graded loop has been widened and contains three drive-in revetments (one for a large vehicle), one large drive-through revetment, and a rectangular structure just northwest of the revetments. On [redacted] an SS-X-24 silo loader with prime mover and a prime mover for an SS-X-24 missile canister transporter were in the new DDTA. This was the first identification of silo-based SS-X-24 equipment participating in dispersal training activities. The new probable DDTA will probably be used for training silo-based SS-X-24 crews and also could support road-mobile SS-X-25 training. (S/WN) 25X1 25X1 25X1

10. **SS-X-24-Associated Activity.** Four successful SS-X-24 launches occurred during the reporting period, all from unknown locations and launch modes (Table 2). A total of 10 SS-X-24s were launched in 1984: two from silos, four probably from a rail-mobile launcher, and four from unknown locations and launch modes. Seventeen SS-X-24s have been launched since the flight test program began in October 1982. The launches during the reporting period occurred on [redacted] (DEFSMAC S/DQ/950-84 [S], S/DQ/994-84 [S], S/DQ/1096-84 [S], and S/DQ/1149-84 [S] respectively). [redacted] 25X1 25X1 25X1 25X1 25X1 25X1 25X1 25X1

11. **Rail-Mobile SS-X-24-Associated Activity.** Construction of the fourth probable rail-mobile launch test position in the rail-mobile SS-X-24 launch test facility at LTS 28 was completed during the reporting period. Prefabricated sections of track and possible azimuth alignment equipment were installed during September and October. Both of the spurs that straddle the buried rail-mobile launch control building now appear to be the same length, and each spur now has two launch test positions. [redacted] 25X1 25X1 25X1 25X1

[redacted] 25X1 25X1

Sanitized Copy Approved for Release 2010/10/19 : CIA-RDP85T00840R000101130001-2

Sanitized Copy Approved for Release 2010/10/19 : CIA-RDP85T00840R000101130001-2

25X1
25X1

12. Analysis of a railcar at the rail-mobile launch test facility at LTS 28 and at the rail-mobile missile receiving and checkout area (MRACA) at the missile handling facility indicates that it is a probable C3 railcar, probably related to the rail-mobile SS-X-24 (Figure 4). The probable C3 railcar is about 24 meters long, 3 meters wide, and has 11 roof vents (10 in a row along one side and one on the opposite side). The railcar is identifiable by an approximately 3 meters square recessed area on the roof at one end of the railcar. A probable retractable antenna mast/pedestal extends from a light-toned circular object centered in the recessed area. This railcar has been at the rangehead since at least early 1984 and has been in the rail-mobile launch test facility at LTS 28 before rail-mobile SS-X-24 launches and in the rail-mobile MRACA between rail-mobile launches. [redacted]

13. **Rail-Mobile SS-X-24 Missile Receiving and Checkout Area.** Construction in this area continued. Significant observations and activity during the reporting period included the probable expansion of the facility; the completion of the rail line to the four-bay interim missile storage building; the first identification of a probable 24-meter-long railcar in front of the four-bay interim missile storage building; the completion of a probable support building just north of the new, large rail-served building; the completion of a 96-meter-long rail-in shed (previously reported as 102 meters long) near the new building; and the identification of a probable C3-related railcar on the spurs near the missile receiving and checkout building during periods between rail-mobile SS-X-24 launches. (TSR)

14. The rail-mobile missile receiving and checkout area has probably been undergoing expansion since August. By [redacted] a new, probably rail-served, high-bay building (over 70 meters long) was in the early stages of construction approximately 200 meters southeast of the rail-mobile missile receiving and checkout area. A rail spur (which probably will be concealed by a 160-meter-long, rail-through shed) was constructed from the midpoint of the rail-mobile missile receiving and checkout area to the southeast section of the new area that contains the probable high-bay building. Three other rail spurs are currently under construction in this new area. One or two will extend through the new building, and at least one will extend along the south side of the new building. All three spurs will probably join and terminate in a single rail spur just past the probable

25X1
25X1
25X1

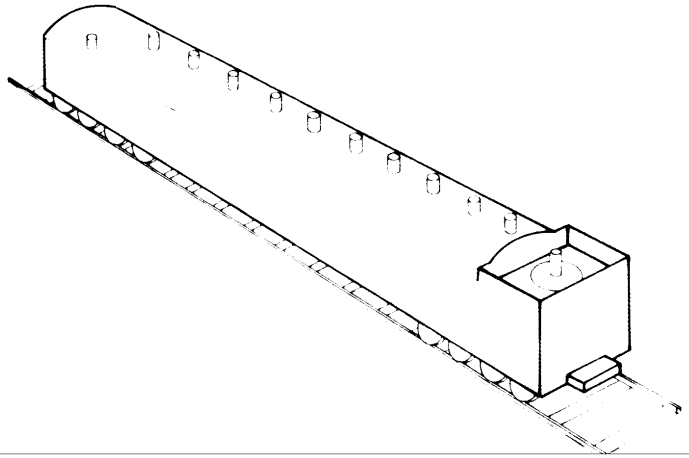

[redacted]

25X1

25X1
25X1

Sanitized Copy Approved for Release 2010/10/19 : CIA-RDP85T00840R000101130001-2

Sanitized Copy Approved for Release 2010/10/19 : CIA-RDP85T00840R000101130001-2

25X1
25X1

25X1

25X1

Table 2.
SS-X-24 Launch Summary

Launch Date*	Launch Site (mode)**	Remarks*
	LTS 28A (silo)	Failure
	LTS 22 (silo)	Failure***
	LTS 28A (silo)	Failure
	LTS 22 (silo)	Failure
	LTS 28A (silo)	Failure
	LTS 22 (silo)	Success
	LTS 28A (silo)	Success
	LTS 22 (silo)	Success
	LTS 22 (silo)	Failure
	LTS 28 (rail-TEL)	Failure
	LTS 28 (rail-TEL)	Success
	LTS 28 (rail-TEL)	Success†
	LTS 28 (rail-TEL)	Success††
	Unknown	Success†††
	Unknown	Success†††
	Unknown	Success†††
	Unknown	Success†††

**Derived from imagery
***Although the payload impacted on the Kamchatka Peninsula, the postboost vehicle apparently did not function properly.
†Possible rail-TEL identified on
††Probable rail-mobile C3 railcar identified on
†††No imagery acquired of prelaunch activity or evidence of a launch
This table is classified TOP SECRET RUFF

high-bay building. Because of the new probable rail-spur pattern, this construction probably represents an expansion of the existing rail-mobile missile receiving and checkout area and not a new missile receiving and checkout area. It cannot be determined whether the expansion of the rail-mobile missile receiving and checkout area is in support of crew training for the rail-mobile SS-X-24 or another missile system. (S/WN)

15. **SS-13 Receiving, Inspection and Checkout Area.** Construction of the new rail-served area north of the SS-13 receiving, inspection, and checkout area continued. By the end of the reporting period, the roofs for the high-bay and the low-bay sections of the building were being installed, and rail service through the SS-13 area was completed. The function of this area has not been determined, but it probably is not being constructed to support SS-13 operations. Because of location, this rail-served structure does not appear to be related to the new, probably rail-served, high-bay building. (S/WN)

16. **Rail Line Construction at Plesetsk.** No new construction was observed at this rail line, and the terminus of the extension remains about 0.25 nm past LTS 28. (S/WN)

17. **Launch Control Facility B.** No new rail-mobile SS-X-24 activity was identified at this facility. (S/WN)

Table 3.
Ballistic Missile Canister Identification Summary

Missile System	First Flight Test	First Canister Identified	Location
SS-16	Mar 72	Jul 72	Plesetsk MSTC MHF and LTS 5
SS-17	Sep 72	Aug 72*	Tyuratam MSTC LTS V1 (then LTS S6)
SS-18	Oct 72	May 73**	Tyuratam MSTC LTS R8 and LTS R11
SS-19	Apr 73	Apr 73	Tyuratam MSTC LTS G5/6
SS-20	Sep 74	Sep 74	Kapustin Yar MSTC Cmplx C LTS 1
SS-X-24	Oct 82	None yet	
SS-X-25	Feb 83	None yet	
KY-15	Sep 84	Sep 84	Kapustin Yar MSTC Cmplx C LTS 1

*This canister was observed during the probable initial loading of this silo about a month before the first flight test of an SS-17.
**At least a section of this missile canister was identified during April 1972 at Tyuratam MSTC LTS H1/2 during the pop up/LAD test phase of the flight test program. Although the identification at that time was tentative, the lack of confidence in the identification was due to poor image interpretability, not Soviet CC&D practices.
This table is classified SECRET/WNINTEL.

25X1
25X1
25X1

Deployment

25X1

Yoshkar-Ola SSM Complex

19. **Mobile Missile Base 1.** Construction of this base, which is probably intended for deploy-

25X1
25X1

Sanitized Copy Approved for Release 2010/10/19 : CIA-RDP85T00840R000101130001-2

Sanitized Copy Approved for Release 2010/10/19 : CIA-RDP85T00840R000101130001-2

 25X1
25X1

25X1

ment of the SS-X-25 mobile ICBM, was completed by [redacted] (Figure 5). On that date, the nine single-bay garages, the three seven-bay garages, and the command, control, and communications (C3) area were externally complete. The C3 area consisted of one ten-bay garage and a rectangular three-story C3 building with a roof-mounted antenna array. This C3 area has the same appearance as regimental C3 facilities at existing IRBM bases. However, the lattice towers usually observed near SS-20 regimental C3 facilities could not be identified due to tree cover. If a mobile missile system other than the SS-20 is deployed at this base, then the Strategic Rocket Forces (SRF) apparently will continue to use an already proven command and control system. Also, two new barracks and a quonset-type building were constructed in the housing and administration area. (S/WN)

20. **Division Command Post Bunker.** The control bunker at Yoshkar-Ola ICBM Division Command Post Bunker was being excavated during the reporting period. By [redacted] the excavation at the west end of the control bunker had been filled, but excavating continued at the east end of the bunker. Bunkers have been excavated at other SRF divisions where mobile missiles have been deployed and probably involve C3 upgrading related to the deployment of mobile missile systems. (S/WN)

21. On [redacted] a new antenna was identified on top of the Division Command Post Bunker. Construction of a rectangular building on the south side of the facility, which began in early 1983, was continuing at a slow pace. No activity was observed at the personnel bunker, which had been unearthed in August, on the northern side of the command post. (S/WN) 25X1

22. **Yoshkar-Ola RTP.** A probable SS-X-25 transshipment area was under construction in the receiving area of the RTP by mid-October. This separately secured area consists of a rail-served, ground support equipment transfer shed, [redacted] that will conceal the transfer of missile-associated equipment. The construction of this new transshipment area, in addition to the recent completion of Yoshkar-Ola Mobile Missile Base 1, indicates preparations for initial deployment of the SS-X-25 may be in progress. (S/WN) 25X1 25X1

Yurya SSM Complex

23. **Mobile Missile Base 6.** Construction continued at this mobile missile base throughout the quarter. By [redacted] one type C single-bay garage was complete; foundations were present for five single-bay garages, and clearings were present for three single-bay garages. Three seven-bay garages were in a late stage of construction, and modifications were continuing on the west missile-ready bunker. By [redacted] all of the single-bay garages and seven-bay garages were complete (Figure 6). Open cable trenches and construction equipment were still evident in the operations area, however, and the tents in the construction support camp were still present. A probable C3 facility was in an early stage of construction near the operations area. (S/WN) 25X1 25X1 25X1 25X1

25X1

 25X1

Sanitized Copy Approved for Release 2010/10/19 : CIA-RDP85T00840R000101130001-2

Sanitized Copy Approved for Release 2010/10/19 : CIA-RDP85T00840R000101130001-2

[redacted] 25X1

Production

[redacted]

Kamensk-Shakhtinskiy

24. At Kamensk-Shakhtinskiy Solid Motor Production Plant, construction continued in the expansion area. The large fabrication-type building was externally complete and will be served by at least one rail spur. Construction of a possible casting building was started on one of the two areas of ground preparation reported in the last reporting period. The heavy-walled construction of this building and the fact that a large portion of it will be below ground level indicate that it may be used for casting motors. Two rail spurs that will serve the new building are under construction. Ground preparations for at least one additional building were started during the period. Kamensk-Shakhtinskiy is involved in various stages of strategic rocket motor production, including production of SS-X-25 motors. (S/WN)

Petrokrepost

25. At Petrokrepost Explosive and Solid Motor Plant Morozov, modification to two casting/curing buildings and ground preparation for a possible curing building were underway on [redacted] 25X1 25X1 The modifications to the casting/curing buildings include the reconfiguration of the revetments to accommodate new tunneled rail access points to the buildings. The new rail access points will provide a more efficient way of transporting motors, motor cases, and propellant to the buildings from other areas of the plant. Ground clearing preparations for a possible curing building were started; construction materials were stockpiled nearby. This new construction will supplement a major construction effort, begun in 1979, to increase the solid motor production capabilities at the plant. Since then, new buildings have been started including a case preparation building, an ingredients preparation building, a finishing building, and a mixing building; all are in various stages of construction. (S/WN)

26. The steady increase in building construction in the composite motor production area since 1979 suggests that new solid propellant motors probably will be in series production at the plant, possibly as early as 1986. Petrokrepost previously has been involved in the filling of SS-16/-20 upper-stage motor cases with solid propellant. The modified and new facilities at Petrokrepost could support the production of motors for the SS-X-25 ICBM and/or the KY-15 IRBM. (S/WN)

Sanitized Copy Approved for Release 2010/10/19 : CIA-RDP85T00840R000101130001-2

Sanitized Copy Approved for Release 2010/10/19 : CIA-RDP85T00840R000101130001-2

25X1
25X1

Pavlograd

27. At Pavlograd Solid Motor Production Plant, the only usable coverage of the solid motor production plant was acquired in early October at the beginning of the reporting period. This precluded the monitoring of construction at the new solid motor production line. (S/WN)

28. At Pavlograd Solid Motor Assembly and Test Support Facility, the new building program, which was resumed and expanded in early 1983, continued during the reporting period. The building program includes a new final assembly building, an addition to an assembly building, and two new assembly-associated buildings within the main portion of the facility. It also includes construction along the northeastern boundary of the facility of a new area, which contains roadbeds for a concrete road and two probable rail spurs. Clearing and ground preparations for the construction of two possible missile assembly buildings are also underway in the new area. The building program may be for the production of an SS-X-24 follow-on and/or for production of a new missile system. (S/WN)

- [redacted]
- [redacted]

Missile Support Rear Depots

29. **Tambov.** Tree clearing and grading for at least one new building were started near the open transshipment yard in the eastern part of Tambov Missile Support Rear Depot (MSRD), and the new rail spur in the open transshipment yard was completed. The two new missile storage buildings have been externally completed and should be ready for missile storage in early to mid-1985. (S/WN)

30. **Surovatikha.** Construction continued on the new missile receiving and storage area at Surovatikha Missile Support Rear Depot. This construction, as well as the ongoing construction at Tambov MSRD, may be related to the storage of the SS-X-24 and/or the SS-X-25. (S/WN)

Reverse side blank

25X1
25X1

Sanitized Copy Approved for Release 2010/10/19 : CIA-RDP85T00840R000101130001-2

Sanitized Copy Approved for Release 2010/10/19 : CIA-RDP85T00840R000101130001-2

Intermediate-Range Ballistic Missile Activity

Sanitized Copy Approved for Release 2010/10/19 : CIA-RDP85T00840R000101130001-2

Sanitized Copy Approved for Release 2010/10/19 : CIA-RDP85T00840R000101130001-2

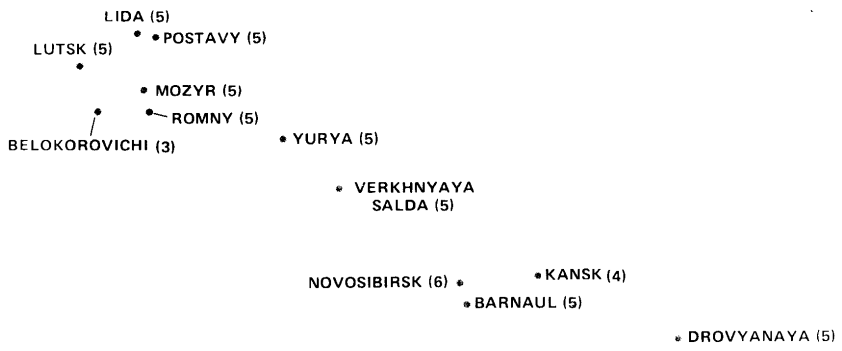

SECRET/WNINTEL

FIGURE 7. LOCATIONS AND NUMBER OF MOBILE IRBM BASES BY DIVISION

SECRET/WNINTEL

FIGURE 8. LOCATIONS OF SOVIET MOBILE IRBM-ASSOCIATED FACILITIES

Sanitized Copy Approved for Release 2010/10/19 : CIA-RDP85T00840R000101130001-2

Sanitized Copy Approved for Release 2010/10/19 : CIA-RDP85T00840R000101130001-2

25X1
25X1

INTERMEDIATE-RANGE BALLISTIC MISSILE ACTIVITY

Introduction

31. This section of the report addresses activity identified during this reporting period regarding significant deployment, production, and development of mobile IRBMs (Figures 7 and 8). It includes information on newly identified mobile IRBM bases at Zhitomir, Korosten, and Kansk; the continuing dismantlement of single-bay garages at mobile IRBM bases in the Yurya complex; activity at the Yurya RTP; continued flight testing of the KY-15; and the identification of a uniquely configured missile canister at Kapustin Yar. Also provided is a summary of significant activity observed at deployed bases, field training areas, and testing and production facilities. Tables summarizing field training areas, mobile missile base construction, and C3 activity can be found in the appendix. (S/WN)

Deployment

32. The identification of three new SS-20 bases during this quarter brought to 15 the number of new SS-20 bases identified during 1984 (Figure 9). Five of these 15 new bases became operational during the quarter (Krolevets Mobile IRBM Base 2, Akhtyrka Mobile IRBM Base 2, Brody Mobile IRBM Base 1, Barnaul Mobile IRBM Base 5, and Kansk Mobile IRBM Base 3); a total of six bases became operational in 1984. Of the 15 new bases identified during 1984, 12 were west of the Ural Mountains in the western USSR, and only three were in the eastern USSR. However, the six bases that achieved operational status in 1984 were divided evenly between the western and eastern portions of the country. (S/WN)

33. The Soviets appear to be stabilizing their divisional structure at five IRBM regiments per division. Four of the SS-20 divisions in the western USSR now contain five bases; a fifth western division (Belokorovichi) contains four bases and one suspect site; a sixth western division (Lida) contains five bases. Resubordination of the two mobile bases in the nearby Pruzhany Division complemented the existing three bases. This resubordination has the additional affect of placing the two Pruzhany Division bases in a division with a nuclear payload handling facility, a type of facility absent from the Pruzhany Division but present in every other SS-20 division. With the exception of the Novosibirsk Division, which contains six bases, the remaining SS-20 divisions contain enough bases and/or suspect sites to conform to the five-base pattern. (S/WN)

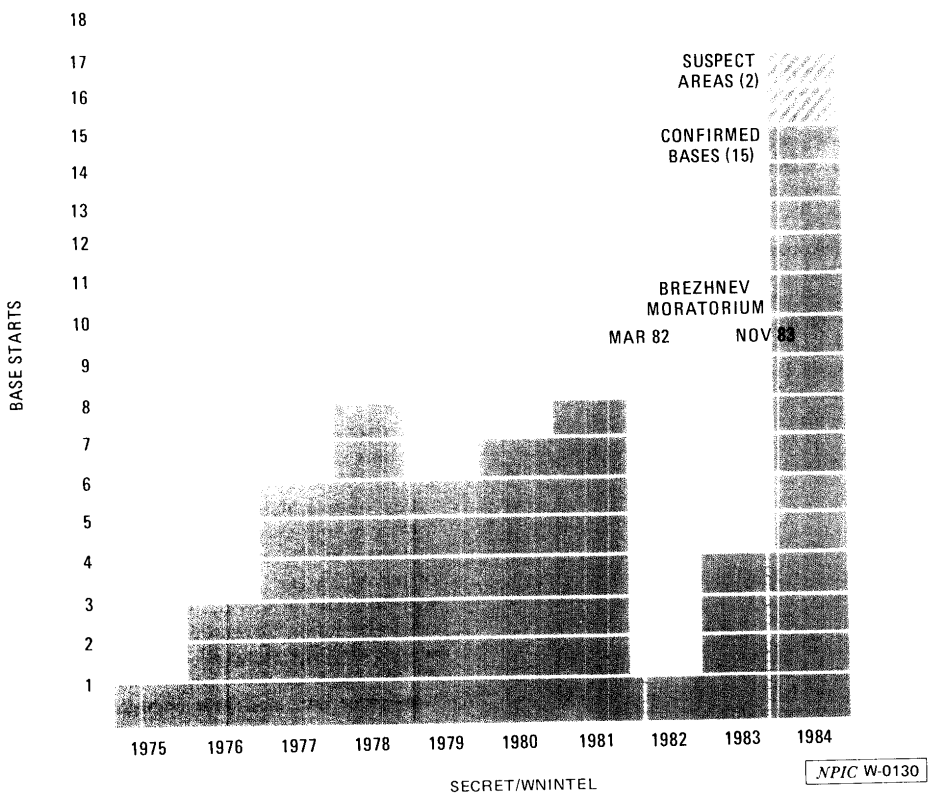

FIGURE 9. SS-20 BASE CONSTRUCTION STARTS BY YEAR

25X1

25X1

Sanitized Copy Approved for Release 2010/10/19 : CIA-RDP85T00840R000101130001-2

Sanitized Copy Approved for Release 2010/10/19 : CIA-RDP85T00840R000101130001-2

Western USSR/Vinnitsa SRF Army

Belokorovichi Division

34. **Korosten.** On [redacted] SS-20-associated construction was confirmed at Korosten SSM Launch Position 7, and the launch position was redesignated Korosten Mobile IRBM Base 1. This former SS-4 MRBM launch site had been a suspect site since mid-July, when tree clearing was observed in the former launch area. By mid-September, foundations for a C3 area (consisting of a C3 building and an associated multibay garage) and the foundation for a security building were present. On [redacted] foundation footings for one four-bay garage were observed. (S/WN)

35. **Usovo.** Construction continued at Usovo Mobile IRBM Base 1, which had been identified in August. By [redacted] footings for three four-bay garages were in the operations area, and work was proceeding on the possible C3 building. There were no foundations or clearings for single-bay garages. (S/WN)

36. **Zhitomir.** Zhitomir MRBM Launch Site 2 was confirmed as an SS-20 base on [redacted] and designated Zhitomir Mobile IRBM Base 1. Foundation footings for two type A/B single-bay garages and one four-bay garage were in the operations area, along with excavation/grading for an additional unidentified building. Zhitomir Mobile IRBM Base 1, a suspect site since early August, is the fourth base in the Belokorovichi Division. (S/WN)

37. **Belokorovichi.** No significant activity occurred at Belokorovichi SSM Launch Position 4 (formerly launch site 1), a former SS-4 launch site where an NPHF under construction was identified on [redacted] When last observed, on [redacted] footings for a high two-bay building and a foundation for a technical support building were present. Additional tree clearing had also taken place, suggesting that an SS-20 base may also be constructed here. (S/WN)

Mozyr Division

38. Probable C3 upgrading appeared to be in progress within the division. By [redacted] construction was complete on the three 40-meter lattice towers and the adjacent control building at the Mozyr IRBM Division Command Post Bunker. A TWIN EAR antenna was mounted on each tower. Additionally, the north side of the control bunker was being excavated. At the Mozyr IRBM Division transmitter, construction begun last quarter was completed, and two probable satellite communications dishes were on the Type E satellite communications building on [redacted] The installation of tower-mounted TWIN EAR antennas, the excavating of the command post, and the construction of an additional satellite communications building for the division indicate another major C3 upgrade in the Mozyr IRBM Division. The last comparable C3 upgrade took place in the Mozyr Division in 1976, with the deployment of the SS-20. (S/WN)

Romny Division

39. **Akhtyrka.** Akhtyrka Mobile IRBM Base 2, in the late stages of construction during the previous reporting period, was completed by [redacted] SS-20-associated equipment was observed in the support area on [redacted] and by [redacted] 13 canvas-covered MSVs and one TEL with training canister were present. As of [redacted] only three MSVs and the TEL with training canister remained in the support area. (The remaining equipment may have been moved into the completed operations area.) Excess construction material and debris had been cleared from both the operations and support areas, and previously exposed cable trenches had been backfilled. The C3 area was also complete. (S/WN)

40. **Krolevets.** Krolevets Mobile IRBM Base 2 was assessed to be operational during December. The nine single-bay garages and the three multibay garages in the operations area had been completed by [redacted] but modification work on the former missile-ready bunkers continued until late October. SS-20-associated equipment, consisting of ten MSVs and one TEL with training canister, was first seen at this base on [redacted] Partial coverage during November increased the difficulty of assessing the status of the base, but snowmelt on the roofs of three single-bay garages on [redacted] indicated that occupancy might have begun (see paragraph 52). Complete coverage of [redacted] showed that construction in both the operations and support areas had been completed, and the SS-20 support equipment was no longer in open storage. (S/WN)

Sanitized Copy Approved for Release 2010/10/19 : CIA-RDP85T00840R000101130001-2

Sanitized Copy Approved for Release 2010/10/19 : CIA-RDP85T00840R000101130001-2

41. **Lebedin.** Twelve probable MSVs arrived at Lebedin Mobile IRBM Base 1 between [redacted] (Figure 10). The vehicles, several of which were camouflaged, were in open storage at the western end of the operations area, and they remained there on [redacted] Because this base has been operational since May 1982, this equipment was probably destined for one of the three bases under construction in this division. As of 16 November, Akhtyrka Mobile IRBM Base 1 was the only one of the three bases under construction in this division which had not received SS-20 equipment. (S/WN)

[redacted]

42. **Romny.** As of [redacted] no apparent progress had been made on the C3 upgrading at the Romny MR/IRBM Division Command Post Bunker. During the past year, a Type E satellite communications station and a hardened antenna have been under construction. (S/WN)

Lutsk Division

43. **Sokal.** By [redacted] eight single-bay garage foundations had been identified at Sokal Mobile IRBM Base 1. Three foundations contained only footings; the remaining five contained both footings and lateral crossbeams. Footings for three four-bay garages were also in the operations area. Along the southern edge of the operations area were footings for a probable C3-associated multibay garage. (S/WN) 25X1 25X1

44. **Brody.** On [redacted] Brody Mobile IRBM Base 1 was declared operational. All nine single-bay garages and the three multibay garages in the operations area were externally complete. Snow was cleared from in front of these garages and from the main roads at the base. Multibay garages in the support and C3 areas were also complete, and the temporary support area was dismantled. In a probably related development, SS-20 equipment that had been in storage at nearby Brody Launch Position 3 on [redacted] was no longer present on [redacted] It probably had been transferred to Brody Mobile IRBM Base 1. (S/WN) 25X1 25X1 25X1 25X1

45. **Brody Launch Position 3.** On [redacted] seven camouflaged SS-20-associated vehicles were in the west end of the former SS-4 launch area. The vehicles included three probable TELs and four probable MSVs. By [redacted] these vehicles had been repositioned onto three of the four former launch pads. This equipment was probably in temporary storage awaiting completion of Brody Mobile IRBM Base 1, which was in a late stage of construction on that date. (S/WN) 25X1 25X1 25X1

46. **Lutsk.** The status of the C3 upgrading at the Lutsk IR/MRBM Division Command Post Bunker could not be determined because of the lack of imagery during the reporting period. During the previous reporting period, several antennas had been under construction in the facility, including a STICK PIN, a FISHBONE, a five-element array, and a hardened antenna. (S/WN)

Western USSR/Smolensk SRF Army

25X1

Lida Division

47. **Pruzhany.** Construction of Pruzhany Mobile IRBM Base 1 advanced to the midstage. By [redacted] work was under way on all nine single-bay garages. Two four-bay garages were in the late stages of construction, and the foundation for a third four-bay garage was in place. The C3 building and its associated 11-bay garage were still in the early stages of construction. (S/WN) 25X1 25X1

48. **Ruzhany.** Construction continued at Ruzhany Mobile IRBM Base 1. Single-bay garage components were stored in the operations area on [redacted] with a sufficient number of assembled end sections for the construction of three single-bay garages. (S/WN) 25X1 25X1

Sanitized Copy Approved for Release 2010/10/19 : CIA-RDP85T00840R000101130001-2

Sanitized Copy Approved for Release 2010/10/19 : CIA-RDP85T00840R000101130001-2

Central USSR/Vladimir SRF Army

Yurya Division

49. **Yurya.** The dismantlement under way at Yurya Mobile IRBM Base 3 during the previous reporting period was observed at three additional bases in this division between October and December. By [redacted] all single-bay garage components had been removed from the operations area of Yurya Mobile IRBM Base 3, and dismantlement had begun at Yurya Mobile IRBM Base 1, where one single-bay garage was completely dismantled and a second was partially down. Dismantlement at Mobile Base 1 had been finished by [redacted] (Figure 11), and all components had been removed by [redacted] At Yurya Mobile IRBM Base 5, one single-bay garage was dismantled by [redacted] and all nine had been dismantled by [redacted] Dismantlement at Yurya Mobile IRBM Base 2 was under way on [redacted] ber, and by [redacted] five single-bay garages were down, although none of the disassembled components had been removed. Dismantlement had begun at Yurya Mobile IRBM Base 4 by [redacted] when one single-bay garage had been dismantled. (S/WN)

[redacted]

50. At Mobile Base 5, excavating was observed in three single-bay garage foundations on [redacted] Subsequent snowfall precluded detailed assessment of this activity before the end of the reporting period. However, modification of the single-bay garage foundations or expansion of the three-bay garages would probably be the first indication that the dismantled bases were being converted to another missile system. (S/WN)

51. Although dismantlement has been taking place at all five Yurya mobile IRBM bases, no changes have been identified at the regimental C3 headquarters. The C3 headquarters for Mobile Bases 1, 2, and 5 were last observed on [redacted] 25X1 and for Mobile Base 3 on [redacted] When 25X1 the Yurya IRBM Division Headquarters was last observed, on [redacted] no changes had taken 25X1 place. If a new missile system is being deployed in the Yurya Division, the lack of modifications to the C3 facilities indicates that the new missile system will employ the existing C3 system. (S/WN)

52. Yurya Mobile IRBM Base 4 was the last 25X1 IRBM base in the division to begin undergoing dismantlement. On [redacted] a distinctive 25X1 snowmelt pattern, probably occupancy related, was observed on the roofs of several single-bay garages. As observed there and at other SS-20 bases, this pattern appears approximately 7 meters 25X1 from the front right side of the single-bay garage at 25X1 the roof peak (Figure 12). Although wind and sun 25X1 factors affect the snowmelt, this pattern probably indicates occupancy. After [redacted] no 25X1 snowmelt pattern was observed on the single-bay 25X1 garage, no snow was cleared from in front of the 25X1 single-bay garages (this is usually done at an operational base after a snowfall), and ground support equipment was observed at the RTP (see paragraph 55). By [redacted] dismantlement had 25X1 begun, with one single-bay garage down and the 25X1 roofs of four others open. (S/WN)

53. Several features were common to dismantlement procedures at all the dismantled IRBM bases: the appendages on the single-bay garages were removed; single-bay garage components were stacked next to the foundation until the entire garage was dismantled; dismantlement involved single-bay garages only—the three-bay garages remained intact; and dismantlement proceeded by battalion. After each base was dismantled, the single-bay garage components were taken to the Yurya RTP and probably shipped either to another base under construction or to a missile support rear depot. The dismantlement of all nine single-bay garages has taken approximately one month per base and has been preceded by equipment transshipment at the RTP. (S/WN)

54. **Yurya RTP.** Single-bay garage components in gondola cars were observed in the RTP on [redacted] The components 25X1 probably had come from Yurya Mobile IRBM Base 1, which had been dismantled by [redacted] 25X1 and from Yurya Mobile IRBM Base 5, which had been dismantled by [redacted] Other activity 25X1 was observed at the RTP on [redacted] 25X1 [redacted] and involved flatcars, 25X1 gondola cars, and unidentified special-purpose railcars used to ship SS-20-related support equipment. (S/WN)

55. Shipment of SS-20-associated equipment from the Yurya Division was observed as early as [redacted] 25X1 [redacted] when at least seven missile-associated rail- 25X1

[redacted] 25X1
25X1

Sanitized Copy Approved for Release 2010/10/19 : CIA-RDP85T00840R000101130001-2

Sanitized Copy Approved for Release 2010/10/19 : CIA-RDP85T00840R000101130001-2

25X1
25X1

25X1

cars were in the transloading area of the Yurya RTP. At that time, it was not clear whether equipment was being shipped out or shipped in, possibly for Yurya Mobile Missile Base 6 (which was in an early to midstage of construction). Because single-bay garage dismantlement had not started at that time, there was no reason to suspect that SS-20 equipment was being transported from the division. Subsequently, single-bay garages have been dismantled at the Yurya IRBM bases, and no equipment has been seen at Yurya Mobile Missile Base 6; therefore, the activity at the Yurya RTP on was the initial indication of the SBG dismantlement in the Yurya Division. (S/WN)

56. Shipment of SS-20 equipment from the Yurya Division continued during the reporting period. Five to 11 missile-associated railcars were in the transloading area of the Yurya RTP on 12 and No other missile railcars were observed until when only one missile railcar was observed. The transshipment activity observed on was probably related to the dismantlement of Yurya Mobile IRBM Base 5, which began on The activity on was probably related to the dismantlement of Yurya Mobile IRBM Base 2, which began on The last transshipment activity was observed on and was probably associated with Yurya Mobile IRBM Base 4 (Figure 13). (S/WN)

57. Also at the Yurya RTP, cars were in the transloading area (Figure 14). No T-vent railcars have been observed since (S/WN)

25X1
25X1
25X1
25X1
25X1

Eastern USSR/Chita SRF Army

25X1
25X1

25X1
25X1
25X1

Kansk Division

25X1
25X1
25X1
25X1
25X11
25X1

58. **Kansk Mobile IRBM Base 4.** On a new scratch-built mobile missile base was identified in the early stages of construction. On it was confirmed as an SS-20 base upon identification of type A/B single-bay garage foundations and designated Kansk Mobile IRBM

25X1

25X1

Sanitized Copy Approved for Release 2010/10/19 : CIA-RDP85T00840R000101130001-2

Sanitized Copy Approved for Release 2010/10/19 : CIA-RDP85T00840R000101130001-2

Page Denied

Sanitized Copy Approved for Release 2010/10/19 : CIA-RDP85T00840R000101130001-2

Sanitized Copy Approved for Release 2010/10/19 : CIA-RDP85T00840R000101130001-2

25X1
25X1
25X1

Base 4 (Figure 15). By all nine single-bay garages had been constructed, (Figure 16), although construction had not yet begun on the multibay garages in the operations area or on any of the buildings in the support area. The rapid pace of construction (approximately two weeks from foundations to completion) was also unusual. (S/WN)

25X1

59. **Kansk Mobile IRBM Base 3.** On Kansk Mobile IRBM Base 3 was still in the late stages of construction; by it was assessed to be operational. The operations area was externally complete, two canvas-covered MSVs were in the operations area, and another canvas-covered MSV was in the C3 area. The support area was still under construction. On at least eight MSVs were in the operations area, and all structural work and cleanup appeared to be complete (Figure 17). The operations area, the C3 area, and the support area all appeared to be complete by The pace of construction in the operations area and the C3 area seemed to proceed at a more rapid pace at this facility than is usually observed at SS-20 bases. (S/WN)

25X1
25X1
25X1
25X1
25X1

25X1
25X1

Sanitized Copy Approved for Release 2010/10/19 : CIA-RDP85T00840R000101130001-2

Sanitized Copy Approved for Release 2010/10/19 : CIA-RDP85T00840R000101130001-2

25X1
25X1

25X1

60. **Kansk RTP**. On an SS-20 equipment transfer was in progress at the RTP. At least eight missile-associated railcars were present, and an SS-20 canister dolly was aligned with one of the rail transfer sheds. On (Figure 18), at least seven of the missile-associated railcars (one not in Figure 18) remained at the RTP, but the SS-20 canister dolly had been canvas covered, indicating that the transfer operation may have been concluded. By the canister dolly was no longer present, and none of the missile-associated railcars was aligned with the rail transfer sheds. All the missile-associated railcars had departed by This activity may have been related to Kansk Mobile IRBM Base 3, which was assessed to be operational on (S/WN)

61. **Kansk Regimental Headquarters.** The regimental headquarters at Kansk Mobile IRBM Bases 2 and 3 were externally complete by respectively. Each headquarters consists of a three-story rectangular C3 building with a roof-mounted antenna array, a ten-bay garage, and two lattice towers. (S/WN)

25X1
25X1
25X1
25X1
25X1
25X1
25X1
25X1

25X1
25X1

Sanitized Copy Approved for Release 2010/10/19 : CIA-RDP85T00840R000101130001-2

Sanitized Copy Approved for Release 2010/10/19 : CIA-RDP85T00840R000101130001-2

25X1
25X1

62. **Kansk IRBM Division Headquarters.** On 25 December, Kansk IRBM Division Headquarters was in the late stages of construction. The rectangular C3 building appeared to be externally complete, but the administration building, which is connected with the C3 building by a passageway, was still under construction. Also, the WOOD BINE satellite communications vehicle and the two R-405 generators, previously seen in a vehicle storage area 500 meters west of the C3 building, had been moved to the antenna field adjacent to the C3 building. (S/WN)

25X1

25X1

Eastern USSR/Omsk SRF Army

25X1

Barnaul Division

66. **Barnaul IRBM Division Headquarters.** A probable mobile high frequency (HF) communications set, providing a temporary link to the SRF HF network, was at Barnaul IRBM Division Headquarters on when a probable horizontal dipole antenna was observed 300 feet south of the Barnaul Division headquarters building. The antenna was near a parking area containing eight probable communications vehicles. This HF communications set is similar to a mobile HF communications set previously identified in the Kansk SS-20 Support Complex. Although mobile satellite communications equipment such as WOOD BINE, PARK DRIVE, and mobile signal units are commonly seen in open storage at SRF division headquarters, usually only the mobile satellite communications vehicles are observed deployed at the division headquarters; the mobile HF sets are normally seen only in the field. The mobile HF communications units deployed at the Barnaul and Kansk division headquarters, however, probably are lateral hook-ups to a nearby SRF division headquarters. The units may be serving as temporary links to the SRF HF network until permanent HF facilities can be constructed. By the end of the reporting period, no permanent long-range HF communications transmitter or receiver facilities had been constructed in the Barnaul or Kansk Divisions. SRF divisions usually are equipped with HF

25X1

25X1

25X1
25X1

Sanitized Copy Approved for Release 2010/10/19 : CIA-RDP85T00840R000101130001-2

Sanitized Copy Approved for Release 2010/10/19 : CIA-RDP85T00840R000101130001-2

transmitter and receiver facilities at the division headquarters, and many of them have antenna control bunkers. Prefabricated concrete arches and conduit sections, already available at the Barnaul and Kansk RTPs, could be used to construct the permanent communications facilities usually deployed at SRF divisions. (S/WN)

67. By Barnaul IRBM Mobile Base 5 Headquarters was externally complete and consisted of a three-story rectangular C3 building, two lattice towers, and two C3-related ten-bay garages. (S/WN)

68. **Barnaul Support Complex.** Two new types of probable nuclear-associated vehicles were observed in the Barnaul NPHF on These new vehicles were also observed at the Kansk NPHF on and have subsequently been observed at the Glazov Missile Support Rear Depot. They probably have been present at Barnaul since The specific function of the two new vehicles, which are probably towed, has not yet been determined, but they have only been observed in or near ated areas (see paragraph 64). (S/WN)

69. On an SS-20 equipment transfer involving at least nine and possibly ten missile-associated railcars was in progress at the Barnaul RTP. The missile-associated railcars, which were not present on had departed by This transfer operation was probably related to Barnaul Mobile IRBM Base 5, which was assessed to be operational on (S/WN)

70. Also on four SS-20 equipment mockups were under construction in a tree clearing near the steamplant at the support complex. Construction of the mockups was first seen on The presence of mockups at SS-20 support complexes is unusual. (S/WN)

71. On a large building, similar to the large buildings at three Strategic Rocket Forces facilities, was identified under construction 17 nm northeast of the Barnaul Support Complex at 53-33-42N 084-16-21E. This building was in the early stages of construction and consisted of two parallel rows of footings and rails for a crane. When complete, the building will be 49 meters wide, 24 meters high, and at least 49 meters long. The function of this large building is to conceal construction of a probable command and control silo and possibly some type of survivable communications antenna system. However, it cannot be determined if this C3 system will be solely for the Barnual IRBM Division or part of a national-level survivable C3 system. (S/WN)

72. **Barnaul Mobile IRBM Base 4.** No activity was observed at Barnaul Mobile IRBM Base 4. Construction of this base halted in June 1984 and has not resumed. The base remained in an early stage of construction. (S/WN)

73. **Barnaul Mobile IRBM Base 5.** On the first SS-20-associated equipment at Barnaul Mobile IRBM Base 5 was observed in the support area. Two TELs, three MSVs, and four canvas-covered probable MSVs were in the support area, and a TEL with a training canister and an MSV

Sanitized Copy Approved for Release 2010/10/19 : CIA-RDP85T00840R000101130001-2

Sanitized Copy Approved for Release 2010/10/19 : CIA-RDP85T00840R000101130001-2

were involved in a driver training exercise near the support area. On [redacted], when the base was assessed to be operational, nine canvas-covered MSVs were in the operations area, the roads in the operations area were cleared of snow, and the snow had been removed from in front of the single-bay garages and the five-bay garages. In related activity, between [redacted] at least ten probable MSVs departed the support complex where they had been in storage. These MSVs were probably moved to Barnaul Mobile IRBM Base 5, which was the only base actively under construction and nearing completion in the division. (S/WN)

Novosibirsk Division

74. **Novosibirsk Mobile IRBM Base 3.** Between [redacted] the last remaining single-bay garage appendage at Novosibirsk Mobile IRBM Base 3 was dismantled. No single-bay garage appendages remain in the Novosibirsk Division. (S/WN)

75. **Novosibirsk IRBM Transmitter Station.** At Novosibirsk IRBM Transmitter Station, both dishes had been installed on the Type C satellite communications building by [redacted] (S/WN)

76. **Novosibirsk Mobile IRBM Base 5.** A deployed FINE PAIR antenna was observed in the operations area at Novosibirsk Mobile IRBM Base [redacted] It remained deployed until mid-December. This is the longest observed deployment of the FINE PAIR, as well as the first observation of this antenna in an operations area. The FINE PAIR antenna, three van trucks, a van truck with a trailer, and a possible C3-associated MSV were deployed around a four-bay garage. The FINE PAIR is a probable radio-relay antenna which has been observed only with SS-20 C3 training exercises. (S/WN)

Field Training

77. Most of the SS-20 field training exercises observed during this quarter were concentrated in the Drovyanaya Division, where a regimental exercise began in early December and continued after the close of the reporting period (Table 4). Imagery of the probable location of the September launches at Drovyanaya was also obtained. Two field training exercises were also at Novosibirsk. This low level of activity is consistent with levels observed during previous fourth quarters. (S/WN)

78. **Drovyanaya.** Two battalions of a probable regiment-level exercise were observed at FTA 024 (Figure 21) and FTA 029 on imagery of [redacted] An SS-20 was launched from Drovyanaya, with reported coordinates near FTA 029, on [redacted] another SS-20 launch on [redacted] had coordinates at nearby FTA 028, which was not imaged (DEFSMAC S/DQ/834-84). These launches probably were from one or more of the FTAs involved in the exercise. Another regimental exercise began on [redacted] and consisted of three launch battalions and a C3 unit in FTAs 012, 013, 025, and 026 (Figure 22). (S/WN)

25X1
25X1
25X1
25X1
25X1
25X1

Table 4.
Field Training Exercise Summary, 1 October–31 December 1984

Location	Date	Remarks
Drovyanaya		
FTA 024 250/0880 [redacted]		Prob regimental FTX; launch bn, assoc C3 unit
FTA 029 180/0100 [redacted]		Launch bn
FTA 012 252/0136 [redacted]		C3 unit
FTA 012 252/0136 [redacted]		Regimental FTX; camouflaged launch bn
FTA 013 255/0138 [redacted]		Camouflaged C3 unit
FTA 025 249/0162 [redacted]		Camouflaged prob launch bn
FTA 026 252/0180 [redacted]		Camouflaged launch bn
Novosibirsk		
C3 relay site near RTP		Camouflaged C3 unit
FTA 001 251/0019 [redacted]		SS-20-assoc vehicles

*First identified during reporting period
**FTX in progress at close of reporting period

This table is classified SECRET/WNINTEL.

25X1
25X1
25X1
25X1
25X1
25X1
25X1
25X1
25X1
25X1
25X1
25X1
25X1
25X1

[redacted]

Sanitized Copy Approved for Release 2010/10/19 : CIA-RDP85T00840R000101130001-2

Sanitized Copy Approved for Release 2010/10/19 : CIA-RDP85T00840R000101130001-2

25X1
25X1

25X1

Testing and Development

•

Kapustin Yar MSTC

79. Significant developments and observations at Kapustin Yar during the period included the following: one KY-15 was launched (for a total of two during 1984); two KY-15 canisters were observed without domed endcaps, and they were shorter than an SS-20 canister without a domed endcap (; a missile support van (MSV) was observed for the first time in the western missile receiving/checkout area of the general support area; three KY-14 launches were conducted, including a dual launch (for a total of six during 1984); three SS-20s were launched (for a total of seven from Kapustin Yar during 1984); an overturned probable SS-20 TEL with sections of a load simulator was observed just south of the general support area; and an unidentified U-shaped structure was constructed just east of launch site 8C. Figure 23 depicts relevant facilities at Kapustin Yar, and Table 5 summarizes mobile IRBM launches from Kapustin Yar.

25X1
25X1
25X1
25X1

25X1

25X1

Sanitized Copy Approved for Release 2010/10/19 : CIA-RDP85T00840R000101130001-2

Sanitized Copy Approved for Release 2010/10/19 : CIA-RDP85T00840R000101130001-2

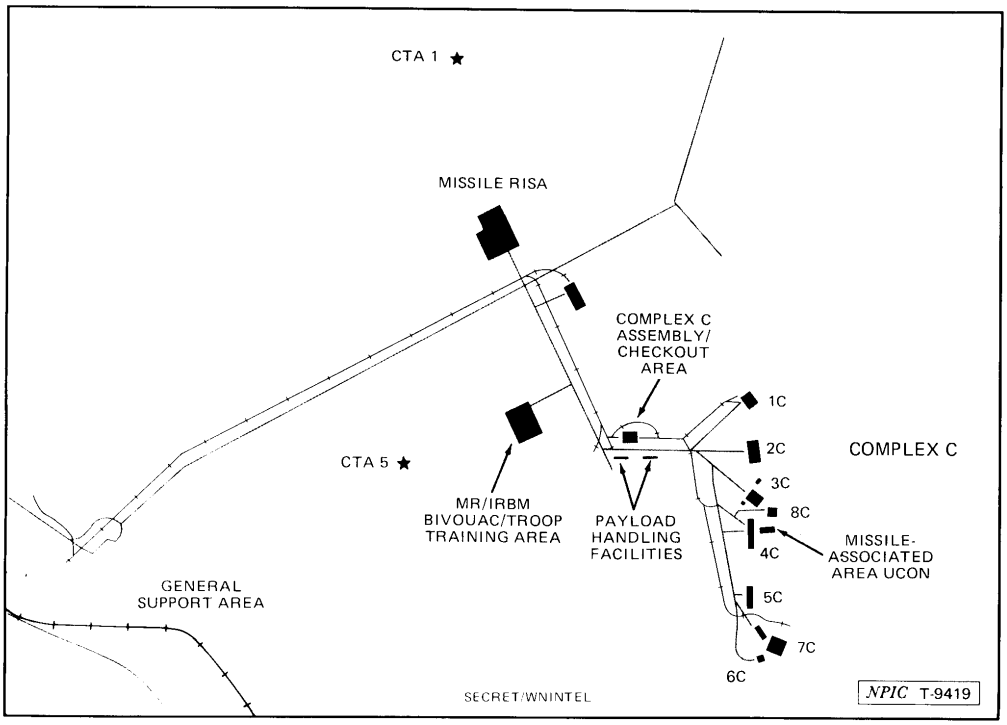

FIGURE 23. KAPUSTIN YAR COMPLEX C AND ASSOCIATED SUPPORT FACILITIES

Table 5.
Kapustin Yar Mobile IRBM Launch Summary, 1 October–31 December 1984

Missile Type*	Launch Date*	Launch Site**	Remarks*
SS-20		Unknown	Success***
KY-14†		KY-1C††	Success
KY-15		Unknown	Success
SS-20		Unknown	Success***
KY-14†		KY-1C††	Success†††
KY-14†		KY-1C††	Success†††
SS-20		Unknown	Success***

[redacted]

**Derived from imagery.
***Reduced range test to the Makat impact area.
†The KY-14 is assessed to be a standard SS-20 booster that carries a communications-related payload instead of a weapons-related payload.
††Although prelaunch activity was observed, no direct evidence of the launch (burn marks, blast effects, or self-eject launch technique [SELT] rings) was identified.
†††This was the first dual KY-14 launch. The missiles were launched at 1505Z and 1508Z.

This table is classified TOP SECRET [redacted]

80. **KY-15 Activity.** Activity in support of crew training and flight testing for the KY-15 program was observed during the reporting period at site 1C and in the general support area. DEFSMAC reported the second launch of a KY-15 on [redacted] from Kapustin Yar (DEFSMAC K/DQ/1480-84 [TSZ]; Table 6). Detailed softcopy analysis has revealed distinctive differences between the KY-15 and SS-20 missile canisters. [redacted]

Table 6.
KY-15 Launch Summary

Launch Date*	Launch Site**	Remarks*
[redacted]	LP 1C-4	Success
	Unknown	Success

[redacted]

**Derived from imagery.

This table is classified TOP SECRET [redacted]

81. **MR Test Complex C Site 1.** Imagery of the site was acquired on [redacted] and no prelaunch activity was under way. The site was also imaged on [redacted] but launch position 1C-4 (which had been constructed to support the KY-15) was cloud covered, and no prelaunch activity was observed in the cloud-free portions of the site. DEFSMAC reported the launch of a KY-15 on [redacted] from Kapustin Yar, and by [redacted] another probable KY-15 canister (without domed endcap) was placed in open storage at launch position 1C-2, which has been used as an expended canister storage area (Figure 24). (TSZ)

82. Analysis has revealed distinctive differences between the KY-15 and SS-20 missile canisters. Both types of canisters, however, have the same outside diameter of about [redacted] and probably the same launch assist device (LAD) extension (Figure 25). After detailed softcopy analysis, the KY-15 canisters at site 1 appear to be complete but without domed endcaps and about [redacted] shorter than an SS-20 canister without a domed endcap. The cable raceway of the KY-15

Sanitized Copy Approved for Release 2010/10/19 : CIA-RDP85T00840R000101130001-2

Sanitized Copy Approved for Release 2010/10/19 : CIA-RDP85T00840R000101130001-2

canister is configured differently from that of the SS-20 canister. [redacted]

83. The KY-15 canister (without domed endcap) is [redacted] overall, with a [redacted] long main canister section. In contrast, an SS-20 canister (without domed endcap) is [redacted] long with a [redacted] long main canister section. A complete SS-20 canister is [redacted] long. The LAD extension for both the KY-15 and SS-20 canisters is about [redacted] long and about [redacted] in diameter. The cable raceway on the LAD extension end of the KY-15 canister appears to be about twice the length of the one on the SS-20 canister. The cable raceway that extends toward the front of the KY-15 canister is slightly shorter than the one on the SS-20 canister. [redacted]

84. **General Support Area.** The new [redacted] ter-long TEL and [redacted] -long canister dolly, both probably associated with the KY-15 program, were observed during the reporting period at the general support area. The [redacted] -long TEL was in front of the clerestory building in the east missile/payload handling area on [redacted] One of the two [redacted] -long canister dollies was at the original missile/payload handling area on the same dates; the other one was not observed. No additional details about their configuration were derived. (S/WN)

85. A [redacted] MSV covered with winter camouflage material was at the west missile/payload handling area for the first time on [redacted]

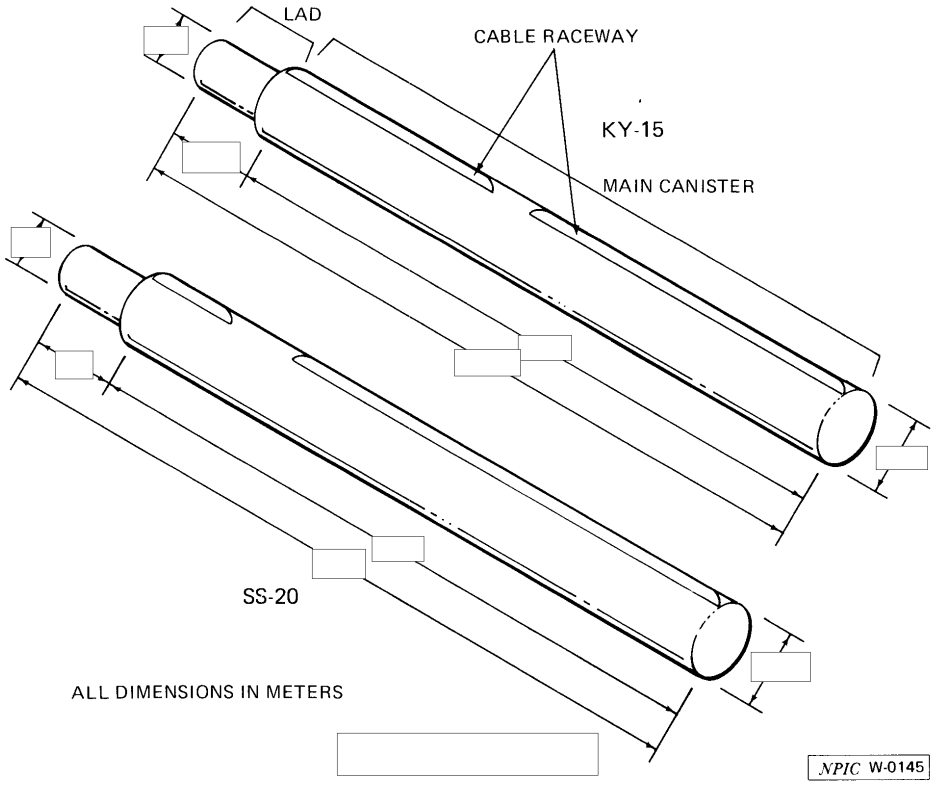

FIGURE 25. COMPARISON OF SS-20 AND KY-15 CANISTERS

Sanitized Copy Approved for Release 2010/10/19 : CIA-RDP85T00840R000101130001-2

Sanitized Copy Approved for Release 2010/10/19 : CIA-RDP85T00840R000101130001-2

[redacted] between the missile receiving and checkout building and the support building. An MSV was in the facility again on [redacted] just north of the missile receiving and checkout building. In addition, an 18-meter-deep, two-bay shed and a nine-bay garage were under construction west of the missile receiving and checkout building. The excavations for the nine-bay garage indicate that it will be at least 18 meters deep and may be 24 meters deep. If this garage is 24 meters deep, it would be the first of that depth at the rangehead. Twenty-four-meter-deep garages related to mobile strategic ballistic missiles were first associated with the SS-16 mobile ICBM at Plesetsk Missile/Space Test Center. In addition, one 14-bay garage and one 15-bay garage, both 24 meters deep, were constructed in the vehicle maintenance area at Mozyr Mobile IRBM Base. (S/WN)

86. A high level of activity was observed at the new driver training course north of the general support area. On [redacted] at least 27 vehicles, including 17 MAZ-543 four-axle chassis and cargo trucks, were on the course. This course was probably constructed to support crew training for the KY-15. (S/WN)

87. **KY-14 Activity.** On [redacted] at 1016Z, prelaunch activity was observed at site 1C, when two camouflaged TELs with missile canisters and nine MSVs were at launch position 1C-3 near the five-bay garage. One of the TELs was at the H-shaped, launch-associated position near the type B single-bay garage, and the other was in a launch line with three MSVs south of the five-bay garage. DEFSMAC reported the launch of a KY-14 from Kapustin Yar at 2242Z on [redacted] DEFSMAC K/DQ/1437-84 [TSZ]; Table 7). On [redacted] no camouflaged vehicles or equipment and no evidence of the launch (burn marks, blast effects, or self-eject launch technique [SELT] rings) were identified. However, an additional expended SS-20 canister had been placed in open storage at launch position 1C-2. (TSZ)

Table 7.
KY-14 Launch Summary

Launch Date*	Launch Site**	Remarks*
[redacted]	Unknown	Success
	Unknown	Success
	Unknown	Success
	Unknown	Success
	LP 1C-3	Success
	LP 1C-3	Success***
	LP 1C-3	Success***

[redacted]

**Derived from imagery
***This was the first dual KY-14 launch. The missiles were launched at 1505Z and 1508Z.

This table is classified TOP SECRET [redacted]

88. On [redacted] two TELs with missile canisters and two MSVs were in a launch line beside the five-bay garage. Six more MSVs were south of the five-bay garage (Figure 26). On [redacted] at 1017Z, only one TEL was observed, and it had been moved to the H-shaped, launch-associated position near the single-bay garage. DEFSMAC reported that the first dual KY-14 launch occurred at 1505Z and 1508Z on [redacted] (DEFSMAC S/DQ/1152-84 [S]). On [redacted] no evidence of the launches was observed, but three additional expended SS-20 canisters had been placed in open storage at launch position 1C-2. Two of the canisters were probably from the [redacted] KY-14 launches, and the other canister was probably from the [redacted] SS-20 launch to the Makat impact area. (TSR)

89. **SS-20 Activity.** Insufficient coverage was acquired of the SS-20-related areas to confidently assess the level of SS-20 crew training activity. However, based on the number of SS-20 launches from the rangehead and the observation of SS-20 battalions or elements of regiments, SS-20 crew training probably continued at a normal pace. (S/WN)

90. Three SS-20s were launched from the rangehead during the reporting period. No prelaunch activity was observed at site 1C for these launches, which occurred on [redacted] and on [redacted] (DEFSMAC S/DQ/970-84 [S], S/DQ/1125-84 [S], and S/DQ/1159-84 [S], respectively; Table 8). No direct evidence of the launches was identified onsite after the launches, but expended SS-20 missile canisters, probably from these launches, were observed in open storage at launch position 1C-2 on [redacted] and on [redacted] A total of seven SS-20s was launched from Kapustin Yar during 1984. (S/WN)

Table 8.
SS-20 Launch Summary for 1984 at Kapustin Yar

Launch Date*	Launch Site**	Remarks*
[redacted]	Unknown	Success
	Unknown	Success
	LP 1C-3	Success
	Unknown	Success
	Unknown	Success***
	Unknown	Success***
	Unknown	Success***

[redacted]

**Derived from imagery
***Reduced-range test to the Makat impact area.

This table is classified TOP SECRET [redacted]

91. **SS-20 Crew Training.** A camouflaged probable SS-20 battalion was at Crew Training Area (CTA) 1 on [redacted] and probably two SS-20 battalions were at CTA 5 on more than one occasion during October. One SS-20 battalion, and occasionally elements of a second, was periodically observed in the battalion-sized operational training area in the bivouac/troop training area. As many as four SS-20 TELs with training canisters and three TEL chassis were observed on the driver training course west of the bivouac/troop training area while other SS-20 crew training was in progress. (S/WN)

Sanitized Copy Approved for Release 2010/10/19 : CIA-RDP85T00840R000101130001-2

Sanitized Copy Approved for Release 2010/10/19 : CIA-RDP85T00840R000101130001-2

25X1
25X1

25X1

92. One SS-20 regiment, and occasionally elements of a second, was in temporary storage or transit at the missile receiving/inspection/storage area during October and November. Construction of the new possible mobile missile-associated nuclear payload handling facility in this area continued at a slow pace. (S/WN)

93. During 1984, SS-20 regiment-sized field training exercises were observed nearly monthly while at least one SS-20 regiment was in transit or in temporary storage in the receiving/inspection/storage area. This suggests that at least two and possibly three SS-20 regiments were cycled through the rangehead per month in 1984. Although some of this activity probably was in support of crew training for regiments to be deployed at new bases, it is likely that most regiments observed at Kapustin Yar in areas historically associated with the SS-20 are from deployed complexes and are participating in cyclical training. (S/WN)

94. On an overturned probable SS-20 TEL with portions of a load simulator was observed south of the general support area (Figure 27). Image interpretability precluded identifying any damage to the overturned TEL, although it was on its side, and sections of the load simulator had been removed. It appeared that the west wall of the drive-through revetment had partially collapsed. A probable crane with a collapsing boom was next to the TEL. (S/WN)

25X1

25X1

25X1

25X1

25X1

Sanitized Copy Approved for Release 2010/10/19 : CIA-RDP85T00840R000101130001-2

Sanitized Copy Approved for Release 2010/10/19 : CIA-RDP85T00840R000101130001-2

25X1
25X1

95. **Unidentified Structure.** At Complex C Site 8, a U-shaped structure was built just east of launch position 8C-1. Two vertical posts were atop the intersection of the legs and the base of the "U," and it appeared that a large meshlike object was stretched between and atop the legs of the "U." Also, a concrete slab wall had been constructed inside of and adjacent to the inner site security fence. This wall is on a line between the probable launch point at launch position 8C-1 and the U-shaped structure. A cable trench extends from the north subsurface building at launch position 8C-1 to the U-shaped structure. The open end of the structure faces downrange. The function of the U-shaped structure has not been determined. This site is externally complete. (S/WN)

96. At the new missile-associated area east of Complex C Site 4C-1, construction appeared to have been completed during the reporting period. The function of this area still has not been determined. (S/WN)

97. **CC&D at Kapustin Yar.** No new CC&D techniques were identified for the SS-20, the KY-14, or the KY-15 during the reporting period. However, the probable TEL for the KY-15 has been observed several times without canvas or camouflage material covering it. Moreover, the canvas on the new-type dollies at Kapustin Yar did not severely hamper their identification or analysis of their configuration. (S/WN)

Production

Single-Bay Garage Component Production and Stockpiling

98. Single-bay garage components continued to be fabricated and stockpiled at Bryansk Guided Missile Support Equipment Plant II. In addition, single-bay garage components continued to be stockpiled at at least three of the seven missile support rear depots (MSRDs; Figure 28). Components for at least 30 single-bay garages were delivered to the field from October through December: nine type C to Yurya Mobile Missile Base 6, nine type A/B to Ruzhany Mobile IRBM Base 1, nine type A/B to Kansk Mobile IRBM Base 4, and at least 3 to Belokorovichi SSM Training Facility School. Probable type A roof end sections were with the components delivered to Ruzhany Mobile IRBM Base 1, which indicates that the components probably came from the dismantled bases at Yurya. By the end of the reporting period, components for at least 47 single-bay garages remained stockpiled at the MSRDs and Bryansk. Numbers of single-bay garages stockpiled at the MSRDs and in the transshipment yards at Bryansk from October through December are listed in Table 9. (S/WN)

Missile Support Rear Depots

99. **Balta MSRD and Berdichev MSRD.** The number of single-bay garage components stored at these two MSRDs, 13 at Balta and 14 at Berdichev, remained unchanged throughout the reporting period. (S/WN)

100. **Bobrovskiy MSRD.** No new activity was observed relating to the storage and transshipment of SS-20 missile support equipment at Bobrovskiy MSRD. (S/WN)

FIGURE 28. SOVIET MISSILE SUPPORT REAR DEPOTS

25X1

Table 9.
Single-Bay Garage Components at Bryansk II and MSRDs, 1 October–31 December 1984

Installation	Usable Coverages	Date Last Imaged	SBGs Present* High	Low	Last	Changes Since
Bryansk II	3		4	2	2	−2
Balta MSRD	2		14	14	14	0
Berdichev MSRD	2		13	13	13	0
Bobrovskiy MSRD	5		0	0	0	0
Glazov MSRD	3		9	0	0	−9
Novaya Mezinovka MSRD	1		0	0	0	0
Surovatikha MSRD	3		18	0	18	+18
Tambov MSRD	2		0	0	0	0

25X1
25X1

*Clouds and obliquity made an exact count of the components impossible. However, the components that could be seen indicated that the count remained the same during the reporting period.

This table is classified SECRET/WNINTEL.

25X1

25X1

Sanitized Copy Approved for Release 2010/10/19 : CIA-RDP85T00840R000101130001-2

Sanitized Copy Approved for Release 2010/10/19 : CIA-RDP85T00840R000101130001-2

101. **Glazov MSRD.** Components for two single-bay garages were shipped from Glazov MSRD between [redacted] All remaining components, enough for seven single-bay garages, were shipped to the field between [redacted] and [redacted]. No new single-bay garage components arrived at the the depot during the reporting period. (S/WN)

102. **Surovatikha MSRD.** Components for approximately 18 single-bay garages were delivered to Surovatikha MSRD between [redacted] The components were stockpiled in a manner which made an exact count of the components impossible. The components were in the two transshipment areas in which single-bay garage components were previously stockpiled and on several flatbed railcars near one of the transshipment areas. All previously stockpiled single-bay garage components had been shipped from Surovatikha prior to [redacted] (S/WN)

Missile Support Equipment Production and Testing Facilities

103. **Volgograd.** During the reporting period, a high count of nine SS-20 TEL chassis was present at Volgograd Steel and Machinery Plant Krasnyy Barricada 221, indicating that the resumption and/or increase in production of probable SS-20 TELs at this plant, which started in mid-1983, is continuing. (S/WN) 25X1 25X1 25X1

104. Testing of mobile missile-related equipment at Volgograd Remote Test Facility 1 continued during the reporting period. This equipment was effectively concealed with camouflage netting, hindering identification. Testing of mobile missile-related equipment resumed at this facility in September 1984 after a three-year hiatus. (S/WN) 25X1 25X1

25X1

Sanitized Copy Approved for Release 2010/10/19 : CIA-RDP85T00840R000101130001-2

Sanitized Copy Approved for Release 2010/10/19 : CIA-RDP85T00840R000101130001-2

Short-Range Ballistic Missile Activity

Sanitized Copy Approved for Release 2010/10/19 : CIA-RDP85T00840R000101130001-2

Sanitized Copy Approved for Release 2010/10/19 : CIA-RDP85T00840R000101130001-2

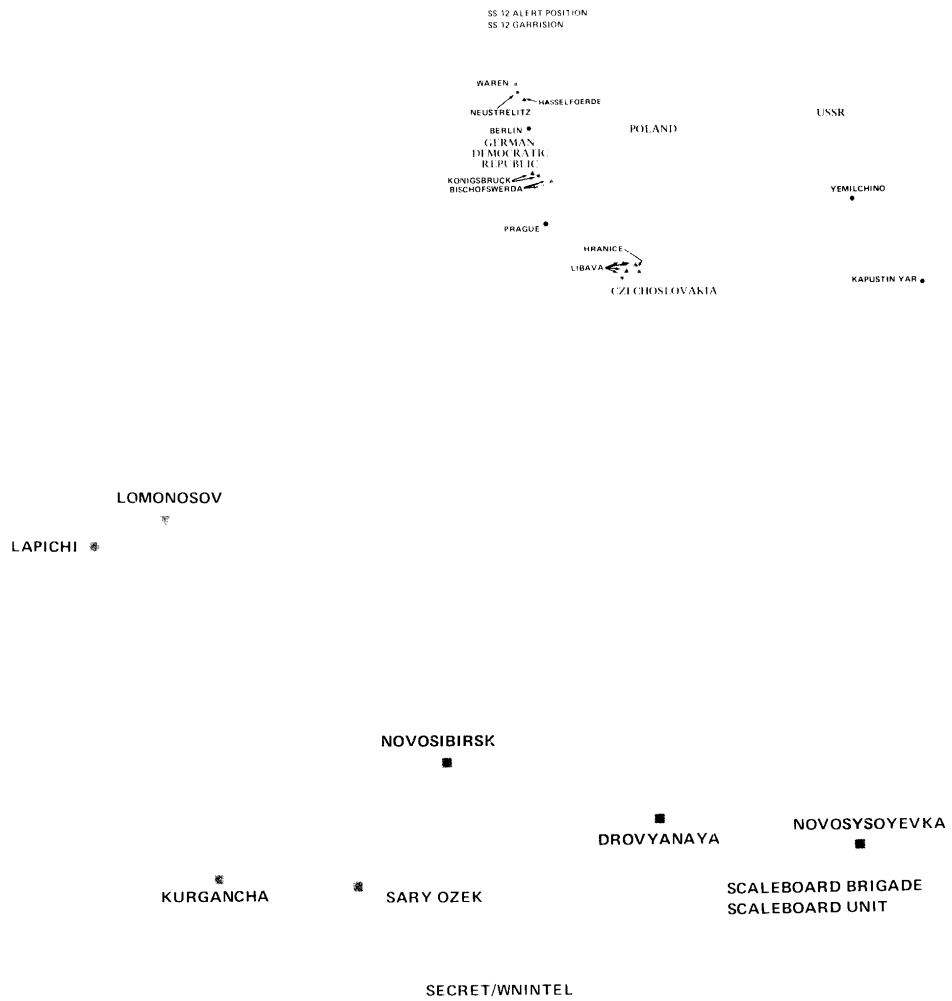

SECRET/WNINTEL

FIGURE 29. LOCATIONS OF SOVIET SS-12/SCALEBOARD-ASSOCIATED FACILITIES

Sanitized Copy Approved for Release 2010/10/19 : CIA-RDP85T00840R000101130001-2

Sanitized Copy Approved for Release 2010/10/19 : CIA-RDP85T00840R000101130001-2

SHORT-RANGE BALLISTIC MISSILE ACTIVITY

Introduction

105. This section of the report addresses the research, development, production, deployment, and logistics of Soviet short-range ballistic missile (SRBM) systems. It summarizes the status of SCALEBOARD (SS-12) deployment in Eastern Europe and the USSR (Figure 29) and the SCALEBOARD involvement in antitactical ballistic missile (ATBM) testing near Emba. Also discussed is the status of SS-23s and SS-21s. An updated SRBM order of battle and a list of acronyms can be found in the appendix. (S/WN)

SCALEBOARD Activity

[redacted]

107. SCALEBOARD equipment had been returned to the Kabanbay-Lake Karashek area near Emba, indicating a resumption of Soviet ATBM tests. SCALEBOARD launchers and support vehicles had been removed from the area by [redacted] and returned between [redacted] No significant SCALEBOARD activity was seen at Kapustin Yar during this reporting period. (S/WN) 25X1 25X1

SS-23 Activity

108. No unusual activity associated with the SS-23 was detected during this reporting period. The introduction of the SS-23 into operational units still has not been observed. (S/WN)

SS-21 Activity

109. The first imagery indication of the introduction of the SS-21 SRBM into Warsaw Pact national forces was obtained on [redacted] SS-21 equipment was in the former free rocket over ground (FROG) battalion area of the [redacted] 9th Tank Division. On [redacted] the third Soviet SS-21 battalion to be identified in the Belorussian Military District was seen. (S/WN) 25X1 25X1 25X1 25X1

Production

110. Expansion of the northern part of the Petropavlovsk Vehicle Assembly Plant continued, although no significant activity was noted. The estimated earliest completion date for this expansion, which has been in progress since late 1979, is late 1985. This facility is believed to be responsible for the manufacture of components and subassemblies of missiles, probably the SS-12 Mod 2, SS-21, and SS-23. The plant also assembles ground support equipment based on the MAZ-543 chassis.* No other significant production activity was observed. (TSR) 25X1

*TSR information extracted from DIA. DDB-1923-4-82, [redacted] *Foreign Missile Production Communist World (U)*, Jun 82, pp 12, 16 (TOP SECRET [redacted] 25X1 25X1

Reverse side blank

Sanitized Copy Approved for Release 2010/10/19 : CIA-RDP85T00840R000101130001-2

Sanitized Copy Approved for Release 2010/10/19 : CIA-RDP85T00840R000101130001-2

Related Activity

Sanitized Copy Approved for Release 2010/10/19 : CIA-RDP85T00840R000101130001-2

Sanitized Copy Approved for Release 2010/10/19 : CIA-RDP85T00840R000101130001-2

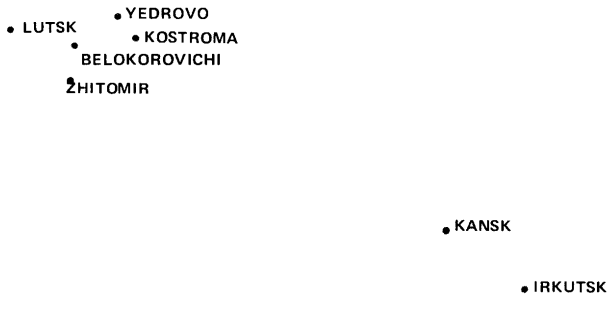

SECRET/WNINTEL

FIGURE 30. LOCATIONS WITH POTENTIAL SOVIET MOBILE MISSILE ASSOCIATION

Sanitized Copy Approved for Release 2010/10/19 : CIA-RDP85T00840R000101130001-2

Sanitized Copy Approved for Release 2010/10/19 : CIA-RDP85T00840R000101130001-2

RELATED ACTIVITY

Introduction

111. This section of the report addresses selected unidentified construction projects which are believed to have a potential mobile missile association. These projects will be closely monitored; significant changes will be reported in this section until identified, after which they will be included in the appropriate section of this or other NPIC reports. (S/WN)

112. The projects in this section remained in a relatively early stage of construction. Three areas of interest at Belokorovichi and Kansk have characteristics suggesting a mobile IRBM association, while five others at Irkutsk, Kostroma, and Yedrovo may have a mobile ICBM association (Figure 30). (S/WN)

Belokorovichi Division

113. On [redacted] tree clearing, possibly in preparation for security fences and building construction, was continuing in the former SS-4 launch area and in the propellant storage area at Zhitomir SSM Launch Position 5 (formerly launch site 3). Initial tree clearing was observed on [redacted] This type of clearing has been seen at other deactivated MRBM sites prior to SS-20 conversion. (S/WN)

114. At the end of this reporting period, four SS-20 mobile IRBM bases had been identified under construction in the Belokorovichi Division. If the Soviets follow the usual pattern of five regiments to a division, it would seem unlikely that the tree clearing at Belokorovichi SSM Launch Position 4 and Zhitomir SSM Launch Position 5 would be for SS-20 bases. Instead, the Soviets may construct only a [redacted] at Belokorovichi SSM Launch Position 4 and an SS-20 base at Zhitomir SSM Launch Position 5. (S/WN)

Kansk

115. No change was detected in the status of the previously reported construction area approximately 10 nm south of Kansk Mobile IRBM Base 4 when the area was last observed on [redacted] When previously observed on [redacted] construction activity consisted of tree clearing and grading. (S/WN)

Irkutsk

Construction Site 1

116. Little activity occurred during the quarter. Three support/storage buildings had been constructed in the construction support camp by [redacted] and footings were present for a fourth. When last observed, on [redacted] steam was emanating from a small building in the construction support camp. No change had occurred in the operations area, where footing excavations for one seven-bay garage were observed. (S/WN) 25X1 25X1

Construction Site 2

117. On [redacted] stanchions and roof braces had been installed in one of the seven-bay garages. By [redacted] most of the wall panels had been installed at this garage, and by [redacted] most of the roof panels were in place. Stanchions were in the foundation footings of another seven-bay garage. Construction was continuing on several buildings in the support area, and trenches were evident at the site. (S/WN) 25X1 25X1 25X1 25X1

Construction Site 3

118. The function of this area was still undetermined when it was last observed on [redacted] Construction was continuing on apartment buildings, barracks, and administration buildings, although no missile-associated buildings have been identified. No rail lines were present, and no extensive security measures, such as fences, were observed. (S/WN) 25X1 25X1 25X1 25X1 25X1

Kostroma SSM Complex

119. Construction of the probable SS-X-24 missile receiving and checkout area continued. The construction is concentrated in two general areas, designated area A and area B (Figure 31). By late December, a rail-through shed, approximately 36 by 12 meters, was under construction in area A. When complete, this rail-through shed may be similar to a rail-through shed in the rail-mobile SS-X-24 missile receiving and checkout area at Plesetsk Missile Handling Facility. Construction continued on two large buildings and several small buildings. The main rail spur leading into area A has been extended the entire length of the facility, and three shorter spurs now branch off the main spur in area A. Another rail line has been extended into area B. In addition, tree clearing and grading resumed in area B; however, no new building construction was observed. (S/WN) 25X1 25X1 25X1

Sanitized Copy Approved for Release 2010/10/19 : CIA-RDP85T00840R000101130001-2

Sanitized Copy Approved for Release 2010/10/19 : CIA-RDP85T00840R000101130001-2

25X1
25X1

25X1

120. Additional construction was observed adjacent to and in the [redacted] facility in the Kostroma RTP. By late December, footings had been installed, and foundation work had begun on an unidentified building adjacent to the payload assembly building. In addition, a graded area and a small, multicompartmented building foundation were observed at the southeast corner of the facility. Expansion of the [redacted] generally has coincided with deployment of new missile systems at Soviet ICBM complexes. (S/WN)

121. In the receiving area of the RTP, a rail concealment structure, approximately 600 meters long, was nearly complete. Peak-roofed sections have been placed over most of the rail line. This structure will conceal any railcars or transshipment activity. The structure, which has been under construction since mid-August, includes one section with a stepped roof. The purpose of this stepped-roof area, previously reported as a probable rail transfer shed, is unknown. (S/WN)

122. When the facilities under construction at Kostroma are complete, they will be capable of supporting both the silo-based and rail-mobile deployment modes of the SS-X-24 ICBM. As yet, no indications of a silo modification program or rail-mobile launch facilities have been identified at Kostroma. (S/WN)

25X1

Yedrovo SSM Complex

25X1
25X1

123. At Yedrovo, where 110 SS-17 ICBMs are deployed, probable SS-X-24-related construction continued in the RTP. By [redacted] external construction of the probable SS-X-24 receiving, inspection, and checkout building was almost complete, and the rail line extended into the high-bay portion of the building. In addition, a concrete block apron was being installed in front of the building and around the footings for a second building. The limited scale of construction tends to rule out deployment of the rail-mobile version of the SS-X-24, which apparently requires more extensive handling facilities such as those at Plesetsk and those under construction at Kostroma. No indications of silo modification have been observed at the launch sites at Yedrovo. (S/WN)

25X1

25X1
25X1

Sanitized Copy Approved for Release 2010/10/19 : CIA-RDP85T00840R000101130001-2

Sanitized Copy Approved for Release 2010/10/19 : CIA-RDP85T00840R000101130001-2

Appendix

Sanitized Copy Approved for Release 2010/10/19 : CIA-RDP85T00840R000101130001-2

Sanitized Copy Approved for Release 2010/10/19 : CIA-RDP85T00840R000101130001-2

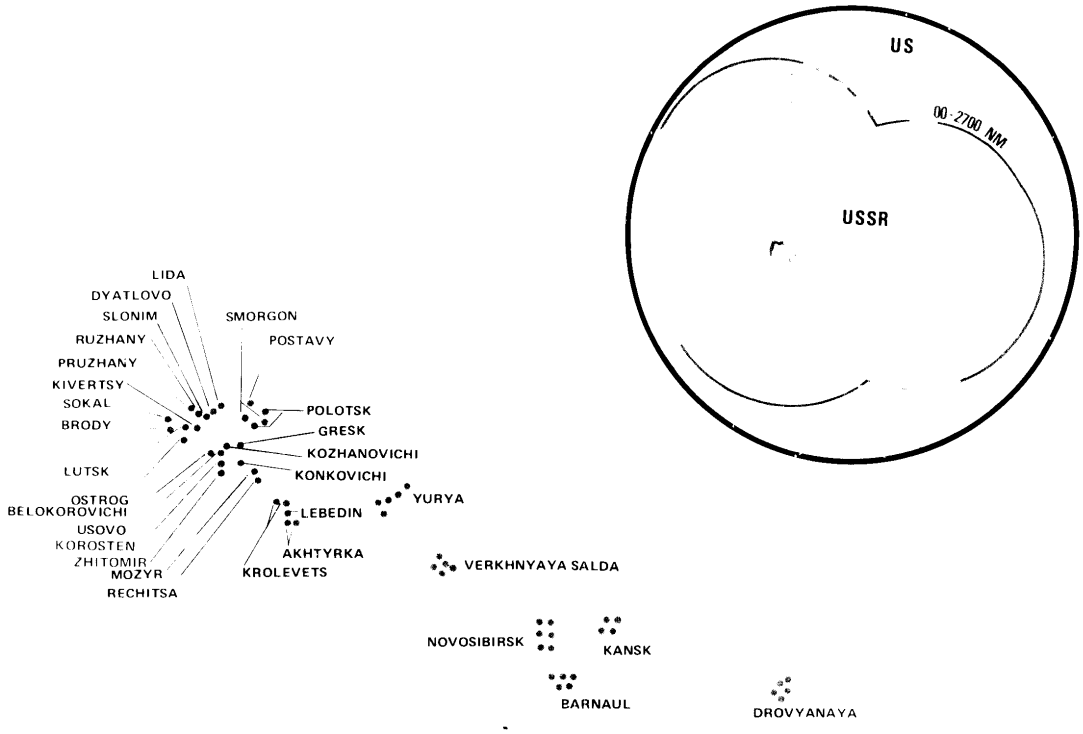

SECRET/WNINTEL

FIGURE A1. DEPLOYMENT AREAS AND MISSILE RANGES OF SS-20 MOBILE IRBM BASES

Sanitized Copy Approved for Release 2010/10/19 : CIA-RDP85T00840R000101130001-2

Sanitized Copy Approved for Release 2010/10/19 : CIA-RDP85T00840R000101130001-2

25X1
25X1

APPENDIX

A1. This section of the report contains significant baseline information pertinent to Soviet mobile missile analysis. This information supersedes all previous NPIC Soviet Mobile Missile Activity Summary Report appendixes. Included are the basic operational characteristics of the weapon systems, dimensions of significant associated structures, abbreviations for standard terminology, and basic installation information, including an NPIC-updated, imagery-derived order of battle for Soviet SRBMs. Also included are three tables that summarize construction and C3 activity at strategic mobile missile bases (Figure A1). Recommendations and comments regarding this section, as well as suggestions for items to be included in future appendixes, are welcome. (S/WN)

Acronyms and Abbreviations

AAD	azimuth alignment device
APRTB	army mobile rocket technical base
C3	command, control, and communications
can/cap	canister/capsule
cp/bnk	command post/bunker
CSI	complex support facilities
CTA	crew training area
DDTA	driver/dispersal training area
ERC	emergency rocket communications
ESF	east support facility
FPRTB	front mobile rocket technical base
FTA	field training area
FTX	field training exercise
GSA	general support area
GSE	ground support equipment
HF	high frequency
INF	intermediate nuclear forces
IR	infrared
LAD	launch-assist device
LCF	launch control facility
LRCM	long-range cruise missile
LRP	launch reference position
LTF	launch test facility
LTS	launch test site
MD	military district
MHF	missile handling facility
MOB	mobile missile base
MRAC	missile receiving and checkout
MRACA	missile receiving and checkout area
MRB	missile-ready building/bunker
MSE	missile support equipment
MSRD	missile support rear depot
MSTC	missile/space test center
MSV	missile support van
MTC	missile test center
NPHF	nuclear payload handling facility
NWHF	nuclear warhead handling facility
NWSA	nuclear weapons storage area
ORPD	independent rocket transport battalion
PBV	postboost vehicle
PGCS	propulsion guidance control section
PHF	payload handling facility
PRTB	mobile rocket technical base
rail-TEL	rail-mobile transporter-erector-launcher
RIC	receiving, inspection, and checkout
RIM	receiving, inspection, and maintenance
RISA	receiving/inspection/storage area
RTB	rocket technical base
RTP	rail-to-road transfer point
SBG	single-bay garage
SMRA	silo materials receiving area
TEL	transporter-erector-launcher
T-L	transporter-loader
UHF/VHF	ultrahigh frequency/very high frequency

This list is classified SECRET.

25X1
25X1

Sanitized Copy Approved for Release 2010/10/19 : CIA-RDP85T00840R000101130001-2

Sanitized Copy Approved for Release 2010/10/19 : CIA-RDP85T00840R000101130001-2

Page Denied

Next 1 Page(s) In Document Denied

Sanitized Copy Approved for Release 2010/10/19 : CIA-RDP85T00840R000101130001-2

Sanitized Copy Approved for Release 2010/10/19 : CIA-RDP85T00840R000101130001-2

Table A1. Summary of Construction at Mobile IRBM Bases as of 31 December 1984

		IDENTIFIED M	IDENTIFIED Y	OPERATIONAL M	OPERATIONAL Y	SBGs COMP	SBGs UCON	BAYS	MULTIBAY GARAGES COMP	MULTIBAY GARAGES UCON	MULTIBAY SUPPORT GARAGES 9-BAY COMP	9-BAY UCON	10-BAY COMP	10-BAY UCON	11-BAY COMP	11-BAY UCON	CLERESTORY BUILDINGS COMP	CLERESTORY BUILDINGS UCON	HIGH 2-BAY BUILDINGS COMP	HIGH 2-BAY BUILDINGS UCON	TECHNICAL SUPPORT BUILDINGS COMP	TECHNICAL SUPPORT BUILDINGS UCON	NPHF AT RTP	RTP	COMMENTS
EASTERN USSR	**Chita SRF Army**																								
	DROVYANAYA DIVISION																								
	Base 1	07/76	09/77	9	—	3	3	—	—	—	—	—	2	—	—	—	—	—	—	—	•				
	Base 2	01/77	06/78	9	—	3	3	—	—	—	—	—	2	—	—	—	—	—	—	—	•				
	Base 3	11/77	12/78	9	—	3	3	—	—	—	—	—	2	—	—	—	—	—	—	—	•				
	Base 4	11/78	11/81	9	—	4	3	—	—	—	—	—	2	—	—	—	—	—	—	—	•			Bunker being excavated	
	Base 5	04/79	03/80	9	—	3	3	—	—	—	—	—	2	—	—	—	—	—	—	—	•				
	Remote	08/79	—	—	—	—	—	—	—	—	—	—	—	—	—	—	—	—	—	—	•				
	KANSK DIVISION																						RTP ucon at support cplx. unid nuclear-assoc vehicles		
	Base 1	09/82	12/83	9	—	5	3	—	—	—	1	—	—	—	—	—	—	—	—	—	•				
	Base 2	03/83	09/84	9	—	5	3	—	—	—	1	—	1	—	—	—	—	—	—	—	•				
	Base 3	07/84	11/84	9	—	5	3	—	—	—	1	—	—	—	—	—	—	—	—	—	•				
	Base 4	12/84	—	—	1	—	—	—	—	—	—	—	—	—	—	—	—	—	—	—	•			Base in early stages of construction	
	Omsk SRF Army																								
	BARNAUL DIVISION																						RTP ucon at support cplx. unid nuclear assoc vehicles		
	Base 1	05/82	02/83	9	—	5	3	—	1	—	—	—	1	—	—	—	—	—	—	—	•				
	Base 2	03/83	10/83	9	—	5	3	—	1	—	—	—	1	—	—	—	—	—	—	—	•				
	Base 3	07/83	12/83	9	—	5	3	—	1	—	—	—	1	—	—	—	—	—	—	—	•				
	Base 4	10/83	—	—	—	5	—	3	—	1	—	—	—	1	—	1	—	1	—	1	•			Construction ceased in ops and support areas and NPHF	
	Base 5	07/84	11/84	9	—	5	3	—	—	—	2	—	—	—	—	—	—	—	—	—	•				
	NOVOSIBIRSK DIVISION																						Unid nuclear-assoc vehicles		
	Base 1	01/77	06/78	9	—	4	3	—	—	—	—	—	2	—	—	—	—	—	—	—	•				
	Base 2	12/77	11/78	9	—	4	3	—	—	—	—	—	2	—	—	—	—	—	—	—	•				
	Base 3	06/78	11/79	9	—	4	3	—	—	—	—	—	2	—	—	—	—	—	—	—	•				
	Base 4	12/79	12/80	9	—	4	3	—	—	—	—	—	1	—	—	—	—	—	—	—	•				
	Base 5	10/80	08/81	9	—	4	3	—	—	—	—	—	2	—	—	—	—	—	—	—	•			Deployed FINE PAIR in ops area	
	Base 6	12/81	12/82	9	—	5	3	—	—	—	1	—	1	—	—	—	—	—	—	—	•				
CENTRAL USSR	**Orenburg SRF Army**																								
	VERKHNYAYA SALDA DIVISION																						Complete SBG at RTP		
	Base 1	02/78	01/79	9	—	3	3	—	—	—	—	—	2	—	—	—	—	—	—	—	•			24 housetrailers remain; bldg ucon in support area	
	Base 2	01/79	11/79	9	—	3	3	—	—	—	—	—	2	—	—	—	—	—	—	—	•				
	Base 3	11/79	12/80	9	—	3	3	—	—	—	—	—	1	—	—	—	—	—	—	—	•				
	Base 4	03/80	12/80	9	—	3	3	—	—	—	—	—	—	—	—	—	—	—	—	—	•			C3 exercise was conducted outside support area	
	Base 5	04/81	11/81	9	—	3	3	—	—	—	—	—	1	—	—	—	—	—	—	—	•				
	Vladimir SRF Army																								
	YURYA DIVISION																								
	Base 1	04/78	01/79	—	—	3	3	—	—	—	—	—	1	—	—	—	—	—	—	—	•			All 9 SBGs dismantled by	
	Base 2	01/79	01/80	4	—	3	3	—	—	—	—	—	1	—	—	—	—	—	—	—	•			5 SBGs dismantled	
	Base 3	12/79	12/80	—	—	3	3	—	—	—	—	—	1	—	—	—	—	—	—	—	•			All 9 SBGs dismantled by	
	Base 4	05/80	03/81	9	—	3	3	—	—	—	—	—	1	—	—	—	—	—	—	—	•				
	Base 5	04/81	12/81	—	—	3	3	—	—	—	—	—	1	—	—	—	—	—	—	—	•			All 9 SBGs dismantled by	

25X1

25X1

25X1

25X1

25X1

25X1

25X1

Sanitized Copy Approved for Release 2010/10/19 : CIA-RDP85T00840R000101130001-2

Sanitized Copy Approved for Release 2010/10/19 : CIA-RDP85T00840R000101130001-2

WESTERN USSR

[illegible]lensk [illegible] Army																					
BELOKOROVICHI DIVISION																					
Belokorovichi 1 [redacted]	09/84	—	—	—	4		1	—	—	—	—	—	—	—	—	—	—	—	—	—	[redacted]
[illegible] 1 [redacted]	11/84				4																
Usovo 1 [redacted]	08/84	—	—	—	4		1	—	—	—	—	—	—	—	—	—	—	—	—	—	
[illegible] [redacted]	12/84		—	2	4																
LIDA DIVISION																					
Dyatlovo [redacted]	03/81	01/82	9	—	4	3	—	—	—	—	—	1	—	Dyatlovo NPHF [redacted]							
Lida [redacted]	06/80	05/81	9	—	4	3	—	—	—	—	—	1	—	—	—	—	—	—	—	—	
Pruzhany 1 [redacted]	07/84	—	—	9	4	—	2	—	—	—	—	—	1	—	—	—	—	—	—	—	[redacted]
Ruzhany 1	06/84	—	—	8	4	—	3	—	—	—	—	—	1	—	—	—	—	—	—	—	
Slonim [redacted]	03/81	03/82	9	—	4	3	—	—	—	—	—	1	—	—	—	—	—	—	—	—	
POSTAVY DIVISION																					
Polotsk 1 [redacted]	10/78	01/80	9	—	3	3	—	—	—	—	—	2	—	1	—	1	—	1	—	—	Prob ten-bay garage ucon in support area
Polotsk 2	08/79	01/81	9	—	3	3	—	—	—	—	—	1	—	—	—	—	—	—	—	—	
Postavy [redacted]	10/77	06/78	9	—	3	3	—	—	—	—	—	2	—	1	—	1	—	1	—	—	
Smorgon 1 [redacted]	04/78	01/79	9	—	4	3	—	—	—	—	—	2	—	—	—	1	—	1	—	—	
Smorgon 2	08/79	01/81	9	—	4	3	—	—	—	—	—	1	—	—	—	—	—	—	—	•	
Vinnitsa SRF Army																					
LUTSK DIVISION																					
Brody 1 [redacted]	07/84	12/25	9	—	5		3	—	—	1	—	—	—	—	—	—			—	—	Equip in storage at Brody LP3 (prob for Brody 1). Was not visible
Kivertsy 2 [redacted]	11/81	02/83	9	—	4	3	—	—	—	1	—	1	—	Kivertsy NPHF [redacted]							
Lutsk [redacted]	01/82	06/82	9	—	4	3	—	—	—	—	—	1	—	—	—	—	—	—	—	—	
Ostrog 1 [redacted]	06/84	—	—	6	4	—	3	—	1	—	—	—	—	—	—	—	—	—	—	—	Rectangular slabs in center of 3 SBG foundations; 5 mockups (3 TELs and 2 MSVs) visible
Sokal 1 [redacted]	07/84	—	—	8	4	—	3	—	—	—	—	—	—	—	—	—	—	—	—	—	Base in early stages of construction
MOZYR DIVISION																					
Gresk 1 [redacted]	08/80	05/81	9	—	4	3	—	—	—	—	—	1	—	—	1	—	1	—	1	—	Work halted on NPHF; bldg ucon in support area
Konkovichi 1 [redacted]	11/75	06/78	9	—	3	3	—	—	—	—	—	3	—	1	—	1	—	1	—	—	
Kozhanovichi	07/76	06/78	9	—	3	3	—	—	—	—	—	3	—	1	—	1	—	1	—	—	
Mozyr 1 [redacted]	10/76	06/78	9	—	3	3	—	—	—	—	—	3	—	1	—	1	—	1	—	—	3 bldgs in midstage of construction
Rechitsa	09/78	03/80	—	—	—	—	—	—	—	—	—	2	—	1	—	1	—	1	—	—	
MOB 1A [redacted]	08/79	03/80	3	—	—	—	—	—	—	—	—	—	—	—	—	—	—	—	—	—	
MOB 1B	08/79	03/80	3	—	—	—	—	—	—	—	—	—	—	—	—	—	—	—	—	—	
MOB 1C	08/79	03/80	3	—	—	—	—	—	—	—	—	—	—	—	—	—	—	—	—	—	
ROMNY DIVISION																					
Akhtyrka 1 [redacted]	04/84	—	—	7	4	—	3	—	—	—	—	—	1	—	—	—	—	—	—	—	Base in midstage of construction
Akhtyrka 2	04/84	12/84	9	—	4	3	—	—	—	—	—	1	—	—	—	—	—	—	—	—	
Krolevets 1	12/81	08/82	9	—	4	3	—	—	—	—	—	1	—	—	—	—	1	—	1	—	
Krolevets 2	02/84	11/84	9	—	4	3	—	—	—	—	—	1	—	—	—	—	—	—	—	—	
Lebedin 1 [redacted]	02/81	05/82	9	—	4	3	—	—	—	—	—	1	—	Lebedin NPHF [redacted]							12 camouflaged MSVs being stored in ops area (prob for Akhtyrka 1)

Red indicates changes since [redacted] the cutoff date of the updated report [redacted]

*The former SS-7 ICBM complexes in the central and eastern USSR currently contain NPHFs under construction or complete at their RTPs; each NPHF consists of one high two-bay technical support building and a clerestory building.

This table is classified TOP SECRET RUFF.

Table A2. Summary of Construction at Probable Mobile ICBM Bases as of 31 December 1984

Irkutsk 1 [redacted]	08/83	—	—	—	7	—	1	—	—	—	—	—	—	—	—	—	—	—	—	—	4 bldgs ucon in former support camp
Irkutsk 2	08/83	—	—	—	7	—	3	—	—	—	—	—	—	—	—	—	—	—	—	—	One bldg constructed in support area
Yoshkar-Ola [redacted]	01/84	—	9	—	7	3	0	—	—	—	—	—	—	—	—	—	—	—	—	—	Ops and C3 areas externally complete by [redacted]
Yurya 6 [redacted]	06/84	—	9	—	7	3	0	—	—	—	—	—	—	—	—	—	—	—	—	—	Ops area externally complete by [redacted] C3 area in early stages of construction

This table is classified TOP SECRET RUFF.

Top Secret RUFF [redacted]

ILLEGIB 25X1 25X1 25X1 25X1 25X1 25X1 ILLEGIB 25X1 25X1 25X1 25X1 25X1 25X1 25X1 25X1 25X1 25X1 25X1 25X1 25X1 25X1 25X1 25X1 25X1 25X1 25X1 25X1

Sanitized Copy Approved for Release 2010/10/19 : CIA-RDP85T00840R000101130001-2

Sanitized Copy Approved for Release 2010/10/19 : CIA-RDP85T00840R000101130001-2

Table A3. C3 Activities at Deployed Mobile Missile-Associated Facilities as of 31 December 1984

	C3-Associated Structures and Mobile Antennas									Fixed Antenna Inventory										
	Large C-Shaped C3 Bldg	Small C-Shaped C3 Bldg	Rectangular C3 Bldg	C3 Bunker	11-Bay Garage	Communications Station	Mobile Satellite Communications Unit	Mobile TWIN EAR Unit	Roof-Mounted Antenna Array on C3 Bldg	Lattice Towers	Horizontal Dipole Antenna	FISHBONE Antennas	Rhombic Antennas	Quadrant Antennas	Hardened Antennas	Antenna Masts	STICK PIN Antennas	Retractable Antenna Masts	Mast-Mounted TWIN EAR Antennas	Comments
EASTERN USSR																				
Chita SRF Army																				
DROVYANAYA IC/IRBM DIV																				
CP/bnk [redacted]	—	—	—	1	—	yes	2*	—	—	6	—	3	—	—	—	3	—	—	—	WOOD BINE and PARK DRIVE
CP/alt/bnk [redacted]	—	—	—	1	—	—	—	•	—	2	1	4	—	—	—	2	—	—	2	Occasionally observed
Rad rcvr [redacted]	—	—	—	1	—	—	—	•	—	3	—	—	—	—	2	—	—	—	2	Occasionally observed
Rad xmtr [redacted]	—	—	—	1	—	—	—	—	—	—	4	—	8	—	—	—	—	—	—	
Drovyanaya IRBM Regts																				
Base 1 Hq [redacted]	—	—	1	—	—	—	—	yes	yes	2	—	—	—	—	—	1	—	yes*	—	Two on three-bay garages; FINE PAIR antenna seen here
Base 2 Hq	—	—	1	—	—	—	—	yes	yes	2	—	—	—	—	—	1	—	yes*	—	Two on three-bay garages
Base 3 Hq	—	—	1	—	—	—	—	yes	yes	2	—	—	—	—	—	—	—	yes*	—	Two on three-bay garages
Base 4 Hq	—	—	1	—	—	—	—	yes	yes	4	—	—	—	—	—	—	—	yes*	—	Two on three-bay garages
Base 5 Hq	—	—	1	—	—	—	—	yes	yes	2	2	—	—	—	—	—	—	yes*	—	Two on three-bay garages
KANSK IRBM DIV HQ (no BE No)	—	—	1	—	—	—	2*	—	—	3	4*	—	—	—	—	—	—	—	—	WOOD BINE; mobile HF equipment
Kansk IRBM Regts																				
Base 1 (no BE No)	—	—	1	—	•	—	—	—	yes	2	—	—	—	—	—	—	2	yes*	—	Ten-bay garage; two on five-bay garages
Base 2 (no BE No)	—	—	•	—	•	—	—	—	—	2	—	—	—	—	—	—	—	—	—	Late stages of construction; ten-bay garage
Base 3 (no BE No)	—	—	ucon	—	ucon*	—	—	—	—	—	—	—	—	—	—	—	—	—	—	Ten-bay garage
Base 4* (no BE No)	—	—	—	—	—	—	—	—	—	—	—	—	—	—	—	—	—	—	—	Ucon
Omsk SRF Army																				
BARNAUL IRBM DIV HQ [redacted]	—	—	1	—	—	—	1*	—	yes*	2	—	—	—	—	—	—	1	—	—	WOOD BINE; two roof-mounted antenna arrays
Barnaul IRBM Regts																				
Base 1 Hq [redacted]	—	—	1	—	•	—	—	—	yes	2	—	—	—	—	—	—	—	—	—	Nine-bay garage
Base 2 Hq	—	—	1	—	•	—	—	—	yes	2	—	—	—	—	—	—	2	—	—	Nine-bay garage
Base 3 Hq	—	—	1	—	•	—	—	—	yes	2	—	—	—	—	—	—	2	—	—	One nine-bay and one 11-bay garage
Base 4 Hq (no BE No)	—	—	ucon	—	ucon	—	—	—	—	—	—	—	—	—	—	—	—	—	—	
Base 5 Hq (no BE No)	—	—	ucon	—	•	—	—	—	—	—	—	—	—	—	—	—	—	—	—	Two garages
NOVOSIBIRSK IRBM DIV																				
CP/bnk [redacted]	—	—	—	1	—	—	—	—	—	8	2	1	—	—	—	—	3	—	—	
Rad rcvr [redacted]	—	—	—	1	—	—	—	—	—	1	2	2	—	—	1	1	—	—	—	
Rad xmtr [redacted]	—	—	—	—	—	ucon*	—	—	—	2	7	—	6	—	—	—	—	—	—	Type C satellite commo station
Novosibirsk IRBM Regts																				
Base 1 Hq [redacted]	•	—	1	—	—	—	—	—	yes	2	—	—	—	—	—	—	1	—	—	Construction resumed on this bldg
Base 2 Hq	—	—	1	—	—	—	—	—	yes	2	—	—	—	—	—	—	2	—	—	
Base 3 Hq	—	—	1	—	—	—	—	—	yes	2	—	—	—	—	—	—	2	—	—	
Base 4 Hq	—	—	1	—	—	—	—	—	yes	2	—	—	—	—	—	—	2	—	—	
Base 5 Hq*	—	1	—	—	—	—	—	—	yes	2	—	—	—	—	—	—	1	—	—	FINE PAIR antenna seen here
Base 6 Hq (no BE No)	—	—	1	—	•	—	—	—	yes	2	2	—	—	—	—	—	1	—	—	Ten-bay garage

25X1
25X1
25X1
25X1
25X1
25X1
25X1
25X1
25X1

Secret RUFF

Sanitized Copy Approved for Release 2010/10/19 : CIA-RDP85T00840R000101130001-2

Sanitized Copy Approved for Release 2010/10/19 : CIA-RDP85T00840R000101130001-2

CENTRAL USSR

Orenburg SRF Army

VERKHNYAYA SALDA IRBM DIV																				
CP/bnk	—	—	—	2	—	1*	2*	—	—	9	4	1	—	—	—	—	—	—	—	Type C complete, second WOOD BINE identified
Rad rcvr	—	—	—	1	—	—	—	—	—	3	2	2	—	2	2	—	—	—	2	
Rad xmtr	—	—	—	—	—	—	—	—	—	—	6	—	4	1	—	1	—	—	—	
Verkhnyaya Salda IRBM Regts																				
Base 1 Hq	—	—	1	—	—	—	—	yes	yes	2	—	—	—	—	—	—	—	—	—	
Base 2 Hq	—	—	1	—	—	—	—	yes	yes	2	—	—	—	—	—	—	—	—	—	
Base 3 Hq	—	—	1	—	—	—	—	—	yes	2	—	—	—	—	—	—	—	—	—	
Base 4 Hq	—	1	—	—	—	—	—	—	yes	4	—	—	—	—	—	—	—	—	—	
Base 5 Hq	—	1	—	—	—	—	—	—	yes	2	—	—	—	—	—	—	—	—	—	

Vladimir SRF Army

YOSHKAR-OLA ICBM DIV																				
CP/bnk/hd	—	—	—	2	—	yes	—	—	—	4	2	2	—	—	1	2	2	—	—	
Rad rcvr*	—	—	—	1	—	—	—	—	—	—	—	—	—	—	—	—	—	—	—	Inactive
Rad xmtr	—	—	—	—	—	—	—	—	—	—	7	—	2	—	—	—	—	—	—	
Rad xmtr NE/bnk*	—	—	—	1	—	—	—	—	—	—	3	—	8	—	—	1	—	—	—	
Yoshkar-Ola Mobile Missile Regts																				
Base 1	—	—	ucon	—	•	—	—	—	—	—	—	—	—	—	—	—	—	—	—	**Ten-bay garage**
YURYA IRBM DIV																				
CP/bnk	—	—	—	1	—	1*	—	—	—	9	3	1	—	—	—	2	—	—	—	Type C satellite commo station complete
Rad rcvr	—	—	—	1	—	—	—	—	—	3	8	—	—	—	2	—	—	—	2	
Rad xmtr	—	—	—	—	—	—	—	—	—	—	8	—	—	—	—	4	—	—	—	
Yurya IRBM Regts																				
Base 1 Hq	—	1	—	—	—	—	—	—	yes	2	—	—	—	—	—	—	—	—	—	
Base 2 Hq	—	1	—	—	—	—	—	—	yes	2	—	—	—	—	—	—	—	—	—	
Base 3 Hq*	—	1	—	—	1	—	—	—	yes	2	—	—	—	—	—	—	—	—	—	**R-400/-404 unit identified**
Base 4 Hq	—	1	—	—	—	—	—	—	yes	2	—	—	—	—	—	—	—	—	—	
Base 5 Hq	—	1	—	—	1	—	—	—	yes	2	—	—	—	—	—	—	—	—	—	
Base 6 Hq (no BE No)	—	—	—	—	—	—	—	—	—	—	—	—	—	—	—	—	—	—	—	

WESTERN USSR

Smolensk SRF Army

LIDA IRBM DIV																				
CP/bnk	—	—	—	3	—	Type E	—	—	•	3	4	1	—	—	—	3	3	—	—	Array on bunker
Rad rcvr	—	—	—	—	—	—	—	—	—	—	2	—	2	—	—	2	—	—	—	
Rad xmtr	—	—	—	—	—	—	—	—	—	—	4	—	4*	3	—	1	—	—	—	Two rhombic antennas ucon
Dyatlovo IRBM Regt																				
Base Hq (no BE No)	—	—	1	—	1	—	—	—	yes	2	2	—	—	—	—	—	1	—	—	
Support bunker*	—	—	—	—	—	—	—	—	—	—	—	—	—	—	—	—	—	—	—	**Formerly an MRBM regt CP/bnk (same BE No)**
Rad xmtr	—	—	—	—	—	—	—	—	—	—	4	—	—	2	—	1	—	—	—	
Lida IRBM Regt																				
Base Hq	—	—	1	—	—	—	—	—	yes	2	2	—	—	—	—	—	1	—	—	
Slonim IRBM Regt																				
Base Hq	—	—	1	—	1	—	—	yes	yes	2	2	—	—	—	—	—	—	—	—	
Support bunker*	—	—	—	—	—	—	—	—	—	—	—	—	—	—	—	—	—	—	—	**Formerly an MRBM regt CP/bnk (same BE No)**
Rad xmtr	—	—	—	—	—	—	—	—	—	—	4	—	—	2	—	—	—	—	—	
Ruzhany IRBM Regt																				
Base Hq (no BE No)	—	—	ucon	—	ucon	—	—	—	—	—	—	—	—	—	—	—	—	—	—	
Rad rcvr*	—	—	—	—	—	—	—	—	—	—	4	—	—	2	1	2	—	—	—	**Formerly an MRBM regt rcvr (same BE No)**
Rad Sta*	—	—	—	1	—	—	—	—	—	—	—	—	—	—	—	1	—	—	—	**Formerly an MRBM regt CP/bnk (same BE No)**

25X1

Sanitized Copy Approved for Release 2010/10/19 : CIA-RDP85T00840R000101130001-2

Sanitized Copy Approved for Release 2010/10/19 : CIA-RDP85T00840R000101130001-2

Table A3. C3 Activities at Deployed Mobile Missile-Associated Facilities as of 31 December 1984 (Continued)

	C3-Associated Structures and Mobile Antennas									Fixed Antenna Inventory											
	Large C-Shaped C3 Bldg	Small C-Shaped C3 Bldg	Rectangular C3 Bldg	C3 Bunker	11-Bay Garage	Communications Station	Mobile Satellite Communications Unit	Mobile TWIN EAR Unit	Roof-Mounted Antenna Array on C3 Bldg	Lattice Towers	Horizontal Dipole Antenna	FISHBONE Antennas	Rhombic Antennas	Quadrant Antennas	Hardened Antennas	Antenna Masts	STICK PIN Antennas	Retractable Antenna Masts	Mast-Mounted TWIN EAR Antennas	Comments
WESTERN USSR																				
Pruzhany IRBM Regt																				
Base Hq (no BE No)	—	—	ucon	—	ucon	—	—	—	—	—	—	—	—	—	—	—	—	—	—	
Rad rcvr*	—	—	—	1	—	—	—	—	—	—	2	—	—	2	1	2	—	—	—	Formerly an MRBM regt rcvr (same BE No)
Rad sta*	—	—	—	1	—	—	—	—	—	—	—	—	—	—	—	—	—	—	—	Formerly an MRBM regt CP/bnk (same BE No)
POSTAVY IRBM DIV																				
CP/bnk	—	—	—	3	—	1	—	—	—	4	4	—	—	1	—	8	—	3	—	
Rad rcvr	—	—	—	1	—	—	—	—	—	5	—	—	—	—	—	—	—	—	3	
Rad xmtr	—	—	—	—	—	—	—	—	—	—	10	—	—	2	—	6	—	—	—	
Polotsk IRBM Regt																				
Base 1 Hq*	—	—	1	—	—	—	—	—	—	—	2	—	—	—	—	3	—	—	—	Formerly an MRBM regt CP/bnk (same BE No)
Base 2 Hq	—	1	—	—	1	—	—	—	yes	—	2	—	—	—	—	1	—	—	—	
Rad xmtr	—	—	—	—	—	—	—	—	—	—	6	—	—	—	—	1*	—	—	—	Mast supports FORK REST antennas
Postavy IRBM Regt																				
Base Hq*	1*	—	—	1	—	—	—	—	—	—	2	—	—	—	—	2	—	—	—	Former MRBM regt CP/bnk (same BE No); unid bnk ucon behind bldg; FINE PAIR antenna seen here.
Smorgon IRBM Regt																				
Base 1 Hq*	—	—	1	—	—	—	—	—	—	2	2	—	—	—	—	1	—	—	—	Formerly an MRBM regt CP/bnk (same BE No)
Base 2 Hq	—	1	—	—	1	—	—	—	yes	2	2	—	—	—	—	1	1	—	—	
Rad xmtr	—	—	—	—	—	—	—	—	—	—	8	—	—	1	—	1	—	—	—	
Vinnitsa SRF Army																				
LUTSK MR/IRBM DIV																				
CP/bnk	—	—	—	3	—	—	—	—	*	3	4	1	—	—	*	4	3	—	—	Array ucon on bunker; modified dome antenna ucon
Rad rcvr	—	—	—	1	—	—	—	—	—	—	2	—	2	2	2	3*	—	—	—	Two masts support FORK REST antennas
Rad xmtr	—	—	—	—	—	—	—	—	—	—	5	—	4	2	—	3	—	—	—	
Ostrog IRBM Regt																				
Base Hq (no BE No)	—	—	ucon	—	ucon	—	—	—	—	—	—	—	—	—	—	—	—	—	—	
Rad sta*	—	—	—	1	—	—	—	—	—	—	2	—	—	—	—	3	—	—	—	Formerly an MRBM regt CP/bnk (same BE No)
Kivertsy IRBM Regt																				
Base Hq	—	—	1	—	*	—	—	—	yes	2	2	—	—	—	—	—	—	—	—	Ten-bay garage
Rad sta*	—	—	—	1	—	—	—	—	—	—	1	—	—	—	—	1	—	—	—	Formerly an MRBM regt CP/bnk (same BE No)
Brody IRBM Regt																				
Base Hq (no BE No)	—	—	ucon	—	ucon	—	—	—	—	—	—	—	—	—	—	—	—	—	—	
Sokal IRBM Regt																				
Base Hq (no BE No)	—	—	ucon	—	ucon	—	—	—	—	—	—	—	—	—	—	—	—	—	—	
Lutsk IRBM Regt																				
Base Hq (no BE No)	—	—	1	—	1	—	—	—	yes	2	2	—	—	—	—	—	2	—	—	
Rad sta*	—	—	—	1	—	—	—	—	—	—	—	—	—	—	—	2	—	—	—	Formerly an MRBM regt CP/bnk (same BE No)
MOZYR IRBM DIV																				
CP/bnk	—	—	—	3	—	Type A	—	—	—	—	2	—	—	—	—	3	—	—	3	Prob computer bldg near bunkers
Rad rcvr	—	—	—	1	—	—	—	—	—	—	4	—	—	2	2	3*	—	—	—	Two masts support FORK REST antennas
Rad xmtr	—	—	—	—	—	Type E	—	*	—	—	7	—	—	2	—	4*	—	—	—	Occasionally observed; two masts support FORK REST antennas

25X1

Sanitized Copy Approved for Release 2010/10/19 : CIA-RDP85T00840R000101130001-2

Sanitized Copy Approved for Release 2010/10/19 : CIA-RDP85T00840R000101130001-2

Gresk IRBM Regt																					
Base Hq [redacted]	—	1	—	—	1	—	—	—	—	—	2	—	—	—	—	2*	—	—	1	Log periodic atop one mast	25X1
Radcom sta* [redacted]	—	—	—	1	—	—	—	—	—	—	1	—	—	—	—	1	—	—	—	Formerly an IRBM regt CP/bnk (same BE No)	25X1
Rad rcvr [redacted]	—	—	—	1	—	—	—	—	—	—	2	—	—	—	1	2	—	—	—		25X1
Rad xmtr	—	—	—	—	—	—	—	—	—	—	5	—	2	—	—	1	—	—	—		
Konkovichi IRBM Regt																					
Base Hq* [redacted]	1	—	—	1	1	—	—	—	—	—	2	—	—	—	—	3	—	—	—	Formerly an MRBM regt CP/bnk (same BE No)	25X1
Rad xmtr	—	—	—	—	—	—	—	—	—	—	8	—	—	•	—	—	—	—	—	One prob quadrant antenna	
Kozhanovichi IRBM Regt																					
Base Hq [redacted]	1	1	—	—	1	—	—	—	—	—	2	—	—	—	—	1	—	—	—		25X1
Rad sta*	—	—	—	1	—	—	—	—	—	—	—	—	—	—	—	2	—	—	—	Formerly an MRBM regt CP/bnk (same BE No)	
Rad rcvr	—	—	—	1	—	—	—	—	—	—	—	—	—	—	—	—	—	—	—		
Rad xmtr	—	—	—	—	—	—	—	—	—	—	8	—	—	2	—	2	—	—	—		
Mozyr IRBM Regt																					
Base Hq [redacted]	1	1	—	—	—	—	—	—	—	—	2	—	—	—	—	—	—	—	—		25X1
Rechitsa IRBM Regt																					
Base Hq [redacted]	1	1	—	—	—	—	—	—	—	—	2	—	—	—	—	—	—	—	—		25X1
ROMNY IR/MRBM DIV																					
CP/bnk [redacted]	—	—	—	3	—	Type E	—	—	•	3	2	2	—	—	•	—	—	—	—	Array on C3 bunker; modified dome antenna ucon	25X1
Rad rcvr [redacted]	—	—	—	1	—	—	—	—	—	3	—	—	—	—	—	—	—	—	3		25X1
Rad xmtr [redacted]	—	—	—	—	—	—	—	—	—	—	—	—	—	—	—	—	—	—	—	Antenna field being upgraded; unid bldgs ucon	25X1
Krolevets IRBM Regt																					
Base 1 Hq (no BE No)	—	—	1*	—	1	—	—	—	yes	2	2	—	—	—	—	—	2	—	—	Unid construction; FINE PAIR antenna seen here	
Base 2 Hq* (no BE No)	—	—	1	—	1	—	—	—	yes	1	—	—	—	—	—	—	—	—	—		
Rad sta* [redacted]	—	—	—	1	—	—	—	—	—	—	—	—	—	—	—	1	—	—	—	Formerly an MRBM regt CP/bnk (same BE No)	25X1
Rad xmtr [redacted]	—	—	—	—	—	—	—	—	—	—	6	—	—	—	—	2	—	—	—		25X1
Lebedin IRBM Regt																					
Base Hq* [redacted]	—	—	—	2	1	—	—	—	—	2	—	—	—	—	—	—	1	—	—	Unid bldg ucon	25X1
Akhtyrka IRBM Regt																					
Base Hq 1 (no BE No)	—	—	ucon	—	ucon	—	—	—	—	—	—	—	—	—	—	—	—	—	—		
Base Hq 2 (no BE No)	—	—	ucon	—	ucon	—	—	—	—	—	—	—	—	—	—	—	—	—	—		
Rad sta* [redacted]	—	—	—	1	—	—	—	—	—	—	1	—	—	—	—	2	—	—	—	Formerly an MRBM regt CP/bnk (same BE No)	
Rcvr/bnk* [redacted]	—	—	—	2	—	—	—	—	—	—	6	—	—	—	1	2	—	—	—	Formerly an MRBM regt Rcvr/bnk (same BE No)	25X1
Rad xmtr*	—	—	—	—	—	—	—	—	—	—	6	—	—	—	—	5	—	—	—	Formerly an MRBM regt xmtr (same BE No)	
BELOKOROVICHI MR/IRBM DIV																					
CP/bnk [redacted]	—	—	—	3	—	—	—	—	—	—	4	—	—	—	—	1	—	—	—		25X1
Rad rcvr [redacted]	—	—	—	1	—	—	—	—	—	—	2	—	2	2	—	2	—	—	—		25X1
Rad xmtr [redacted]	—	—	—	—	—	—	—	—	—	—	7	—	—	—	—	3	—	—	—		25X1
Usovo IRBM Regt																					
Base Hq (no BE No)	—	—	ucon	—	ucon	—	—	—	—	—	—	—	—	—	—	—	—	—	—		
Belokorovichi IRBM Regt																					
Base Hq (no BE No)	—	—	ucon	—	ucon	—	—	—	—	—	—	—	—	—	—	—	—	—	—		
Zhitomir IRBM Regt																					
CP/bnk* [redacted]	—	—	—	1	—	—	—	—	—	—	2	—	—	—	—	4	—	—	—	Formerly an MRBM regt CP/bnk (same BE No)	25X1
Rcvr/bnk* [redacted]	—	—	—	1	—	—	—	—	—	—	2	—	—	—	1	3	—	—	—	Formerly an MRBM regt rcvr/bnk (same BE No)	25X1
Korosten IRBM Regt																					
Base Hq (no BE No)	—	—	ucon	—	ucon	—	—	—	—	—	—	—	—	—	—	—	—	—	—		
Rad sta* [redacted]	—	—	—	1	—	—	—	—	—	—	2	—	—	—	—	2	—	—	—	Formerly an MRBM regt CP/bnk (same BE No)	25X1

All deactivated facilities have been dropped from this table.

Darker shading denotes facilities providing onsite support for mobile bases.

Red indicates changes since [redacted] the cutoff date of the updated report. [redacted] 25X1

*See Comments.

This table is classified TOP SECRET RUFF.

Top Secret RUFF

Sanitized Copy Approved for Release 2010/10/19 : CIA-RDP85T00840R000101130001-2

Sanitized Copy Approved for Release 2010/10/19 : CIA-RDP85T00840R000101130001-2

25X1
25X1

A2. Figure A7 shows the relation between the estimated date of completion and the date of the arrival of SS-20 equipment at existing mobile IRBM bases. The figure expresses dates by the year and the quarter in which construction was begun and completed. The average time necessary to construct a mobile IRBM base is approximately 10.8 months. SS-20 equipment has been visible at most bases in either the final quarter of construction or the quarter immediately following completion. (S/WN)

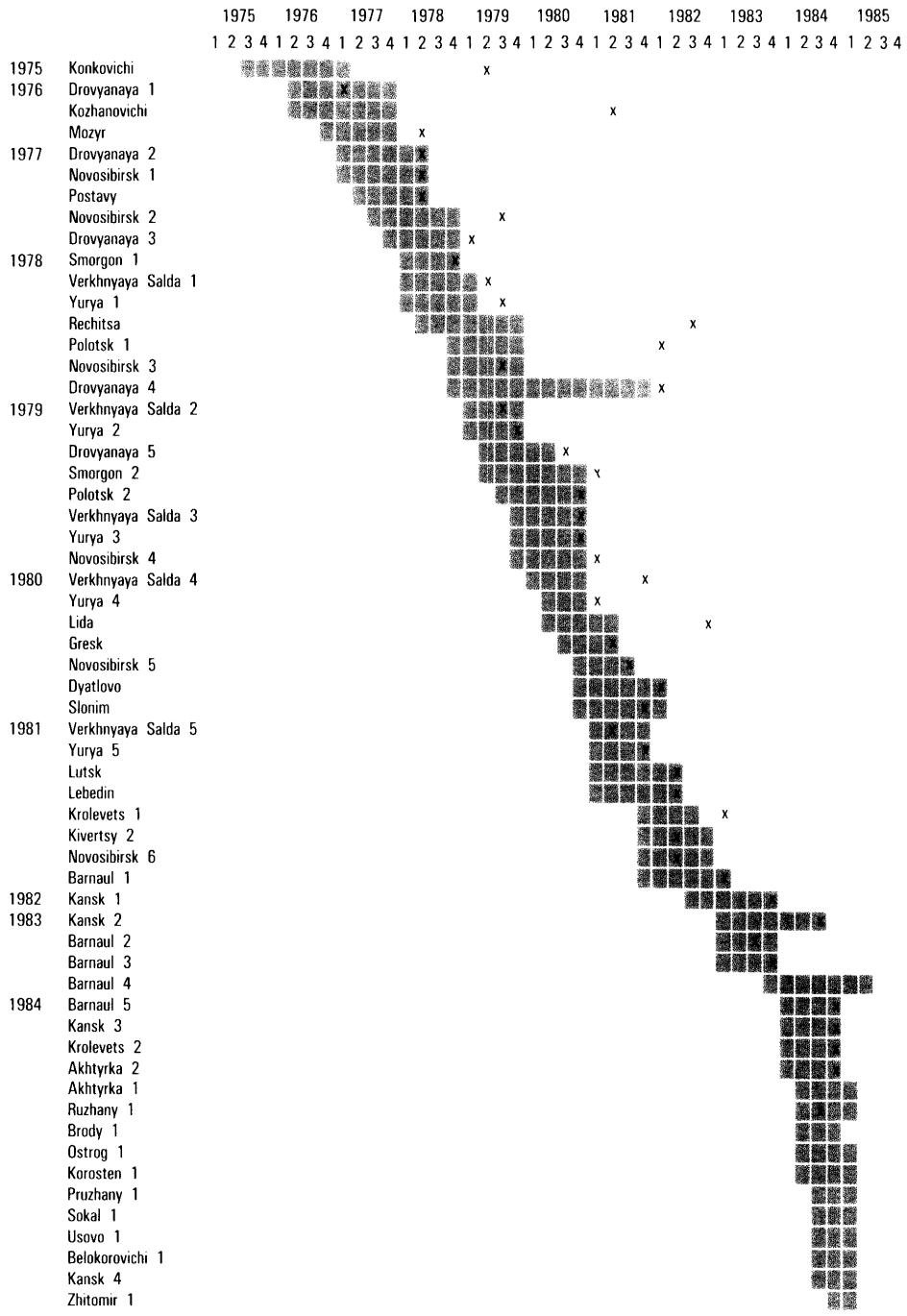

SECRET/WNINTEL

FIGURE A7. SS-20 BASES: DURATION OF CONSTRUCTION AND ARRIVAL OF SS-20 EQUIPMENT

25X1
25X1

Sanitized Copy Approved for Release 2010/10/19 : CIA-RDP85T00840R000101130001-2

Sanitized Copy Approved for Release 2010/10/19 : CIA-RDP85T00840R000101130001-2

Page Denied

Next 1 Page(s) In Document Denied

Sanitized Copy Approved for Release 2010/10/19 : CIA-RDP85T00840R000101130001-2

Sanitized Copy Approved for Release 2010/10/19 : CIA-RDP85T00840R000101130001-2

 25X1
25X1

Table A5.
SRBM Launch Units—SCALEBOARD (SS-12) Brigades

Installation/BE No	Geographic Coordinates	Remarks
[redacted]		
CZECHOSLOVAKIA		
Hranice Bks Maehrisch 002/Hq SCUD Bde [redacted]	49-33-50N 017-44-45E	One bn
Libava Unid Mil Constr Site 2 [redacted]	49-36-33N 017-32-45E	Two bn
LENINGRAD MD		
Lomonosov Army Barracks [redacted]	59-53-40N 029-46-40E	SCALEBOARD unit
BELORUSSIAN MD		
Lapichi Army Bks Osipovichi AL 1 [redacted]	53-25-34N 028-29-54E	
TURKESTAN MD		
Kurgancha SSM Launch Position 6 [redacted]	39-36-48N 065-52-58E	
CENTRAL ASIAN MD		
Sary-Ozek IRBM Launch Site 1 [redacted]	44-31-36N 077-46-25E	
TRANS-BAIKAL MD		
Drovyanaya SCALEBOARD Bde Hq/ Bks AL 1 [redacted]	51-33-04N 113-01-52E	
FAR EAST MD		
Novosysoyevka SSM Launch Position 1 [redacted]	44-12-03N 133-26-20E	
SIBERIAN MD		
Novosibirsk Tactical SSM Support Fac [redacted]	55-16-05N 082-59-58E	

25X1
25X1
25X1
25X1
25X1
25X1
25X1
25X1
25X1

This table is SECRET/WNINTEL

Table A6.
SRBM Launch Units—SCUD B (SS-1C) Brigades*

Installation/BE No	Geographic Coordinates	Remarks**
[redacted]		

25X1

25X1

 25X1

Sanitized Copy Approved for Release 2010/10/19 : CIA-RDP85T00840R000101130001-2

Sanitized Copy Approved for Release 2010/10/19 : CIA-RDP85T00840R000101130001-2

25X1
25X1

Table A6. (Continued)

Installation/BE No	Geographic Coordinates	Remarks**

25X1

LENINGRAD MD

Kuyvozi Tac SSM Bks A Stor AL 5	60-13-58N 030-26-37E	MD
Luga Army Bks S AL 2	58-41-02N 029-50-01E	MD
Pinozero Tac SSM Bks AL 1	67-19-23N 032-28-57E	6th Army

25X1
25X1
25X1

BALTIC MD

Dolgorukovo Tac SSM A Army Bks AL 1	54-24-47N 020-31-13E	11th Gds Army

25X1

BELORUSSIAN MD

Dzerzhinsk Tac SSM Bks SE AL 2/SA-4	53-38-26N 027-12-47E	MD
Lapichi Tac SSM Bks Tsel AL 2	53-23-49N 028-28-08E	Active (5th Gds Tank Army) and reserve bde
Pruzhany SSM Fac and Army Bks AL 1	52-30-57N 024-31-04E	28th Army
Lepel Tac SSM Bks AL 7	54-58-05N 028-49-22E	7th Tank Army

25X1
25X1
25X1
25X1

CARPATHIAN MD

Nesterov Army Bks AL 1	50-03-06N 023-58-45E	MD
Yemilchino Army Bks AL 1	50-52-08N 027-48-16E	8th Tank Army
Kremenets Army Bks AL 1	50-08-59N 025-45-40E	13th Army

25X1
25X1
25X1

ODESSA MD

Raukhovka Tac SSM Bks AL 1	47-09-55N 030-48-40E	Active (MD) and reserve bde, reserve bde poss out of garrison

25X1

25X1

25X1

Sanitized Copy Approved for Release 2010/10/19 : CIA-RDP85T00840R000101130001-2

Sanitized Copy Approved for Release 2010/10/19 : CIA-RDP85T00840R000101130001-2

Table A6. (Continued)

Installation/BE No	Geographic Coordinates	Remarks**
Berezino Army Bks/Tac SSM Sp Fac AL 1 [redacted]	46-13-51N 029-11-55E	MD
Bendery Army Bks Citadel AL 2 [redacted]	46-50-21N 029-29-02E	14th Army
NORTH CAUCASUS MD		
Maykop SSM Launch Position 3 [redacted]	44-31-42N 040-00-45E	MD
Krasnodar Bks AL 8 [redacted]	45-05-25N 038-59-05E	MD
TRANSCAUCASUS MD		
Shaumyani Tac SSM Bks AL 1 [redacted]	41-19-30N 044-44-48E	MD
Stepanavan Tac SSM Bks SE AL 1 [redacted]	41-00-22N 044-23-15E	7th Gds Army
Baku Army Bks AL 16 [redacted]	40-28-45N 049-35-20E	4th Army
KIEV MD		
Kremenchug Tac SSM Bks AL 2 [redacted]	49-05-54N 033-25-34E	Active (MD) and poss reserve bde
Belaya Tserkov Army Bks AL 2 [redacted]	49-49-38N 030-04-56E	Active (1st Gds Army) and poss reserve bde
Kirovograd Tac SSM Bks AL 3 [redacted]	48-32-29N 032-15-57E	Active (6th Tank Army) and poss reserve bde
MOSCOW MD		
Shuya Army Bks East AL 1 [redacted]	56-50-29N 041-22-56E	Current SRBM unknown
TURKESTAN MD		
Bayram-Ali Tac SSM SCUD Bks AL 1/TA 1 [redacted]	37-36-20N 062-10-32E	Active (MD) and reserve bde
CENTRAL ASIAN MD		
Semipalatinsk AB AL 1/Hq Arty Div/SA-8 [redacted]	50-23-15N 080-10-23E	MD
TRANS-BAIKAL MD		
Ulan-Ude Army Hq AL 1 [redacted]	51-53-45N 107-31-33E	Unlocated
Nerchinsk Tac SSM Bks AL 1 [redacted]	51-59-15N 116-35-26E	36th Army
FAR EAST MD		
Birobidzhan MRD Hq/Bks AL 1 [redacted]	48-47-01N 132-53-05E	
Belogorsk SCUD Bde Hq/AL 5 [redacted]	50-55-04N 128-22-24E	35th Army
Anastasyevka Army Bks AL 3 [redacted]	48-36-02N 135-35-49E	
Spassk-Dalniy SCUD Bde Hq SSM Bks AL 3 [redacted]	44-35-26N 132-49-13E	
Razdolnoye SCUD Bde Bks AL-1/ SA-4 Spt [redacted]	43-31-23N 131-54-19E	5th Army
SIBERIAN MD		
Krasnoyarsk Tac SSM Fac AL 9 [redacted]	56-18-43N 093-00-37E	MD
Krasnoyarsk Army Bks AL 2/ TA 1 [redacted]	56-03-02N 092-55-51E	

*Designators extracted from NDHQ Ottawa, *Order of Battle—Soviet Ground Forces, 1983*, 29 Sep 83 (TOP SECRET [redacted] 25X1
[redacted] 25X1

**When less than the entire brigade has been confirmed at an installation, only the confirmed number of battalions is indicated.

This table is TOP SECRET [redacted] 25X1

Sanitized Copy Approved for Release 2010/10/19 : CIA-RDP85T00840R000101130001-2

Sanitized Copy Approved for Release 2010/10/19 : CIA-RDP85T00840R000101130001-2

Table A7.
SRBM Schools

Installation/BE No	Geographic Coordinates	Function	Remarks	
Kazan Army School [redacted]	55-47-50N 049-10-50E	School	Kazan Higher Military Engineer School	25X1
Vysokaya Army Bks AL 1 [redacted]	55-57-36N 049-20-32E	Training area	SCALEBOARD/SCUD/FROG officer tng	25X1
Saratov Higher Military Command School [redacted]	51-34-16N 046-00-55E	School	Saratov Higher Military Command School	25X1
Ivanovsky Army Bks AL 1 [redacted]	51-21-27N 45-37-22E	Training area	SCALEBOARD/SCUD/FROG command tng	25X1
Kolomna Tac SSM Sup Fac [redacted]	50-02-39N 038-51-40E	Training area	Kolomna Higher Artillery Command School, rear services	25X1
Luga Army Bks AL 1 [redacted]	58-45-06N 029-49-26E		SCALEBOARD/SCUD/SS-21/FROG specialist tng	25X1
Kamenka Military Installation [redacted]	53-11-40N 044-03-30E		SCALEBOARD specialist tng	25X1
Staryy Medved Army Bks AL 1 [redacted]	58-18-19N 030-30-34E		SCUD specialist tng	25X1
Ostrogozhsk Army Bks [redacted]	50-52-08N 039-03-38E		Driver tng	25X1

This table is SECRET/WNINTEL

Table A8.
SRBM Logistics—Central Facilities

Installation/BE No	Geographic Coordinates	
MISSILE AIRFRAME FACILITIES		
Rybinsk Tac SSM Spt Fac [redacted]	58-01-15N 038-52-48E	25X1
Mozhaysk Prob Tac SSM Spt Fac [redacted]	55-28-40N 036-03-15E	25X1
Kirzhach Tac SSM Spt Fac [redacted]	56-06-10N 038-44-55E	25X1
Dzerzhinsk Tac SSM Spt Fac [redacted]	56-15-27N 043-13-58E	25X1
Lipetsk Tac SSM Spt Fac [redacted]	52-31-11N 039-45-01E	25X1
Balakleya Tac SSM Spt Fac [redacted]	49-28-21N 036-52-25E	25X1
WEAPONS REPAIR BASES		
Balakleya Ordnance Depot Central [redacted]	49-27-38N 036-50-58E	25X1
Moskva Ord Dpo DO 1 [redacted]	55-51-22N 037-42-33E	25X1
RESERVE ARMAMENT AND EQUIPMENT DEPOTS		
Bologoye Tac SSM Spt Fac [redacted]	57-43-49N 033-58-17E	25X1
Irkutsk Ord Dpo Batareynaya DO 1 [redacted]	52-22-57N 104-09-25E	25X1

This table is SECRET/WNINTEL

Sanitized Copy Approved for Release 2010/10/19 : CIA-RDP85T00840R000101130001-2

Sanitized Copy Approved for Release 2010/10/19 : CIA-RDP85T00840R000101130001-2

25X1
25X1

Table A9.
SRBM Logistics—GOF/MD/Front Materiel Support

Installation/BE No	Geographic Coordinates	Missile-Technical Unit	Function (Subordination*)
LENINGRAD MD			
Parakhino-Poddubye Tac SSM Spt Fac	58-28-58N 033-29-25E	FPRTB	RTB (MD/front)
Kuyvozi Tac SSM Bks A Stor AL 5	60-13-58N 030-26-37E	FPRTB	RTB (MD/front), SCUD bde
Novaya Ladoga Tac SSM Spt Fac	60-05-20N 032-19-05E	PRTB-ORPD	RTB (Army)
Kandalaksha Tac SSM Bks A Stor AL 5	67-12-03N 032-19-37E	PRTB-ORPD	RTB (6th Army)
BALTIC MD			
Kaliningrad Tac SSM Spt Fac	54-35-25N 020-12-46E	FPRTB	RTB (MD/front)
Radviliskis Tac SSM Spt Fac	55-46-30N 023-36-15E	FPRTB	RTB (MD/front)
Kedainiai Tac SSM Spt Fac	55-16-21N 023-52-00E	PRTB-ORPD	RTB (11th GDS Army)
BELORUSSIAN MD			
Bronnaya Gora Tac SSM Spt Fac	52-37-23N 025-04-08E	FPRTB	RTB (MD/front)
Vyshkov Tac SSM Spt Fac	52-27-29N 031-33-22E	FPRTB	RTB (MD/front)
Dzerzhinsk Tac SSM Spt Fac	53-35-56N 027-14-03E		RTB (Army), MD/front SCUD bde

25X1
25X1
25X1
25X1
25X1
25X1
25X1
25X1
25X1
25X1
25X1
25X1

Sanitized Copy Approved for Release 2010/10/19 : CIA-RDP85T00840R000101130001-2

Sanitized Copy Approved for Release 2010/10/19 : CIA-RDP85T00840R000101130001-2

Table A9. (Continued)

Installation/BE No	Geographic Coordinates	Missile-Technical Unit	Function (Subordination*)	
Dzerzhinsk Tac SSM Bks AL 2/ SA-4 ([redacted]	53-38-26N 027-12-47E	FPRTB, poss ORPD	MD/front SCUD bde	25X1
[redacted]				25X1
Lepel Tac SSM Spt Fac [redacted]	54-58-17N 028-47-00E		RTB (7th Tank Army)	25X1
Lepel Tac SSM Bks AL 7 [redacted]	54-58-05N 028-49-22E	PRTB-ORPD	(7th Tank Army)	25X1
Osipovichi Tac SSM Spt Fac [redacted]	53-19-25N 028-48-05E		RTB (5th Gds Tank Army)	25X1
Osipovichi Army Bks NE AL 1 [redacted]	53-18-18N 028-39-28E	PRTB-ORPD	(5th Gds Tank Army)	25X1
CARPATHIAN MD				
Shepetovka Tac SSM Spt Fac [redacted]	50-14-45N 026-59-10E	FPRTB	RTB (MD/front)	25X1
Vinnitsa Tac SSM Spt Fac [redacted]	49-24-16N 028-30-52E	FPRTB	RTB (MD/front)	25X1
Vladimir-Volynskiy Tac SSM Spt Fac [redacted]	50-47-55N 024-16-30E		RTB (13th Army)	25X1
Vladimir-Volynskiy Tac SSM Bks AL 3 [redacted]	50-51-27N 024-18-30E	PRTB-ORPD	(13th Army)	25X1
[redacted]				25X1
Staro-Konstantinov Tac SSM Bks AL 5 [redacted]	49-45-40N 027-10-09E	PRTB-ORPD	(8th Tank Army)	25X1
Sambor Tac SSM Spt Fac [redacted]	49-28-18N 023-15-07E	PRTB-ORPD	(38th Army)	25X1
Uzhgorod Tac SSM Spt Fac [redacted]	48-36-13N 022-21-50E	PRTB	(Army)	25X1
ODESSA MD				
Kolbasna Tac SSM Spt Fac [redacted]	47-45-37N 029-12-47E	FPRTB-ORPD	RTB (MD/front), SCUD bde	25X1
Balta Army Bks AL 1 [redacted]	47-56-42N 029-36-11E	ORPD	(MD/front)	25X1
Veselyy Kut Tac SSM Spt Fac [redacted]	46-04-32N 029-17-27E	PRTB	RTB (Army)	25X1
Sarata Tac SSM Spt Fac [redacted]	46-03-30N 029-39-15E	PRTB	RTB (14th Army)	25X1
NORTH CAUCASUS MD				
Mozdok Tac SSM Spt Fac [redacted]	43-44-37N 044-32-08E	FPRTB	RTB (MD/front)	25X1
Tikhoretsk Tac SSM Spt Fac [redacted]	45-53-07N 040-02-35E	none	RTB (Army)	25X1
TRANSCAUCASUS MD				
Kilyazi Tac SSM Spt Fac [redacted]	40-49-06N 049-20-48E	FPRTB	RTB (MD/front)	25X1
Tbilisi Tac SSM Bks Koda AL 4 [redacted]	41-34-18N 044-46-43E	ORPD	(MD/front)	25X1
Stepanavan Tac SSM Spt Fac [redacted]	40-58-21N 044-23-30E	PRTB	RTB (7th Gds Army)	25X1
[redacted]				25X1
Baku Army Bks AL 19 [redacted]	40-42-29N 049-28-31E	PRTB	(4th Army)	25X1
KIEV MD				
Lozovaya Tac SSM Spt Fac [redacted]	48-54-33N 036-21-44E	FPRTB	RTB (MD/front)	25X1
Bogdanovka Tac SSM Spt Fac [redacted]	48-46-41N 032-30-29E	FPRTB	RTB (MD/front)	25X1

[redacted] 25X1

Sanitized Copy Approved for Release 2010/10/19 : CIA-RDP85T00840R000101130001-2

Sanitized Copy Approved for Release 2010/10/19 : CIA-RDP85T00840R000101130001-2

Table A9. (Continued)

Installation/BE No	Geographic Coordinates	Missile-Technical Unit	Function (Subordination*)	
Kirovograd Tac SSM Spt Fac [redacted]	48-31-59N 032-27-54E	PRTB-ORPD	RTB (6th Tank Army)	25X1
Uman Tac SSM Spt Fac [redacted]	48-44-03N 030-03-08E		RTB (1st Gds Army)	25X1
MOSCOW MD				
Karachev Tac SSM Spt Fac [redacted]	53-08-26N 034-56-50E	FPRTB	RTB (MD/front)	25X1
TURKESTAN MD				
Mary Tac SSM Spt Fac [redacted]	37-34-22N 061-47-40E		RTB (MD/front)	25X1
Mary SAM Spt Fac [redacted]	37-28-02N 062-03-54E	FPRTB-ORPD	(MD/front)	25X1
Kurgancha SSM Position 6 [redacted]	39-36-48N 065-52-58E		RTB (MD/front), SCALEBOARD bde	25X1
Nebit-Dag Tac SSM Spt Fac [redacted]	39-26-08N 054-26-21E		RTB (Army)	25X1
Nebit-Dag Tac SSM Bks AL 2 [redacted]	39-29-52N 054-21-35E	PRTB	(Army)	25X1
CENTRAL ASIAN MD				
Arys Tac SSM Spt Fac [redacted]	42-28-04N 068-49-58E	FPRTB	RTB (MD/front)	25X1
Sary-Ozek IRBM Launch Site 1 [redacted]	44-31-36N 077-46-25E	FPRTB	RTB (MD/front), SCALEBOARD bde	25X1
Kapchagay Tac SSM Spt Fac/ SA-4 [redacted]	43-54-18N 077-00-58E		RTB (Army)	25X1
Ili Army Bks AL 1 [redacted]	43-52-33N 077-02-11E	PRTB-ORPD	(Army)	25X1
Semipalatinsk AB AL 1/Hq Arty Div/SA-8 [redacted]	50-23-15N 080-10-23E	PRTB		25X1
TRANS-BAIKAL MD				
Ulan-Ude Tac SSM Spt Fac [redacted]	51-50-16N 107-48-23E	FPRTB	RTB (MD/front)	25X1
Drovyanaya SSM Launch Position 2 [redacted]	51-24-59N 113-04-38E		RTB (MD/front), SCALEBOARD bde	25X1
Drovyanaya SCALEBOARD Bde Hq/Bks AL 1 [redacted]	51-33-04N 113-01-52E	FPRTB	(MD/front), SCALEBOARD bde	25X1
Kyakhta Tac SSM Spt Fac [redacted]	50-23-33N 106-24-07E	ORPD	RTB (29th Army)	25X1
Kyakhta Army Bks N AL 2 [redacted]	50-22-28N 106-25-24E	PRTB	(29th Army)	25X1
Aga Tac SSM Spt Fac [redacted]	51-04-31N 115-10-22E	PRTB-ORPD	RTB (36th Army)	25X1
Ulan-Ude Army Hq AL 1 [redacted]	51-53-45N 107-31-33E	PRTB		25X1
FAR EAST MD				
Zavitinsk Tac SSM Spt Fac [redacted]	50-09-37N 129-26-53E	FPRTB	RTB (MD/front)	25X1
Mengon Tac SSM Spt Fac [redacted]	50-01-04N 136-27-07E	FPRTB	RTB (MD/front)	25X1
Novosysoyevka SSM Launch Position 1 [redacted]	44-12-03N 133-26-20E	FPRTB	RTB (MD/front), SCALEBOARD bde	25X1
Belogorsk SCUD Bde Hq/AL 5 [redacted]	50-55-04N 128-22-24E	PRTB-ORPD	RTB (35th Army)	25X1
Krasnyy Kut Tac SSM Spt Fac [redacted]	44-31-52N 132-49-55E	PRTB-ORPD	RTB (Army)	25X1
Ussuriysk Tac SSM Spt Fac [redacted]	43-41-39N 131-59-00E		RTB (5th Army)	25X1
Razdolnoye SCUD Bde Bks AL 1/ SA-4 Spt [redacted]	43-31-23N 131-54-19E	PRTB	(5th Army)	25X1

Sanitized Copy Approved for Release 2010/10/19 : CIA-RDP85T00840R000101130001-2

Sanitized Copy Approved for Release 2010/10/19 : CIA-RDP85T00840R000101130001-2

 25X1 25X1

Table A9. (Continued)

Installation/BE No	Geographic Coordinates	Missile-Technical Unit	Function (Subordination*)
Maykhe Tac SSM Spt Fac [redacted]	43-26-27N 132-27-29E	PRTB-ORPD	RTB (Army)
Listvenichnoye Tac SSM Bks AL 1 [redacted]	46-51-51N 142-46-27E		RTB (Army)
Petropavlovsk Tac SSM Spt Fac [redacted]	53-05-53N 158-43-12E		RTB
SIBERIAN MD			
Novosibirsk SSM Launch Position 1 [redacted]	55-18-50N 083-01-52E		RTB (MD/front), SCALEBOARD bde
Novosibirsk Tac SSM Spt Fac [redacted]	55-16-05N 082-59-58E	FPRTB	(MD/front), SCALEBOARD bde
Krasnoyarsk Tac SSM Fac AL 9 [redacted]	56-18-43N 093-00-37E	FPRTB	(MD/front), SCUD bde
Krasnoyarsk Army Bks AL 2/TA 1 [redacted]	56-03-02N 092-55-51E	PRTB	(Army)
URAL MD			
Sverdlovsk Tac SSM Spt Fac [redacted]	56-59-14N 060-46-48E	FPRTB	RTB (MD/front)
VOLGA MD			
Syzran Tac SSM Spt Fac [redacted]	53-08-54N 048-21-18E	FPRTB	RTB (MD/front)
Kamenka Military Installation [redacted]	53-11-40N 044-03-30E	PRTB	Cadre

25X1 25X1 25X1 25X1 25X1 25X1 25X1 25X1 25X1

*Designators extracted from [redacted] *Order of Battle—Soviet Ground Forces, 1983*, 29 Sep 83 (TOP SECRET [redacted] 25X1 25X1

Table A10.
SRBM Logistics—GOF/MD/Front Weapons Repair Bases

Installation/BE No	Geographic Coordinates
[redacted]	
LENINGRAD MD	
Leningrad Veh Stor A Maint Dpo [redacted]	59-59-11N 030-22-42E
BALTIC MD	
Kaliningrad Ord Rpr P Rothenstein DO 2 [redacted]	54-44-34N 020-32-57E
BELORUSSIAN MD	
Minsk Ord Dpo SE DO 1 [redacted]	53-51-46N 027-38-16E
CARPATHIAN MD	
Shepetovka Opd SAM Dpo DO 1 [redacted]	50-10-58N 027-04-59E
ODESSA MD	
Voznesensk Ord Dpo DO 1 [redacted]	47-35-42N 031-20-14E
NORTH CAUCASUS MD	
Novocherkassk Ord Dpo DO 1 [redacted]	47-24-38N 040-04-15E

Installation/BE No	Geographic Coordinates
TRANSCAUCASUS MD	
Tbilisi Munitions/Ord Stor [redacted]	41-42-33N 044-49-37E
KIEV MD	
Nezhin Ord and Ammo Dpo SW DO 1/DA 1 [redacted]	51-01-48N 031-52-05E
MOSCOW MD	
Pavloskaya Sloboda Ord Repair Fac [redacted]	55-49-00N 037-05-00E
TURKESTAN MD	
Tashkent Ord Dpo Urta Aul DO 1 [redacted]	41-11-42N 069-07-50E
TRANS-BAIKAL MD	
Staraya Kuka Dpo/Ord SW 1/DM SAM [redacted]	51-44-37N 113-01-21E
FAR EAST MD	
Khabarovsk Arty Engr Dpo [redacted]	48-21-42N 135-02-18E

25X1 25X1 25X1 25X1 25X1 25X1 25X1 25X1 25X1 25X1 25X1 25X1 25X1 25X1 25X1 25X1 25X1

This table is SECRET WNINTEL

 25X1 25X1

Sanitized Copy Approved for Release 2010/10/19 : CIA-RDP85T00840R000101130001-2

Sanitized Copy Approved for Release 2010/10/19 : CIA-RDP85T00840R000101130001-2

25X1
25X1

Queries may be directed to the following analysts in the Imagery Exploitation Group, NPIC, who have contributed to this report:

Name	Substantive Area	Telephone Black	Telephone Secure
	Deployed IRBMs and related activity		
	Missile test centers		
	Deployed ICBMs and related activity		
	Missile-related R&D facilities, production facilities, and MSRDs		
	C3 activity at deployed complexes		
	SRBMs		

25X1.1

(S)

Reverse side blank

25X1
25X1

Sanitized Copy Approved for Release 2010/10/19 : CIA-RDP85T00840R000101130001-2

Sanitized Copy Approved for Release 2010/10/19 : CIA-RDP85T00840R000101130001-2

[redacted]

Sanitized Copy Approved for Release 2010/10/19 : CIA-RDP85T00840R000101130001-2