"APPROVED FOR RELEASE: 06/05/2000 CIA-RDP86-00513R000100510020-2

Ageyev, I.N.

24(4) PHASE I BOOK EXPLOITATION SOV/3140

Akademiya nauk Ukrainskoy SSR. Institut fiziki

Fotoelektricheskiye i opticheskiye yavleniya v poluprovodnikakh; trudy pervogo vsesoyuznogo soveshchaniya po fotoelektricheskim i opticheskim yavleniyam v poluprovodnikakh, g. Kiyev, 20-26 noyabrya 1957 g (Photoelectric and Optical Phenomena in Semiconductors; Transactions of the First Conference on Photoelectric and Optical Phenomena in Semiconductors...) Kiyev, 1959. 403 p. 4,000 copies printed.

Additional Sponsoring Agency: Akademiya nauk SSSR. Prezidium. Komissiya po poluprovodnikam.

Ed. of Publishing House: I. V. Kisina; Tech. Ed.: A. A. Matveychuk; Resp. Ed.: V. Ye. Lashkarev, Academician, Ukrainian SSR, Academy of Sciences.

PURPOSE: This book is intended for scientists in the field of semiconductor physics, solid state spectroscopy, and semiconductor devices. The collection will be useful to advanced students in universities and institutes of higher technical training specializing in the physics and technical application of semiconductors.

COVERAGE: The collection contains reports and information bulletins (the latter are indicated by asterisks) read at the First All-Union Conference on Optical and Photoelectric Phenomena in Semiconductors. A wide scope of problems in semiconductor physics and technology are considered: photoconductivity, photoelectromotive forces, optical properties, photoelectric cells and photoresistors, the actions of hard and corpuscular radiations, the properties of thin films and complex semiconductor systems, etc. The materials were prepared for publication by Z. I. Rashboy, O. V. Snitko, K. B. Tolpygo, A. F. Lubchenko, and M. K. Sheynkman. References and discussion follow each article.

Gross, Ye. F., and M. A. Yakobson. Luminescence of CdS 61

Photoelectric and Optical Phenomena (Cont.) SOV/3140

Crystals at the Edge of the Main Adsorption [Spectrum] (Theses) 63

Gross, Ye. F., A. A. Kaplyanskiy, and B. V. Novikov. Structure of Spectral Photoconductivity Curves of Crystals at Low Temperatures (Theses) 66

Vishchakas, Yu. K. Some Optical and Photoelectric Properties of Polycrystalline CdSe Layers* 74

~~Pivtoradaly, N.~~ I., and G. A. Fedorus. Peculiarities of Photoconducting CdS_x $CdSe_{1-x}$-Single Crystals (x<1) 85

Khansevarov, R. Yu., S. M. Ryvkin, and I. N. Ageyev. Dependency of the Width of the "Forbidden" Zone on ~~Composition of~~ CdS-CdSe Solid Solutions* 95

Sal'kov, Ye. A., and G. A. Fedorus. The Generation of an Oscillating Photoelectric Current in CdS- and CdSe Single-Crystal Photoresistors 96

Card 5/16

APPROVED FOR RELEASE: 06/05/2000 CIA-RDP86-00513R000100510020-2"

"APPROVED FOR RELEASE: 06/05/2000 CIA-RDP86-00513R000100510020-2

DEM'YANOV, L.A., kand.tekhn.nauk; AKHTYAMOV, U.S.; AGEYEV, I.V.; PAKHOMOV, K.A. SARAFANOV, S.K.

Performance of IaAZ-204 engines fueled with light gasoline. Avt.prom. no.2:23-27 F '61. (MIRA 14:3)
(Automobiles—Engines)(Gasoline)

APPROVED FOR RELEASE: 06/05/2000 CIA-RDP86-00513R000100510020-2"

"APPROVED FOR RELEASE: 06/05/2000 CIA-RDP86-00513R000100510020-2

USSR / General Biology. General Histology. 3

Abs Jour : Ref Zhur - Biol, No 19, 1958, No 85562

Authors : Bazarnova, M. A.; Agayev, I. Ya.
Inst : Not given
Title : Neutrophilic Granulosity in Electron Microscopy Picture.

Orig Pub : Labor. delo, 1957, No. 3, 16-19

Abstract : A study by electron microscopy was conducted on blood of healthy humans and patients ill with cancer of the uterine cervix complicated by peritonitis. The neutrophile granulosity of the patients is polymorphous. Round, oval, rod-shaped, and granules of an indefinite form of a magnitude of 60 x 85 up to 450 x 540 mu are encountered. Large and medium size granules are

Card 1/2

APPROVED FOR RELEASE: 06/05/2000 CIA-RDP86-00513R000100510020-2

"APPROVED FOR RELEASE: 06/05/2000 CIA-RDP86-00513R000100510020-2

AGEYEV, I.Ya.

Electron microscope studies on Pasteurella pestis in the blood of infected pigs [with summary in English]. Vop.virus 3 no.4:221-225 Jl-Ag '58 (MIRA 11:9)

1. Ukrainskiy nauchno-issledovatel'skiy institut experimental'noy veterinarii, Khar'kov.

(PASTEURELLA PESTIC,
electron microscopy in infect hog blood (Rus))
(MICROSCOPY, ELECTRON,
of Pasteurella pestis in infected hog blood (Rus))

APPROVED FOR RELEASE: 06/05/2000 CIA-RDP86-00513R000100510020-2"

"APPROVED FOR RELEASE: 06/05/2000 CIA-RDP86-00513R000100510020-2

AGEYEV, I. Ya., Candidate Vet Sci (diss) -- "The immunobiology and electric microscopy of the swine-plague virus". Khar'kov, 1959. 25 pp (Min Agric USSR, Khar'kov Vet Inst), 200 copies (KL, No 24, 1959, 147)

APPROVED FOR RELEASE: 06/05/2000 CIA-RDP86-00513R000100510020-2"

"APPROVED FOR RELEASE: 06/05/2000 CIA-RDP86-00513R000100510020-2

8 (5)

AUTHOR: Ageyev, I. Z., Engineer (Moscow) SOV/105-59-11-11/32

TITLE: The Changes in the Characteristics of Electric Motors With High Velocity Range

PERIODICAL: Elektrichestvo, 1959, Nr 11, pp 52 - 56 (USSR)

ABSTRACT: In the introduction the influence exercised by the armature reaction of the current of commutating sections and of the voltage of the reversing poles on the terminal voltage is discussed and equation (1) for the terminal voltage is written. The last three terms in this formula may reduce or increase the voltage decrease. In the first part the influence exercised by the current in the commutating sections on the main field is dealt with. By figure 1 this influence is explained for accelerated and decelerated commutation, and equation (8) is deduced for the magnetizing force of the commutating sections. In figure 2 the dependence of the magnetizing force on the load for a maximum number of revolutions (9000 rpm) is represented. With low load commutation is accelerated, for loads with more than 100% it is decelerated and it is found that if the effect of the commutating sections agrees with the direction of the armature reaction a deformation of the characteristics and an unsteady

Card 1/3

APPROVED FOR RELEASE: 06/05/2000 CIA-RDP86-00513R000100510020-2"

"APPROVED FOR RELEASE: 06/05/2000 CIA-RDP86-00513R000100510020-2

performance of the motor is observed. This is explained in more detail by the diagrams in the figures 3,4, and 5 for an airplane generator. Furthermore it is said that with increasing load the transverse armature reaction (Poperechnaya reaktsiya yakorya) and the exciter current increase. In compensated generators the effect of the cross armature reaction is eliminated and the influence of the magnetizing factors is increased. In the final part the longitudinal armature reaction and the asymmetry of the field of the reversing poles is dealt with. In this connection a six-pole machine with a power of 6 kw is discussed. The investigations showed that a shift of the brushes and the influence of the commutating sections considerably change the control characteristics for a maximum number of revolutions i.e. in machines with equal and half the number of reversing pole of the field poles. In a symmetrical arrangement of the reversing poles to the neutral line no influence is found to be exercised on the main field since one half of the field of the reversing poles is summed with the

APPROVED FOR RELEASE: 06/05/2000 CIA-RDP86-00513R000100510020-2"

"APPROVED FOR RELEASE: 06/05/2000 CIA-RDP86-00513R000100510020-2

main field, the other is subtracted. If the reversing poles are shifted in the rotation direction and if the brushes are shifted in opposite direction an EMF is produced in the armature coils for the calculation of which a formula is given. Thus a "decrease" in the control characteristics is brought about. A stable performance of the machines with reversing poles cannot be achieved by shifting the brushes in the opposite direction to the armature, a shift in the rotation direction of the armature shows a positive effect with a slight increase in the minimum spin. To obtain a satisfactory commutation in the shift of the brushes the pole shoes of the reversing poles must be lengthened in the direction of the armature rotation direction. There are 8 figures.

SUBMITTED: February 14, 1959

APPROVED FOR RELEASE: 06/05/2000 CIA-RDP86-00513R000100510020-2"

"APPROVED FOR RELEASE: 06/05/2000 CIA-RDP86-00513R000100510020-2

AGEYEV, I.Z., inzh. (Moskva)

Distribution of magnetic flux and commutating field in machines having a full or half number of supplementary poles. Elektrichestvo no.3:38-43 Mr '60. (MIRA 13:6)
(Electric machinery)

APPROVED FOR RELEASE: 06/05/2000 CIA-RDP86-00513R000100510020-2"

"APPROVED FOR RELEASE: 06/05/2000 CIA-RDP86-00513R000100510020-2

86619

S/105/60/000/012/004/006
B012/B058

16.9500 (1031,1132,1222)

AUTHOR: Ageyev, I. Z., Engineer (Moscow)

TITLE: Conditions for Commutating Machines With a Wide Speed Range

PERIODICAL: Elektrichestvo, 1960, No. 12, pp. 61-69

TEXT: With a view to the fact that it is very difficult to obtain a good commutation in d.c. machines with a wide speed range ($n_{max}/n_{min} \geqslant 3$), the conditions for such a commutation are studied here. The commutation for machines with an without commutating poles is investigated. The zone of non-sparking commutation, the tuning of commutation according to the oscillograms of field and current in the coil, as well as the influence of brush heating and other factors on commutation are dealt with. The following statements are made on the basis of these explanations: For machines without commutating poles and with wide speed ranges it is suitable to mount the brushes in the neutral plane. For lowest and medium speed of machines with half the number of commutating poles, the zone of dark commutation is much wider than for machines with all commutating

Card 1/4

APPROVED FOR RELEASE: 06/05/2000 CIA-RDP86-00513R000100510020-2"

"APPROVED FOR RELEASE: 06/05/2000 CIA-RDP86-00513R000100510020-2

86619

Conditions for Commutating Machines With a Wide Speed Range

S/105/60/000/012/004/006
B012/B058

poles. At maximum speeds and the same electromagnetic loads, the zone of dark commutation is less wide for machines with half the number of commutating poles than for those with all commutating poles, and that owing to the change of the field form in the commutation zone without commutating poles. At equal weight and dimensions, the machine with all commutating poles always shows a greater electromagnetic load (by 15-20%) and a greater reactive emf e_r. The experiments show that for the manufacture of newly designed machines with a wide speed range, the main difficulties arise when tuning commutation for maximum speed, that is, when e_r and $e_r - e_k$, respectively, reach maximum values. e_k is the commutating emf. In this connection it is pointed out that the M. F. Karasev's statement (Ref. 4) that the function $e_r = f(n)$ is represented by straight lines parallel to the abscissa is wrong. The dark commutating zone can be absent in heavily utilized controllable machines at maximum speed and the commutating field B_k has an unfavorable form. For this reason, a displacement of the brushes from the neutral zones by a maximum of 1.0 mm should be permitted apart from the proper selection of the pole-shoe shape of the commutating pole (Ref. 2). The commutation in

Card 2/4

APPROVED FOR RELEASE: 06/05/2000 CIA-RDP86-00513R000100510020-2"

"APPROVED FOR RELEASE: 06/05/2000 CIA-RDP86-00513R000100510020-2

86619

Conditions for Commutating Machines With a Wide Speed Range

S/105/60/000/012/004/006
B012/B058

newly designed machines should be tuned by varying the main pole air gap and the commutating pole air gaps. Thus, not only the size but also the shape of the commutation field is changed. From the oscillogram it may be seen that the current change during commutation takes place only if commutation is slowed down. When commutation is accelerated, the current change proceeds along a continuous curve. It appears that in this case the commutation time is smaller than the calculated one. If commutation is slowed down, the commutation time equals the calculated value. Commutation, e_r, and the field form are largely dependent on the type and construction of the winding. It is recommended to use a winding with $u_k = 1$ and a shortened slot pitch for facilitating the commutation of heavily utilized machines with a wide speed range and a capacity of more than 18 kw. If possible, a combined frog-leg winding should be used. Experience has shown that machines with half the number of commutating poles show sufficient commutation if the linear load is $A \leqslant (350-400)$ a/cm and $e_r \leqslant 3.5$ v. There are 11 figures, 1 table, and 5 Soviet references.

Card 3/4

APPROVED FOR RELEASE: 06/05/2000 CIA-RDP86-00513R000100510020-2"

"APPROVED FOR RELEASE: 06/05/2000 CIA-RDP86-00513R000100510020-2

86619

Conditions for Commutating Machines With a Wide Speed Range

S/105/60/000/012/004/006
B012/B058

SUBMITTED: July 29, 1960

Card 4/4

APPROVED FOR RELEASE: 06/05/2000 CIA-RDP86-00513R000100510020-2"

"APPROVED FOR RELEASE: 06/05/2000 CIA-RDP86-00513R000100510020-2

AGEYEV, I.Z., inzh. (Moskva)

Effect of the nonsymmetry of the magnetizing force of the main poles on the commutating poles and on the operating characteristics of machines. Elektrichestvo no.9:37-40 S '61. (MIRA 14:9)
(Electric machinery)

APPROVED FOR RELEASE: 06/05/2000 CIA-RDP86-00513R000100510020-2"

"APPROVED FOR RELEASE: 06/05/2000 CIA-RDP86-00513R000100510020-2

AGEYEV, I.Z., inzh. (Moskva)

Features of the selection of armature windings of certain d.c. machinery. Elektrichestvo no.11:48-55 N '61. (MIRA 14:11)
(Electric machinery--Windings)

APPROVED FOR RELEASE: 06/05/2000 CIA-RDP86-00513R000100510020-2"

"APPROVED FOR RELEASE: 06/05/2000 CIA-RDP86-00513R000100510020-2

AGEYEV, I.Z. (Moskva)

Short-circuit current in electric generators with a wide range of speeds. Elektrichestvo no.1:45-48 Ja '62. (MIRA 14:12)
(Electric generators)

APPROVED FOR RELEASE: 06/05/2000 CIA-RDP86-00513R000100510020-2"

"APPROVED FOR RELEASE: 06/05/2000 CIA-RDP86-00513R000100510020-2

AGEYEV, I.Z. (Moskva)

Nonstable operation and self-oscillations in the automatic control systems of d.c. machines with distorted characteristics. Elektrichestvo no.5:56-60 My '64. (MIRA 17:6)

APPROVED FOR RELEASE: 06/05/2000 CIA-RDP86-00513R000100510020-2"

"APPROVED FOR RELEASE: 06/05/2000 CIA-RDP86-00513R000100510020-2

DIBNER, V.D.; AGEYEV, K.S.

Mesozoic deposits on the islands of Severnaya Zemlya. Inform.biul. NIIGA no.18:9-18 '60. (MIRA 14:6)
(Severnaya Zemlya--Geology, Stratigraphic)

APPROVED FOR RELEASE: 06/05/2000 CIA-RDP86-00513R000100510020-2"

"APPROVED FOR RELEASE: 06/05/2000 CIA-RDP86-00513R000100510020-2

AGEYEV, K.S.; DITMAR, A.V.

Some characteristics of the relief of high-mountainous regions in the Koryak Highland. Uch. zap. NIIGA. Reg. geol. no.4:137-150 '64. (MIRA 18:12)

APPROVED FOR RELEASE: 06/05/2000 CIA-RDP86-00513R000100510020-2"

"APPROVED FOR RELEASE: 06/05/2000 CIA-RDP86-00513R000100510020-2

AGEYEV, L. M., SUMANSKIY, A. V., and KHARIN, S. Ye.

"Colloids of Diffuded Sap," Zh. Sakharn. Prom., 5, 591, 1931.

APPROVED FOR RELEASE: 06/05/2000 CIA-RDP86-00513R000100510020-2"

"APPROVED FOR RELEASE: 06/05/2000 CIA-RDP86-00513R000100510020-2

FIGEYEV, L.M

28

1ST AND 2ND ORDERS

PROCESSES AND PROPERTIES INDEX

Peptization of pectin substances in diffusion. L. M. Aggeev. *Trudy Voronezh Khim.-Tekhnol. Inst.* 2, 32-42(1938). Peptization of pectin substances in sugar diffusion greatly increases above 80° for ripe beets and above 75° for unripe beets. Duration of heating up to 90 min. is without much effect. At 85° 1.30 times as much pectin substances were diffused into the juice as at 80°. Peptization is at a min at about pH 5.0; at pH 7.0, it is 2.35 times higher than at 3.0. Antipeptizing agents should be selected capable of decreasing the pH to an optimum and reducing the swelling ability of the pectin substances or coagulating them at the moment of peptization. Doubling the surface of the beet shaving left the extent of peptization unaffected. In a battery, the middle diffusers are responsible for most pectin substances passing into the juice; this is thought to be connected with the effect of temp. A colorimetric method (Silin and Silina, C. A. 28, 674[4]) was found to be applicable to research on the effect of pectin substances on diffusion.

J. G. Tolpin

ASM-SLA METALLURGICAL LITERATURE CLASSIFICATION

APPROVED FOR RELEASE: 06/05/2000 CIA-RDP86-00513R000100510020-2"

"APPROVED FOR RELEASE: 06/05/2000 CIA-RDP86-00513R000100510020-2

AGEYEV, L. M.

CR

28

PROCESSES AND PROPERTIES INDEX

Harmful colloids of the diffusion juice and their determination. L. M. Ageev. *Trudy Voronezh Khim.-Tekhnol. Inst.* 1, 115-26(1938).—Colloids pass into the juice during diffusion. To det. the content of harmful colloidal substances in the juice add a buffer mixture of AcOH + AcONa, bringing the pH to about 4.6, and heat on the water bath for 5 min. Saponin is pptd., together with coagulating proteins. Filter and ppt. pectins and peptones in the filtrate with 96% ethanol. Wash the ppt. to remove all sugar and dry to const. wt. The dry ppt. was found to contain 5.77-11.0% peptones, 21.95-35.20% ash and 28.59-35.0% pectins; nephelometric comparison of the suspension before pptn. with that of a standard rosin sol can also be used. The remainder consists of unknown colloids that cannot be removed by heating at pH 4.5-5.0. J. G. Tolpin

ASM-SLA METALLURGICAL LITERATURE CLASSIFICATION

APPROVED FOR RELEASE: 06/05/2000 CIA-RDP86-00513R000100510020-2"

"APPROVED FOR RELEASE: 06/05/2000 CIA-RDP86-00513R000100510020-2

AGEYEV, L.M.

Ca

28

The "instantaneous" and the cold defecation. L. M. Ageev. *Trudy Voronezh. Khim.-Tekh. Inst.* 3-4, 63-71 (1939); *Khim. Referat. Zhur.* 1940, No. 7, 119.—A. describes a technological scheme for refining sugar beets by an "instantaneous" defecation without a defecator. The method proposed is faster and less expensive than the ordinary method and produces higher-quality products. In combination with carbosulfitation the "instantaneous" defecation produces considerably less sol. Ca salts without an increase of color. Cold defecation decreases the intensity of the color, but does not decrease the content of Ca salts. Owing to the long time required for cold defecation and to the formation of much foam this method is not recommended. W. R. Henn

ASM-SLA METALLURGICAL LITERATURE CLASSIFICATION

APPROVED FOR RELEASE: 06/05/2000 CIA-RDP86-00513R000100510020-2"

"APPROVED FOR RELEASE: 06/05/2000 CIA-RDP86-00513R000100510020-2

I. N. Ageyev, Candidate of Technical Sciences, and S. A. Korol'kov, Candidate of Technical Sciences, Khimiko-tekhnicheskiy kontrol' i raschet gidrolizno-sulfitno-spirtovogo proizvodstva (Chemico-Technical Control and Calculation of Hydrolytic, and Sulfite Production of Alcohol). Goslesbumizdat.

The booklet gives investigation methods for raw materials, intermediate, and finished products, waste, auxiliary materials used, and includes plans for calculation of hydrolytic, and sulfite production of alcohol, and the production of yeasts, xylose, furfurol, bonding agents, and vanillin.

The booklet is intended for forestry institute students.

SO: Sovetskiye knigi (Soviet Books), No. 176, 1953, Moscow, (U-6472)

APPROVED FOR RELEASE: 06/05/2000 CIA-RDP86-00513R000100510020-2"

"APPROVED FOR RELEASE: 06/05/2000 CIA-RDP86-00513R000100510020-2

AGEYEV, L.M.; KOROL'KOV, S.I.; ZAKOSHCHIKOV, A.P., redaktor; VOLKHOVER, R.S., tekhnicheskiy redaktor.

[Chemical and technical control and accounting in hydrolyte and sulfite liquor production] Khimiko-tekhnicheskii kontrol' i uchet gidrolizmogo i sul'fitno-spirtovogo proizvodstva. Moskva, Goslesbumizdat, 1953. 403 p. (MLRA 7:8)
(Wood pulp industry)

APPROVED FOR RELEASE: 06/05/2000 CIA-RDP86-00513R000100510020-2"

"APPROVED FOR RELEASE: 06/05/2000 CIA-RDP86-00513R000100510020-2

AGEYEV, L.M., kand. tekhn. nauk, dotsent; BABIN, F.P., kand. tekhn. nauk, dotsent; SMIRNOV, V.A., doktor tekhn. nauk, prof.; SOFRONOV, G.F., kand. tekhn. nauk, dotsent, red.; IVANOV-RECHNOY, I.Ya., red.; NAUMOV, K.M., tekhn. red.

[Technology of the main branches of industry] Tekhnologiia vazhneishikh otraslei promyshlennosti; uchebnoe posobie dlia vysshikh partiinykh shkol. Pod red. G.V.Sofronova. Moskva, Izd-vo VPSh i AON pri TsK KPSS. Part 4. [Food industry] Pishchevaia promyshlennost'. 1961. 189 p. (MIRA 14:6)

(Food industry)

APPROVED FOR RELEASE: 06/05/2000 CIA-RDP86-00513R000100510020-2"

"APPROVED FOR RELEASE: 06/05/2000 CIA-RDP86-00513R000100510020-2

AGEYEV, Leonid Mikhaylovich, dots.; IVANOV, Sergey Zakharovich, prof.; SMIRNOV, Valentin Aleksandrovich, prof.; SILIN, P.M., prof., red.; MURASHOVA, O.I., red.; SOKOLOVA, I.A., tekhn. red.

[Technology of sugar substances; general course] Tekhnologiia sakharnykh veshchestv; obshchii kurs. Pod red. P.M.Silina. Moskva, Pishchepromizdat, 1961. 488 p. (MIRA 15:3)
(Sugar) (Starch)

APPROVED FOR RELEASE: 06/05/2000 CIA-RDP86-00513R000100510020-2"

"APPROVED FOR RELEASE: 06/05/2000 CIA-RDP86-00513R000100510020-2

VYDRIN, V.N.; AMOSOV, P.N.; AGEYEV, L.M.

Dynamometer with a nonamplifying circuit and resistance strain gauges. Izm. tekh. no.8:24-25 Ag '63. (MIRA 16:10)

APPROVED FOR RELEASE: 06/05/2000 CIA-RDP86-00513R000100510020-2"

"APPROVED FOR RELEASE: 06/05/2000 CIA-RDP86-00513R000100510020-2

VYIRIN, V.N.; AGEYEV, L.M.

Effect of expansion in width on the form of the epure of contact stresses. Izv. vys. ucheb. zav.; chern. met. 8 no.11:69-73 '65. (MIRA 18:11)

1. Chelyabinskiy politekhnicheskiy institut.

APPROVED FOR RELEASE: 06/05/2000 CIA-RDP86-00513R000100510020-2"

"APPROVED FOR RELEASE: 06/05/2000 CIA-RDP86-00513R000100510020-2

LIKHACHEV, N.V.; NAZAROV, V.P.; AGEYEV, L.S.; BORISOVICH, Yu.F.; LYUBASHENKO, S.Ya.; KORNEYEV, I.P.; MALAKHOV, Yu.A.; YURKOV, G.G.

Book reviews and bibliography. Veterinariia 40 no.8:86-89 Ag '63. (MIRA 17:10)

APPROVED FOR RELEASE: 06/05/2000 CIA-RDP86-00513R000100510020-2"

"APPROVED FOR RELEASE: 06/05/2000 CIA-RDP86-00513R000100510020-2

AGIRBICEANU, L; HAGIESCU, M.

Temperature of rotation in the CH(λ 3889A) band emitted by the Bunsen flame. p. 1263. Academia Republicii Populare Romine. COMUNICARILE. Bucuresti. Vol. 5, no. 6, June 1955.

SOURCE: East European Accessions List (EEAL) Library of Congress, Vol. 5, no. 9, Sept. 1955

APPROVED FOR RELEASE: 06/05/2000 CIA-RDP86-00513R000100510020-2"

"APPROVED FOR RELEASE: 06/05/2000 CIA-RDP86-00513R000100510020-2

AGIRBICEANU, L., AND OTHERS

Effect of argon on the spectrum of vapors of I_2. p. 1439.
Academia Republicii Populare Romine. COMUNICARILE. Bucuresti.
Vol. 5, no. 10, Oct. 1955.

SOURCE: East European Accessions List (EEAL) Library of Congress, Vol. 5, no. 9, Sept. 1955

APPROVED FOR RELEASE: 06/05/2000 CIA-RDP86-00513R000100510020-2"

"APPROVED FOR RELEASE: 06/05/2000 CIA-RDP86-00513R000100510020-2

AGEYEV, M. (Rostov-na-Donu); KANUKOV, G. (Rostov-na-Donu)

Center of grain in 35 minutes. Sov. profsoiuzy 18 no.6:8 Mr '62. (MIRA 15:3)

1. Sekretar' Rostovskogo oblastnogo komiteta profsoyuza rabochikh i sluzhashchikh sel'skogo khozyaystva i zagotovok (for Ageyev).
2. Instruktor Rostovskogo oblastnogo soveta profsoyuzov, neshtatnyy korrespondent zhurnala "Sovetskiye profsoyuzy" (for Kanukov).

(Rostov Province--Grain)

APPROVED FOR RELEASE: 06/05/2000 CIA-RDP86-00513R000100510020-2"

"APPROVED FOR RELEASE: 06/05/2000 CIA-RDP86-00513R000100510020-2

AGEYEV, M.D., (Leningrad)

Approximate theory of magnetic-modulated data transmitters.
Avtom. i telem. 17 no.8:746-758 Ag '56. (MLRA 9:10)

(Magnetic instruments)

APPROVED FOR RELEASE: 06/05/2000 CIA-RDP86-00513R000100510020-2"

"APPROVED FOR RELEASE: 06/05/2000 CIA-RDP86-00513R000100510020-2

S/196/63/000/002/019/026
E194/E155

AUTHOR: Ageyev, M.D.

TITLE: Modeling of heat-transfer equipment

PERIODICAL: Referativnyy zhurnal, Elektrotekhnika i energetika, no.2, 1963, 7, abstract 2 G 33. (Dokl. 4-y Mezhvuz. konferentsii po primeneniyu fiz. i matem. modelirovaniya v razlichn. otraslyakh tekhn. Sb.3. (Reports of the 4th Intercollegiate Conference on the Application of Physical and Mathematical modeling in various branches of technology. Collection 3). Moscow, 1962, 243-251)

TEXT: A method of modeling heat-exchange processes for two of the most simple cases is proposed; the temperature of the secondary heat-transfer medium is the same throughout the length of the coil carrying the primary medium; and the temperature of the secondary medium varies in a given direction according to a linear law. Special methods of modeling are required, because standard electronic models will not directly solve differential equations in the partial differential coefficients which describe the processes of heat and mass exchange. Models intended for

Card 1/2

APPROVED FOR RELEASE: 06/05/2000 CIA-RDP86-00513R000100510020-2"

"APPROVED FOR RELEASE: 06/05/2000 CIA-RDP86-00513R000100510020-2

Modeling of heat-transfer equipment S/196/63/000/002/019/026
E194/E155

solving boundary problems cannot be used either. With the above-mentioned assumptions, the methods proposed describe the dynamics of the secondary medium by ordinary differential equations. These assumptions are valid in the solution of numerous problems, for instance, in cases of transverse flow of secondary medium over a coil and that of relatively slow flow of secondary medium in a longitudinal direction. In the methods considered the modeling diagrams differ from those used in systems with concentrated parameters in the presence of an element which introduces delay. The delay process may be modeled by various devices, such as a standard delay unit type БП-3 (BP-3). It is better to use a device which models the relationship:

$$\lim_{n \to \infty} \left(\frac{1}{1 + \frac{T}{n} p} \right)^n = \ell^{-Tp}$$

[Abstractor's note: Complete translation.]

Card 2/2

APPROVED FOR RELEASE: 06/05/2000 CIA-RDP86-00513R000100510020-2"

"APPROVED FOR RELEASE: 06/05/2000 CIA-RDP86-00513R000100510020-2

AGEYEV, M.D. (Vladivostok)

"Optimum structure of an amortization system for random forces"

report presented at the 2nd All-Union Congress on Theoretical and Applied Mechanics, Moscow, 29 January - 5 February 1964

APPROVED FOR RELEASE: 06/05/2000 CIA-RDP86-00513R000100510020-2"

"APPROVED FOR RELEASE: 06/05/2000 CIA-RDP86-00513R000100510020-2

AGEYEV, M.I.; PODDERYUGIN, V.D., otv. red.; ORLOVA, I.A., red.

[Principles of the "Algol-60" algorithmic language.] Osnovy algoritmicheskogo iazyka Algol-60. Moskva, 1964. 114 p. (Akademiia nauk SSSR. Vychislitel'nyi tsentr. Obshchie voprosy programmirovaniia, no.1). (MIRA 17:10)

APPROVED FOR RELEASE: 06/05/2000 CIA-RDP86-00513R000100510020-2"

"APPROVED FOR RELEASE: 06/05/2000 CIA-RDP86-00513R000100510020-2

AGEYEV, Mikhail Vasil'yevich; GOLUBNICHIY, I.S., prof., doktor ekon.nauk, red.; PASKIN, I., red.izd-va; MAKEYCHEVA, Ye., red.izd-va; POPOVA, M., tekhn.red.

[Victory of collective farming in Mordovia] Pobeda kolkhoznogo stroia v Mordovskoi ASSR. Pod red. I.S.Golubnichego. Saransk, Mordovskoe knizhnoe izd-vo, 1960. 413 p. (MIRA 14:2)

(Mordovia--Collective farms)

APPROVED FOR RELEASE: 06/05/2000 CIA-RDP86-00513R000100510020-2"

"APPROVED FOR RELEASE: 06/05/2000 CIA-RDP86-00513R000100510020-2

DANILOV, Grigoriy Grigor'yevich, kand. sel'khoz. nauk; AGEYEV, M.V., doktor ekon. nauk, prof., otv. red.; YEGOROV, V., red.

[From the history of agriculture in Mordovia] Iz istorii zemledeliia Mordovii. Saransk, Mordovskoe knizhnoe izd-vo, 1964. 110 p. (MIRA 17:8)

APPROVED FOR RELEASE: 06/05/2000 CIA-RDP86-00513R000100510020-2"

"APPROVED FOR RELEASE: 06/05/2000 CIA-RDP86-00513R000100510020-2

SNESAREV, K.A.; VOROB'YEVA, M.T.; AGEYEV, M.Ye.

Rapid method for determining the temperature of colophony softening. Gidroliz. i lesokhim. prom. 9 no.4:17-18 '56. (MLRA 9:11)

1. TSentral'nyy nauchno-issledovatel'skiy lesokhimicheskiy institut.

(Gums and resins)

APPROVED FOR RELEASE: 06/05/2000 CIA-RDP86-00513R000100510020-2"

"APPROVED FOR RELEASE: 06/05/2000 CIA-RDP86-00513R000100510020-2

AGEYEV, M.Ye.

Magnetic level indicator. Gidroliz. i lesokhim. prom. 10 no.3: 21-22 '57. (MLRA 10:5)

1. TSentral'nyy nauchno-issledovatel'skiy lesokhimicheskiy institut.

(Liquid level indicators)

APPROVED FOR RELEASE: 06/05/2000 CIA-RDP86-00513R000100510020-2"

"APPROVED FOR RELEASE: 06/05/2000 CIA-RDP86-00513R000100510020-2

AGEYEV, N.

At a complex production. Prof.-tekh. obr. 18 no.9:9-10 S '61. (MIRA 14:11)

1. Direktor tekhnicheskogo uchilishcha No.5, Novosibirsk.
(Novosibirsk--Vocational education)

APPROVED FOR RELEASE: 06/05/2000 CIA-RDP86-00513R000100510020-2"

"APPROVED FOR RELEASE: 06/05/2000 CIA-RDP86-00513R000100510020-2

1. KOGAN, A. Ya.; GAVRIKOV, V. A.; KHMELEV, A. P.; AGEYEV, N. A.; KULEMENA, Ye. A.

2. USSR (600)

4. Horses

7. Results of raising colts on the collective farms of the Pochinok State Breeding Farm. Konevodstvo 22 no. 12 1952.

9. Monthly List of Russian Accessions, Library of Congress, ~~April~~ 1953, Uncl.

APPROVED FOR RELEASE: 06/05/2000 CIA-RDP86-00513R000100510020-2"

"APPROVED FOR RELEASE: 06/05/2000 CIA-RDP86-00513R000100510020-2

85663

S/182/60/000/007/005/016
A162/A029

1.9600

AUTHOR: Ageyev, N.P.

TITLE: Investigations of the Temperature-Speed Factor in Plastic Deformation of Metals

PERIODICAL: Kuznechno-shtampovochnoye proizvodstvo, 1960, No. 17, pp. 17 - 21

TEXT: There is no proved theory explaining the effect of the deformation speed on the mechanical properties of deformed metal and there are as yet no special test machines for experiments with hot metal and very fast deformation. This article presents a review of different test machines with brief design and operation descriptions: the rotary machine of A. Nadai and M. Menzhoyn, with mechanical drive for tests of metal properties at 135 to 900 sec^{-1} and high temperature and a machine of a similar principle (Fig. 1) with heavy flywheel, mounted on a rolling mill stand described in (Ref. 6) in which deformation is recorded by photoelectric or electric means. A rotary machine with force transmission to the specimen through a flexible tie rod (Fig. 2) (Ref. 7); a machine with loading by means of chain transmission (Fig. 3); a machine for tension and compression (Fig. 4), (Ref. 8) under loads up to 1,000 kg at temperatures between

Card 1/6

APPROVED FOR RELEASE: 06/05/2000 CIA-RDP86-00513R000100510020-2"

"APPROVED FOR RELEASE: 06/05/2000 CIA-RDP86-00513R000100510020-2

85663

S/182/60/000/007/005/016
A162/A029

Investigations of the Temperature-Speed Factor in Plastic Deformation of Metals

-195 to +800°C and 0.03 - 52 mm/sec deformation; a machine with a multithread screw (Fig. 5), including a variator of IsNIITMASh design, a V-belt transmission, electric 1.5 kw motor, and heavy sheaves. A hydraulic test machine for 500 kg maximum load designed at the LVMI with deformation speed controllable within a range of 1 to 100 mm/sec. The electric feed circuit and high frequency amplifier and the bridge for measuring deformation in this latter machine are illustrated by circuit diagrams. This machine has been in use for 6 months and has been found satisfactory. There are [redacted] 9 references: 7 Soviet, 1 German, 1 British.

Card 2/6

APPROVED FOR RELEASE: 06/05/2000 CIA-RDP86-00513R000100510020-2"

"APPROVED FOR RELEASE: 06/05/2000 CIA-RDP86-00513R000100510020-2

25663

S/182/60/000/007/005/016
A162/A029

Investigations of the Temperature-Speed Factor in Plastic Deformation of Metals

Figure 1:

High-Speed Installation Mounted on the Base of a Rolling Mill Stand 1-support; 2-flywheel bearing; 3-supporting columns; 4-cross-head; 5-anvil rigidly fastened with the sample; 6-core of electromagnet.

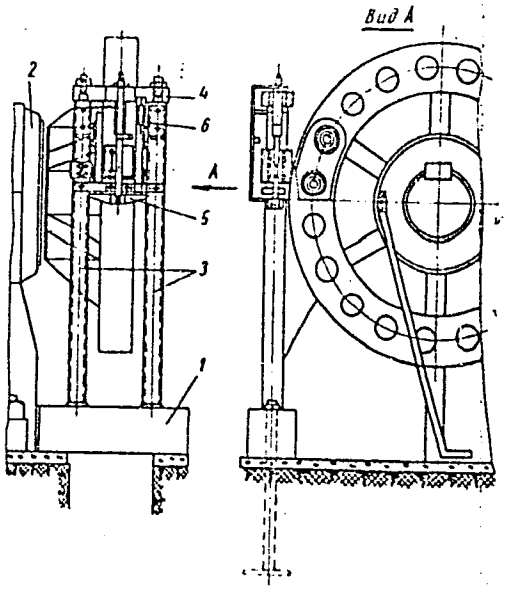

Card 3/6

APPROVED FOR RELEASE: 06/05/2000 CIA-RDP86-00513R000100510020-2"

"APPROVED FOR RELEASE: 06/05/2000 CIA-RDP86-00513R000100510020-2

85663

S/182/60/000/007/005/016
A162/A029

Investigations of the Temperature-Speed Factor in Plastic Deformation of Metals

Figure 2:

Diagram of an Experimental Drop Hammer for Investigating Metals in the Hot State:
1-flywheel; 2-pin; 3-flexible tie rod; 4-wedge-shaped support for removing the tie rod clamps 5-upper clutch; 6-elastic dynamometer; 7-furnace; 8-lower clutch.

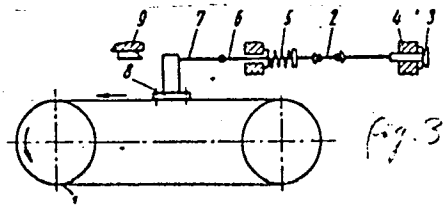

Fig. 3

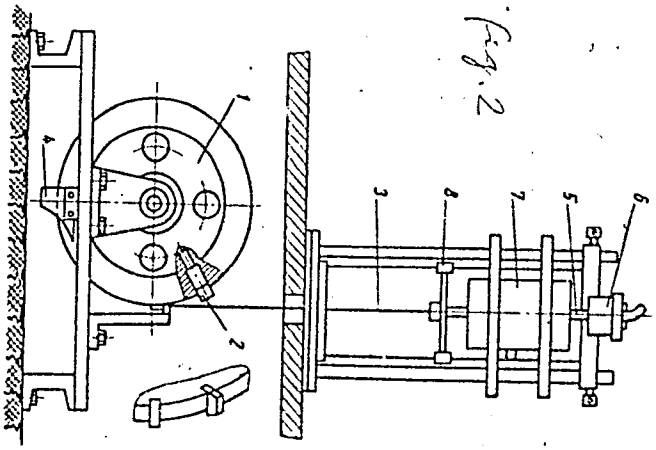

Fig. 2

Figure 3: Diagram of the Loading Mechanism of an Experimental Machine With Chain Transmission: 1-loading chain; 2-sample; 3-elastic element; 4-support; 5-spring; 6-hinge; 7-tie rod; 8-carriage; 9-wedge.

Card 4/6

APPROVED FOR RELEASE: 06/05/2000 CIA-RDP86-00513R000100510020-2"

"APPROVED FOR RELEASE: 06/05/2000 CIA-RDP86-00513R000100510020-2

85663

S/182/60/000/007/005/016
A162/A029

Investigations of the Temperature-Speed Factor in Plastic Deformation of Metals

Figure 4:

Kinematic Diagram of a Machine for Tension and Compression Tests at Various Rates and Temperatures: 1-electromotors; 2-connecting piece; 3 and 4-worm gears; 5- master form; 6-elastic element; 7-clutches; 8-casing; 9-12-photoelectric installation for measuring and recording forces and deformations

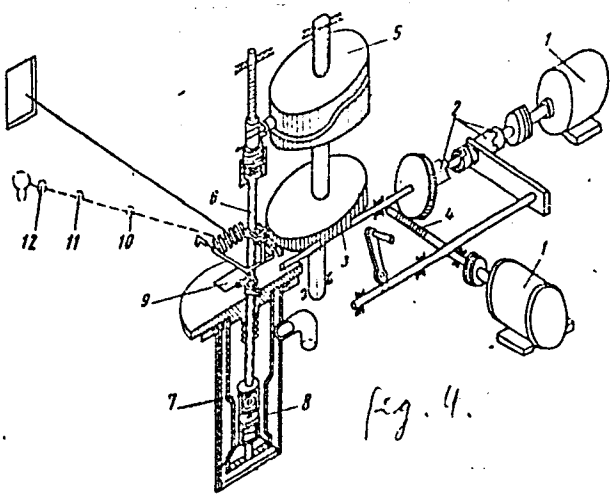

fig. 4.

Card 5/6

APPROVED FOR RELEASE: 06/05/2000 CIA-RDP86-00513R000100510020-2"

"APPROVED FOR RELEASE: 06/05/2000 CIA-RDP86-00513R000100510020-2

85663

S/182/60/000/007/005/016
A162/A029

Investigation of the Temperature-Speed Factor in Plastic Deformation of Metals

Figure 5:

Kinematic Diagram of the Loading Mechanism of a Machine for Tension Tests at Various Deformation Rates.

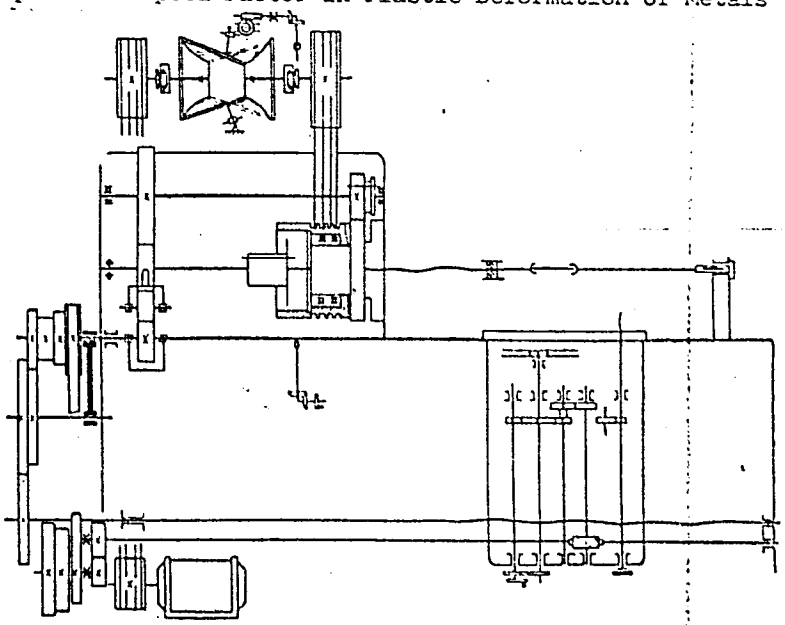

Card 6/6

APPROVED FOR RELEASE: 06/05/2000 CIA-RDP86-00513R000100510020-2"

"APPROVED FOR RELEASE: 06/05/2000 CIA-RDP86-00513R000100510020-2

S/902/62/000/000/003/015
E193/E383

AUTHOR: Ageyev, N.P.

TITLE: The effect of temperature and strain-rate on the workability of steels

SOURCE: Novyye protsessy obrabotki metallov davleniyem; doklady Soveshch. po novym prots. obrab. met. davleniyem v mashinostr., 1960. Ed. by V. D. Golovlev. Moscow, Izd-vo AN SSSR, 1962. 53 - 60

TEXT: The present investigation, directed by Professor, Doctor of Technical Sciences G.A. Smirnov-Alyayev, was conducted at the metal-working department of the Leningradskiy mekhanicheskiy institut (Leningrad Mechanical Institute). It object was to determine the effect of temperature and strain-rate (in the 10^{-3} - 10^{1} sec^{-1} range) on the mechanical properties of steels and other alloys with a view to providing accurate and comprehensive data necessary for studies of various metal-working processes. The tests were carried out on a specially designed tensile-testing

Card 1/3

APPROVED FOR RELEASE: 06/05/2000 CIA-RDP86-00513R000100510020-2"

"APPROVED FOR RELEASE: 06/05/2000 CIA-RDP86-00513R000100510020-2

machine equipped with a tensometer and an oscillograph for recording both the loads and strains. The experimental materials included brass Л62 (L62) and steels 1Х13 (1Kh13), 1Х18Н9Т (1Kh18N9T), 45, У-7 (U-7). The tensile tests were conducted at 800 - 1200 °C. Analysis of the results obtained led to the following conclusions: 1) The relationship between the true tensile strength σ and the strain-rate v is described by $\sigma = \sigma_o + K \ln v$ for the 1Kh18N9T steel and by:

$$\sigma / \sigma_o = \left(v/v_o\right)^N \qquad (1)$$

for the other materials studied. 2) In the case of alloys with a relatively low melting point, the maximum effect of the strain rate on σ is shifted towards temperatures approaching the melting point. 3) The strain-rate dependence of the critical values of stable deformation M_ε can be described by $M_\varepsilon = 1/(a - b \log v)$. 4) On increasing the strain-rate to 10^{-1} sec^{-1} the reduction in area of steel 1Kh13 increases, decreasing at strain rates greater than 10^{-1} sec^{-1} (the reduction in area of steels 45 and U-7 in

APPROVED FOR RELEASE: 06/05/2000 CIA-RDP86-00513R000100510020-2"

"APPROVED FOR RELEASE: 06/05/2000 CIA-RDP86-00513R000100510020-2

the entire range of temperatures and strain rates studied was 97 - 100%). 5) A clearly defined relationship between the strain rate and plasticity was observed only for steel 1Kh13 at 1100 - 1200 °C; on increasing v from the lowest to the upper limit of the range studied, the plasticity of this steel increased by 70 - 80%. 6) Steels 1Kh13, 45 and U-7 should be hot-worked at 1100 - 900 °C at strain rates of 1 - 15 sec^{-1} to ensure the highest plasticity. There are 2 figures and 7 tables.

APPROVED FOR RELEASE: 06/05/2000 CIA-RDP86-00513R000100510020-2"

"APPROVED FOR RELEASE: 06/05/2000 CIA-RDP86-00513R000100510020-2

AGEYEV, Nikolay Pavlovich, inzh.; CHERNYAKOVA, I.Z., inzh., red.; FREGER, D.P., red. izd-va; BELOGUROVA, I.A., tekhn. red.

[Mechanical properties of steel at high temperatures and various rates of deformation] Mekhanicheskie svoistva stali pri vysokikh temperaturakh i razlichnykh skorostiakh deformatsii. Leningrad, 1961. 26 p. (Leningradskii dom nauchno-tekhnicheskoi propagandy. Seriia: Goriachaia i kholodnaia obrabotka metallov davleniem, no.10) (MIRA 15:5)
(Steel--Testing) (Metals at high temperatures)

APPROVED FOR RELEASE: 06/05/2000 CIA-RDP86-00513R000100510020-2"

"APPROVED FOR RELEASE: 06/05/2000 CIA-RDP86-00513R000100510020-2

18 8200 1454 1413 27149 S/182/61/000/009/001/005
D038/D112

AUTHOR: Ageyev, N.P.

TITLE: Effect of an increased temperature and high-speed rate in working by pressure on the resistance to deformation in steels

PERIODICAL: Kuznechno-shtampovochnoye proizvodstvo, no. 9, 1961, 1-4

TEXT: The article describes the results of an investigation on the effect of temperature and speed of deformation on the resistance to deformation in steels in hydraulic and power presses. The test was carried out at the kafedra "Obrabotka metallov davleniyem", Leningradskiy mekhanicheskiy institut (the Department of "Working of Metals by Pressure", Leningrad Mechanical Engineering Institute) on a tensile testing machine developed and designed by the department. Prior to testing, 6 mm diam, 60 mm long specimens were heated to a preset temperature for 20-30 min and then kept for 5-15 min in an electric tubular furnace. The following deformation speeds were used: $(3-6) \cdot 10^{-3}$; $(5.0-8.0) \cdot 10^{-2}$; $(2.0-4.0) \cdot 10^{-1}$; 1.0-3.0 sec^{-1} at 800-1200°C, and 3 to 5 specimens were tested at every speed. The

Card 1/3

APPROVED FOR RELEASE: 06/05/2000 CIA-RDP86-00513R000100510020-2"

"APPROVED FOR RELEASE: 06/05/2000 CIA-RDP86-00513R000100510020-2

test results of the 45, У 7 (U7), and 1X 13 (1Kh13) steels were analyzed. It is stated that F.F. Vitman and N.A. Zlatin (Ref.4: Vitman, F.F., Zlatin, N.A., Ioffe, B.S., Soprotivleniye deformirovaniyu metallov pri skorostyakh 10^{-6}-10^{2} m/sec^{4} [The resistance to deformation in metals at speeds of 10^{-6}-10^{2} m/sec^{4}], ZhTF, t. XIX, vyp. 3, 1949) had determined the dependence of hardness on speed deformation in Al, Zn, Pb, and mild steel within a high-temperature range; this was confirmed for a range of non-ferrous metals and steels by L.D. Sokolov (Ref. 3: "Sistematicheskoye issledovaniye skorostnoy i temperaturnoy zavisimosti soprotivleniya deformirovaniyu u odnofaznykh metallov" [A systematic investigation into the speed and temperature dependence of resistance to deformation in single-phase metals], Doklady AN SSSR, t. LXX, no. 5, 1950), and for steels by M.A. Zaykov (Ref. 5: Shamets, Ya.V., Zaykov, M.A., Soprotivleniye deformatsii uglerodistykh staley pri vysokoskorostnoy goryachey prokatke [Resistance to deformation in carbon steels at high-speed rolling], "Izvestiya vysshikh uchebnykh zavedeniy chernaya metallurgiya", no. 5, 1959). The correctness of a double logarithmic dependence between the deformation speed and deformation resistance for 08 кп (08kp), 40, М 62 (M62), and У 8 А (U8A) carbon steels

APPROVED FOR RELEASE: 06/05/2000 CIA-RDP86-00513R000100510020-2"

"APPROVED FOR RELEASE: 06/05/2000 CIA-RDP86-00513R000100510020-2

AGEYEV, N.P.; KARATUSHIN, S.I.

Methods for short-time tests of metals of elevated deformation rates. Zav. lab. 30 no.5:593-595 '64. (MIRA 17:5)

1. Leningradskiy mekhanicheskiy institut.

APPROVED FOR RELEASE: 06/05/2000 CIA-RDP86-00513R000100510020-2"

"APPROVED FOR RELEASE: 06/05/2000 CIA-RDP86-00513R000100510020-2

ACCESSION NR: AR4036259 S/0137/64/000/003/I036/I036

SOURCE: Referativnyy zhurnal. Metallurgiya, Abs. 3I219

AUTHOR: Ageyev, N. P.

TITLE: Influence of temperature and strain rate on the hardening properties of steels during plastic deformation

CITED SOURCE: Sb. tr. Leningr. mekhan. in-ta, no. 34, 1963, 78-90

TOPIC TAGS: Plastic deformation, strain rate, steel hardening rate, steel deformation resistance

TRANSLATION: The effect of temperature and strain rate (SR) on the hardening rate within the range of the uniform stage of strain was investigated. The hardening rate π was described by the tangent of the slope formed by the positive direction of the tangent to any point of the hardening curve and by the positive direction of the strain axis. The dependence of π on SR may be expressed as $\pi = kv^{N-M}$, where $k = aN/BM$ (v is the SR, N and M are rate exponents which are constant for a given

Card 1/2

APPROVED FOR RELEASE: 06/05/2000 CIA-RDP86-00513R000100510020-2"

"APPROVED FOR RELEASE: 06/05/2000 CIA-RDP86-00513R000100510020-2

ACCESSION NR: AR4036259

temperature and range of rates, and a and B are constants). The temperature dependence of π has the form of an exponential function. In practice, knowing the relationship governing the change of the exponent (N-M) with the temperature, one can refine the shape of the hardening curves at any testing temperature by using the dependence of π on the rate and temperature of the strain. Analysis of the dependence of π on SR made it possible to construct diagrams of change of the hardening curves as a function of the testing temperature with the following characteristic regions: I, region of the most pronounced influence of SR on the deformation resistance, plasticity and on the hardening curves as a whole; II, region of less pronounced influence of SR on the deformation resistance and of a slight influence of SR on π and plasticity; III, region characterized by an insignificant influence of SR on the deformation resistance and by an opposite influence on the plastic properties, owing to an appreciable effect of strain localization; IV, region which covers very high SR and is essentially characterized by the appearance of brittle fracture of the metal when the critical SR is traversed. The proposed dependence of the π criterion on the temperature and SR was experimentally confirmed by several metals (Ni-Si-Mn steel, and the steels 25, U-7, IKh13, EI612). V. Terent'yev.

DATE ACQ: 17Apr64 SUB CODE: ML ENCL: 00

Card 2/2

APPROVED FOR RELEASE: 06/05/2000 CIA-RDP86-00513R000100510020-2"

"APPROVED FOR RELEASE: 06/05/2000 CIA-RDP86-00513R000100510020-2

AGEYEV, Nikolay Pavlovich, kand. tekhn.nauk; MEDVEDEV, V.A., red.

[Resistance to deformation of alloyed steels during hot pressure working] Soprotivlenie deformirovaniiu legirovannykh stalei pri goriachei obrabotke davleniem. Leningrad, 1965. 36 p. (MIRA 18:10)

APPROVED FOR RELEASE: 06/05/2000 CIA-RDP86-00513R000100510020-2"

"APPROVED FOR RELEASE: 06/05/2000 CIA-RDP86-00513R000100510020-2

L 24798-66 EWT(m)/T/EWP(t) IJP(c) JD/JG

ACC NR: AP6011661 SOURCE CODE: UR/0020/66/167/003/0635/0636

AUTHOR: Ageyev, N. V. (Corresponding member); Ignatov, D. V.; Kantor, M. M. 44 B

ORG: Institute of Metallurgy im. A. A. Baykov (Institut metallurgii)

TITLE: Electron microscopic and microdiffraction analysis of nonmetallic inclusions in molybdenum and its alloys 18 27 18

SOURCE: AN SSSR. Doklady, v. 167, no. 3, 1966, 635-636, and insert facing p. 636

TOPIC TAGS: molybdenum, molybdenum alloy, alloy inclusion, nonmetallic inclusion, electron beam melted alloy

ABSTRACT: The electron microscope is used for studying nonmetallic inclusions in molybdenum and its alloys melted by various methods. The phase composition and distribution of the inclusions were determined in specimens of molybdenum produced by electron-beam melting and in molybdenum alloys containing carbon (0.003-0.021%), titanium (0.02-0.3%) and zirconium (0.01-0.15%), produced by arc melting, and also by fusion melting. The specimens were studied in the cast, deformed and annealed states. The method used for producing the replicas is briefly described. Photomicrographs and diffraction patterns show that the inclusions consist basically 18

Card 1/2 UDC: 537.533.35:548.4:669.28

APPROVED FOR RELEASE: 06/05/2000 CIA-RDP86-00513R000100510020-2"

"APPROVED FOR RELEASE: 06/05/2000 CIA-RDP86-00513R000100510020-2

L 24798-66

ACC NR: AP6011661

of Mo_2C molybdenum carbide. This is probably due to the melting conditions and heat treatment of the specimens. The electron-beam melting and annealing were done in a vacuum of 10^{-4}-10^{-5} Hg mm. Oil vapor diffusion pumps were used for producing the vacuum. Apparently the main residual gas consists of the oil vapors which decomposes to form carbon. This carbon diffuses into the metal and forms carbides. The residual gas in this case does not oxidize molybdenum and tungsten as is the case for several other metals (e.g. Al, Ti, Zr, Fe etc.). Molybdenum and tungsten oxides are apparently unstable under these conditions while their carbides are highly stable. Orig. art. has: 3 figures, 1 table. [14]

SUB CODE: 11/ SUBM DATE: 28Aug65/ ORIG REF: 004/ OTH REF: 004/ ATD PRESS: 4250

Card 2/2

APPROVED FOR RELEASE: 06/05/2000 CIA-RDP86-00513R000100510020-2"

"APPROVED FOR RELEASE: 06/05/2000 CIA-RDP86-00513R000100510020-2

PROCESSES AND PROPERTIES INDEX

Ca

9

The diffusion of admixtures into steel, and the cellular theory of the structure of metals (according to the work of Professor M. K. Ziegler). N. AGEEV AND M. ZAMOTORIN. *Ann. Inst. Polytech. Leningrad* (*Sect. Math. Phys. Sci.*) 31, 15-28 (1928) (English summary); *J. Inst. Metals* 44, 556.—A systematic investigation was made of the diffusion of various admixts., both in the solid and liquid states, into mild steel (C = 0.08-0.15%) at temps. of 750°, 1000° and 1200°, the duration of each expt. being 3 hrs. In the solid state the degree of penetration of the various admixts. can be arranged on the following decreasing series: at 1000°, C, Pt, ferro-Mo, B, ferro-W, WC, Ni, Au, Mn, ferro-B, Co, ferro-Ti, ferro-chrome, Cr, V, ferro-Si, ferro-Mn, ferro-V, Si, W, Ti. At 1200°, ferro-Si, Mo, Rh, ferro-Mn, Pd, Ru. In the liquid state at 1000°, diffusion was observed with Al, Ce, Sn, no results being obtained with Ag, Bi, Te, Pb, Ca. At 1200° no results were obtained with Ba and Li. At 750° diffusion of Zn could be observed, but not that of Cd. The cellular theory of metal structure developed by the late M. K. Ziegler was examd. in the light of the above results.

G. G.

ASM-SLA METALLURGICAL LITERATURE CLASSIFICATION

APPROVED FOR RELEASE: 06/05/2000 CIA-RDP86-00513R000100510020-2"

"APPROVED FOR RELEASE: 06/05/2000 CIA-RDP86-00513R000100510020-2

1ST AND 2ND ORDERS

PROCESSES AND PROPERTIES INDEX

Preservation of steel objects from oxidation at high temperatures. O. I. VER AND N. V. AGEEV. *Zhur. Prikladnoi Khimii* 2, 451-6(1929). Coating of steel with Al is best done in an atm. of a neutral gas, such as purified atm. N_2, by heating the objects for 25 hrs. at 900-1000° in a mixt. of 49% FeAl + 49% Al_2O_3 + 2% NH_4Cl. Treated objects might be used at temps. up to 900°. V. KALICHEVSKY

9

ASM-SLA METALLURGICAL LITERATURE CLASSIFICATION

APPROVED FOR RELEASE: 06/05/2000 CIA-RDP86-00513R000100510020-2"

"APPROVED FOR RELEASE: 06/05/2000 CIA-RDP86-00513R000100510020-2

1ST AND 2ND ORDERS | 3RD AND 4TH ORDERS

PROCESSES AND PROPERTIES INDEX

M

1

***The Oxidation and Intercrystalline Brittleness of Nickel.** N. W. Agzew (*Trudi Instituta Metallov* (*Trans. Inst. Metals, U.S.S.R.*), 1930, (7), 61-79; *C. Abs.*, 1931, **25**, 2660).—[In Russian.] Two grades of commercial nickel showed that nickel is brittle after having been annealed under atmospheric conditions at 800° and 1000° C. Intercrystalline oxidation is the cause of this brittleness.—S. G.

ASM-SLA METALLURGICAL LITERATURE CLASSIFICATION

COMMON ELEMENTS | OPEN | MATERIALS INDEX | COMMON VARIABLES INDEX | AUTHOR INDEX | 1ST AND 2ND LETTER | 2ND LETTER | 3RD AND 4TH ORDERS | P. GROUPS

APPROVED FOR RELEASE: 06/05/2000 CIA-RDP86-00513R000100510020-2"

"APPROVED FOR RELEASE: 06/05/2000 CIA-RDP86-00513R000100510020-2

1ST AND 2ND ORDERS

PROCESSES AND PROPERTIES INDEX

9

Transformations in the eutectoid alloys. N. AGEEV AND G. KURDYUMOV. *Physik. Z. Sowjetunion* 2, 140–8(1932).—The authors conclude that in the Cu-Al eutectoid the β-phase is an unstable supersatd. solid soln. of Al in Cu, which, like martensite, can be formed by surrounding the lattice without diffusion. H. STOERTZ

ASM-SLA METALLURGICAL LITERATURE CLASSIFICATION

APPROVED FOR RELEASE: 06/05/2000 CIA-RDP86-00513R000100510020-2"

"APPROVED FOR RELEASE: 06/05/2000 CIA-RDP86-00513R000100510020-2

PROCESSES AND PROPERTIES INDEX

2

M

*The Eutectoidal Decomposition of Solid Solutions of β-Copper Aluminium Alloys. N. W. Agrew and G. W. Kurljumow (*Metallurg* (*The Metallurgist*), 1932, 7, (9), 3-21; *Chem. Zentr.*, 1934, 105, I, 2344).—[In Russian.] Cf. *J. Inst. Metals*, 1933, 53, 237. X-ray and micrographic examination, and determinations of the hardness and coeff. of expansion show that the β-phase in copper–aluminium alloys decomposes on cooling into a eutectoidal mixture of (α + γ), both of which have face-centred cubic lattices, the γ lattice containing 52 atoms in the unit cell. No intermediate phase is formed during slow cooling through 540° C., all the properties conforming to a mixture of the α- and γ-phases. A stable intermediate stage is obtained only on very rapid cooling.
—A. R. P.

ASM-SLA METALLURGICAL LITERATURE CLASSIFICATION

APPROVED FOR RELEASE: 06/05/2000 CIA-RDP86-00513R000100510020-2"

"APPROVED FOR RELEASE: 06/05/2000 CIA-RDP86-00513R000100510020-2

PROCESSES AND PROPERTIES INDEX

M

2

*Physiochemical Researches on Solid Solutions of Gold and Copper. N. S. Kurnakow and N. W. Ageew (*Izvestia Instituta Fiziko-Khimicheskogo Analisa* (*Ann. Inst. anal. phys.-chim.*), 1933, 6, 25–46; *Chem. Zentr.*, 1934, 105, II, 1083).—[In Russian.] The decomposition of solid solutions of copper and gold into AuCu and $AuCu_3$ below 425°–450° C. has been demonstrated by measurements of the electrical resistance and its thermal coeff. at temperatures up to 600° C. Dilatometric measurements show that the solid solution range of $AuCu_3$ extends from 22 to 40 atomic-% gold and that of AuCu from 42·2 to 70 atomic-% gold. The formation of the compounds is accompanied by a sharp contraction in volume which does not appear when the alloys are quenched.—A. R. P.

ASM-SLA METALLURGICAL LITERATURE CLASSIFICATION

APPROVED FOR RELEASE: 06/05/2000 CIA-RDP86-00513R000100510020-2"

"APPROVED FOR RELEASE: 06/05/2000 CIA-RDP86-00513R000100510020-2

1ST AND 2ND ORDERS

PROCESSES AND PROPERTIES INDEX

M

2

COMMON ELEMENTS

COMMON VARIABLES INDEX

OPEN

MATERIALS INDEX

*On the Nature of Solid Solutions of Aluminium in Silver. N. Ageew and D. Shoyket (*Metallurg* (*Metallurgist*), 1934, (3), 38–42).—[In Russian.] The work of Phelps and Davey (*J. Inst. Metals*, 1933, 53, 129) is discussed and an exact measurement has been made of the parameter of the solid solution of the aluminium in silver. The calculated density is based on a simple replacement of atoms.—N. A.

ASM-SLA METALLURGICAL LITERATURE CLASSIFICATION

MATERIALS INDEX

3RD AND 4TH ORDERS

2ND LETTER

1ST AND 2ND LETTER

AUTHOR INDEX

APPROVED FOR RELEASE: 06/05/2000 CIA-RDP86-00513R000100510020-2"

"APPROVED FOR RELEASE: 06/05/2000 CIA-RDP86-00513R000100510020-2

PROCESSES AND PROPERTIES INDEX

2

*Rapid Potentiometric Method of Constructing Standard Curves for Working with Kurnakow's Pyrometer. N. W. Agcew and D. N. Shoyket (*Metallurg* (*Metallurgist*), 1934, (5), 83–85).—[In Russian.] The method described for constructing cooling curves when using the Kurnakow pyrometer obviates the necessity for frequent standardization against the melting point of pure metals.
—N. A.

ASM-SLA METALLURGICAL LITERATURE CLASSIFICATION

APPROVED FOR RELEASE: 06/05/2000 CIA-RDP86-00513R000100510020-2"

"APPROVED FOR RELEASE: 06/05/2000 CIA-RDP86-00513R000100510020-2

CA

9

PROCESSES AND PROPERTIES INDEX

Diagram of the state of silver alloys with zero to ten per cent aluminum. N. V. Ageev and D. N. Sholkhet. *Inst. anal. phys.-chim.* (U. S. S. R.) **7**, 59-73(1935); cf. C. A. **28**, 6079[8].—Specimens of Ag-Al alloys were held at 650-700° for several days and then either allowed to cool gradually within 15-20 days or water-quenched at definite temps. A diagramatic analogy in the state of the alloys of Cu, Ag and Au with Al was disclosed (cf. Heycock and Neville, C. A. **8**, 3540; Stockdale, C. A. **17**, 50). The soly. of Al is 0.5% in Cu, 5.4 in Ag and 2.5 in Au. All these systems form β-phases stable at high temps. and decompg. on cooling into eutectic mixts. The eutectic mixt. of Cu-Al is stable up to room temp., while that of Ag-Al on cooling forms a new β'-phase (Ag_3Al). X-ray study of the α-phase disclosed that the solid soln. is formed by simple substitution of atoms. The β'-phase decomposes on heating at 400° into a mixt. of α- and γ-phases. A disclosure was made of the existence of a double phase at 400-600° dividing the β- and β'-phases. The results of the microscopic and x-ray study of the limits of γ-phase at various temps. are tabulated. Chas. Blanc

ASM-SLA METALLURGICAL LITERATURE CLASSIFICATION

APPROVED FOR RELEASE: 06/05/2000 CIA-RDP86-00513R000100510020-2"

"APPROVED FOR RELEASE: 06/05/2000 CIA-RDP86-00513R000100510020-2

M

***The Physico-Chemical Investigation of the Phases of Variable Composition in the Gold-Copper System.** N. W. Agcew and D. N. Shoykhet (*Metallurg* (*Metallurgist*), 1935, (7), 86–100).—[In Russian.] The intensity of the reflexes in the Debye röntgenogram, indicates that, in alloys with a nearly stoicheiometric composition, the degree of order is 0·89 for AuCu and 0·92 for $AuCu_3$, i.e. about 10% of the atoms are out of place. With the addition of excess of gold or copper to form solid solutions, the degree of order decreases and appears to be smaller than that theoretically possible. The composition-degree of order curves for AuCu and $AuCu_3$ are similar in character, both being convex towards the copper side. The chief factor which determined the change in properties of solid solutions, is the degree of order in the lattice structure.

—N. A.

APPROVED FOR RELEASE: 06/05/2000 CIA-RDP86-00513R000100510020-2"

"APPROVED FOR RELEASE: 06/05/2000 CIA-RDP86-00513R000100510020-2

PROCESSES AND PROPERTIES INDEX

M

23

*Agcew, N. W., and D. N. Shoyket. *The Thermal Analysis of Metals and Alloys.* [In Russian.] Edited by N. S. Kurnakow. Pp. 180, with 100 illustrations. 1936. Leningrad: Izdatelstvo Kubitch. (Rbl. 2.50.)

ASM-SLA METALLURGICAL LITERATURE CLASSIFICATION

APPROVED FOR RELEASE: 06/05/2000 CIA-RDP86-00513R000100510020-2"

"APPROVED FOR RELEASE: 06/05/2000 CIA-RDP86-00513R000100510020-2

1ST AND 2ND ORDERS

3RD AND 4TH ORDERS

PROCESSES AND PROPERTIES INDEX

M

Physicochemical Investigation of Intermetallic Molecular Solid Solutions. N. Agrew (*Izvestia Akademii Nauk S.S.S.R.* (*Bull. Acad. Sci. U.R.S.S.*), **1936**, [Chim.], (2), 285-310).—[In Russian, with French summary.] Investigations of the crystal structure and of the nature of phases of variable composition in the systems: gold-copper, lead-sodium, thallium bismuth, silver-aluminium, iron silicon, iron-antimony, iron-aluminium, and copper-manganese aluminium show that these phases may be regarded as molecular solid solutions of intermetallic compounds. If the composition of the compound is beyond the homogeneity limit of the phase, the compound may be called "imaginary" and the phase a "berthollide." Compounds in dilute solid solutions are probably completely dissociated.—N. A.

ASM-SLA METALLURGICAL LITERATURE CLASSIFICATION

APPROVED FOR RELEASE: 06/05/2000 CIA-RDP86-00513R000100510020-2"

"APPROVED FOR RELEASE: 06/05/2000 CIA-RDP86-00513R000100510020-2

CA

2

Physicochemical examination of intermetallic molecular solid solutions. N. V. Agrev. *Bull. acad. sci. U. R. S. S. Classe sci. math. nat., Sér. chim.* No. 2, 285-318 (in French 318-19)(1940).—The solid solns. exhibit statistical distribution of atoms, variable compn. and a continuous variation of properties within the limits of homogeneity of the solid soln. The intermetallic phases are in most cases intermediate between the 2 extremes. The existence of dil. solid solns. was studied, but their no. was not sufficiently large for definite conclusions to be drawn. However, A. believes that in very dil. solns. chem. compds. dissoc. completely. The properties of the cond. mol. solns. are in a large measure detd. by the arrangement of the mol. or atoms. This is illustrated in such properties as elec. resistance and hardness and depends on the periodicity of the field of force of the lattice. X-ray analysis is believed to be a very important tool in physicochem. analysis. H. E. Messmore

ASM-SLA METALLURGICAL LITERATURE CLASSIFICATION

APPROVED FOR RELEASE: 06/05/2000 CIA-RDP86-00513R000100510020-2"

"APPROVED FOR RELEASE: 06/05/2000 CIA-RDP86-00513R000100510020-2

Influence of Impurities on the Properties of Magnesium Alloys. N. W. Ageew, M. I. Zamotorin, and D. N. Shoyket (*Metallurg* (*Metallurgist*), 1936, (3), 27–38; (4), 48–59).—[In Russian.] The influence was studied of silicon (up to 2%), iron (up to 0·18%), nitrogen (up to 1%), sodium (up to 0·08%), potassium (up to 0·72%), calcium (up to 0·09%), magnesium oxide (up to 1·0%), and chlorides (up to 0·51% Cl) on cast Elektron alloys containing aluminium 6–10, manganese 0–0·18, zinc 0 and 2·98, and copper 0 and 1·04%, and on rolled alloys containing aluminium 1·5–6, zinc 1–4·5, manganese 0–0·2, and copper 0–0·75%. Silicon causes strong absorption of gases, increase in porosity, greater tendency to segregation, increased contraction, greater hardness and brittleness, lower resistance to impact, and smaller elongation and reduction in area, but the change in mechanical properties with temperature is less the higher the % silicon, and there is a greater tendency to age-harden. Iron dissolves up to 0·2% reducing the contraction and increasing the hardness and tensile strength; it has no effect on ageing or rolling. Nitrogen reduces contraction, increases porosity, and lowers the mechanical properties at all temperatures. Sodium intensifies liquation, increases porosity, causes the formation of cracks in the liquation zone, and seriously affects the mechanical properties, the plasticity disappearing entirely with 0·0% sodium at room temperature and with only 0·3% sodium at 150°–300° C., while the tensile strength, elongation, and reduction in area decrease at high temperatures. Even as little as 0·09% sodium prevents hot extrusion of Elektron. Potassium has a similar effect to sodium, but does not impede rolling. Calcium is a good deoxidizer for magnesium and its alloys. Cast Elektron alloys even with 0·5% calcium have a clean surface free from oxide and nitrides. Calcium increases the density and, up to 1%, does not affect the mechanical properties, ageing, or rolling. Magnesia reduces liquation and shrinkage and prevents the development of transcrystallization. With 0·1% magnesia the mechanical properties are unaffected, but with 1% they all decrease.—N. A.

ASM-SLA METALLURGICAL LITERATURE CLASSIFICATION

APPROVED FOR RELEASE: 06/05/2000 CIA-RDP86-00513R000100510020-2"

"APPROVED FOR RELEASE: 06/05/2000 CIA-RDP86-00513R000100510020-2

1ST AND 2ND ORDERS

3RD AND 4TH ORDERS

PROCESSES AND PROPERTIES INDEX

BC

2-1

Solid solutions of indium and lead. N. V. Agrev and V. A. Agreva (Trans. Leningrad Ind. Inst., 1936, No. 4, 26—31).—Thermal and X-ray data are used in the construction of a modified diagram.

A. J. K.

COMMON ELEMENTS

OPEN

MATERIALS INDEX

ASM-SLA METALLURGICAL LITERATURE CLASSIFICATION

MATERIALS INDEX

AUTHOR INDEX

1ST AND 2ND LETTER

2ND LETTER

3RD AND 4TH ORDERS

1ST AND 2ND ORDERS

APPROVED FOR RELEASE: 06/05/2000 CIA-RDP86-00513R000100510020-2"

"APPROVED FOR RELEASE: 06/05/2000 CIA-RDP86-00513R000100510020-2

1ST AND 2ND ORDERS

PROCESSES AND PROPERTIES INDEX

M

1

†The Nature of Intermetallic Phases of Variable Composition. N. W. Ageew (*Izvestia Sektora Fiziko-Khimicheskogo Analiza* (*Ann. Sect. Analyse Phys.-Chim.*), 1936, 8, 175–200).—[In Russian.] Solid solutions, both atomic and molecular, are discussed. The existence of the latter in metallic systems is not confirmed by the available experimental data. Intermetallic phases can be divided into those with a congruent melting point (daltonides) and those without (bertollides). Daltonides can be metallic, metallo-homopolar, and metallo-ionic, according to the nature of the bonds. Bertollides generally belong to the metallo-homopolar type.—N. A.

COMMON ELEMENTS

OPEN

MATERIALS INDEX

ASM-SLA METALLURGICAL LITERATURE CLASSIFICATION

AUTHOR INDEX

1ST AND 2ND LETTER

2ND LETTER

2ND AND 4TH ORDERS

1ST ORDER

APPROVED FOR RELEASE: 06/05/2000 CIA-RDP86-00513R000100510020-2"

"APPROVED FOR RELEASE: 06/05/2000 CIA-RDP86-00513R000100510020-2

CA

2

The nature of molecular phases of variable composition in the system: gold-copper. N. V. Ageev and D. N. Sholkiet. *Ann. secteur anal. phys.-chim., Inst. chim. gén.* (U. S. S. R.) 9, 129-46(1936); cf. *C. A.* 29, 6494[1], Kurnakov and Ageev, *Ibid.* 6, 25(1933).— X-ray examn. by the wire and powder method of annealed AuCu and $AuCu_3$ in the Au–Cu system showed a cryst. lattice with a random distribution of the Au and Cu atoms. Similar results were obtained for Al-Fe alloys by Bradley and Jay (*C. A.* 26, 5532) and for Al-Mn alloys by Heusler (*C. A.* 28, 3368[9]). AuCu and $AuCu_3$ do not form a continuous series of solid solns. The character of the property changes in the formation of solid solns. indicates a complete analogy with the change of the degree of regularity. It proves that the chief factor governing the change of properties of a solid soln. with the change of concn. is the disturbance of the orderly distribution of atoms in it.

Chas. Blanc

ASM-SLA METALLURGICAL LITERATURE CLASSIFICATION

APPROVED FOR RELEASE: 06/05/2000 CIA-RDP86-00513R000100510020-2"

"APPROVED FOR RELEASE: 06/05/2000 CIA-RDP86-00513R000100510020-2

1ST AND 2ND ORDERS | 3RD AND 4TH ORDERS

PROCESSES AND PROPERTIES INDEX

2

*The Nature of the Solid Solution of Antimony in Lead. N. W. Agrew and I. W. Krotov (*J. Inst. Metals*, 1936, **59**, 301–308; discussion, 309–310; also (in Russian) *Trudi Leningrad. Indust. Inst.*, 1936, (4), 26–31).—X-ray analysis and density determinations show that the solid solution of antimony in lead is of the simple monatomic type. The thermodynamic analysis is not in contradiction to this conclusion if errors of the order of 2° C. are assumed to exist in the equilibrium diagram.—N. A.

ASM-SLA METALLURGICAL LITERATURE CLASSIFICATION

APPROVED FOR RELEASE: 06/05/2000 CIA-RDP86-00513R000100510020-2"

"APPROVED FOR RELEASE: 06/05/2000 CIA-RDP86-00513R000100510020-2

1ST AND 2ND ORDERS

3RD AND 4TH ORDERS

PROCESSES AND PROPERTIES INDEX

M

2

*X-Ray Investigation of Magnesium-Silver Alloys. N. W. Ageew and V. G. Kuznetsov (*Izvestia Akademii Nauk S.S.S.R.* (*Bull. Acad. Sci. U.R.S.S.*), 1937, [Chim.], (2), 289-309; English summary, 309-311).—[In Russian.] (*Cf. Met. Abs.*, this vol., p. 331. The existence of 4 phases in the system magnesium-silver is confirmed. The α-solid solution extends to 28 atomic-% magnesium, and its parameter increases linearly with increasing magnesium content. The β-phase, with a body-centred cubic lattice, is homogeneous between 47 and 55 atomic-% silver. Since the two kinds of atoms are regularly distributed at the lattice points, and maximum degree of order is shown by the alloy with 50 atomic-% silver, this phase appears to be MgAg, in which both silver and magnesium have limited solubilities. The γ-phase is a solid solution of magnesium in $AgMg_4$; it extends from 20·5 to 25 atomic-% silver, and has a hexagonal lattice, with 8 atoms per unit cell. The δ-phase is a solid solution of silver in magnesium, with a close-packed hexagonal lattice, the solubility of silver increasing from 0·2 atomic-% at 260° C. to 3·0 atomic-% at 440° C.—N. A.

ASM-SLA METALLURGICAL LITERATURE CLASSIFICATION

APPROVED FOR RELEASE: 06/05/2000 CIA-RDP86-00513R000100510020-2"

"APPROVED FOR RELEASE: 06/05/2000 CIA-RDP86-00513R000100510020-2

M

*X-Ray Study of Platinum-Ruthenium Alloys. N. W. Agrew and V. G. Kusnezov (*Izvest. Akad. Nauk S.S.S.R.* (*Bull. Acad. Sci. U.R.S.S.*), 1937, [Chim.], (4), 753-755).—[In Russian, with English summary.] (*Cf. Met. Abs.*, 1937, 4, 616. An X-ray study of platinum-ruthenium alloys, by the Debye method, showed the formation of solid solutions up to 70 atomic-% ruthenium. The lattice constant decreased from 3·915$_4$ A. (pure platinum) to 3·82$_8$ A.—N. A.

ASM-SLA METALLURGICAL LITERATURE CLASSIFICATION

APPROVED FOR RELEASE: 06/05/2000 CIA-RDP86-00513R000100510020-2"

"APPROVED FOR RELEASE: 06/05/2000 CIA-RDP86-00513R000100510020-2

1ST AND 2ND ORDERS

PROCESSES AND PROPERTIES INDEX

5

22

J151

?

†**Metallurgical Research in the U.S.S.R.** Nicholas W. Ageew (*Met. Ind. (Lond.)*, 1937, **50**, (1), 3 8).—Researches are proceeding at several of the principal physico-metallurgical laboratories in Russia on non-ferrous thermal equilibrium systems. Special attention has been given to the noble metals (platinum, palladium, gold), light metals (aluminium, magnesium), and to alloys of the iron group (iron, chromium, manganese). Intermetallic compounds have been examined by X-rays. In the light alloys research it is claimed that solubilities varying with temperature have been established for a number of systems, and that liquidus surfaces and boundaries of the ternary solid solutions of the more important industrial alloys have been fixed. Phase transformations have been studied, such as the β-phase in aluminium-copper alloys, and ageing of Duralumin and silicon-aluminium alloys. A *bibliography* of 35 references is given, of which about two-thirds relate to Russian publications.—J. E. N.

ASM-SLA METALLURGICAL LITERATURE CLASSIFICATION

APPROVED FOR RELEASE: 06/05/2000 CIA-RDP86-00513R000100510020-2"

"APPROVED FOR RELEASE: 06/05/2000 CIA-RDP86-00513R000100510020-2

1ST AND 2ND ORDERS

PROCESSES AND PROPERTIES INDEX

COMMON ELEMENTS

COMMON VARIABLES INDEX

*The Nature of the Solid Solution of Antimony in Lead. N. W. Ageew and I. V. Krotov (*Izvest. Sekt. Fiziko-Khimich. Analiza* (*Ann. Secteur Anal. Phys.-Chim.*), 1938, 10, 119-128).—[In Russian.] See *Met. Abs.*, 1936, 3, 653.—N. A.

OPEN

MATERIALS INDEX

ASM-SLA METALLURGICAL LITERATURE CLASSIFICATION

MATERIALS INDEX

AUTHOR INDEX

1ST AND 2ND LETTER

2ND LETTER

3RD AND 4TH ORDERS

1ST ORDERS

APPROVED FOR RELEASE: 06/05/2000 CIA-RDP86-00513R000100510020-2"

"APPROVED FOR RELEASE: 06/05/2000 CIA-RDP86-00513R000100510020-2

AGEYEV, N.

1st and 2nd orders

Processes and properties index

Unlimited solubility of metals in the solid state. N. Ageev. *Compt. rend. acad. sci. U. R. S. S.* 19, 65-8 (1938) (in English).—Theoretical. The conditions necessary for the formation of a continuous series of solid solns. are studied. It is shown that when the ratio of the no. of electrons to one atom for a metal with a face-centered cubic lattice exceeds 1.300, continuous series of solid solns. are no longer formed. If the solvent metal has 1 valence electron per atom and the solute metal 1 or none, the formation of solid solns. is unlimited; if the solute is bivalent, the satn. limit to this solid soln. is 36 at. % of the solute. As the valence of the solute increases, the limiting value decreases. When the no. of valence electrons of both metals is equal, the electronic concn. is const., and an unlimited series of solid solns. is possible. Co, Ni, Pt and Pd have zero valency; Au, Cu and Ag, one; As, Sb and Bi, five; Mo and W are anomalous. The solid solns. Cu-Au, Ag-Au, As-Sb, Sb-Bi, Mo-W, Cu-Ni, Au-Pd, Cu-Pt, Au-Ni and Co-Ni were considered. The observation that only metals which have similar crystal lattices form continuous series of solid solns. is a consequence of the electron conditions required by this theory. G. M. Petty

ASM-SLA METALLURGICAL LITERATURE CLASSIFICATION

APPROVED FOR RELEASE: 06/05/2000 CIA-RDP86-00513R000100510020-2"

"APPROVED FOR RELEASE: 06/05/2000 CIA-RDP86-00513R000100510020-2

AGEYEV, N.V.

1ST AND 2ND ORDER

PROCESSES AND PROPERTIES INDEX

19

S

Physico-Chemical Investigation of Ferro-Silicon. N. V. Ageev, N. N. Kurnakov, L. N. Guseva and O. K. Komenko-Gracheva. (Metallurg, 1940, No. 1, pp. 5-12). (In Russian). The authors describe an investigation of the physical properties of ferro-silicon. Alloys with silicon contents of 43·5–66·0% were prepared by melting, casting into heated moulds and cooling slowly to avoid cracking. In alloys with 43–53% of silicon, the structure consisted of FeSi dendrites against a background of large elongated crystals of the ζ-phase. The structure suggests that the ζ-phase is formed by a peritectic reaction between the molten alloy and the ε-phase. Alloys annealed for seven days at 950° C. showed decomposition of the ζ-phase into a eutectoid type of phase. Commercial 45% ferro-silicon had a peritectic structure made up of crystals of the ε-phase surrounded by the ζ-phase. Measurements of the electrical resistance and the temperature coefficient of electrical resistance of cast ferro-silicon showed no anomalies. The ζ-phase has a higher electrical resistance than the ε-phase. Microscopic and X-ray examination show that the ζ-phase has a homogeneity range of 53·54·5% silicon. The crystal structure of this phase was determined. The X-ray examination showed that on annealing the amount of the ζ-phase is reduced due to decomposition into silicon, ε-phase and an unidentified phase.

ASM-SLA METALLURGICAL LITERATURE CLASSIFICATION

APPROVED FOR RELEASE: 06/05/2000 CIA-RDP86-00513R000100510020-2"

"APPROVED FOR RELEASE: 06/05/2000 CIA-RDP86-00513R000100510020-2

Time as a factor in physicochemical analysis. N. V. Agaev. *Bull. acad. sci. U. R. S. S., Classe sci. chim.* 1940, 397–409 (in English, 403–6).—A discussion stressing the urgency of introducing the time coordinate in phys.-chem. analysis, as in investigation of interaction of metals, by constructing compn.-temp.-time and compn.-property-time diagrams. The change in the rates of interaction of metals illustrated by the example of Al-Fe and Ag-Cu alloys is used in support of this contention. J. G. T.

No. 3

2

ASM-SLA METALLURGICAL LITERATURE CLASSIFICATION

APPROVED FOR RELEASE: 06/05/2000 CIA-RDP86-00513R000100510020-2"

"APPROVED FOR RELEASE: 06/05/2000 CIA-RDP86-00513R000100510020-2

1ST AND 2ND ORDERS

3RD AND 4TH ORDERS

PROCESSES AND PROPERTIES INDEX

Ca

9

Laws of the structure of metallic alloys. N. V. Agrev. *Uspekhi Khim.* 9, 151-64(1940).—Review and theoretical. A. discusses solid solns., chem. compds., mol. solid solns., electron concns., degree of order, change of lattice parameters and the nature of the chem. bonds in metals, solid solns. and the intermetallic phases. F. H. Rathmann

COMMON ELEMENTS

COMMON VARIABLES INDEX

MATERIALS INDEX

OPEN

ASM-SLA METALLURGICAL LITERATURE CLASSIFICATION

AUTHOR INDEX

MATERIALS INDEX

1ST AND 2ND LETTER

2ND LETTER

3RD AND 4TH ORDERS

APPROVED FOR RELEASE: 06/05/2000 CIA-RDP86-00513R000100510020-2"

"APPROVED FOR RELEASE: 06/05/2000 CIA-RDP86-00513R000100510020-2

1ST AND 2ND ORDERS

PROCESSES AND PROPERTIES INDEX

3RD AND 4TH ORDERS

The Structure of the β Phase in Gold Zinc Alloys. N. W. Agerw and D. N. Shoykhet (*Izvest. Sekt. Fiziko-Khimich. Analiza.* (*Ann. Secteur Anal. Phys.-Chim.*), 1940, **12**, 165-170).—[In Russian.] The limits of homogeneity of the β phase were found by microscopic examination to be 47·5 and 52·0 atomic-% gold. Debye X-ray examination of the alloy with 50·49 atomic-% gold confirmed that the β phase has a cæsium chloride type of structure with 2 atoms per unit cell. The calculated density checks closely with the measured value. The position of the atoms in the β phase was calculated. The maximum degree of order occurs at the stoichiometric proportion of Au : Zn = 1 : 1. The order ⟶ disorder transformation sets in on heating above 500° C., but does not proceed to completion up to the melting point of 725° C. A. B.

COMMON ELEMENTS

MATERIALS INDEX

ASM-SLA METALLURGICAL LITERATURE CLASSIFICATION

APPROVED FOR RELEASE: 06/05/2000 CIA-RDP86-00513R000100510020-2"

"APPROVED FOR RELEASE: 06/05/2000 CIA-RDP86-00513R000100510020-2

PROCESSES AND PROPERTIES INDEX

***The Structure of the β and ε Phases in the Copper Antimony System.** N. W. Agrew and E. S. Makarov (*Izvest. Sekt. Fiziko-Khimich. Analiza.* (*Ann. Secteur Anal. Phys.-Chim.*), 1940, **13**, 171–176).—[In Russian.] Alloys with 60–70 wt.-% copper, investigated by microscopic examination and the Debye X-ray method, confirmed in general the equilibrium diagram of Murakami and Shibata (*Met. Abs.*, 1937, **4**, 36). The ε phase is homogeneous between 67·89 and 66·08% copper, which is more on the antimony side than is given by M. and S. The eutectoid point is situated at about 62·0% copper. Alloys with 60·00 to 64·04% copper consisted of the homogeneous β phase, the limit on the copper side being at 65% copper. The ε phase, in agreement with Morris-Jones and Evans (*Met. Abs.* (*J. Inst. Metals*), 1928, **39**, 538), was found to have a hexagonal close-packed lattice with a = 2·723–2·745, c = 4·322–4·340 A. The structure of quenched specimens of the β phase was found to be cubic with 16 atoms per unit cell and a parameter of 5·914 A. The β phase has an orderly arrangement of atoms resembling the $FeAl_3$ structure, and corresponds to the formula $Cu_{12}Sb_4$ (Cu_3Sb). A. B.

ASM-SLA METALLURGICAL LITERATURE CLASSIFICATION

APPROVED FOR RELEASE: 06/05/2000 CIA-RDP86-00513R000100510020-2"

"APPROVED FOR RELEASE: 06/05/2000 CIA-RDP86-00513R000100510020-2

2

M

THE SOLID SOLUTION OF SODIUM IN LEAD. N. W. AGEEW AND . YA. TALYZIN (IZVEST. SEKT. FIZIKO KHIMICH. ANALIZA. (ANT. SECTEUR ANAL. PHYS. CHIM) 1940 13, 251-255) (In Russian) The solid solubility of solium in lead was investigated by X-rays (Preston-type camera with cppper radiation), sp. gr. measurements, and Brinell hardness tests. In spite of the fact that the atomic radius of sodium is larger than that of lead, the lattice parameter of lead decreases as the sodium goes into solution. The limiting solubility of sodium in lead at 290°C was found to be 1.37 wt. %. The solid solution is of the simple substitution type. Density measurements gave results agreeing with the X-ray determiantion, while the hardness test gave a somewhat lower value for the solubility. the complete solubility curve was constructed. It whows that te solit solubility of sodium in lead foalls to 0.45wt. --% at room temperature.

ASM-SLA METALLURGICAL LITERATURE CLASSIFICATION

APPROVED FOR RELEASE: 06/05/2000 CIA-RDP86-00513R000100510020-2"

"APPROVED FOR RELEASE: 06/05/2000 CIA-RDP86-00513R000100510020-2

M

25

(Continued from pp. 39-40)

Khimiya Metallicheskikh Splavov. (The Chemistry of Metallic Alloys.) By N. A. Ageev. 15 × 22 cm. Pp. 120, with 82 illustrations. 1941. Moscow and Leningrad: Izdatel'stvo Akademii Nauk S.S.S.R. (6 R., 35 k.)

One's first impression on glancing through Professor Ageev's monograph is that the simplest way of describing it will be as the Russian equivalent of Dr. Hume-Rothery's "Structure of Metals and Alloys." Both have the same format and the same number of pages and both cover very much the same ground. There is a difference of emphasis, however, for whereas Dr. Hume-Rothery deals at length with primary solid solutions, Professor Ageev devotes a large part of his space to a discussion of intermediate phases. But it is not wise to press the comparison of the two books too far, since Professor Ageev's monograph is intended primarily as a connected account of the work on alloys on which he has himself been engaged during the last 15 [illegible] years.

Professor Ageev was a pupil of the famous Russian chemist N. S. Kurnakov, and since 1925 has carried out many studies of metallic systems by X-rays and by the methods of physico-chemical analysis associat[illegible] Particularly has he been preoccupied with the subject of "dalto[illegible] [illegible] due to Ku[illegible] which, so far as the revie[illegible] the types of phase which [illegible] to a phase based on an [illegible] If, however, the compo[illegible] limits of the phase fie[illegible] aluminium system), th[illegible] account of daltonide[illegible] zinc systems, and his [illegible] sodium, iron alloys, and [illegible] His recent work on the [illegible] (γ nickel-antimony) and a berthollide [illegible] solutions, and he concludes therefore that there [illegible] types of phase. It is proposed that continuous solid solutions between daltonides and berthollides should be called Kurnakov phases.

APPROVED FOR RELEASE: 06/05/2000 CIA-RDP86-00513R000100510020-2"

"APPROVED FOR RELEASE: 06/05/2000 CIA-RDP86-00513R000100510020-2

The Chemistry of Metallic Alloys. N. V. Agrov (*Izvest. Akad. Nauk S.S.S.R.*, **1941**, [Khim.], (6), 653–659).—[In Russian]. The reaction of metals to form solid solutions and intermetallic phases is determined by the electron configuration and atomic vol. of the components.—N. A.

ASM-SLA METALLURGICAL LITERATURE CLASSIFICATION

APPROVED FOR RELEASE: 06/05/2000 CIA-RDP86-00513R000100510020-2"

"APPROVED FOR RELEASE: 06/05/2000 CIA-RDP86-00513R000100510020-2

1ST AND 2ND ORDERS

PROCESSES AND PROPERTIES INDEX

Ca

9

The pyrophoric properties of alloys of the system Mn Sb. N. V. Ageev and R. S. Makarov. *Bull. acad. sci. U. R. S. S., Classe sci. chim.* 1943, 74-8.—The most pyrophoric alloy is one contg. 43.8 wt. % Sb, corresponding to Mn_3Sb. The constituents are fused under molten KCl-NaCl, cast at (88)°, and allowed to cool without further treatment. Addn. of 1% Mg almost completely suppresses the pyrophoric properties, 1% Na slightly increases them, and Li, K, Be, Ca and Zn are without effect. The alloy cannot be used in an ordinary lighter, since it must be struck a blow on the edge to produce a spark.

H. M. Leicester

C.A. : Vol. 38, 20 MAR 44

ASM-SLA METALLURGICAL LITERATURE CLASSIFICATION

APPROVED FOR RELEASE: 06/05/2000 CIA-RDP86-00513R000100510020-2"

"APPROVED FOR RELEASE: 06/05/2000 CIA-RDP86-00513R000100510020-2

Physico-Chemical Study of the Phases Having a Nickel Arsenide Structure in the Systems Iron-Antimony, Cobalt-Antimony, and Nickel Antimony. N. V. Agrev and E. S. Makarov (*Izvest. Akad. Nauk S.S.S.R.*, **1943**, (Khim.), (2), 87-97).—[In Russian.] (*V. Compt. rend.* (*Doklady*) *Acad. Sci. U.R.S.S.*, **1943**, **38**, 20; *Met. Abs.*, this vol., p. 110. The phases having a nickel arsenide structure in the nickel-antimony, cobalt-antimony, and iron-antimony systems have been studied by means of X-ray and microstructural examination and by determinations of electrical resistance and density. (1) The γ phase of the *nickel-antimony* system is found to exist over the range 46·4–54·4 at.-% antimony; it includes the compound NiSb and the phase is therefore a daltonide. Comparison of the density of the alloys as measured directly and as derived from lattice spacings shows that γ-phase alloys on the nickel-rich side of NiSb have structures of the interstitial type, while those on the antimony-rich side have structures of the defect type. (2) The γ phase of the *cobalt-antimony* system lies in the range 43·4–49·2 at.-% antimony; this range does not embrace the compound CoSb and the phase is therefore a berthollide. It has a structure of the interstitial type. (3) The ε phase of the *iron-antimony* system exists over the range 42–48 at.-% antimony and is likewise a berthollide, being formed by the intrusion of iron atoms interstitially into the lattice of the hypothetical compound FeSb. The hardness, heat of formation, melting point, and interatomic distances of the three phases are compared, and the view is advanced that the strength of chemical linkage decreases in the order: NiSb > CoSb > FeSb.—N. B. V.

ASM-SLA METALLURGICAL LITERATURE CLASSIFICATION

APPROVED FOR RELEASE: 06/05/2000 CIA-RDP86-00513R000100510020-2"

"APPROVED FOR RELEASE: 06/05/2000 CIA-RDP86-00513R000100510020-2

1ST AND 2ND ORDERS

PROCESSES AND PROPERTIES INDEX

3RD AND 4TH ORDERS

207

3

***Physico-Chemical Study of the Phases Having a Nickel Arsenide Structure in the Systems Iron-Antimony-Nickel and Iron-Antimony-Cobalt.** N. V. Ageev and E. S. Makarov (*Izvest. Akad. Nauk S.S.S.R.*, **1948**, [Khim.], (3), 161–169).—[In Russian.] (*Cf.* preceding abstract. It is shown that in the iron-antimony-nickel (or cobalt) system an uninterrupted series of solid solutions (K phase) is formed between the γ phase of the nickel (or cobalt)-antimony system and the ε phase of the iron-antimony system. The microstructure, electrical resistance, and lattice parameter of these solid solutions with the nickel arsenide structure have been studied, and the limits of existence of the solutions determined. Alloys in the K phase field lying on the iron-nickel-rich side of the line FeSb–NiSb have a structure of the interstitial type; those on the antimony-rich side have a defect lattice. In the iron-antimony-cobalt system, the K phase alloys have an interstitial-type structure. The existence of an uninterrupted series of solid solutions between a daltonide (γ Ni–Sb) and a berthollide (ε Fe–Sb) demonstrates the essentially identical nature of these two types of phase. It is proposed that alloys of the K phase type shall be called Kurnakov phases.—N. B. V.

COMMON ELEMENTS

MATERIALS INDEX

ASM-SLA METALLURGICAL LITERATURE CLASSIFICATION

APPROVED FOR RELEASE: 06/05/2000 CIA-RDP86-00513R000100510020-2"

"APPROVED FOR RELEASE: 06/05/2000 CIA-RDP86-00513R000100510020-2

The relation between daltonide and bertholide phases in metal systems. N. V. Agrov and E. S. Makarov. J. Gen. Chem. (U. S. S. R.) 13, 942-8(1943)(English summary)) cf. C. A. 38, 1P.—On the basis of data in the literature it is concluded that daltonide and bertholide phases are identical chemically, i. e., both have as a basis a definite chem. compd. There is a continuous transition between the 2 phases in respect to temp. and chem. compn. References. O. M. Kosolapoff

No. 3

2

ASM-SLA METALLURGICAL LITERATURE CLASSIFICATION

APPROVED FOR RELEASE: 06/05/2000 CIA-RDP86-00513R000100510020-2"

"APPROVED FOR RELEASE: 06/05/2000 CIA-RDP86-00513R000100510020-2

M

2

Kurnakov Phases. N. A. Ageev (*Izvest. Sekt. Fiziko-Khim. Anal.*, 1943, 16, (1), 119–126).—[In Russian]. The results of the investigation of a series of metallic systems (silver-magnesium, gold-zinc, nickel-antimony, lead-sodium, iron-antimony, iron-nickel-antimony) show that chemical compounds

appear to be the cases of many intermatallic phases. Daltonides, bertollides and Kurnakov phases may be regarded as solid solutions in chemical compounds. It is proposed to designate as Kurnakov phases those phases in ternary systems in which there is found a continuous transition from a daltonide in one binary system to a bertollide in another binary system.

NA

ASM-SLA METALLURGICAL LITERATURE CLASSIFICATION

APPROVED FOR RELEASE: 06/05/2000 CIA-RDP86-00513R000100510020-2"

"APPROVED FOR RELEASE: 06/05/2000 CIA-RDP86-00513R000100510020-2

PROCESSES AND PROPERTIES INDEX

***Continuous Transition Between the Daltonide and the Berthollide Phases in the System Iron-Nickel-Antimony.** N. V. Agrev and E. S. Makarov (*Compt. rend.* (*Doklady*) *Acad. Sci. U.R.S.S.*, 1943, 38, (1), 20-21).—[In English.] In the nickel-antimony system a phase with the nickel arsenide type of structure exists between 46·4 and 54·4 at.-% antimony. Property-composition curves give sharp peaks at the composition NiSb, showing the phase to be a "daltonide." Alloys containing an excess of nickel over that required for NiSb are built up according to an interstitial plan, while those with a deficit of nickel belong to the class of structures with defect lattices. In the iron-antimony system the corresponding phase with the nickel arsenide structure is stable from 42 to 48 at.-% antimony. This range does not include the composition FeSb and the phase is a "berthollide"; it has an excess of iron and is of the interstitial type of structure. In the system iron-nickel-antimony a continuous series of solid solutions exists between these two phases. These ternary alloys have the nickel arsenide structure, while those that have more iron and nickel or more antimony than corresponds with the line NiSb-FeSb have interstitial or defect structures, respectively.

—G. V. R.

ASM-SLA METALLURGICAL LITERATURE CLASSIFICATION

APPROVED FOR RELEASE: 06/05/2000 CIA-RDP86-00513R000100510020-2"

"APPROVED FOR RELEASE: 06/05/2000 CIA-RDP86-00513R000100510020-2

AGEYEV, N. V.

"Continuous transition between the daltonide and the berthollide phases in the system Fe-Ni-Sb." The alloys were prepared from electrolytic Fe, Ni and Sb, homogenized at 600° for 3 days, slowly cooled at room temperature and then studied. These studies show the formation of a continuous series of solid solns. between 2 isomorphous phases, one of which is daltonide (I) and the other a berthollide (II) (as is the case with the system investigated), is a very representative instance of a continuous transition from I to II and points to the common genetic nature of these compounds. (Published in the Compt. Rend., Acad. Sci., URSS, 38, 20-1, 1943 (in English)

C. A., Vol. 38, Jan 10-June 20, 1944.

APPROVED FOR RELEASE: 06/05/2000 CIA-RDP86-00513R000100510020-2"