"APPROVED FOR RELEASE: 03/20/2001 CIA-RDP86-00513R000101520005-7

From the Committee of Acoustics. Symposium on the Distinctness of Spoken Language SOV/30-58-8-22/43

Czechoslovakian and four by Soviet scientists:

I.B. Slavik, I. Vakhek } Czechoslovakia (Chekhoslovakiya), reported on a new method of determining the distinctness of language.

I. Vakhek in the discussion gave a report on methods of compiling articulation tables.

L.R. Zinder (USSR) spoke about linguistic principles in the compilation of articulation tables.

B.I. Frid (USSR) spoke about the relations between the distinctness of syllables and of words.

Ye.Yu. Gurbanov (USSR) reported on problems connected with the practical use of articulation tables.

Yu.S. Bykov (USSR) compared the efficiency of various systems of articulation measurements.

The scientists participating in the symposium came to an agreement concerning the problems under discussion. It was considered to be convenient to distinguish between the concepts of distinctness and understandability. It was desired to include the investigation of problems of the estimation of

Card 2/3

APPROVED FOR RELEASE: 03/20/2001 CIA-RDP86-00513R000101520005-7"

"APPROVED FOR RELEASE: 03/20/2001 CIA-RDP86-00513R000101520005-7

From the Committee of Acoustics. **Symposium** on the Distinctness of Spoken Language SOV/30-58-8-22/43

language reproduction into the plan of scientific collaboration between the USSR and Czechoslovakia.

Card 3/3

APPROVED FOR RELEASE: 03/20/2001 CIA-RDP86-00513R000101520005-7"

"APPROVED FOR RELEASE: 03/20/2001 CIA-RDP86-00513R000101520005-7

AN DREYEV, N. N.

21(0),24(0) PHASE I BOOK EXPLOITATION SOV/

Akademiya nauk SSSR. Fizicheskiy institut

Issledovaniya po eksperimental'noy i teoreticheskoy fizike; [sbornik] (Studies on Experimental and Theoretical Physics; Collection of Articles) Moscow, Izd-vo AN SSSR, 1959. 304 p. Errata slip inserted. 2,300 copies printed.

Ed.: I. L. Fabelinskiy, Doctor of Physical and Mathematical Sciences; Eds. of Publishing House: A. L. Chernyak and V. G. Berkgaut. Tech. Ed.: Yu. V. Rylina; Commission for Publishing the Collection in Memory of Grigoriya Samuilovich Landsberg: I. Ye. Tamm (Chairman), Academician; M. A. Leontovich, Academician; P. A. Bazhulin, Doctor of Physical and Mathematical Sciences; S. L. Mandel'shtam, Doctor of Physical and Mathematical Sciences; I. L. Fabelinskiy, Doctor of Physical and Mathematical Sciences; F. S. Landsberg-Baryshanskaya, Candidate of Physical and Mathematical Sciences; and G. P. Motulevich (Secretary), Candidate of Physical and Mathematical Sciences.

PURPOSE: This book is intended for physicists and researchers engaged in the study of electromagnetic radiations and their role in investigating the structure and composition of materials.

COVERAGE: The collection contains 30 articles which review investigations in spectroscopy, sonics, molecular optics, semiconductor physics, nuclear physics, and other branches of physics. The introductory chapter gives a biographical profile of G. S. Landsberg, Professor and Head of the Department of Optics of the Division of Physical Technology at Moscow University, and reviews his work in Rayleigh scattering, combat gases, spectral analysis of metals, etc. No personalities are mentioned. References accompany each article.

Bazhulin, P. A., V. I. Malyshev, and M. M. Sushchinskiy. The Work of G. S. Landsberg in the Field of Molecular Spectroscopy 17

Abramson, I. S., and A. N. Mogilevskiy. Investigation of Transformation Processes in an Activated Discharge Generator Operating Under Conditions of Low Arc Currents 27

Aleksanyan, V. T., Kh. Ye. Sterin, A. L. Liberman, I. M. Kuznetsova, N. I. Tyun'kina, and B. A. Kazanskiy. The Possibility of Establishing the Configuration of Stereoisomeric Dialkylcyclohexane on the Basis of a Combined Scattering Spectrum 43

~~Andreyev, N. N.~~ Standing Sound Waves of Large Amplitude 53

Bazhulin, P. A., and A. I. Sokolovskaya. Investigation of the Relation of the Width of Combined Scattering Lines to Temperature 56

Butayeva, F. A., and V. A. Fabrikant. A Medium With Negative Absorption Coefficient 62

Vladimirskiy, V. V. Nuclear Transitions in Nonspherical Nuclei 71

Vol'kenshteyn, M. V. Optical Properties of Substances in the Vitreous State 80

Vul, B. M., V. S. Vavilov, and A. P. Shotov. The Question of Impact Ionization in Semiconductors 95

Vul'fson, K. S. New Methods of Increasing the Effectiveness of Radiation Thermocouples 100

Ginzburg, V. L., and A. P. Levanyuk. Scattering of Light Near Points of Phase Transition of the Second Type and the Critical Curie Point 104

Isakovich, M. A. Irradiation of an Elastic Wall Vibrating Under the Action of Statistically Distributed Forces 117

Levin, L. M. The Dimming of Light by a Cloud 121

Mazing, M. A., S. L. Mandel'shtam, and V. G. Koloshnikov. The Broadening and Shifting of the Spectral Lines of a Gas Discharge in Plasma 128

Malyshev, V. I., and V. N. Murzin. Investigation of the Hydrogen Bond in Substances Whose Molecules Contain Two Hydroxyl Groups 134

APPROVED FOR RELEASE: 03/20/2001 CIA-RDP86-00513R000101520005-7"

"APPROVED FOR RELEASE: 03/20/2001 CIA-RDP86-00513R000101520005-7

USSR

Andreyev, N. N.

1. Following are titles and authors of some of the papers to be presented at subject Congress:

USSR

AKAN'TEVA, A. A., Acoustics Institute, USSR Academy of Sciences, Moscow - "Barium-titanate cylindrical transducer radiating along the axis"

ANDREYEV, N. N., Acoustics Institute, USSR Academy of Sciences, Moscow - "Some questions of non-linear acoustics"

BALYAN, S. A., and KUDRIATSEV, B. B., Laboratory for Molecular Acoustics, Moscow Oblast Institute for Pedagogics - "Sound dispersion in a liquid mixture, the components of which form a chemical compound"

CHISTOVICH, L., Pavlov Institute of Physiology, USSR Academy of Sciences, Leningrad - "Mutual masking of clicks following in rapid successica and their loudness discrimination"

GERSUNI, Grigoriy V., Pavlov Institute of Physiology, USSR Academy of Sciences, Leningrad - "On the regulation of characteristics of the auditory system"

GOL'DBERG, G. A., Acoustics Institute, USSR Academy of Sciences, Moscow - "On the statistical reverberation theory"

GOLYAMINA, I. P., Acoustics Institute, USSR Academy of Sciences, Moscow - "Study of magnetically exact sound transformers from ferrites"

GUSEVICH, A. S., Institute of Physics of the Atmosphere, USSR Academy of Sciences, Moscow - "Acoustic microanemometer"

ILYASHUK, Yu. M., Laboratory for Combating Noise, Institute for Labor Protection, Leningrad - "Study of the dynamic characteristics of noise measurement devices and problems of standardizing them"

KALLISTRATOVA, M. A., Institute of Physics of the Atmosphere, USSR Academy of Sciences, Moscow - "Experimental investigation of sound scattering in the atmosphere"

KRASILNIKOV, V. A., and ZARENGO, L. K., Acoustics Institute, USSR Academy of Sciences, Moscow - "Some questions of non-linear acoustics in liquids"

KUDRIATSEV, B. B., Laboratory for Molecular Acoustics, Moscow Oblast Institute for Pedagogics - "Sound dispersion in liquids"

C O N F I D E N T I A L

Excerpts from the Progress and Information Circular, reports to be submitted for the Third Intl. Congress on Acoustics, IUPAP, Stuttgart, GFR, 1-8 Sep 1959.

APPROVED FOR RELEASE: 03/20/2001 CIA-RDP86-00513R000101520005-7"

"APPROVED FOR RELEASE: 03/20/2001 CIA-RDP86-00513R000101520005-7

GAUSS, Karl Fridrikh [Gauss, Karl Friedrich] [deceased]; DEM'YANOV, V.B. kand.fiz.-matem.nauk [translator]; VINOGRADOV, I.M., akademik, obshchiy red.; PETROVSKIY, I.G., akademik, red.; KUZNETSOV, I.V., kand.filos.nauk, red.; ANDREYEV, N.N., akademik, red.; KAZANSKIY, B.A., akademik, red.; SHCHERBAKOV, D.I., akademik, red.; YUDIN, P.F., akademik, red.; DELONE, B.N., red.; KOSHTOYANTS, Kh.S., red.; SAMARIN, A.M., red.; LEBEDEV, D.M., prof., red.; FIGUROVSKIY, N.A., prof., red.; RYVKIN, A.Z., red.izd-va; MAKOGONOVA, I.A., tekhn.red.

[Works pertaining to the theory of numbers] Trudy po teorii chisel. Obshchaia red. I.M.Vinogradova. Kommentarii B.N.Delone. Moskva, Izd-vo Akad.nauk SSSR, 1959. 978 p. (MIRA 13:2)

1. Chleny-korrespondenty AN SSSR (for Delone, Koshtoyants, Samarin).

(Numbers, Theory of)

APPROVED FOR RELEASE: 03/20/2001 CIA-RDP86-00513R000101520005-7"

"APPROVED FOR RELEASE: 03/20/2001 CIA-RDP86-00513R000101520005-7

24(1)

SOV/26-59-2-6/53

AUTHOR: Andreyev, N.N., Academician (Moscow)

TITLE: A Deeper Inquiry Into the Theory of Acoustics (Glubzhe razrabatyvat' teoriyu akustiki)

PERIODICAL: Priroda, 1959, Nr 2, pp 15-16 (USSR)

ABSTRACT: It is not yet possible to create an inexpensive and efficient partition or screen to deaden the noise of a big city, its industry, etc. Though research is being conducted in many countries (in the USSR by the Laboratory of the Institute of Acoustics of AS USSR) to evolve a general theory of so-called "non-linear acoustics", no solution has been obtained. There is 1 photograph.

ASSOCIATION: Akusticheskiy Institut Akademii Nauk SSSR (Institute of Acoustics of the AS USSR - Moscow)

Card 1/1

APPROVED FOR RELEASE: 03/20/2001 CIA-RDP86-00513R000101520005-7"

"APPROVED FOR RELEASE: 03/20/2001 CIA-RDP86-00513R000101520005-7

MENDELEYEV, Dmitriy Ivanovich [deceased]; KEDROV, B.M., red.; PETROVSKIY, I.G., akademik, red.; ANDREYEV, N.N., akademik, red.; BYKOV, K.M., akademik, red. [deceased]; KAZANSKIY, B.A., akademik, red.; SHMIDT, O.Yu., akademik, red. [deceased]; SHCHERBAKOV, D.I., red.; YUDIN, P.F., akademik, red.; DELONE, B.N., red.; KOSHTOYANTS, Kh.S., red.; SAMARIN, A.M., red.; LEBEDEV, D.M., prof., red.; FIGUROVSKIY, N.A., prof., red.; KUZNETSOV, I.V., kand.filosof.nauk, red.; TRIFONOV, D.N., red.izd-va; NOVICHKOVA, N.D., tekhn.red.

[Periodic law; supplementary materials] Periodicheskii zakon; dopolnitel'nye materialy. Red.i kommentarii B.M.Kedrova. Moskva, Izd-vo Akad.nauk SSSR, 1960. 711 p. (MIRA 14:2)

1. Chleny-korrespondenty AN SSSR (for Delone, Koshtoyants, Samarin). (Periodic law)

APPROVED FOR RELEASE: 03/20/2001 CIA-RDP86-00513R000101520005-7"

"APPROVED FOR RELEASE: 03/20/2001 CIA-RDP86-00513R000101520005-7

PASTER, Lui [Pasteur, Louis]; IMSHENETSKIY, A.A., red.; PETROVSKIY, I.G., akademik, red.; ANDREYEV, N.N., akademik, red.; BYKOV, K.M., akademik, red. [deceased]; KAZANSKIY, B.A., akademik, red.; OPARIN, A.I., akademik, red.; SHMIDT, O.Yu., akademik, red. [deceased]; SHCHERBAKOV, D.I., akademik, red.; YUDIN, P.F., akademik, red.; KOSHTOYANTS, Kh.S., red.; SAMARIN, A.M., red.; MAKSIMOV, A.A., red.; LEBEDEV, D.M., doktor geograf.nauk, red.; FIGUROVSKIY, N.A., doktor khim.nauk, red.; KUZNETSOV, I.V., kand. filosof.nauk, red.; OZNOBISHIN, D.V., kand.istor.nauk, red.; MATVEYENKO, T.A., red.izd-va; DOROKHINA, I.N., tekhn.red.

[Selected works in two volumes] Izbrannye trudy v dvukh tomakh. Red.A.A.Imshenetskogo. Moskva, Izd-vo Akad.nauk SSSR. Vol.1. 1960. 1012 p. (MIRA 13:11)

1. Chleny-korrespondenty AN SSSR (for Imshenetskiy, Koshtoyants, Samarin, Maksimov).
(MICROBIOLOGY)

APPROVED FOR RELEASE: 03/20/2001 CIA-RDP86-00513R000101520005-7"

"APPROVED FOR RELEASE: 03/20/2001 CIA-RDP86-00513R000101520005-7

ANDREYEV, N.N.

Proceedings on vibration problems. Akust. zhur. 7 no.1:121-122 '61. (MIRA 14:4)

(Poland--Vibration)

APPROVED FOR RELEASE: 03/20/2001 CIA-RDP86-00513R000101520005-7"

"APPROVED FOR RELEASE: 03/20/2001 CIA-RDP86-00513R000101520005-7

GAYUI, Rene Zhyust [Hauy, Rene-Just]; SHAFRANOVSKIY, I.I., prof.; ZABOTKINA, O.S.[translator]; STRATANOVSKIY, G.A.[translator]; SHUBNIKOV, A.V., akademik, red.; BOKIY, G.B., red.; PETROVSKIY, I.G., akademik, red.; ANDREYEV, N.N., akademik, red.; KAZANSKIY, B.A., akademik, red.; YUDIN, P.F., akademik, red.; DELONE, B.N., red.; SAMARIN, A.M., red.; ZUBOV, V.P., prof.,red; LEBEDEV, D.M., prof., red.; FIGUROVSKIY, N.A., prof., red.; KUZNETSOV, I.V., kand. filos. nauk, red.; OZNOBISHIN, D.V.,kand. istor. nauk, red.; SUSHKOVA, T.I., red. izd-va; SMIRNOVA, A.V., tekhn. red.

[Structure of crystals; selected works] Struktura kristallov; izbrannye trudy. Sostavlenie, stat'ia i primechaniia I.I. Shafranovskogo. Redaktsiia A.V.Shubnikova i G.B.Bokiia. Moskva, Izd-vo Akad. nauk SSSR, 1962. 175 p. Translated from the French. (MIRA 15:3)

1. Chlen-korrespondent Akademii nauk SSSR (for Bokiy, Delone, Samarin).

(Crystallography)

APPROVED FOR RELEASE: 03/20/2001 CIA-RDP86-00513R000101520005-7"

"APPROVED FOR RELEASE: 03/20/2001 CIA-RDP86-00513R000101520005-7

AGRIKOLA, Georgiy [Agricola, Georg]; GAL'MINAS, V.A.[translator]; DROBINSKIY, A.I.[translator]; SHUKHARDIN, S.V., red.; PETROVSKIY, I.G., akademik, red.; ANDREYEV, N.N., akademik, red.; KAZANSKIY, B.A., akademik, red.; YUDIN, P.F., akademik, red.; DELONE, B.N., red.; SAMARIN, A.M., red.; ZUBOV, V.P., prof., red.; LEBEDEV, D.M., prof., red.; FIGUROVSKIY, N.A., prof., red.; KUZNETSOV, I.V., doktor filos. nauk, red.; BORODINA, R.M., red. izd-va; YEPIFANOVA, L.V., tekhn. red.; DOROKHINA, I.N., tekhn. red.

[Mining and metallurgy; in twelve books]O gornom dele i metallurgii; v dvenadtsati knigakh. Red. S.V.Shukhardina, perevod i primechaniia V.A.Gal'minasa i A.I.Drobinskogo. Moskva, Izd-vo Akad. nauk SSSR, 1962. 597 p. (MIRA 15:8)

1. Chlen-korrespondent Akademii nauk SSSR (for Delone, Samarin).
(Mines and mineral resources)
(Metalwork)

APPROVED FOR RELEASE: 03/20/2001 CIA-RDP86-00513R000101520005-7"

"APPROVED FOR RELEASE: 03/20/2001 CIA-RDP86-00513R000101520005-7

ANDREYEV, N.N., akademik, otv. red.; LYAMSHEV, L.M., kand. fiz.-matem. nauk, otv. red.; GUROV, K.P., red.izd-va; POLYAKOVA, T.V., tekhn. red.

[Problems of modern acoustics] Problemy sovremennoi akustiki. Moskva, Izd-vo AN SSSR, 1963. 174 p. (MIRA 16:9)

1. Moscow. Vsesoyuznyy institut nauchnoy i i tekhnicheskoy informatsii.

(Sound)

APPROVED FOR RELEASE: 03/20/2001 CIA-RDP86-00513R000101520005-7"

"APPROVED FOR RELEASE: 03/20/2001 CIA-RDP86-00513R000101520005-7

ANDREYEV, N.N., dots.; ACHKASOV, K.A., st. prepodavatel'; DOLZHENKOV, A.T., dots.; DOKUCHAYEVA, A.P., dots.; KISELEV, I.I., dots.; KOZLOV, I.P., st. prepodavatel'; TROFIMOV, V.I., dots.; PESTRYAKOV, A.I., nauchnyy red.; SHALYT, N.A., red.; TOKER, A.M., tekhn. red.

[Manual for the young agricultural machinery operator] Spravochnik molodogo mekhanizatora sel'skogo khoziaistva. Pod red. A.T.Dolzhenkova. Izd.2., ispr. i dop. Moskva, Proftekhizdat, 1963. 653 p. (MIRA 16:6)

1. Fakul'tet mekhanizatsii Moskovskoy akademii im. K.A. Timiryazeva (for all except Pestryakov, Shalyt, Toker).
(Agricultural machinery)

APPROVED FOR RELEASE: 03/20/2001 CIA-RDP86-00513R000101520005-7"

"APPROVED FOR RELEASE: 03/20/2001 CIA-RDP86-00513R000101520005-7

ANDREYEV, N. F.

USSR/Chemistry - Alcohols
Chemistry - Catalysis

Jan 48

"Studies in the Field of Catalytic Conversion of Alcohols into Diviny1 Series Hydrocarbons," Yu. A. Gorin, M. I. Danilina, N. F. Andreyev, All-Union Sci Res Inst imeni S. V. Lebedev, 7½ pp

"Zhur Obshch Khim" Vol XVIII (LXXX), No 6

Series, 12th article. Investigates reaction of a 2:1 mixture of ethyl alcohol and methylethylketone on S. V. Lebedev's midified catalyst. Shows that diethylene and ethylene hydrocarbons with six carbon atoms are formed. The diethylene hydrocarbon has a conjugate system and is hexadiene- 2,4. The ethylene hydrocarbon is hexene-2. Pseudobutylene and insoluble condensation products are also formed. Suggests scheme of formation of hexadiene-2,4 based on principles of formation of piperylene from a mixture of alcohol and acetone. Submitted 9 Apr 1947

PA 9/49T13

APPROVED FOR RELEASE: 03/20/2001 CIA-RDP86-00513R000101520005-7"

"APPROVED FOR RELEASE: 03/20/2001 CIA-RDP86-00513R000101520005-7

ANDREYEV, N.P., inzhener.

Grinding quicklime on crusher-roll mills. Biul.stroi.tekh. 10 no.12:12-13 Jl '53. (MLRA 6:8)
(Crushing machinery)

APPROVED FOR RELEASE: 03/20/2001 CIA-RDP86-00513R000101520005-7"

"APPROVED FOR RELEASE: 03/20/2001 CIA-RDP86-00513R000101520005-7

ANDREYEV, N.P.; KOLOKOLOV, N.M., inzhener, redaktor.

[Progressive work methods for constructers of railroad bridges] Peredovye metody truda stroitelei zheleznodorozhnykh mostov. Moskva, Gos. transp. zhel-dor. izd-vo, 1953. 41 p. (MLRA 7:6)
(Bridges--Construction)

APPROVED FOR RELEASE: 03/20/2001 CIA-RDP86-00513R000101520005-7"

"APPROVED FOR RELEASE: 03/20/2001 CIA-RDP86-00513R000101520005-7

Andreyev, Nikolay Petrovich

ANDREYEV, Nikolay Petrovich; FAYNSHTEYN, Iosif Samuilovich; DUBROVSKIY, Aleksandr Ivanovich; KARAMYSHEV, I.A., red.; VERINA, G.P., tekhn.red.

[Manual on the building of structures] Spravochnik po postroike iskusstvennykh sooruzhenii. Moskva, Gos.transp.zhel-dor. izd-vo, 1957. 539 p. (MIRA 10:12)

(Railroad engineering)

APPROVED FOR RELEASE: 03/20/2001 CIA-RDP86-00513R000101520005-7"

"APPROVED FOR RELEASE: 03/20/2001 CIA-RDP86-00513R000101520005-7

ANDREYEV, Nikolay Petrovich, inzh.; DUBROVSKIY, Aleksandr Ivanovich, inzh.; FAYNSHTEYN, Iosif Samuilovich, inzh.; AKIMOV, I.S., inzh., retsenzent; MITROFANOV, Yu.M., inzh., retsenzent; DONSKOY, V.P., inzh., retsenzent; KARAMYSHEV, I.A., inzh., red.; KHITROVA, N.A., tekhn. red.

[Handbook on the construction of engineering structures] Spravochnik po postroike iskusstvennykh sooruzhenii. Izd.2., dop. i perer. Moskva, Transzheldorizdat, 1962. 511 p. (MIRA 15:12)

(Railroad bridges) (Culverts)

APPROVED FOR RELEASE: 03/20/2001 CIA-RDP86-00513R000101520005-7"

"APPROVED FOR RELEASE: 03/20/2001 CIA-RDP86-00513R000101520005-7

SEMENOV, N.R., polkovnik; GRIGOR'YEV, G.M., polkovnik; VESELOV, S.P., inzh.-polkovnik; ANDREYEV, N.R., polkovnik; ROMANOV, D.K., kapitan 1 ranga; YEMEL'YANOV, V.T., polkovnik, red.

[Organization and armament of armies and navies of capitalist countries] Organizatsiia i vooruzhenie armii i flotov kapitalisticheskikh gosudarstv. Moskva, Voenizdat, 1965. 545 p. (MIRA 19:1)

APPROVED FOR RELEASE: 03/20/2001 CIA-RDP86-00513R000101520005-7"

"APPROVED FOR RELEASE: 03/20/2001 CIA-RDP86-00513R000101520005-7

ANDREYEV, N. S.

Structure of [illegible] glasses, in connexion with opalescence. IV. Dependence of structure of glasses on duration of heating at constant temperature. R. A. Poral-Koshits, D. I. Levin and N. S. Andreev (Izv. Akad. Nauk SSSR, Otd. khim. Nauk, 1958, 287—293).—The transparency of the glass shifts from lower to higher λ with increasing duration of heating at 650°, from 1 to 8 hr. at a given λ; the increase in opacity is greatest from the 3rd to the 6th hr. The effect is ascribed to increase in submicro-heterogeneity of the glasses.

R. Truscott

APPROVED FOR RELEASE: 03/20/2001 CIA-RDP86-00513R000101520005-7"

"APPROVED FOR RELEASE: 03/20/2001 CIA-RDP86-00513R000101520005-7

ANDREYEV, N.S.

APPROVED FOR RELEASE: 03/20/2001 CIA-RDP86-00513R000101520005-7"

"APPROVED FOR RELEASE: 03/20/2001 CIA-RDP86-00513R000101520005-7

ANDREYEV, N. S., Cand Phys-Math Sci -- "Chemically heterogeneous structure of certain complex glasses." /Len/, 1961. (State Order of Lenin Opt Inst im S. I. Vavilov) (KL, 8-61, 225)

APPROVED FOR RELEASE: 03/20/2001 CIA-RDP86-00513R000101520005-7"

"APPROVED FOR RELEASE: 03/20/2001 CIA-RDP86-00513R000101520005-7

Andreyev, N. S.

AUTHOR: Syritskaya, Z. N. S/072/60/000/03/021/023
B003/B008

TITLE: 3rd All-Union Conference on the Vitreous State

PERIODICAL: Steklo i keramika, 1960, Nr 3, pp 43-46 (USSR)

ABSTRACT: The 3rd All-Union Conference on the Vitreous State was held in Leningrad at the end of 1959. It was organized by the Institut khimii silikatov AN SSSR (Institute of the Chemistry of Silicates, AS USSR), Vsesoyuznoye khimicheskoye obshchestvo imeni D. I. Mendeleyeva (All-Union Chemical Society imeni D. I. Mendeleyev) and Gosudarstvennyy opticheskiy institut imeni S. I. Vavilova (State Optical Institute imeni S. I. Vavilov). More than 100 reports on the structure of glass, investigation methods of the vitreous state, the mechanism of vitrification and physico-chemical and technical properties of glasses were delivered. The conference was opened by Academician A. A. Lebedev. Fundamental investigation methods and results concerning the glass structure were discussed at the 1st meeting. Academician A. A. Lebedev reported on possibilities and results of optical methods, Ye. A. Poray-Koshits on the diffraction method, K. S. Yevstrop'yev on general problems concerning structure and properties of glasses. The 2nd meeting produced 5 reports on the problem of the vitreous state: Z. L. [illegible], "Chemical Peculiarities of Polymeric Vitreous Materials and the Nature of Vitrification"; N. A. Goryunova and B. T. Kolomiyets, "On the Problems of Conformities of the Vitrification"; [illegible], "Glass as a Polymer"; A. N. Danyel'yan, "Theory of Glass Structure"; A. G. Vlasov, "Natural Oscillations of the Glass Lattice". The 3rd meeting produced 9 reports on investigation results of silicate melts and on problems of the mechanism of vitrification: A. V. Avgustinik, "On the Problem of the Formation of the Crystalline Phase From the Silicate Melt"; O. K. Botvinkin, "Process of Vitrification and the Structure of Glass"; B. N. Lazarevskiy, O. A. Yesin and V. I. Kuzikin, "On the Structure of Melts"; I. T. Gryzlov and O. A. Yesin, "Thermodynamic Properties of the Silicate Systems FeO - CaO - SiO_2 and CaO - Al_2O_3 - SiO_2"; G. M. Bartenev, "Mechanical and Structural Vitrification"; N. V. Veltkamp-Tiesen, "Mechanism of Vitrification". At the 4th meeting, 13 reports dealt with problems of the glass structure and optical investigation methods: V. A. Klyrinskaya, "Infrared Reflection Spectra of Sodium Silicate Glasses and Their Relations to the Structure"; Ya. S. Bobovich and T. F. [illegible], "Smekal-Raman Dispersion of Light and the Structure of Some Silicate Glasses"; V. A. Kolesova, "Investigation of the Vibrational Spectra of Aluminosilicate Glasses"; N. P. Sobolev reported on the work of the Fizicheskiy Institut AN SSSR (Institute of Physics AS USSR) with

Card 1/8

Card 2/8

glasses from one component, with the help of infrared spectrophotometry and the Smekal-Raman dispersion; T. A. Sidorov reported on the molecular structure and the properties of the crystalline quartz; S. N. Brekhovskikh and V. P. Cheremisinov reported on structural investigations of lead- and bismuthtorate glasses with the aid of infrared spectroscopy; A. G. Vlasov, "The Quantitative Relation of the Orderly and Irregular Phase in Glass"; G. O. [illegible] and A. G. Alekseyev, "Electronographic Investigation of the Structure of Glasses"; N. A. Voyshvillo, "On the Structure of a Sodium-boron-silicate Glass Subjected to Enduring Thermal Treatment"; Z. S. Andreyev, V. I. Aver'yanov, N. A. Voyshvillo, "Structural Interpretation of the Anomal Dispersion of the Visible Light in Sodium-boron-silicate Glasses". At the 5th meeting, 9 reports dealt with the investigation results of sodium-boron-silicate glasses. A. A. Appen and Can' Fu-Si, "Boron and Alumoboron Anomaly of the Properties of Silicate Glasses"; Ye. I. Galant, "On the Coordination Numbers of Aluminum and Boron in Some Glasses"; S. P. Zhdanov reported on structural changes in boron-silicate glasses; Ye. A. Poray-Koshits and S. P. Zhdanov reported on some controversial problems concerning the structure of boron-silicate glasses and their porous products; Ye. A. Poray-Koshits and Z. S. Andreyev, "Submicroscopic Inhomogeneities in the Structure of Complex Glasses". The 15 reports at

Card 3/8

(43)

APPROVED FOR RELEASE: 03/20/2001 CIA-RDP86-00513R000101520005-7"

"APPROVED FOR RELEASE: 03/20/2001 CIA-RDP86-00513R000101520005-7

AUTHORS: Andreyev, N. S., Poray-Koshits, Ye. A. 20-118-4-30/61

TITLE: The Chemically Inhomogeneous Structure of Sodium-borosilicate Glass (Khimicheski neodnorodnoye stroyeniye natriyevoborosilikatnykh stekol)

PERIODICAL: Doklady Akademii Nauk SSSR, 1958, Vol. 118, Nr 4, pp. 735-737 (USSR)

ABSTRACT: First the previous works dealing with the same subject are referred to. The determination for chemically inhomogeneous structure of glass by any direct structural method is of fundamental interest. For this purpose the method of the scattering of X-rays through small angles was used and a new vacuum chamber was produced which was based upon the principle of the "frame-chamber", suggested by Kratky (reference 17). By means of this chamber a clear and reproducible scattering through small angles at a glass of the following composition could be obtained (in molecular per cent): Na_2O 7, Ba_2O_3 23, and SiO_2 70. This glass was not subjected to any chemical influence. Because of the insignificant difference between the electron densities

Card 1/4

APPROVED FOR RELEASE: 03/20/2001 CIA-RDP86-00513R000101520005-7"

"APPROVED FOR RELEASE: 03/20/2001 CIA-RDP86-00513R000101520005-7

of the inhomogeneity domains the intensity of scattering through small angles by non-leaded glass is very low and the experiments to record such a weak scattering on an X-ray film were unsuccessful. This scattering did not depend on the composition and on the heat treatment of the glass, but it depended much on the degree of the dispersity of the powder. A noticeable scattering into the domain very near to the original beam was observed, e.g. at grains with 0,1 mm diameter by a 2 hour exposure. The here examined glass samples had the shape of 0,2 mm thick plates. The X-ray exposure was made by filtered copper radiation. The scattering through small angles was examined in 9 glass samples, which had been subjected to various heat treatments. As base of the experiments sample Nr 1, was used which was annealed at ~500°C. The other test pieces were heated for different periods up to 600°C and 650°C and were tempered in air. The duration of exposure which depends on the dimensions of the inhomogeneity domains varied between 15 and 100 hours. At the same time the authors also examined porous glass which was obtained from the same samples by

APPROVED FOR RELEASE: 03/20/2001 CIA-RDP86-00513R000101520005-7"

"APPROVED FOR RELEASE: 03/20/2001 CIA-RDP86-00513R000101520005-7

1 ASF 1 19 PHYSICS SOV/5133

Vsesoyuznoye soveshchaniye po stekloobraznomu sostoyaniyu. M, Leningrad, 1959.

Stekloobraznoye sostoyaniye; trudy Tretyego vsesoyuznogo soveshchaniya Leningrad, 16-19 noyabrya 1959 (Vitreous State; Transactions of the Third All-Union Conference on the Vitreous State, Held in Leningrad November 16-19, 1959) Moskva, Izd-vo AN SSSR, 1960. 534 p. Errata slip inserted. 3,000 copies printed. (Series: Its: Trudy)

Sponsoring Agencies: Institut khimii silikatov Akademii nauk SSSR. Vsesoyuznoye khimicheskoye obshchestvo imeni D.I. Mendeleyeva and Gosudarstvennyy opticheskiy institut imeni S.I. Vavilova.

Editorial Board: A.I. Avgustinik, V.P. Barzakovskiy, M.A. Borisova, O.K. Botvinkin, V.V.Vargin, A.G. Vlasov, K.S. Yevstropyev, A.A. Lebedev, M.A. Matveyev, V.S. Molchanov, R.L. Myuller, Ye.A. Porai-Koshits, Chairman, N.A. Toropov, V.A. Florinskaya, A.K. Yakhkind; Ed. of Publishing House: I.V. Suvorov; Tech. Ed.: V.T. Bochever.

PURPOSE: This book is intended for researchers in the science and technology of glasses.

COVERAGE: The book contains the reports and discussions of the Third All-Union Conference on the Vitreous State, held in Leningrad on November 16-19, 1959. They deal with the methods and results of studying the structure of glasses, the relation between the structure and properties of glasses, the nature of the chemical bond and glass structure, and the crystallochemistry of glass. Fused silica, mechanism of vitrification, optical properties and glass structure, and the electrical properties of glasses are also discussed. A number of the reports deal with the dependence of glass properties on composition, the tinting of glasses and radiation effects, and mechanical, technical, and chemical properties of glasses. Other papers treat glass semiconductors and soda borosilicate glasses. The Conference was attended by more than 300 delegates from Soviet and East German scientific organizations. Among the participants in the discussions were N.V. Solonin, Ye. V. Kuvshinskiy, Yu.A. Gostev, V.P. Pryanishnikov, Yu. Ya. Gotlib, O.P. Mchedlov-Petrosyan, G.F. Mikhaylov, S.M. Petrov, A.V. Lazarev, D.I. Levin, A.V. Shatilov, N.T. Fleshchinskiy, A.Ya. Kuznetsov, E.V. Degtyareva, G.V. Byurganovskaya, A.A. Kalenov, M.N. Skornyakov, P.Ya. Lokin, E.K. Keller, Ya.A. Kuznetsov, V.P. Pondaev, R.S. Shevelevich, Z.G. Pinsker, and O.S. Molchanova. The final session of the Conference was addressed by Professor I.I. Kitaygorodskiy, Honored Scientist and Engineer, Doctor of Technical Sciences. The following institutes were cited for their contribution to the development of glass science and technology: Gosudarstvennyy opticheskiy institut (State Optical Institute), Institut khimii silikatov AN SSSR (Institute of Silicate Chemistry, AS USSR), Fizicheskiy institut AN SSSR (Physics Institute AS USSR), Fiziko-tekhnicheskiy institut AN SSSR (Physicotechnical Institute AS USSR), Institut fiziki AN BSSR, Minsk (Institute of Physics, Academy of Sciences, Belorusskaya SSR, Minsk), Laboratory of Physical Chemistry of Silicates of the Institut obshchey i neorganicheskoy khimii AN BSSR, Minsk (Institute of General and Inorganic Chemistry, Academy of Sciences, Belorusskaya SSR, Minsk), Institut vysokomolekulyarnykh soyedineniy AN SSSR (Institute of High Molecular Compounds, AS USSR), Gosudarstvennyy institut stekla (State Institute for Glass), Gosudarstvennyy institut steklovolokna (State Institute for Glass Fibers), Gosudarstvennyy institut elektrotekhnicheskogo stekla (State Institute for Electrical Glass), Sibirskiy fiziko-tekhnicheskiy institut, Tomsk (Siberian Physicotechnical Institute, Tomsk), Leningradskiy gosudarstvennyy universitet (Leningrad State University), Moskovskiy khimiko-tekhnologicheskiy institut (Moscow Institute of Chemical Technology), Leningradskiy tekhnologicheskiy institut im. Lensoveta (Leningrad Technological Institute imeni Lensoviet), Belorusskiy politekhnicheskiy institut Minsk (Belorussian Polytechnic Institute, Minsk), Novocherkasskiy politekhnicheskiy institut (Novocherkassk Polytechnic Institute), and Sverdlovskiy politekhnicheskiy institut (Sverdlovsk Polytechnic Institute). The Conference was sponsored by the Institute of Silicate Chemistry AS USSR (Acting Director - A.S. Gotlib), the Vsesoyuznoye khimicheskoye obshchestvo im. D.I. Mendeleyeva (All-Union Chemical Society imeni D.I. Mendeleyev), and the Gosudarstvennyy orden Lenina opticheskiy institut imeni S.I. Vavilova (State "Order of Lenin" Optical Institute imeni S.I. Vavilov). The 15 resolutions of the Conference include recommendations to organize a Center for the purpose of coordinating the research on glass, to publish a new periodical under the title "Fizika i khimiya stekla" (Physics and Chemistry of Glass), and to join the International Committee on Glass. The Conference thanks A.A. Lebedev, Academician, Professor, and Chairman of the Organization of Committee; Ye.A. Porai-Koshits, Doctor of Physics and Mathematics, Member of the Organizational Committee; and R.L. Myuller, Doctor of Chemical Sciences, Member of the Organizational Committee. The editorial board thanks G.M. Partenov, M.V. Vol'kenshteyn, L.I. Demkina, D.P. Dobychin, S.K. Dutrovo, V.A. Ioffe, and B.T. Kolomiyets. References accompany individual reports.

APPROVED FOR RELEASE: 03/20/2001 CIA-RDP86-00513R000101520005-7"

"APPROVED FOR RELEASE: 03/20/2001 CIA-RDP86-00513R000101520005-7

Vitreous State (Cont.) SOV/5035

Bartenev, G.M. [illegible] Vitrification 147

Discussion 153

Optical Properties and Structure of Glasses

Florinskaya, V.A., and R.M. [illegible]. Study of Glass Crystallization Products of the Na_2O-SiO_2 System by the Infrared Spectroscopic Method 157

Florinskaya, V.A. Infrared Reflection Spectra of Soda-Silicate Glasses and Their Relation to Structure 177

Alekseyev, A.G. Study of Glass Crystallization Products of the Na_2O-SiO_2 System by the X-Ray Diffraction Method 194

Bobovich, Ya.S., and T.P. Tulub. Combination Scattering of Light [Raman Spectra] and Structure of Some Silica Glasses 198

Kolesova, V.A. Study of the Structure of Alkali Aluminosilicate Glasses by Their Infrared Absorption Spectra 203

Card 9/22

Vitreous State (Cont.) SOV/5035

Markin, Ye.P., V.V. Obukhov-Denisov, T.A. Sidorov, N.N. Sobolev, and V.P. Cherenisinov. Vibration Spectra and Structure of Glass-Forming Oxides in Crystalline and Vitreous States 207

Sidorov, T.A. Molecular Structure and Properties of Crystalline Quartz 213

Prekhovskikh, S.M., and V.P. Cherenisinov. Study of the Structure of Lead Borate and Bismuth Borate Glasses With the Aid of Infrared Spectroscopy 219

Vlasov, A.G. Quantitative Correlation of the Ordered and Disordered Phases in Glass 222

Bagdyk'yants, G.D., and A.G. Alekseyev. Electron Diffraction Study of Vitreous Silica and Lead Silicate Glasses 226

Kolyadin, A.I. Anomalous Scattering of Light in Glass 230

Vitreous State (Cont.) SOV/5035

Andreyev, N.S., V.I. [illegible], and N.A. [illegible]. On the Role of Intermolecular Interference in [illegible] Optical Phenomena in Soda Borosilicate Glasses 234

Discussion 238

Electrical Properties of Glasses

Myuller, R.L. [Doctor of Chemical Science]. Mobility of Cations and the Degree of Dissociation of Polar Groups As a Function of the Ion-Atom Composition of Glass 245

Prenov, V.A., V.I. Gosta, and L.M. Kravil'nikova. Electrical Conductivity of Glasses in High Strength Electric Fields and Problems of Glass Structure 251

Belyavskaya, L.M. Study of Electrical Conductivity of Glasses by the Method of Nonuniform Electric Field 254

Card 11/[illegible]

APPROVED FOR RELEASE: 03/20/2001 CIA-RDP86-00513R000101520005-7"

"APPROVED FOR RELEASE: 03/20/2001 CIA-RDP86-00513R000101520005-7

Vitreous State (Cont.) SOV/5035

Appen, A.A., and Kan Fu-hsi. Boric and Aluminoboric Anomalies of Silica Glass Properties 493

Galant, Ye. I. Refractive Index and Coordination Transformations of Alumino-Borosilicate Glasses 499

Zhdanov, S.P. On the Structural Transformations in Glasses Containing B_2O_3 502

Pafomova, L.A. Thermochemical Study of Soda Borosilicate Glasses 507

Voyshvillo, N.A. On the Structure of Soda Borosilicate Glass Subjected to Long Heat Treatment 511

Kohkonov, Kh.B. Effect of Heat Treatment on the Low-Temperature Thermal Capacity of Soda Borosilicate Glass 514

Poray-Koshits, Ye.A. [Doctor of Physics and Mathematics], S.P. Zhdanov, and N.S. Andreyev. On Some of the Debatable Problems Relating to the Structure and Anomalous Properties of Soda Borosilicate Glasses 517

Card 21/22

Vitreous State (Cont.) SOV/5035

Discussion 522

Final Session of the Conference

On the State and on the Further Tasks Connected With the Solution of Glass Structure Problems (Resolution of the Third All-Union Conference Held During November 16-21, 1959) 523

AVAILABLE: Library of Congress

JA/dwm/wmp
6-29-61

Card 22/22

APPROVED FOR RELEASE: 03/20/2001 CIA-RDP86-00513R000101520005-7"

"APPROVED FOR RELEASE: 03/20/2001 CIA-RDP86-00513R000101520005-7

ANDREYEV, N. S.; AVERYANOV, V. I.; PORAY-KOSHITS, Ye. A.

"The critical phenomena in sodium silicate glasses."

report submitted for Intl Conf on Physics of Non-Crystalline Solids, Delft, Netherlands, 6-10 Jul 64.

Grebenshchikov Inst for Silicate Chemistry, AS, Leningrad.

APPROVED FOR RELEASE: 03/20/2001 CIA-RDP86-00513R000101520005-7"

"APPROVED FOR RELEASE: 03/20/2001 CIA-RDP86-00513R000101520005-7

ANDREYEV, N. S.; AVERYANOV, V. I.

"Structural investigations of sodium silicate glasses in the region of metastable liquation."

report submitted for 4th All-Union Conf on Structure of Glass, Leningrad, 16-21 Mar 64.

APPROVED FOR RELEASE: 03/20/2001 CIA-RDP86-00513R000101520005-7"

"APPROVED FOR RELEASE: 03/20/2001 CIA-RDP86-00513R000101520005-7

ANDREYEV, N.S.; AVER'YANOV, V.I.; VOYSHVILLO, N.A.

Structural interpretation of anomalous diffusion of visible light in sodium borosilicate glasses. Fiz. tver. tela 2 no.5:1011-1021 My '60. (MIRA 13:10)

1. Institut khimii silikatov AN SSSR, i Gosudarstvennyy opticheskiy intitut im. S.I. Vavilova.
(Glass--Optical properties)

APPROVED FOR RELEASE: 03/20/2001 CIA-RDP86-00513R000101520005-7"

"APPROVED FOR RELEASE: 03/20/2001 CIA-RDP86-00513R000101520005-7

Dmitriyev N. S.

AUTHOR: Syritskaya, Z. N. S/072/60/000/03/021/023
B003/B008

TITLE: 3rd All-Union Conference on the Vitreous State

PERIODICAL: Steklo i keramika, 1960, Nr 3, pp 43-46 (USSR)

ABSTRACT: The 3rd All-Union Conference on the Vitreous State was held in Leningrad at the end of 1959. It was organized by the Institut khimii silikatov AN SSSR (Institute of the Chemistry of Silicates AS USSR), Vsesoyuznoye khimicheskoye obshchestvo imeni D. I. Mendeleyeva (All-Union Chemical Society imeni D. I. Mendeleyev) and Gosudarstvennyy opticheskiy institut imeni S. I. Vavilova (State Optical Institute imeni S. I. Vavilov). More than 100 reports on the structure of glass, investigation methods of the vitreous state, the mechanism of vitrification and physicochemical and technical properties of glasses were delivered. The Conference was opened by Academician A. A. Lebedev. [illegible] At the 5th meeting, 9 reports dealt with the investigation results of sodium-boron-silicate glasses. A. A. Appen and Gan' Fu-Si, "Boron and Aluminoboron Anomaly of the Properties of Silicate Glasses"; Ye. I. Galant, "On the Coordination Numbers of Aluminum and Boron in Some Glasses"; S. P. Zhdanov reported on structural changes in boron-silicate glasses; Ye. A. [illegible] and S. P. Zhdanov reported on some controversial problems on the structure of boron-silicate glasses and their porous properties; Ye. A. Poray-Koshits and N. S. Andreyev, "Submicroscopic Inhomogeneities in the Structure of Silicate Glasses". The 15 reports at

Card 3/8

the 6th meeting dealt with the electric properties of glasses. L. M. Belyavskaya reported on the structure determination of [illegible] with the aid of an inhomogeneous electric field; N. M. Ter[illegible] and V. I. Odelevskiy, "Structure and Properties of Some Silicate Glasses in the Light of the Polymer-theory of the Vitreous State"; N. L. Nyuller reported on the agility and the degree of dissociation as functions of the ionic and atomar composition of the glass; V. I. Odelevskiy reported on the nature of dielectric losses in glasslike and crystalline aluminosilicates; V. P. Petrovskiy, "Investigation of the Dielectric Polarization and the Losses in Phosphate Glasses"; V. A. Prezenov, V. I. Gizen and L. N. Kostilitsyna reported on investigations of the conductivity of glasses in electric high-tension fields, K. K. Kyzirop'yev on the diffusion of Na^{22} and K^{42} in some silicate glasses, V. A. Ioffe, L. S. [illegible]-skaya and G. I. Khvostenko on electric properties of crystalline and glasslike aluminosilicates. O. V. Mazurin spoke on his [illegible] which were carried out under the supervision of Professor M. I. Yevstrop'yev at the Kafedra stekla LTI imeni Lensoveta (Chair for Glass of the Leningrad Technological Institute imeni Lensoveta) in the report: "The Dependence of the Electroconductivity of Glasses on the Chemical Composition". V. A. Khan'yanov, O. V. Mazurin and N. N. Zubkova gave investigation results on the specific electroconductivity of glasses of the system $SiO_2 - B_2O_3 - BaO$ in the temperature range of from 400-1300° and on the influence of additions of aluminum- and zinc oxide on the electric conductivity of these glasses. At the 7th meeting, 6 reports dealt with glasses as semiconductors, 9 with the coloring of glasses and the influence of radiation and 4 reports with technical properties of glasses. V. A. Ioffe and G. I. Khvostenko, "Electric Properties of Some Semiconductor Glasses". E. V. Kolomiyets, N. A. Goryunova and V. P. Shilo reported on methods for the production of chalcogenide glasses, on some of their general properties and on the limits of the vitreous state in the systems $Tl_2Se - As_2Se_3$, $Tl_2Se - Sb_2Se_3$, $Sb_2Se_3 - As_2Se_3$, Tl - As - Se. B. T. Kolomiyets and B. V. Pavlov reported on the optical absorption in a number of binary chalcogenide systems. B. T. Kolomiyets, T. N. Kumantova and G. F. Kazarova reported on the electron conductivity of chalcogenide glasses. K. A. Varpolin, Ye. A. Poray-Koshits, "Radiographic Investigation of the Structure of Vitreous Arsenic Chalcogenides". I. V. Tarasov and V. A. Bonnyavskiy reported on the chain structure of the vitreous arsenious sulphide determined by them with calorimetric measurements. K. P. Azarov reported on structure and properties of ferrous boron glasses and

Card 4/8

Card 5/8

(31)

APPROVED FOR RELEASE: 03/20/2001 CIA-RDP86-00513R000101520005-7"

"APPROVED FOR RELEASE: 03/20/2001 CIA-RDP86-00513R000101520005-7

S/058/61/000/007/034/086
A001/A101

AUTHORS: Andreyev, N.S., Aver'yanov, V.I., Voyshvillo, N.A.

TITLE: On the role of interparticle interference in anomalous optical phenomena in sodium-boron-silicate glasses

PERIODICAL: Referativnyy zhurnal. Fizika, no. 7, 1961, 163, abstract 7G17 (V sb. "Stekloobrazn. sostoyaniye". Moscow-Leningrad, AN SSSR, 1960, 234 - 238, Discus., 238 - 242)

TEXT: With the aim of explaining anomalous scattering in sodium-boron-silicate glasses (abstract 7G16), the scattering of optical light at large angles is compared with scattering of X-rays at small angles taken into consideration the data on the structure of glasses investigated. The course of curves of scattering intensity, qualitatively the same for optical light and X-rays, leads to a conclusion that the cause of anomalous scattering is interference of rays scattered from different particles which are packed sufficiently densely with some order in their arrangement. A simple model of particle arrangement is adopted for qualitative description, which is characterized by the most prob-

Card 1/2

APPROVED FOR RELEASE: 03/20/2001 CIA-RDP86-00513R000101520005-7"

"APPROVED FOR RELEASE: 03/20/2001 CIA-RDP86-00513R000101520005-7

ACCESSION NR: AT4019284 S/0000/63/003/001/0046/0053

AUTHOR: Andreyev, N. S.; Goganov, D. A.; Poray-Koshits, Ye. A.; Sokolov, Yu. G.

TITLE: The chemically heterogeneous structure of binary sodium and lithium silicate glass

SOURCE: Simpozium po stekloobraznomu sostoyaniyu. Leningrad, 1962. Stekloobraznoye sostoyaniye, vy*p. 1: Katalizirovannaya kristallizatsiya stekla (Vitreous state, no. 1: Catalyzing crystallization of glass). Trudy* simpoziuma, v. 3, no. 1. Moscow, Izd-vo AN SSSR, 1963, 46-53

TOPIC TAGS: crystal heterogeneity, x-ray diffraction, lithium glass, glass silicate, submicroscopic structure, binary system, glass structure

ABSTRACT: The binary systems Na_2O-SiO_2 and Li_2O-SiO_2 were investigated by roentgenographic techniques. In order to improve the characterization of the submicroscopic structure of glass, in addition to the size of the heterogeneous regions, the mean square difference in their electron densities was determined as a measure of the degree of heterogeneity. The mathematical approach to this is described. The composition conditions of thermal treatment and preparation of the test samples are given. Sodium silicate glass containing 11.5-18.5% mol.% Na_2O was used. A characteristic feature of all test samples was their ability to become opalescent after thermal treatment. When the relationship between cloudiness

Card 1/2

APPROVED FOR RELEASE: 03/20/2001 CIA-RDP86-00513R000101520005-7"

"APPROVED FOR RELEASE: 03/20/2001 CIA-RDP86-00513R000101520005-7

ACCESSION NR: AT4019284

and temperature was plotted, the temperature at which opalescence disappeared (785 C for a glass containing 14 mol. % Na_2O) was found to be inversely proportional to the Na and Li content. The intensity of small-angle x-ray scattering is an accurate indication of the heterogeneity of sodium and lithium silicate glass. The way in which this scattering varies with the composition and thermal treatment was investigated, and the critical temperature beyond which the heterogeneity increased with increasing temperature was determined. Whereas the mean square difference of the electron densities decreases regularly with the Li_2O content, in the case of sodium it first increases, reaching a maximum at about 11.5 mol. % Na_2O. "The authors thank Ye. V. Podushko for fusing the glass containing 5-10 mol. % Na_2O in a high-frequency electric furnace." Orig. art. has: 6 figures, 1 table and 6 formulas.

ASSOCIATION: none

SUBMITTED: 17May63 DATE ACQ: 21Nov63 ENCL: 00

SUB CODE: MT NO REF SOV: 013 OTHER: 006

Card 2/2

APPROVED FOR RELEASE: 03/20/2001 CIA-RDP86-00513R000101520005-7"

"APPROVED FOR RELEASE: 03/20/2001 CIA-RDP86-00513R000101520005-7

24(7) SOV/51-7-1-20/27

AUTHORS: Rezayev, N.I. and Andreyev, N.S.

TITLE: Investigation of the Temperature Dependence of the Intensity and Width of Raman Lines (Issledovaniye temperaturnoy zavisimosti intensivnosti i shiriny liniy kombinatsionnogo rasseyaniya)

PERIODICAL: Optika i spektroskopiya, 1959, Vol 7, Nr 1, pp 119-122 (USSR)

ABSTRACT: The Raman spectrum of liquid metaxylene was investigated between -30°C and +160°C using a photoelectric spectrometer. The intensities of all the Raman lines of metaxylene in the 279-1613 cm^{-1} region rose with temperature, contradicting the theory which predicts a fall with temperature. The same behaviour was observed earlier (Ref 11) in paraxylene. The greatest departures from theory were observed in lines due to deformational vibrations of the external ring angles and CH_3 groups (β-form vibrations), confirming earlier suggestions (Refs 6, 10, 20, 21) that the vibration form affects strongly the temperature and concentration dependences of the Raman line intensities. There was no correspondence between the temperature dependence of the metaxylene Raman line intensities and the effect of temperature on widths of the same lines. Widths of all the lines rose with temperature (figure on p 121)

Card 1/2

APPROVED FOR RELEASE: 03/20/2001 CIA-RDP86-00513R000101520005-7"

"APPROVED FOR RELEASE: 03/20/2001 CIA-RDP86-00513R000101520005-7

SOV/51-7-1-20/27

Investigation of the Temperature Dependence of the Intensity and Width of Raman Lines

and this rise depended on the degree of line depolarization: the greater the depolarization the steeper the rise of line width with temperature. Temperature broadening of the metaxylene Raman lines is primarily due to relaxation processes in liquids, but the effect of intermolecular interaction cannot be ruled out. Acknowledgment is made to P.A. Bazhulin for his help in carrying out this work. There are 1 figure, 1 table and 22 references, 18 of which are Soviet and 4 English.

SUBMITTED: December 24, 1953

Card 2/2

APPROVED FOR RELEASE: 03/20/2001 CIA-RDP86-00513R000101520005-7"

"APPROVED FOR RELEASE: 03/20/2001 CIA-RDP86-00513R000101520005-7

POPOV, Ye.M.; ANDREYEV, N.S.; KAGAN, G.I.

Vibrational spectra of vinyl ethers. Rotational isomerism.
Opt. i spektr. 12 no.1:37-41 Ja '62. (MIRA 15:2)
(Ethers—Spectra)
(Isomerism)

APPROVED FOR RELEASE: 03/20/2001 CIA-RDP86-00513R000101520005-7"

"APPROVED FOR RELEASE: 03/20/2001 CIA-RDP86-00513R000101520005-7

KOKURIN, A.D.; OBREZKOV, V.D.; ANDREYEV, N.S.

Preparation of vinyl acetate from diluted acetylene. Zhur. prikl. khim. 36 no.4:886-889 Ap '63. (MIRA 16:7)

(Vinyl acetate) (Acetylene)

APPROVED FOR RELEASE: 03/20/2001 CIA-RDP86-00513R000101520005-7"

"APPROVED FOR RELEASE: 03/20/2001 CIA-RDP86-00513R000101520005-7

PONOMARENKO, V.A.; ZUYEVA, G.Ya.; ANDREYEV, N.S.

Inductive effect and oscillatory frequencies of Ge - H and Ge - D bonds. Izv.AN SSSR.Otd.khim.nauk no.10:1758-1762 O '61. (MIRA 14:10)

1. Fizicheskiy institut im. P.N.Lebedeva AN SSSR.
(Germanium hydride) (Electrochemistry)

APPROVED FOR RELEASE: 03/20/2001 CIA-RDP86-00513R000101520005-7"

"APPROVED FOR RELEASE: 03/20/2001 CIA-RDP86-00513R000101520005-7

S/062/60/000/012/010/020
B013/B055

AUTHORS: Shuykin, N. I., Timofeyeva, Ye. A., Plotnikov, Yu. N., and Andreyev, N. S.

TITLE: Composition of the Products of Dehydration of C_6 - C_9 n-Alkanes Over Aluminum-chromium-potassium Catalyst

PERIODICAL: Izvestiya Akademii nauk SSSR. Otdeleniye khimicheskikh nauk, 1960, No. 12, pp. 2173-2177

TEXT: In the present paper the authors studied the structure of unsaturated and aromatic hydrocarbons, but above all the composition of alkenes formed from n-alkanes at 500°C over an aluminum-chromium-potassium catalyst and a volume velocity of 0.5 h^{-1}. n-hexane, n-heptane, n-octane and n-nonane were used for this reaction. The unsaturated hydrocarbons formed were found to consist mainly of alkenes. As regards number of carbon atoms, they correspond to the initial alkanes and have double bonds in the positions 2, 3 or 4. The catalyzate of n-hexane was found to contain 1-hexene also, but in much smaller amounts than 2- and 3-hexenes. The catalyzates of n-heptane, n-octane, and n-nonane possibly contain other alkenes in addition to the 2-heptene, 4-octene, and 4-nonene actually found. The quantities contained, however, are so small that they were not detectable in the Raman spectra.

Card 1/2

APPROVED FOR RELEASE: 03/20/2001 CIA-RDP86-00513R000101520005-7

"APPROVED FOR RELEASE: 03/20/2001 CIA-RDP86-00513R000101520005-7

FREYDLIN, L.Kh.; SHARF, V.Z.; ANDREYEV, N.S.

Stepwise dehydration of 1,6-hexanediol on a tricalcium phosphate catalyst. Izv. AN SSSR. Otd. khim. nauk. nauk no.2:373-375 F '61. (MIRA 14:2)

1. Institut organicheskoy khimii im.N.D.Zelinskogo AN SSSR.
(Hexanediol) (Calcium phosphate)

APPROVED FOR RELEASE: 03/20/2001 CIA-RDP86-00513R000101520005-7"

"APPROVED FOR RELEASE: 03/20/2001 CIA-RDP86-00513R000101520005-7

EYDUS, Ya.T.; YERSHOV, N.I.; YEROKHINA, V.R.; ANDREYEV, N.S.

Oxygen-initiated heterogeneous catalytic reaction of condensation of olefins in the presence of hydrogen. Part 2: Conversions of ethylene. Kin. i kat. 4 no.3:416-421 My-Je '63. (MIRA 16:7)

1. Institut organicheskoy khimii imeni Zelinskogo AN SSSR.
(Ethylene) (Polymerization)
(Oxygen)

APPROVED FOR RELEASE: 03/20/2001 CIA-RDP86-00513R000101520005-7"

"APPROVED FOR RELEASE: 03/20/2001 CIA-RDP86-00513R000101520005-7

YERSHOV, N.I.; EYDUS, Ya.T.; YEROKHINA, V.R.; ANDREYEV, N.S.

Oxygen-initiated heterogeneous catalytic reaction of condensation of olefins in the presence of hydrogen. Part 3: Conversions of propylene. Kin. i kat. 4 no.6:829-834 N-D '63. (MIRA 17:1)

1. Institut organicheskoy khimii imeni Zelinskogo AN SSSR.

APPROVED FOR RELEASE: 03/20/2001 CIA-RDP86-00513R000101520005-7"

"APPROVED FOR RELEASE: 03/20/2001 CIA-RDP86-00513R000101520005-7

EYDUS, Ya.T.; YERSHOV, N.I.; YEROKHINA, V.K.; ANDREYEV, N.S.

Oxygen-initiated heterogeneous catalytic condensation reaction of olefins in the presence of hydrogen. Part 4: 1-Butene conversions. Kin.i kat. 5 no.6:1063-1068 N-D '64. (MIRA 18:3)

1. Institut organicheskoy khimii imeni Zelinskogo AN SSSR.

APPROVED FOR RELEASE: 03/20/2001 CIA-RDP86-00513R000101520005-7"

"APPROVED FOR RELEASE: 03/20/2001 CIA-RDP86-00513R000101520005-7

YERSHOV, N.I.; EYDUS, Ya.T.; YEROKHINA, V.R.; ANDREYEV, N.S.

Oxygen-initiated heterogeneous catalytic reaction of condensation of olefins in the presence of hydrogen. Part 5: Conversion of isobutylene. Kin. i kat. 6 no.2:300-305 Mr-Ap '65. (MIRA 18:7)

1. Institut organicheskoy khimii imeni Zelinskogo AN SSSR.

APPROVED FOR RELEASE: 03/20/2001 CIA-RDP86-00513R000101520005-7"

"APPROVED FOR RELEASE: 03/20/2001 CIA-RDP86-00513R000101520005-7

ANDREYEV, N.S.; ANDREYEVA, K.S.

Seismic prospecting for bauxite deposits. Trudy VITR no.1:309-322 '58. (MIRA 12:1)
(Prospecting--Geophysical methods) (Seismic waves)

APPROVED FOR RELEASE: 03/20/2001 CIA-RDP86-00513R000101520005-7"

"APPROVED FOR RELEASE: 03/20/2001 CIA-RDP86-00513R000101520005-7

USSR / Forestry. Forest Cultures K-5

Abs Jour: Ref Zhur-Biol., No 10, 1958, 43959

Author : ~~Andreyev, N. S.~~

Inst : Bashkir Agricultural Institute

Title : On the Question of Geographical Sowings of the Common Pine

Orig Pub: Tr. Bashkirsk s.-kh. in-ta, 1956, 7, 295-300

Abstract: Experimental pine cultures were started at the Dmitriev School of Forestry with the seeds from the Bashkir ASSR, from the Baranovichskaya, Leningradskaya, Gorkuskaya, Ulyanovskaya, Chkalovskaya and other oblasts as well as from the Krasnoyarskiy and Altayskiy krays. The differences in the

Card 1/2

APPROVED FOR RELEASE: 03/20/2001 CIA-RDP86-00513R000101520005-7"

"APPROVED FOR RELEASE: 03/20/2001 CIA-RDP86-00513R000101520005-7

ANDREYEV, N. V.

AVDUSIN, D.A.; BELOGORTSEV, I.D.; BUDAYEV, D.I.; MINKIN, A.Ye.; RYABKOV, G.T.; KHENKIN, A.M., IVANOV, I.P.; KROLIK, I.D.; ANDREYEV, N.V.; VALIKOVA, K., red.; FILIPPENKOVA, M., tekhn.red.

[Smolensk; a guidebook] Smolensk; spravochnik-putevoditel'. [Smolensk] Smolenskoe knizhnoe izd-vo, 1957. 217 p. (MIRA 11:1)
(Smolensk--Description)

APPROVED FOR RELEASE: 03/20/2001 CIA-RDP86-00513R000101520005-7"

"APPROVED FOR RELEASE: 03/20/2001 CIA-RDP86-00513R000101520005-7

ANDREYEV, Nikolay Vladimirovich, dots., kand. tekhn. nauk,; BERLIN, Vasiliy Ivanovich, dots., kand. tekhn. nauk,; MCHEDLOV-PETROSYAN, Otar Petrovich, prof., doktor tekhn. nauk,; SHUBNIKOV, Aleksey Kuzmich, prof., doktor tekhn. nauk, red.; PESKOVA, L.N., red.; VERINA, G.P., tekhn. red.

[Textbook on materials for railroad transportation workers] Materialovedenie na zheleznodorozhnom transporte. Pod obshchei red. A.K.Shubnikova. Moskva, Gos. transp. zhel-dor. izd-vo, 1958. 461 p. (MIRA 11:10)

(Railroad engineering)
(Materials)

APPROVED FOR RELEASE: 03/20/2001 CIA-RDP86-00513R000101520005-7"

"APPROVED FOR RELEASE: 03/20/2001 CIA-RDP86-00513R000101520005-7

ANDREYEV, N.V

AUTHORS: Kovalev, V.P., Andreyev, N.V., Nikolayev, M.N., Guseynov, A.G., 56-4-49/54

TITLE: A Comparison of the Fission Neutron Spectra of U^{233},U^{235},Pu^{239}. (Sravneniye spektrov neytronov deleniya U^{233},U^{235},Pu^{239}) (Letter to the Editor)

PERIODICAL: Zhurnal Eksperim. i Teoret.Fiziki, 1957,Vol. 33, Nr 4, pp 1069--1071 (USSR)

ABSTRACT: The fission neutron spectra of U^{230},U^{235},Pu^{239} were compared with each other by means of different neutron detectors. The targets from U^{233},U^{235},Pu^{239} were brought to fission in the thermal column of a reactor. The obtained results show that the fission neutron spectrum of U^{233} and Pu^{239} is harder than that of U^{235}. The rise of temperature for U^{233}, and Pu^{239} respectively as compared to U^{235} amounts to 0,04 ± 0,01 MeV and 0.05 ± 0,01 MeV. The temperatures of the fission fragments of U^{233} and Pu^{239} were determined with 1,02 ± 0,01 and 1,06 ± 0,01 MeV, in which connection 1,00 MeV was assumed for the temperature of the fission fragments of U^{235} The rise of the mean neutron energy of the spontaneous fission Cf^{252} in proportion to the fission neutrons of U^{235} is 9-11%. There are 1 table and 2 Slavic references.

ASSOCIATION: None Given.
SUBMITTED: July 19, 1957
AVAILABLE: Library of Congress.

Card 1/1

APPROVED FOR RELEASE: 03/20/2001 CIA-RDP86-00513R000101520005-7"

"APPROVED FOR RELEASE: 03/20/2001 CIA-RDP86-00513R000101520005-7

PHASE I BOOK EXPLOITATION 868

Andreyev, N.V., Kalyuzhnyy, V.G., Konstantinov, A.S., Livshits, M.P., Manzhos, F.M., Savkov, Ye.I.; Uspasskiy, P.P., Feygina, A.Ya., Chebotarevskiy, V.V., Sheydeman, I.Yu.

Nemetallicheskiye materialy, ikh obrabotka i primeneniye (Nonmetallic Materials, Their Processing and Use) Moscow, Oborongiz, 1949. 535 p. 6,000 copies printed.

Ed. (title page): Kalyuzhnyy, V.G.; Ed. (inside book): Ponomareva, K.A.; Tech. Ed.: Zudakin, I.M.

PURPOSE: This book is intended for students of aviation institutes and other institutes and it may also be useful to engineering technicians dealing with nonmetal materials.

COVERAGE: The book consists of two parts and deals with various nonmetallic materials used in the aircraft industry. The first

Card 1/28

APPROVED FOR RELEASE: 03/20/2001 CIA-RDP86-00513R000101520005-7"

"APPROVED FOR RELEASE: 03/20/2001 CIA-RDP86-00513R000101520005-7

part discusses wooden materials and the second part presents basic information on plastics, adhesives, textiles, paper and rubber. The basic mechanical and chemical properties of nonmetallic materials, their engineering requirements and methods of processing them are presented. The book was written by personnel of the Moscow Aircraft Institute imeni Sergo Ordzhonikidze, the Moscow Aircraft Engineering Institute, the All-Union Scientific Research Institute for Aircraft Materials and other organizations. Chapters I, II, V, and VI were written by Ye. I. Savkov, chapter III by Candidate of Technical Sciences F.M. Manzhos, chapter IV by Candidate of Technical Sciences V.G. Kolyuzhnyy, chapters VII and VIII by Candidate of Technical Sciences A.Ya. Feygina, chapters IX and XI by Professor P.P. Uspasskiy, chapter X by Candidate of Technical Sciences N.V. Andreyev, chapter XII by Candidate of Technical Sciences I.Yu. Sheydeman, and N.V. Andreyev, chapter XIII by Candidate of Technical Sciences I.Yu. Sheydeman, and Engineer A.S. Konstantinov, chapter XIV by Candidate of Technical Sciences V.V. Chebotarevskiy, and I.V. Andreyev, chapter XV by Candidate of Technical Sciences

APPROVED FOR RELEASE: 03/20/2001 CIA-RDP86-00513R000101520005-7"

"APPROVED FOR RELEASE: 03/20/2001 CIA-RDP86-00513R000101520005-7

YER'OLIN, Nikolay Panteleymonovich; ANDREYEV, N.V., redaktor; VORONETSKAYA, L.V., tekhnicheskiy redaktor

[Computations for low-duty commutators] Rashchet malomoshchnykh kollektornykh mashin. Moskva, Gos.energ.izd-vo, 1955. 167 p.
(Commutations (Electricity)) (MLRA 8:11)

APPROVED FOR RELEASE: 03/20/2001 CIA-RDP86-00513R000101520005-7"

"APPROVED FOR RELEASE: 03/20/2001 CIA-RDP86-00513R000101520005-7

ANDREYEV, N.V., inzh.

Geographical works of officers of the General Headquarters between 1836 and 1868 and their importance in the development of the geography of Russia (general characteristics). Trudy MIIGAIK no.49:11-25 '62. (MIRA 16:6)

(Military geography)

APPROVED FOR RELEASE: 03/20/2001 CIA-RDP86-00513R000101520005-7"

"APPROVED FOR RELEASE: 03/20/2001 CIA-RDP86-00513R000101520005-7

STOYANCHENKO, [illegible]; [illegible], I.G.; [illegible], [illegible]; [illegible], [illegible].

Improving thermal conditions [illegible] converter smelting. Stal' 24 no.[illegible] My '64. [illegible]

1. Luganskiy zavod mashinostroyeniya im. Kerkhomenko i Luganskiy [illegible] Institute [illegible] Gorplana [illegible].

APPROVED FOR RELEASE: 03/20/2001 CIA-RDP86-00513R000101520005-7"

"APPROVED FOR RELEASE: 03/20/2001 CIA-RDP86-00513R000101520005-7

ANDREYEV, N.V.

History of the regionalization of Russia. Vest. Mosk. un. Ser. 5: Geog. 19 no.1:63-67 Ja-F '64. (MIRA 17:4)

APPROVED FOR RELEASE: 03/20/2001 CIA-RDP86-00513R000101520005-7"

"APPROVED FOR RELEASE: 03/20/2001 CIA-RDP86-00513R000101520005-7

L 10818-66 EWT(m)/EWP(t)/EWP(b)/EWA(h) JD

ACC NR: AP6000034 SOURCE CODE: UR/0115/65/000/010/0053/0054

AUTHOR: Andreyev, N.V.; Kovalev, A.S.; Salikov, L.R.

ORG: None

66
B

TITLE: A noncooled thermocouple for prolonged regulation of metal temperature

SOURCE: Izmeritel'naya tekhnika, no. 10, 1965, 53-54

TOPIC TAGS: automatic control system, thermocouple, molten metal, temperature measurement, THERMAL INSULATION, TEMPERATURE CONTROL

ABSTRACT: The article describes a noncooled thermocouple with a multilayer thermoinsulating casing, manufactured by the authors. This thermocouple makes it possible to regulate the temperature of a metal continuously from the instant of complete melting to tapping. The thermocouple was tested for durability on an IChM-1 industrial induction mixer of the Makeyevskiy Pipe Casting Plant (Makeyevskiy truboliteynyy zavod). This is the first time that prolonged measurements of the temperature of a metal were conducted by a noncooled thermocouple in industrial conditions. The average temperature was 1395C, with the thermocouple submerged in the melt for at least 50 — 90 min to a depth of 125 — 165 mm. A block diagram of the thermocouple is presented (Fig. 1). It is noted that, on the basis of continuous regulation of the metal temperature, it will prove possible to develop automatic systems to maintain rational operation of the aggregate. Orig. art. has: 1 figure.

Card 1/2 UDC: 536.532

APPROVED FOR RELEASE: 03/20/2001 CIA-RDP86-00513R000101520005-7"

"APPROVED FOR RELEASE: 03/20/2001 CIA-RDP86-00513R000101520005-7

L 10818-66

ACC NR: AP6000034

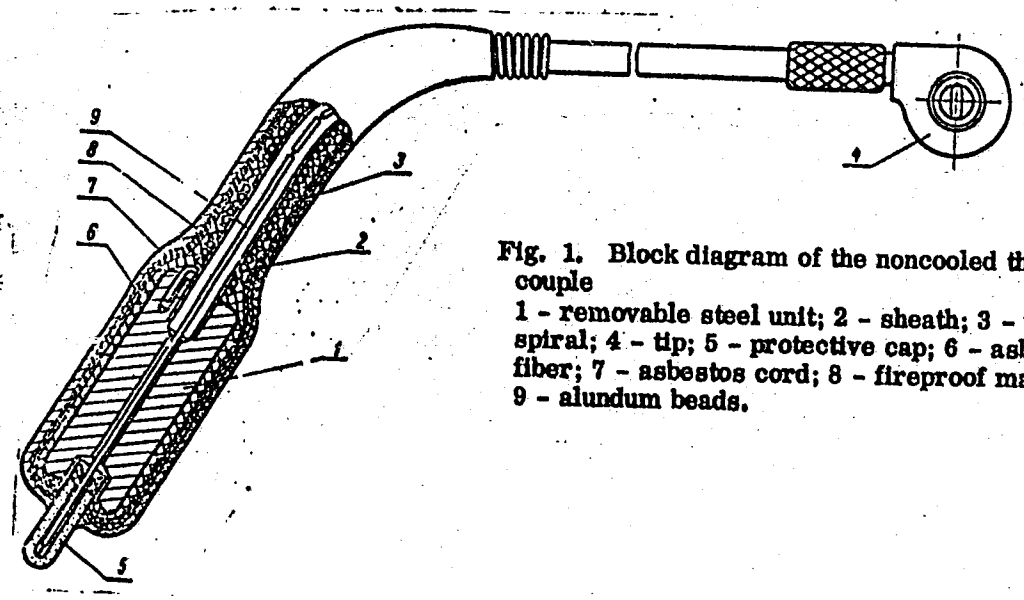

Fig. 1. Block diagram of the noncooled thermocouple
1 - removable steel unit; 2 - sheath; 3 - wire spiral; 4 - tip; 5 - protective cap; 6 - asbestos fiber; 7 - asbestos cord; 8 - fireproof material; 9 - alundum beads.

SUB CODE: 13,14 / SUBM DATE: none / ORIG REF: 005

Card 2/2

APPROVED FOR RELEASE: 03/20/2001 CIA-RDP86-00513R000101520005-7"

"APPROVED FOR RELEASE: 03/20/2001 CIA-RDP86-00513R000101520005-7

L 49001-65 EEC-2/EWA(k)/FBD/FSS-2/EWG(r)/EWT(1)/EWT(m)/EEC(k)-2/EWA(d)/EWC(c)/T/
EEC(b)-2/EWP(k)/EWA/EED-2/FCS(k)/EWA(m)-2/EWA(h)/EWA(c) Pf-4/Pl-4/Pl-4/Pm-4/Pm-4/
Po-4/Pab SOTB/IJP(c) WG

ACCESSION NR: AP5008099 UR/0017/65/000/002/0038/0039

AUTHOR: Andreyev, O. (Engineer, lieutenant colonel) 80 B

TITLE: Powerful hyperboloids

SOURCE: Voyennyye znaniya, no. 2, 1965, 38-39

TOPIC TAGS: death ray, 19 laser application, 15 laser weapon, maser

ABSTRACT: Many pre-World War II Soviet publications carried articles on the so-called "death rays." More often than not, these articles, based largely on non-Soviet data, were pure science fiction. The few serious articles referred to deadly weapons using heat rays.

The concept of weaponry changed drastically with the advent of lasers, which emit stimulated rather than thermal radiation. According to the article, the idea of using lasers for military purposes was first conceived in the United States, in 1961. Soviet lasers, it is stated, are being used only for the advancement of science and technology for peaceful purposes, although the writer adds, "Of course, almost any scientific achievement

Card 1/3

APPROVED FOR RELEASE: 03/20/2001 CIA-RDP86-00513R000101520005-7"

"APPROVED FOR RELEASE: 03/20/2001 CIA-RDP86-00513R000101520005-7

L 49001-65

ACCESSION NR: AP5008099

may be used for military purposes." Mention is made of the use of lasers in multichannel communication systems, ranging of planetary surfaces, metallurgy, plasma diagnostics, biology, medicine, etc.

In a review of Soviet contributions to the development of lasers, the following is mentioned: In 1940, V. A. Fabrikant predicted theoretically the possibility of stimulated emission. In 1951, Fabrikant with M. M. Vudynskiy and F. A. Butayeva laid down the theory of the amplification of light and radio waves by means of an active medium to achieve stimulated emission. A year later, on the strength of that theory, N. G. Basov and A. M. Prokhorov in the USSR and Charles Townes in the United States simultaneously proposed the principle of the generation and amplification of electromagnetic radiation. In 1957, Basov, Prokhorov, and Yu. M. Popov developed the construction principles of optical masers and amplifiers, and in 1960 the first Soviet ruby laser was in operation. In that year, Basov and Prokhorov won Lenin prizes and in 1964 they shared the Nobel Prize for physics with Townes. Orig. art. has 1 figure.

Card 2/3

APPROVED FOR RELEASE: 03/20/2001 CIA-RDP86-00513R000101520005-7"

"APPROVED FOR RELEASE: 03/20/2001 CIA-RDP86-00513R000101520005-7

L 49001-65

ACCESSION NR: AP5008099

ASSOCIATION: none

SUBMITTED: 00 ENCL: 00 SUB CODE: EC, WA

NO REF SOV: 000 OTHER: 000 ATD PRESS: 3238-F

Card 3/3

APPROVED FOR RELEASE: 03/20/2001 CIA-RDP86-00513R000101520005-7"

"APPROVED FOR RELEASE: 03/20/2001 CIA-RDP86-00513R000101520005-7

ANDREYEV, O., inzh.-mayor

Nuclear rocket flies at a low altitude. Av.i kosm. 46 no.7: 92-95 Jl '63. (MIRA 16:8)

(United States--Nuclear rockets)

APPROVED FOR RELEASE: 03/20/2001 CIA-RDP86-00513R000101520005-7"

"APPROVED FOR RELEASE: 03/20/2001 CIA-RDP86-00513R000101520005-7

ANDREYEV, O., inzh.

Instruments as advisers of agriculturists. Nauka i zhizn' 29 no.6:26-27 Je '62. (MIRA 15:10)

1. Gosudarstvennyy komitet Soveta Ministrov SSSR po avtomatizatsii i mashinostroyeniyu.
(Scientific apparatus and instruments)

APPROVED FOR RELEASE: 03/20/2001 CIA-RDP86-00513R000101520005-7"

"APPROVED FOR RELEASE: 03/20/2001 CIA-RDP86-00513R000101520005-7

ANDREYEV, O., inzh.-mayor

Flight following a ballistic trajectory. Voen. znan. 39 no.1: 24-25 Ja '63. (MIRA 16:1)

(Ballistic missiles)

APPROVED FOR RELEASE: 03/20/2001 CIA-RDP86-00513R000101520005-7"

"APPROVED FOR RELEASE: 03/20/2001 CIA-RDP86-00513R000101520005-7

ANDREYEV, O.

Atoms test soil. Tekh.mol. 29 no.4:18 Ap '61. (MIRA 14:5)
(Soil moisture)

APPROVED FOR RELEASE: 03/20/2001 CIA-RDP86-00513R000101520005-7"

"APPROVED FOR RELEASE: 03/20/2001 CIA-RDP86-00513R000101520005-7

ANDREYEV, O

VEYTSMAN, Natan Rakhmil'yevich., professor; ANDREYEV, O., redaktor; ALEKSANDROV, V., tekhnicheskiy redaktor.

[Balance sheets and their analysis in capitalist enterprises] Balansy kapitalisticheskikh predpriiatii i ikh analiz. Izd. 2-oe, dop. Moskva, Vneshtorgizdat, 1956. 186 p. (MLRA 10:4)
(Financial statements)

APPROVED FOR RELEASE: 03/20/2001 CIA-RDP86-00513R000101520005-7"

"APPROVED FOR RELEASE: 03/20/2001 CIA-RDP86-00513R000101520005-7

ANDREYEV, O., inzh.

Electronic hydrometer. Zemledelie 24 no.1:53 Ja '62. (MIRA 15:2)

(Hydrometer)

APPROVED FOR RELEASE: 03/20/2001 CIA-RDP86-00513R000101520005-7"

"APPROVED FOR RELEASE: 03/20/2001 CIA-RDP86-00513R000101520005-7

ANDREYEV, G. [illegible] inzh.-podpolkovnik

Nuclear engines. Voen. znan. 40 no.9:35-36 [illegible]

(NTI 17:12)

APPROVED FOR RELEASE: 03/20/2001 CIA-RDP86-00513R000101520005-7"

"APPROVED FOR RELEASE: 03/20/2001 CIA-RDP86-00513R000101520005-7

ANDREYEV, O.A.

Soviet Siberia (Ukrainian). Nauka i zhittya, No 11, 1953, 21-22

Brief survey of the natural conditions and ecomony of Siberia. (RZhGeol, No 1, 1954)

SO: M-31128, 11 Jan 55

APPROVED FOR RELEASE: 03/20/2001 CIA-RDP86-00513R000101520005-7"

"APPROVED FOR RELEASE: 03/20/2001 CIA-RDP86-00513R000101520005-7

ANDREYEV, O.B.

Determining soil moisture with the help of gamma rays. Zemledelie 23 no.1:59-60 Ja '61. (MIRA 13:12)

1. Upravleniye priborov, avtomatiki i vychislitil'noy tekhniki Goskomiteta Soveta Ministrov SSSR po avtomatizatsii i mashinostroyeniyu.
(Soil moisture) (Gamma rays)

APPROVED FOR RELEASE: 03/20/2001 CIA-RDP86-00513R000101520005-7"

"APPROVED FOR RELEASE: 03/20/2001 CIA-RDP86-00513R000101520005-7

ANDREY V, [illegible]

[illegible] of the sand [illegible] bottom and around the well bore on well produ[illegible]. [illegible] 66-70 '64 [illegible] 17:8)

APPROVED FOR RELEASE: 03/20/2001 CIA-RDP86-00513R000101520005-7"

"APPROVED FOR RELEASE: 03/20/2001 CIA-RDP86-00513R000101520005-7

ANDREYEV, O.B.; BOGOMOLOV, A.M.; PETROV, V.P.

Parametron is a highly reliable member of electronic computers. Priborostroenie no.3:18-20 Mr '62. (MIRA 15:4)
(Electronic calculating machines)

APPROVED FOR RELEASE: 03/20/2001 CIA-RDP86-00513R000101520005-7"

"APPROVED FOR RELEASE: 03/20/2001 CIA-RDP86-00513R000101520005-7

S/064/63/000/001/006/007
B101/B186

AUTHOR: Andreyev, O. B.

TITLE: Portable rod-shaped pH meter

PERIODICAL: Khimicheskaya promyshlennost', no. 1, 1963, 73

TEXT: The ПШП -58 (PShP-58) pH meter (weight - 1.5 kg, height - 500 mm, diameter of the immersible part - 34 mm) for direct measurement of pH in commercial aqueous solutions by immersion of the rod-shaped lower part, containing a glass electrode, is described. The measurement range of the apparatus is 2 - 12 pH. Its principle of operation is based on adsorption of hydrogen ions by a glass electrode and comparison of the potential against a silver chloride electrode. The circuit is a d-c tube voltmeter with the high-resistance input made necessary by the glass electrode having a resistance up to 500 Mohm. The apparatus is fed by a dry-cell battery. The circuit provides corrections for temperature, zero adjustment, and changes in battery voltage. The indication of the millivoltmeter becomes stable after 1 - 2 minutes. Measurement errors do not exceed ± 0.1 to ± 0.2 of measurement values. The apparatus is produced by the Goriyskiy priborostroitel'nyy zavod Gruzinskogo sovnarkhoza (Gori

Card 1/2

APPROVED FOR RELEASE: 03/20/2001 CIA-RDP86-00513R000101520005-7"

"APPROVED FOR RELEASE: 03/20/2001 CIA-RDP86-00513R000101520005-7

Portable rod-shaped pH meter

S/064/63/000/001/006/007
B101/B186

Instrument Plant of the Georgian sovnarkhoz). There are 2 figures.

Card 2/2

APPROVED FOR RELEASE: 03/20/2001 CIA-RDP86-00513R000101520005-7"

"APPROVED FOR RELEASE: 03/20/2001 CIA-RDP86-00513R000101520005-7

ANDREYEV, O.B.

New instruments. Priborostroenie no.3:27 Mr '63. (MIRA 16:6)

(Electronic instruments)

APPROVED FOR RELEASE: 03/20/2001 CIA-RDP86-00513R000101520005-7"

"APPROVED FOR RELEASE: 03/20/2001 CIA-RDP86-00513R000101520005-7

ANDREYEV, O.B.

Automatic high frequency capacity conductometer AVK-60-2. Zav.lab. 29 no.7:893-894 '63. (MIRA 16:8)

1. Upravleniye priborov avtomatiki i vychislitel'noy tekhniki Gosudarstvennogo komiteta po avtomatizatsii i mashinostroyeniyu pri Gosplane SSSR.

(Electrolytes—Conductivity)

APPROVED FOR RELEASE: 03/20/2001 CIA-RDP86-00513R000101520005-7"

"APPROVED FOR RELEASE: 03/20/2001 CIA-RDP86-00513R000101520005-7

ANDREYEV, C.P.

New [illegible] apparatus. [illegible]

([illegible])

[illegible] uprovieniya [illegible]

APPROVED FOR RELEASE: 03/20/2001 CIA-RDP86-00513R000101520005-7"

"APPROVED FOR RELEASE: 03/20/2001 CIA-RDP86-00513R000101520005-7

ANDREYEV, O.B.

Development of the laboratory instrument manufacture and means for automation. Zav. lab. 30 no.9:1043-1044 '64.

(MIRA 18:3)

APPROVED FOR RELEASE: 03/20/2001 CIA-RDP86-00513R000101520005-7"

"APPROVED FOR RELEASE: 03/20/2001 CIA-RDP86-00513R000101520005-7

ANDREYEV, O.B.; LOGASHEV, O.P.

Devices for scientific and laboratory research. Zav.lab. 31 no.4:516-518 '65. (MIRA 18:12)

APPROVED FOR RELEASE: 03/20/2001 CIA-RDP86-00513R000101520005-7"

"APPROVED FOR RELEASE: 03/20/2001 CIA-RDP86-00513R000101520005-7

ANDRENEV, O.B.

New devices for scientific research. Zav.lab. 31 no.10:1284-1284 '65. (MIRA 18:1)

APPROVED FOR RELEASE: 03/20/2001 CIA-RDP86-00513R000101520005-7"

"APPROVED FOR RELEASE: 03/20/2001 CIA-RDP86-00513R000101520005-7

ANDREYEV, O.L.; YARITSYNA, I.A.

Producing a calibrated thermal neutron flux. Nov. nauch.-issl. rab. po metr. VNIIM no.2:63-66 '64. (MIRA 18:4)

APPROVED FOR RELEASE: 03/20/2001 CIA-RDP86-00513R000101520005-7"

"APPROVED FOR RELEASE: 03/20/2001 CIA-RDP86-00513R000101520005-7

ANDREYEV, O.L.; KOCHIN, A.Ye.; STUKOV, G.M.; YARITSYNA, I.A.

Absolute measurement of the yield of a neutron source by the gold foil activation method. Atom energ. 16 no.3:255-256 Mr '64. (MIRA 17:3)

APPROVED FOR RELEASE: 03/20/2001 CIA-RDP86-00513R000101520005-7"

"APPROVED FOR RELEASE: 03/20/2001 CIA-RDP86-00513R000101520005-7

ACCESSION NR: AP4020336 S/0089/64/016/003/0255/0256

AUTHOR: Andreyev, O. L.; Kochin, A. Ye.; Stukov, G. M.; Yaritsy*ns, I. A.

TITLE: Absolute measurement of neutron source yield by the gold foil activation method

SOURCE: Atomnaya energiya, v. 16, no. 3, 1964, 255-256

TOPIC TAGS: neutron source yield, thermal neutron, gold foil activation method, resonance activity, Ra Be source

ABSTRACT: Thermal neutron distribution of a Ra-Be neutron source in a moderator (mostly distilled water) is measured using gold foils activation analysis. Gold foils are placed at several points and the absolute amount of β-activity of these foils is measured. Since thermal neutron distribution does not depend on the type of detector, the relation of specific activity of gold foil to the number of detector readings placed at the same distance from the neutron source, is constant for any distance. A complete yield of neutron source Q may be obtained from the ratio

Card 1/3

APPROVED FOR RELEASE: 03/20/2001 CIA-RDP86-00513R000101520005-7"

"APPROVED FOR RELEASE: 03/20/2001 CIA-RDP86-00513R000101520005-7

ACCESSION NR: AP4020336

$$Q = 4\pi \frac{\sigma_H n_H}{\sigma_{Au} n_{Au}} F \int_0^\infty I(r) r^2 dr,$$

where σ_H and σ_{Au} are the thermal neutron cross sections of capture by hydrogen and gold; n_H and n_{Au} are atom concentrations of hydrogen in water and of gold in foil; and F is the relation of specific activity of gold foil to the number of neutron detector readings at the same distance. The integral value is found be means of measuring I (r) at various distances from the source. In practice, the integration is by the graphic method. The formula is only true for detectors whose efficiency satisfied the 1/v law. The cross section for Au^{197} follows this law only up to an energy of 4.95 ev. (first resonance); therefore a portion of the resonance activity determined with the aid of a cadmium screen should be considered. In measuring neutron yield of Ra - Be-source one should consider correction in self-shielding of neutron flux in gold foil and perturbation of true distribution of neutrons in the moderator during calculation of coefficient F. This correction is (5 ± 1)% for circular foil with a 20 mm. diameter and a 0.02 mm. thickness. In computing coefficient F, a correction should be

Card 2/3

APPROVED FOR RELEASE: 03/20/2001 CIA-RDP86-00513R000101520005-7"

"APPROVED FOR RELEASE: 03/20/2001 CIA-RDP86-00513R000101520005-7

ACCESSION NR: AP4020336

introduced into resonance absorption of neutrons by gold. After computation the correction was (0.5 ± 0.1)%. A correction in thermal neutron absorption in the same source, computed by macroscopic cross section of source absorption is (0.7 ± 0.1)%. Based on the works of A. de Troyer et al (Bull. cl. sci. Acad. roy. Belgique, 40, 2, 150 (1954)) and K. Geiger and G. Whyte (Canad. J. Phys., 37, 256 (1959)) the correction in fast neutron absorption in oxygen is (2.2 ± 0.3)%. In addition, the determination error of spatial distribution area of neutrons is ± 1.3% and the determination error of the cross section for σ_{Au} is ± 0.3. For σ_{H} it is ± 0.6%. Error in absolute measurement of activity is 1%. The root mean square error of the method is ± 2.1%. Having taken these corrections into account, it was determined that neutron yield of Ra - Be of source Q is (3.22 ± 0.07) x 10^6 neutr./sec. Orig. art. has: 2 tables

ASSOCIATION: None

SUBMITTED: 18Apr63 DATE ACQ: 31Mar64 ENCL: 00

SUB CODE: NP NO REF SOV: 000 OTHER: 005

Card 3/3

APPROVED FOR RELEASE: 03/20/2001 CIA-RDP86-00513R000101520005-7"

"APPROVED FOR RELEASE: 03/20/2001 CIA-RDP86-00513R000101520005-7

L 14681-66 EWT(m)/EPF(n)-2/EWA(h) DM
ACC NR: AP6008257 SOURCE CODE: UR/0089/65/019/002/0181/0183

AUTHOR: Andreyev, O. L.; Silin, Yu. S.; Stukov, G. M.; Fominykh, V. I.; Shchebolev, V. T.; Yaritsyna, I. A.

72
B

ORG: none

TITLE: International comparison of neutron sources 19,44,55

SOURCE: Atomnaya energiya, v. 19, no. 2, 1965, 181-183

TOPIC TAGS: neutron distribution, radioactive source, neutron, radium, beryllium, radiation counter

ABSTRACT: The relative measurements of the Canadian Ra-α-Be neutron source were carried out considering the neutron distribution in open geometry and using a long counter which could turn the source at any required angle. With the source axis of rotation coinciding with the cylinder axis, the asymmetry was 1% and with the source axis turned to the side of the surface it was 1.5%. The relative measurements for the source indicated 3.25 neutrons/sec. Orig. art. has: 2 figures and 1 table. [NA]

SUB CODE: 20, 18 / SUBM DATE: 13Oct64 / ORIG REF: 003 / OTH REF: 005

Card 1/1 BC UDC: 539.16.08: 539.125.5

2

APPROVED FOR RELEASE: 03/20/2001 CIA-RDP86-00513R000101520005-7"

"APPROVED FOR RELEASE: 03/20/2001 CIA-RDP86-00513R000101520005-7

S/032/61/027/001/035/037
B017/B054

AUTHOR: Andreyev, O. N.

TITLE: Use of Alloy No. 2 Tubes for Heating Specimens Up to 1200°C in Vacuo

PERIODICAL: Zavodskaya laboratoriya, 1961, Vol. 27, No. 1, pp. 119-120

TEXT: Two types of apparatus for heating specimens to 1200°C in vacuo were built from alloy No. 2. The apparatus consists of a tube which is vertically installed in a silican-carbide furnace. The tube is connected with a rough-vacuum pump and a diffusion pump. The apparatus for softening the specimens in vacuo in a protective atmosphere is of the same design as the apparatus for hardening the specimens. The only difference consists in the tube design. The apparatus built with the use of alloy No. 2 has considerable advantages over an apparatus of quartz tubes. There are 1 figure and 1 Soviet reference.

ASSOCIATION: Institut metallurgii AN SSSR (Institute of Metallurgy AS USSR)

Card 1/1

APPROVED FOR RELEASE: 03/20/2001 CIA-RDP86-00513R000101520005-7"

"APPROVED FOR RELEASE: 03/20/2001 CIA-RDP86-00513R000101520005-7

S/032/61/027/003/023/025
B101/B203

AUTHORS: Andreyev, O. N. and Pronin, A. D.

TITLE: Exchange of experience

PERIODICAL: Zavodskaya laboratoriya, v. 27, no. 3, 1961, 356

TEXT: The authors designed a device for measuring the deformation of specimens in tests for heat resistance by centrifuging. Fig. 1 shows the diagram. By means of six bearings displaced in pairs relatively to each other by 120° on link joints, the device can easily rotate and move vertically on the shaft (d = 50 mm) of the centrifugal machine. The device is used to measure the deformation of specimens with d = 4 mm and l = 65 mm with the use of a loading weight, and l = 95 mm without a weight. Depending on the specific gravity of the alloy tested, one specimen weighs between 4 and 10 g. The deformation is measured with an accuracy of 0.1 mm at the end of the loading weight, or in the center of the specimen, the slide gage being applied so that the deviation from zero position (vertical position) is measured. A slide gage with an accuracy of measurement of up to 0.05 mm can be attached to the device. The device can be

Card 1/2

APPROVED FOR RELEASE: 03/20/2001 CIA-RDP86-00513R000101520005-7"

"APPROVED FOR RELEASE: 03/20/2001 CIA-RDP86-00513R000101520005-7

used to measure the deformations of various materials; its handling is simple. There are 2 figures and 1 Soviet-bloc reference.

ASSOCIATION: Institut metallurgii im. A. A. Baykova Akademii nauk SSSR (Institute of Metallurgy imeni A. A. Baykov of the Academy of Sciences USSR)

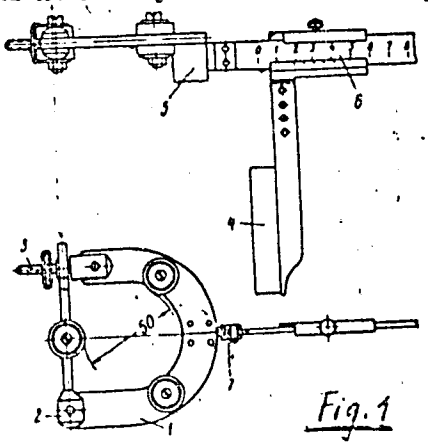

Fig. 1

Legend to Fig. 1: 1) clamp; 2,3,7) fork; 4) adjoining rail; 5) link block; 6) slide gage.

APPROVED FOR RELEASE: 03/20/2001 CIA-RDP86-00513R000101520005-7"

"APPROVED FOR RELEASE: 03/20/2001 CIA-RDP86-00513R000101520005-7

S/032/61/027/004/024/028
B103/B201

AUTHOR: Andreyev, O. N.

TITLE: Clamp for holding samples in heat-resistance tests by the centrifugal method

PERIODICAL: Zavodskaya laboratoriya, v. 27, no. 4, 1961, 471-472

TEXT: The author has devised a new wedge-shaped clamping device for heat-resistance tests by the centrifugal method, in which the drawbacks of clamps used hitherto have been removed. The manufacture of conventional clamps is complicated, the assembly of their elements is cumbersome, as they have to be threaded. Moreover, the thread in old types of clamps burns out after 2-3 tests at higher temperatures. Finally, they are not suited for tests on samples made of brittle material. The author's clamping device allows 24 workpieces to be fastened simultaneously. It is made of heat-resistant alloy "нимоник" (nimonik). Disk 1 (Fig. 1) has 24 slits at the edge and is encircled by ring 2. 24 wedges, likewise made of nimonik, serve for fastening the workpieces to be tested. All these elements are easy to manufacture. In the assembly, ring 2 is

Card 1/3

APPROVED FOR RELEASE: 03/20/2001 CIA-RDP86-00513R000101520005-7"

"APPROVED FOR RELEASE: 03/20/2001 CIA-RDP86-00513R000101520005-7

pressed onto disk 1, and the whole device is screwed onto the shaft of the centrifugal machine. Test sample 4 is stuck into a slit and fastened by a special wedge. This is made possible by the marked tapered shape of the disk slit on one side, and the tapered shape of the wedge (4°). The mounting of 24 samples takes 20 min. When the test is over, the upper parts of the samples can be easily removed from the disk. The lifetime of the new device is 5 to 6 times that of the older types. [Abstracter's note: Essentially full translation]. There are 2 figures.

ASSOCIATION: Institut metallurgii im. A. A. Baykova Akademii nauk SSSR (Institute of Metallurgy imeni A. A. Baykov of the Academy of Sciences USSR)

APPROVED FOR RELEASE: 03/20/2001 CIA-RDP86-00513R000101520005-7"

"APPROVED FOR RELEASE: 03/20/2001 CIA-RDP86-00513R000101520005-7

Clamp for holding samples in ...

S/032/61/027/004/024/028
B103/B201

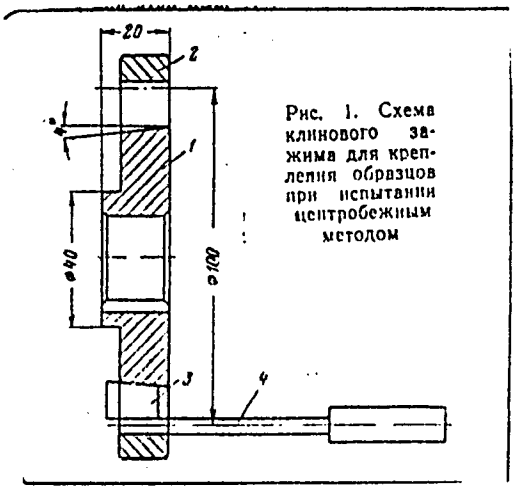

Рис. 1. Схема клинового зажима для крепления образцов при испытании центробежным методом

Card 3/3

APPROVED FOR RELEASE: 03/20/2001 CIA-RDP86-00513R000101520005-7"

"APPROVED FOR RELEASE: 03/20/2001 CIA-RDP86-00513R000101520005-7

S/032/62/028/012/013/023
B104/B186

AUTHOR: Andreyev, O. N.

TITLE: Preparation and calculation of samples in heat-resistance tests using the centrifugal method

PERIODICAL: Zavodskaya laboratoriya, v. 28, no. 12, 1962, 1487-1488

TEXT: A centrifugal method (not specified here) was used to determine the heat resistance of various alloys on round samples 4-mm thick and flat samples 1-4 mm thick. These were clamped on one side, protruding 80 mm. Additional loads could be applied to increase stress, which was read from the indications of the sag deflections (deformation) under different loads. As an example, the stress as a function of the sag deflection is shown in Fig. 1 for tests with and without additional loads. The results for titanium alloys are plotted in Fig. 2. There are 2 figures.

ASSOCIATION: Institut metallurgii im. A. A. Baykova (Institute of Metallurgy imeni A. A. Baykov)

APPROVED FOR RELEASE: 03/20/2001 CIA-RDP86-00513R000101520005-7"

"APPROVED FOR RELEASE: 03/20/2001 CIA-RDP86-00513R000101520005-7

ACCESSION NR: AT4007046 S/2598/63/000/010/0234/0244

AUTHOR: Kornilov, I.I.; Mikheyev, V.S.; Andreyev, O.N.; Mayboroda, P.S.

TITLE: Heat resistance of some titanium alloys at 450-700 C

SOURCE: AN SSSR. Institut metallurgii. Titan i yego splavy*, no. 10, 1963. Issledovaniya titanovy*kh splavov, 234-244

TOPIC TAGS: titanium alloy heat resistance, titanium alloy, OT-4 alloy, OT-4-2 alloy, AT-3 alloy, AT-4 alloy, AT-6 alloy, AT-8 alloy, AT-9-0 alloy, AT-10 alloy, AT-10-0 alloy, AT-12 alloy, Ti sub 3 Al base alloy, titanium aluminum alloy, titanium aluminum manganese alloy, titanium aluminum vanadium alloy, VT-5-1 alloy, VT-14 alloy

ABSTRACT: The heat resistance of the VT-1, VT-5-1, VT-14, OT-4-2, AT-3, AT-4, AT-6, and AT-8 alloys was tested by a simple centrifugal method to determine the creep limit under thermal loads. Tests were carried out under loads of 20 kg/mm^2 at temperatures up to 700 C; specifically, tests were conducted at 450 C for 5000 hours, at 500 C for 250 hours, at 550 C for 100 hours, at 600 C for 50 hours, and at 700 C for 500 hours. Isotherms for the tested conditions were plotted. It was concluded that the VT-1 and VT-14 alloys are not heat resistant at any of the temperatures. The highest heat resistance at 600-700 C was shown by the AT-10 and AT-12 alloys, which contain

APPROVED FOR RELEASE: 03/20/2001 CIA-RDP86-00513R000101520005-7"

"APPROVED FOR RELEASE: 03/20/2001 CIA-RDP86-00513R000101520005-7

ACCESSION NR: AT4007046

7 or 8 alloying elements, and the ST-2 alloy, which contains Ti_3Al as a main component. The AT-3 and AT-4 alloys showed good heat resistance up to 500 C and the AT-6 alloy up to 550 C. The AT-8 alloy, containing Al, Cr, Fe, Si, and B on a base of α-titanium showed a greater heat resistance at higher temperatures (up to 600 C) than the OT-4 and OT-4-2 alloys containing Ti, Al, and Mn or Ti, Al, and V with an $\alpha+\beta$ structure and VT-6 or VT-5-1 alloys containing Ti, Al, and Sn. It was proved that the heat resistance is increased by alloying with many elements. The heat resistance of the alloys containing six alloying elements increased in the direction AT-3 $\rightarrow$ AT-4 $\rightarrow$ AT-6 $\rightarrow$ AT-8 as their aluminum content increased. This was explained by the increase in the temperature of the $\alpha \rightleftarrows \beta$ transformation and the strengthening of the α solid solution. Orig. art. has: 10 figures and 2 tables.

ASSOCIATION: Institut metallurgii AN SSSR (Metallurgical Institute, AN SSSR)

SUBMITTED: 00 DATE ACQ: 27Dec63 ENCL: 00

SUB CODE: ML NO REF SOV: 016 OTHER: 000

Card 2/2

APPROVED FOR RELEASE: 03/20/2001 CIA-RDP86-00513R000101520005-7"

"APPROVED FOR RELEASE: 03/20/2001 CIA-RDP86-00513R000101520005-7

KORNILOV, I.I.; SHINYAYEV, A.Ya.; ANDREYEV, O.N.

Activation energy of creep and the mechanism of plastic deformation of titanium alloys. Titan i ego splavy no.10:251-253 '63. (MIRA 17:1)

APPROVED FOR RELEASE: 03/20/2001 CIA-RDP86-00513R000101520005-7"

"APPROVED FOR RELEASE: 03/20/2001 CIA-RDP86-00513R000101520005-7

L 15211-65 EWT(m)/EWP(w)/EWA(d)/EWP(v)/EWP(t)/EWP(k)/EWP(b) Pf-4 SSD/AFTC(p)/AEDC(a)/ASD(m)-3/ASD(p)-3/AFMD(t)/IJP(c) JD/HM/MLK/MJW

ACCESSION NR: AT4048073 S/0000/64/000/000/0208/0211

AUTHOR: Kornilov, I. I., (Professor, Doctor of chemical sciences); Andreyev, O. N.; Voshedchenko, B. M.

TITLE: Investigation of creep and thermal stability of AT4 alloy at 500C

SOURCE: Soveshchaniye po metallurgii, metallovedeniyu i primeneniyu titana i yego splavov. 5th, Moscow, 1963. Metallovedeniye titana (Metallography of titanium); trudy* soveshchaniya. Moscow, Izd-vo Nauka, 1964, 208-211

TOPIC TAGS: titanium alloy, AT4 alloy, creep, creep rate, thermal stability, creep strength, structural stability

ABSTRACT: Creep behavior and thermal stability of AT4 titanium-base alloy (4.67% Al, 0.86% Cr, 0.31% Fe, 0.27% Si, and 0.001% B) have been investigated at 500C. In a 1000-hr test under 5 kg/mm^2 stress, total elongation was 0.5%, and under 2.5 kg/mm^2 stress it dropped to 0.18%. The creep rate at the steady stage was $0.3 \cdot 10^{-6}$% per hour under 2.5 kg/mm^2 stress and $1.6 \cdot 10^{-6}$% per hour under 5 kg/mm^2 stress.

Card 1/3

APPROVED FOR RELEASE: 03/20/2001 CIA-RDP86-00513R000101520005-7"

"APPROVED FOR RELEASE: 03/20/2001 CIA-RDP86-00513R000101520005-7

L 15211-65

ACCESSION NR: AT4048073 3

Thus, AT4 alloy at 500C has a substantially higher creep resistance than such titanium alloys as OT4, VT6, and OT4-2; this was also displayed in a 100-hr creep test under a 20 kg/mm² stress (see Fig. 1 of the Enclosure). The mechanical properties of AT4 alloy remain almost unchanged, and it retains its high ductility after 1000 hr under stress at 500C. According to earlier studies, AT4 alloy can be hot- and cold-rolled into various semifinished products, including tubes 6—8 mm in diameter with 0.3—0.8 mm-thick walls. The alloy has satisfactory weldability. Orig. art. has: 3 figures.

ASSOCIATION: none

SUBMITTED: 15Jul64 ENCL: 01 SUB CODE: MM, AS

NO REF SOV: 001 OTHER: 000 ATD PRESS: 3138

Card 2/3

APPROVED FOR RELEASE: 03/20/2001 CIA-RDP86-00513R000101520005-7"

"APPROVED FOR RELEASE: 03/20/2001 CIA-RDP86-00513R000101520005-7

L 15211-65

ACCESSION NR: AT4048073 ENCLOSURE: 01

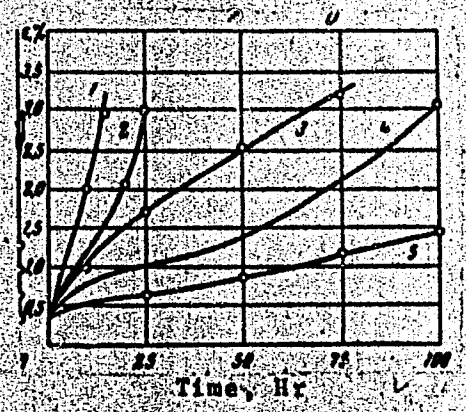

Fig. 1 Creep curves for titanium alloys

1 - OT4, 2 - VT5, 3 - VT5-1, 4 - VT6, 5 - AT4

Card 3/3

APPROVED FOR RELEASE: 03/20/2001 CIA-RDP86-00513R000101520005-7"