"APPROVED FOR RELEASE: 06/05/2000 CIA-RDP86-00513R000101920018-9

ARDELT, Wojciech

Elastin, elastase, elastolysis. Postepy biochem. 10 no.2:245-264 '64.

APPROVED FOR RELEASE: 06/05/2000 CIA-RDP86-00513R000101920018-9"

"APPROVED FOR RELEASE: 06/05/2000 CIA-RDP86-00513R000101920018-9

ARDELT, Wojciech

Biochemistry of lathyrism. Postepy biochem. 11 no.4:413-426 '65.

APPROVED FOR RELEASE: 06/05/2000 CIA-RDP86-00513R000101920018-9"

"APPROVED FOR RELEASE: 06/05/2000 CIA-RDP86-00513R000101920018-9

ARDELT, Wojciech

Elastin and its role in some pathological conditions. Reumatologia (Warsz.) 3 no.2:179-186 '65.

1. Z Zakladu Biochemii Instytutu Reumatologicznego w Warszawie (Kierownik: dr. I. Niedzwiecka-Namyslowska; Konsultant naukowy: prof. dr. E. Kowalski).

APPROVED FOR RELEASE: 06/05/2000 CIA-RDP86-00513R000101920018-9"

"APPROVED FOR RELEASE: 06/05/2000 CIA-RDP86-00513R000101920018-9

KSIEZNY, S.; ARDELT, W.; BUDZYNSKI, A.Z.; NIEDZWIECKA-NAMYSLOWSKA, Izabella; WOJTECKA-LUKASIK, Elzbieta

Some properties of elastin degradation products. Acta biochim. Pol. 12 no.4:327-335 '65.

1. Department of Biochemistry, Institute of Rheumatology, Warszawa.

APPROVED FOR RELEASE: 06/05/2000 CIA-RDP86-00513R000101920018-9"

"APPROVED FOR RELEASE: 06/05/2000 CIA-RDP86-00513R000101920018-9

ARDELYAN, Ye. L.

KOLIBABA, A.P., dotsent; ARDELYAN, Ye.L., kand.med.nauk

Diagnosis of acute otitis media in premature infants [with summary in English]. Vest.oto-rin. 19 no.3:19-24 My-Je '57. (MIRA 10:10)

1. Iz Ukrainskogo nauchno-issledovatel'skogo instituta bolezney ukha, gorla i nosa i kursa LORbolezney [oto-laringologicheskikh bolezney] Khar'kovskogo meditsinskogo stomatologicheskogo instituta.

(OTITIS MEDIA, in inf. and child
diag. in premature ing.)
(INFANT, PREMATURE, dis.
otitis media in premature inf., diag.)

APPROVED FOR RELEASE: 06/05/2000 CIA-RDP86-00513R000101920018-9"

"APPROVED FOR RELEASE: 06/05/2000 CIA-RDP86-00513R000101920018-9

ARDEL'YAHOV, A.M.

Conditions for fog formation in the Simferopol' Airport region. Trudy Ukr.NIGMI no.7:139-146 '57. (MIRA 11:4)
(Simferopol'--Fog)

APPROVED FOR RELEASE: 06/05/2000 CIA-RDP86-00513R000101920018-9"

"APPROVED FOR RELEASE: 06/05/2000 CIA-RDP86-00513R000101920018-9

S/081/62/000/011/030/057
E202/E133

AUTHOR: Arden, T.V.*

TITLE: Extraction of uranium by means of anion exchange from sulphate solutions after leaching.

PERIODICAL: Referativnyy zhurnal, Khimiya, no.11, 1962, 379, abstract 11 K 2. (In the collection of papers: "Izvdecheniye i ochistka redk. metallov" ("Extraction and purification of rare metals"), M., Atomizdat, 1960, 146-159. Discussion, 159-179).

TEXT: A flow sheet for the extraction of uranium and other elements from their sulphate liquors after leaching uranium-containing ores by means of ion exchange resins is described. Properties of uranyl anionic sulphate complexes and the influence of pH on their stability were studied. Results of washing out uranium from the resins by means of nitric acid solution of ammonium nitrate in a 3-column plant are given. Difficulties occurring during the factory exploitation of the anion exchange plant are noted. 10 references.

Card 1/1 [Abstractor's note: Complete translation.]

* USSR ?

APPROVED FOR RELEASE: 06/05/2000 CIA-RDP86-00513R000101920018-9"

"APPROVED FOR RELEASE: 06/05/2000 CIA-RDP86-00513R000101920018-9

ARDENNE, M. fon; SHILLER, S.

Development of electron beam melting techniques. Elektrotekhnika 36 no.8:61-63 Ag '64. (MIRA 17:9)

1. Nauchno-issledovatel'skiy institut Manfreda fon Ardenne, Dresden-Vaysser Khirsh.

APPROVED FOR RELEASE: 06/05/2000 CIA-RDP86-00513R000101920018-9"

"APPROVED FOR RELEASE: 06/05/2000 CIA-RDP86-00513R000101920018-9

ARDENTOV, I.

Excursion to G.I.Nevel'skii's country. Geog.v shkole 20 no.4:60 Jl-Ag '57. (MIRA 10:7)
(Nevel'skii, Gennadii Ivanovich, 1813-1876--
Homes and haunts) (School excursions)

APPROVED FOR RELEASE: 06/05/2000 CIA-RDP86-00513R000101920018-9"

"APPROVED FOR RELEASE: 06/05/2000 CIA-RDP86-00513R000101920018-9

ARDENTOV, I.N.; BELORUSSOV, L.M.; IVANOVA, V.N.; CHISTYKOV, V.A.; BELOV, M., red.; SKVORTSOVA, L., tekhn. red.

[Soligalich] Soligalich. By I.N.Ardentov i dr. Kostroma, Kostromskoe knizhnoe izd-vo, 1960. 146 p. (MIRA 14:7)
(Soligalich)

APPROVED FOR RELEASE: 06/05/2000 CIA-RDP86-00513R000101920018-9"

"APPROVED FOR RELEASE: 06/05/2000 CIA-RDP86-00513R000101920018-9

ARDENTOV, V. V.

21

Welding Electrodes for Non-Ferrous Metals and Their Alloys [Aluminium]. V. V. Ardentov (*Vestn. Mashinostroeniya*, 1946, 26, (1), 67-68; *C. Abs.*, 1946, 40, 6014).—[In Russian]. A description of 8 electrodes used for welding aluminium and its alloys, compiled from material of the German firm Kollberg.

ASM-SLA METALLURGICAL LITERATURE CLASSIFICATION

APPROVED FOR RELEASE: 06/05/2000 CIA-RDP86-00513R000101920018-9"

"APPROVED FOR RELEASE: 06/05/2000 CIA-RDP86-00513R000101920018-9

137-58-6-12489

Translation from: Referativnyy zhurnal, Metallurgiya, 1958, Nr 6, p 187 (USSR)

AUTHOR: Ardentov, V.V.

TITLE: New Electrodes for Welding of Stainless Austenite Steels (Novyye elektrody dlya svarki nerzhaveyushchikh austenitnykh staley)

PERIODICAL: V sb.: Svarochnoye proiz-vo. Len ngrad, Lenizdat, 1957, pp 77-85

ABSTRACT: Investigations performed dealt with a comparative evaluation of brittle tendencies caused by certain grain structures (at 475°C), precipitation of secondary carbides, or transformation into σ phase of metal (of welded facings) obtained in welding processes utilizing six types of electrodes employed in the manufacture of steamship power plants. Electrodes I and II were prepared from wire of the Sv1Kh18N9B type with two different types of coating; electrodes III and IV were made of Cr-Ni-Si-V wire of the EI606 type (TU3378-53) with four different types of basic slag-shielding and alloying coatings. The chemical composition of the facing metal was characterized by Si, Mn, Mo, V, and Nb content. The investigation procedures involved a_k

Card 1/2

APPROVED FOR RELEASE: 06/05/2000 CIA-RDP86-00513R000101920018-9"

"APPROVED FOR RELEASE: 06/05/2000 CIA-RDP86-00513R000101920018-9

137-58-6-12489

New Electrodes for Welding of Stainless Austenite Steels

testing of the weld-facing metal in its original condition and after exposures to temperatures of 340, 425, and 500° for periods ranging from 500 to 1500 hrs, as well as tests on intercrystallite corrosion (fracturing of Gagarin specimens and bending of flat specimens after boiling in $CuSO_4$ and H_2SO_4 solutions for 96 and 48 hours, respectively, in accordance with method A of GOST 6032-51). It is shown that the difference in the degree of reduction of the a_k of the facing metal after exposure to high temperatures is determined by the nonuniform content of α phase therein the amount of which, in turn, is determined by the Cr/Ni ratio and by the presence of ferrite-forming elements, Si, Mo, and V. The metal becomes more brittle as the concentration of α phase or of Si increases. New electrodes utilizing wire of the Sv1Kh18N11M type with an alloying basic coating were developed for welding of steamship power plants as a result of the investigations. The electrodes exhibited no tendencies toward the formation of hot cracks during welding, or toward intercrystallite corrosion at temperatures of 340 and 425° (at exposures of 1500 hrs). The facing metal deposited by these electrodes exhibits and original a_k of 11 kg/cm^2; after a 1500-hr exposure to a temperature of 340°, the a_k is reduced to 9.6 kg/cm^2 and after exposure to 425° and 500° it is reduced to 9.0 kg/cm^2 and 8.3 kg/cm^2, respectively. Electrodes of this type are widely used in the ship-building industry. 1. Arc welding--Electrodes 2. Electrodes--Effectiveness 3. Stainless steel--Welding 4. Welding--Test results 5. Welding--Metallurgical effects V.S.

Card 2/2

APPROVED FOR RELEASE: 06/05/2000 CIA-RDP86-00513R000101920018-9"

"APPROVED FOR RELEASE: 06/05/2000 CIA-RDP86-00513R000101920018-9

25(1) PHASE I BOOK EXPLOITATION SOV/2050

Svarka sbornik statey, [vyp.] 1 (Welding: Collection of Articles, Nr 1) Leningrad, Sudpromgiz, 1958. 246 p. 4,000 copies printed.

Resp. Ed.: G. I. Kapyrin, Candidate of Technical Sciences; Ed.: I. A. Zhirmunskaya; Tech. Ed.: K. N. Volchok.

PURPOSE: This collection of articles is intended for use in research institutes, institutes of higher learning, design offices, and plants.

COVERAGE: These technical papers deal with the results of research in welding technology. The main purpose of this work was to investigate the effects of various welding regimes and heat treatments on the mechanical properties of welds of austenitic and perlitic composition. A number of experiments also dealt with the welding properties and weldability of titanium-base alloys and a number of nonferrous metals. One of the objects of the research was to establish the relationship between the geometry of the weld seam and its physical properties. The crystallization of the weld, its mechanical properties, and the various factors affecting the grain structure of the metal were studied by a number of scientists. Of special practical interest is the study of the behavior of a welded structure in which the elasticity of the material and of the welded joint are not within the same range. These considerations lead to experiments with mechanically induced changes in the properties of the weld seam. Another problem which presents many difficulties in welding is the behavior and changes in the heat-affected zone next to the welded joint. One of the papers deals with experiments in this field. A description is given of the equipment and the technique used in electroslag welding, which is regarded as one of the major advances in modern welding technology. Several papers deal with welding techniques of nonferrous alloys and with the use of special fluxes for this work. Most of the papers are profusely illustrated with graphs, diagrams, and photographs. References are given after each article.

TABLE OF CONTENTS:

Welding (Cont.) SOV/2050

Gal'perin, M.A., Candidate of Technical Sciences; V.V. Ardentov; K.M. Ivanov, Engineer; and Z.I. Kopel'man-Serpukhova. Study of Effect of Prolonged Heat Treatment on Physical and Mechanical Properties of Austenite Weld Seam Metal 73

Baranov, B.P., Engineer, and M.A. Kozlov. Effect of Kind of Current on Quality of Welds in Automatic Welding 86

Nemchinskiy, A.L., Candidate of Technical Sciences. A Mechanical Method of Increasing Durability of Weld Seams in Welding of High-strength Steel 95

Ivanova, T.I., Candidate of Technical Sciences. The Nature of Deformation of Butt-welded Joints in Plastic Deformation by a Concentrated Load 103

Molchanova, L.G., Candidate of Technical Sciences. Effect of the Structural Form of a Welded Joint on Its Durability 115

Nemchinskiy, A.L., Candidate of Technical Sciences. Effect of Flaws on Durability of Welded Joints 126

Card 4/6

APPROVED FOR RELEASE: 06/05/2000 CIA-RDP86-00513R000101920018-9"

"APPROVED FOR RELEASE: 06/05/2000 CIA-RDP86-00513R000101920018-9

GAL'PERIN, M.A., kand.tekhn.nauk; ARDENTOV, V.V.; IVANOV, K.M., inzh.; KOPEL'MAN-SERPUKHOVA, Z.I.

Studying the effect of prolonged heat treatment on the physico-mechanical properties of deposited austenitic metal. Svarka 1:73-85 '58. (MIRA 12:8)

(Hard facing--Testing)
(Electrodes--Testing)
(Metals at high temperature)

APPROVED FOR RELEASE: 06/05/2000 CIA-RDP86-00513R000101920018-9"

"APPROVED FOR RELEASE: 06/05/2000 CIA-RDP86-00513R000101920018-9

AUTHOR: Ardentov, V.V., Candidate of Technical Sciences 135-58-7-17/20

TITLE: On the Revision of GOST 2523-51 "Steel Electrodes for Arc Welding and Fusing" (K peresmotru GOSTa 2523-51 "Elektrody stal'nyye dlya dugovoy svarki i naplavki)

PERIODICAL: Svarochnoye proizvodstvo, 1958, Nr 7, pp 41-42 (USSR)

ABSTRACT: With reference to an article by A.A. Yerokhin on "Basic problems of electrode standardization", the author agrees in general with the suggestions made, but rejects some propositions. He submits his own suggestions including classification of electrodes control of electrode coatings, and tolerances in the length of electrode rods.

1. Welding electrodes---Standards 2. Arc welding---Electrodes

Card 1/1

APPROVED FOR RELEASE: 06/05/2000 CIA-RDP86-00513R000101920018-9"

"APPROVED FOR RELEASE: 06/05/2000 CIA-RDP86-00513R000101920018-9

25(1) SOV/125-59-1-6/15

AUTHOR: Gal'perin, M.A., Ardentov, V.V.

TITLE: The Influence of the Prolonged Tempering of Austenite Welded-On Metal on its Tendency to Intercrystalline Corrosion (Vliyaniye dlitel'nogo stareniya austenitnogo naplavlennogo metalla na sklonnost' yego k mezhkristallitnoy korrozii)

PERIODICAL: Avtomaticheskaya svarka, 1959, Nr 1, p 36-42 (USSR)

ABSTRACT: If a welded structure of 1Kh18N9T-type steel is put into operation under higher temperature conditions, the tendency of the steel and of the metal to intercrystalline corrosion must be determined by methods prescribed by GOST, and after prolonged tempering at working temperatures. The fitness of a material designed to operate under concrete conditions can be determined only after all data had been duly examined. A prolonged tempering at 500°C of the 1Kh18N9T-type steel and of Kh18N9B, Kh20N9B, Kh18N9M3, Kh18N9F2M-type welded-on metals, abruptly decreases the metal resistance to such corrosion. It has been proved experimentally that a loss of

Card 1/2

APPROVED FOR RELEASE: 06/05/2000 CIA-RDP86-00513R000101920018-9"

"APPROVED FOR RELEASE: 06/05/2000 CIA-RDP86-00513R000101920018-9

25(1) SOV/125-59-1-6/15

The Influence of the Prolonged Tempering of Austenite Welded-On Metal on its Tendency to Intercrystalline Corrosion

metal resistance to such corrosion may be ascribed to changes in composition in the carbide phase, especially to an increase of chromium. There are four tables, two photos, one graph, and two Soviet references.

ASSOCIATION: TsNII GKS

SUBMITTED: May 7, 1959

Card 2/2

APPROVED FOR RELEASE: 06/05/2000 CIA-RDP86-00513R000101920018-9"

"APPROVED FOR RELEASE: 06/05/2000 CIA-RDP86-00513R000101920018-9

GAL'PERIN, M.A., kand.tekhn.nauk; ARDENTOV, V.V., kand.tekhn.nauk; IVANOV, K.M., inzh.

Tendency toward intercrystallite corrosion in austenitic filler metal depending on temperature and time of aging. Svarka 2:71-76 '59. (MIRA 14:5)

(Steel--Corrosion) (Metals, Effect of temperature on)

APPROVED FOR RELEASE: 06/05/2000 CIA-RDP86-00513R000101920018-9"

"APPROVED FOR RELEASE: 06/05/2000 CIA-RDP86-00513R000101920018-9

KOPEL'MAN-SERPUKHOVA, Z.I., inzh.; ARDENTOV, V.V., kand.tekhn.nauk; KOMAROVA, N.P.

Welding rod for the automatic deposition of an anticorrosive coating on vessels for work aggressive media. Svarka 2:77-83 '59. (MIRA 14:5)

(Welding rods) (Corrosion and anticorrsives)

APPROVED FOR RELEASE: 06/05/2000 CIA-RDP86-00513R000101920018-9"

"APPROVED FOR RELEASE: 06/05/2000 CIA-RDP86-00513R000101920018-9

KOPEL'MAN-SERPUKHOVA, Z.I., ARDENTOV, V.V., kand.tekhn.nauk,
KOMAROVA, N.P.

New composition of a welding chromium-nickel-niobium austenitic wire. Svar. proizv. no.2:27-29 F '60. (MIRA 13:6)
(Electric welding) (Metal cladding)

APPROVED FOR RELEASE: 06/05/2000 CIA-RDP86-00513R000101920018-9"

"APPROVED FOR RELEASE: 06/05/2000 CIA-RDP86-00513R000101920018-9

ARDERIKHIN, L., tekhnik.

Portable antidust respirators. Mast.ugl. 5 no.11:24 N '56.
(Respirators) (MLRA 10:1)

APPROVED FOR RELEASE: 06/05/2000 CIA-RDP86-00513R000101920018-9"

"APPROVED FOR RELEASE: 06/05/2000 CIA-RDP86-00513R000101920018-9

ARDEVAN, A.

(34)

Bucharest, [illegible] Vol VIII, No 23, [illegible] 63 [illegible]

1. "Indications and Limitations of Anti-Infectious Chemotherapy in Pulmonary Tuberculosis Today," Conf C. [illegible]; pp 1133-1136.

2. "Contributions to the Determination of the Factors Responsible for the Failure of Chemotherapy in Pulmonary Tuberculosis," by Dr. [illegible] [illegible] Tuberculosis," by Dr. [illegible] [illegible] [illegible] [illegible] (Institute [illegible] of Pneumoftisiology) (Bucharest) [illegible] (Institute of Pneumoftisiology) (Bucharest) [illegible] pp 1137-1142.

3. "Research on the Production of Tuberculosis in Alcoholic Patients," by Dr. [illegible], Dr. [illegible] Dr A. [illegible], Dr O. [illegible] and Dr. [illegible] pp [illegible].

4. "Data Involvement in Bacteriostatic Therapy," by Nicolae [illegible], Dr M. [illegible], Dr P. [illegible], Dr O. [illegible], Dr M. [illegible], and Dr Petru [illegible] [illegible] performed at the "[illegible]" Clinic [illegible] [illegible] and the (Clinic [illegible]) for Pneumoftisiology (Counatorul "[illegible]" [illegible] de Tuberculoza "[illegible]") pp 1[illegible]-1[illegible].

5. "Comparative Value of Pathologic Findings in the Cytologic Diagnosis of Bronchopulmonary Cancer," by Prof N. [illegible], Dr [illegible], Dr Ioana [illegible], Dr P. [illegible] and Dr C. [illegible] performed at the Institute of Pneumoftisiology (Institutul de Pneumoftisiologie) (Institutul [illegible]) [illegible] Prof N. [illegible] [illegible] -Surgery, pp [illegible].

6. "Conservative [illegible] of Bronchopulmonary Cancer," Conf J. [illegible] and Dr J. [illegible] pp [illegible]-[illegible].

7. "The Rehabilitation of Preventive Bronchopulmonary Cancer," by Dr. [illegible] and Dr V. [illegible] pp [illegible]-1171.

- 1/ -

APPROVED FOR RELEASE: 06/05/2000 CIA-RDP86-00513R000101920018-9"

"APPROVED FOR RELEASE: 06/05/2000 CIA-RDP86-00513R000101920018-9

CENTEA, Alexandra, dr.; MLADIN, Tr, dr.; GHERMAN, Gr., dr.; SOLOMON, O., dr.; IONESCU, Domitia, dr.; ARDEVAN, A., dr.

Pulmonary tuberculosis in the gastrectomized. Med. intern. 15 no.1: 83-92 Ja '63.

1. Lucrare efectuata in Clinica de ftiziologie, I.M.F. Cluj (director: prof. L. Daniello).

(GASTRECTOMY) (TUBERCULOSIS, PULMONARY)

APPROVED FOR RELEASE: 06/05/2000 CIA-RDP86-00513R000101920018-9"

"APPROVED FOR RELEASE: 06/05/2000 CIA-RDP86-00513R000101920018-9

ARDIKUTSA, V.Ye. (Petrodvorets)

Samson pipeline. Stroi.truboprov. 10 no.10:34-35 O '65.
(MIRA 18:10)

APPROVED FOR RELEASE: 06/05/2000 CIA-RDP86-00513R000101920018-9"

"APPROVED FOR RELEASE: 06/05/2000 CIA-RDP86-00513R000101920018-9

ARDISHVILI, A.A.

Problem of using the analytical method for calculating rock pressure on a pliable support of individual workings in the mines of the Akhaltsikhe deposit. Trudy Inst.gor.dela AN Gruz.SSR 2:65-69 '60. (MIRA 14:10)
(Akhaltsikhe region--Rock pressure)

APPROVED FOR RELEASE: 06/05/2000 CIA-RDP86-00513R000101920018-9"

"APPROVED FOR RELEASE: 06/05/2000 CIA-RDP86-00513R000101920018-9

ZURABISHVILI, Irakliy Ivanovich, kand. tekhn. nauk; KUCHUKHIDZE, K.S., red.; ARDISHVILI, A.A., red.

[Underground mining of manganese deposits] Podzemnaia razrabotka margantsevykh mestorozhdenii. Tbilisi, Izd-vo AN Gruz. SSR, 1963. 407 p. (MIRA 17:5)

APPROVED FOR RELEASE: 06/05/2000 CIA-RDP86-00513R000101920018-9"

"APPROVED FOR RELEASE: 06/05/2000 CIA-RDP86-00513R000101920018-9

LEKISHVILI, Vladimir Illarionovich; MIKELADZE, Aleksandr Semenovich; CHANISHVILI, Vladimir Fomich; ARDISHVILI, A.A., red.

[Methods of mining the coal deposits of Georgia] Metody razrabotki kamennougol'nykh mestorozhdenii Gruzii. Tbilisi, Metsniereba, 1965. 160 p. (MIRA 18:11)

APPROVED FOR RELEASE: 06/05/2000 CIA-RDP86-00513R000101920018-9"

"APPROVED FOR RELEASE: 06/05/2000 CIA-RDP86-00513R000101920018-9

TEMNIKOVA, T.I.; YERSHOV, B.A.; ARDITI, A.I.; RAZUMOVSKAYA, R.N.

Interaction of α-oxybromides with Na derivatives of β-dicarbonyl compounds. Zhur.ob.khim. 33 no.10:3436-3437 O '63. (MIRA 16:11)

1. Leningradskiy gosudarstvennyy universitet.

APPROVED FOR RELEASE: 06/05/2000 CIA-RDP86-00513R000101920018-9"

"APPROVED FOR RELEASE: 06/05/2000 CIA-RDP86-00513R000101920018-9

TEMNIKOVA, T.I.; YERSHOV, B.A.; ARDITI, A.I.

Interaction of metallic derivatives of compounds containing a labile hydrogen atom with α-oxyhalides. Part 5: Regarding the structure of the products of interaction of Na-acetoacetic ester with 1-bromo-3-methyl-1,2,3-epoxybutane, 1-bromo-2,3-epoxybutane, 3-bromo-1,2-epoxybutane, and epibromohydrin. Zhur. ob. khim. 35 no.5:788-795 My '65. (MIRA 18:6)

1. Leningradskiy gosudarstvennyy universitet.

APPROVED FOR RELEASE: 06/05/2000 CIA-RDP86-00513R000101920018-9"

"APPROVED FOR RELEASE: 06/05/2000 CIA-RDP86-00513R000101920018-9

L 7020-66 EWT(m)/EPF(c)/EWP(j)/T RPL WW/RM

ACC NR: AP5026779 SOURCE CODE: UR/0286/65/000/017/0067/0067

AUTHOR: Ushakov, S. N.; Davidenkova, V. V.; Arditi, A. I.

TITLE: A method for producing vinylpyrrolidone copolymers. Class 39, No. 174355 [announced by Institute of High Molecular Compounds, AN SSSR (Institut vysokomolekulyarnykh soyedineniy AN SSSR)]

SOURCE: Byulleten' izobreteniy i tovarnykh znakov, no. 17, 1965, 67

TOPIC TAGS: copolymerization, radical polymerization, polymerization initiator

ABSTRACT: This Author's Certificate introduces a method for producing vinylpyrrolidone copolymers with an unsaturated compound by copolymerizing the corresponding monomers in the block or in solution at 40-70°C in the presence of radical polymerization initiators. A wider variety of water-soluble polymers is provided by using a derivative of *n*-aminobenzoic acid as the unsaturated compound.

SUB CODE: GC,MT/ SUBM DATE: 19Feb64/ UDC: 678.744.3 ORIG REF: 000/ OTH REF: 000

Card 1/1

APPROVED FOR RELEASE: 06/05/2000 CIA-RDP86-00513R000101920018-9"

"APPROVED FOR RELEASE: 06/05/2000 CIA-RDP86-00513R000101920018-9

ARDONOVA, S. I.

"Deionization and the Ignition Potential of a Rarefied Gas in the Presence of Residual Ionization" (Deionizatsiya i potentsial zazhiganiya razrezhennogo gaza pri nalichii ostatochnoy ionizatsii) Elektrichestvo, No. 7, 1950, p 90

All- Union Electrical Engineering Institute (VEI)
Dissertation for Candidate Degree

APPROVED FOR RELEASE: 06/05/2000 CIA-RDP86-00513R000101920018-9"

"APPROVED FOR RELEASE: 06/05/2000 CIA-RDP86-00513R000101920018-9

ARDONOVA, S.I.

Jun 52

USSR/Physics - Deionization

"Deionization and Spark-Over Potential of Rarefied Gases in Presence of Residual Ionization," S. I. Ardonova, All-Union Electrotech Inst imeni Lenin

"Zhur Tekh Fiz" Vol XXII, No 6, pp 981-988

Studied behavior of deionization in argon, crypton, neon and mercury vapor at low pressure (ten to several hundreds of microns of mercury column). Found experimentally that the deionization process in inert gases follows exponential law in variance to mercury vapor. Investigated the dependence of breakdown potential on residual ionization. Indebted to V. L. Granovskiy. Received in revised edition 19 Mar 52.

219T88

APPROVED FOR RELEASE: 06/05/2000 CIA-RDP86-00513R000101920018-9"

"APPROVED FOR RELEASE: 06/05/2000 CIA-RDP86-00513R000101920018-9

SHAYDUROV, V.I., assistent; ARDONOVA, S.I., kand.fiz.-matem. nauk

Effect of the electric field on the propagation velocity of ultrasonic waves in solutions. Trudy VSTI no.1:11-18 '62. (MIRA 17:11)

APPROVED FOR RELEASE: 06/05/2000 CIA-RDP86-00513R000101920018-9"

"APPROVED FOR RELEASE: 06/05/2000 CIA-RDP86-00513R000101920018-9

L 8498-66 (A) EWT(m)/EWP(j)/EWP(t)/EWP(b) JD/RM

ACC NR: AP5028478 SOURCE CODE: UR/0286/65/000/020/0064/0064

AUTHORS: Ardov, D. I.; Kamenetskiy, I. Ya.; Smirnova, A. F.; Sergeyeva, A. A.; Ponomareva, V. M.; Golubeva, A. V.; Luk'yanov, N. P; Yeremina, Ye. N.; Sivograkova, K. A.; Kinter, I. P.; Shalina, V. P.

ORG: none

TITLE: Surfacing for metallic and reinforced concrete decks. Class 39, No. 175643 [announced by Organization of the State Committee on Ship Construction SSSR (Organizatsiya gosudarstvennogo komiteta po sudostroyeniyu SSSR)]

SOURCE: Byulleten' izobreteniy i tovarnykh znakov, no. 20, 1965, 64

TOPIC TAGS: polymer, copolymer, rubber, mineral filler, pigment, metal surfacing, reinforced concrete, ship component, SYNTHETIC RUBBER

ABSTRACT: This Author Certificate presents a surfacing material for metallic and reinforced concrete decks. The surfacing material is based on a binding polymer and on mineral fillers and pigments. To increase its resistance to abrasion and corrosion and to reduce its slipperiness, a copolymer of styrole with nitrylacrylic acid and with butylacrylic rubber is used as the binding polymer.

SUB CODE: 11/ SUBM DATE: 12Mar64

BVK

Card 1/1 UDC: 678.746.2--139.678.046.3 678.047

APPROVED FOR RELEASE: 06/05/2000 CIA-RDP86-00513R000101920018-9"

"APPROVED FOR RELEASE: 06/05/2000 CIA-RDP86-00513R000101920018-9

ARDOVA, Vera Vladimirovna. Prinimal uchastiye MEL'NIKOV, N.A., prof.; GUBKINA, Ye., red.; DANILOVA, V., red.izd-va; YEZHOVA, L.L., tekhn. red.

[A German reader on electrical engineering] Khrestomatiia po elektrotekhnike na nemetskom iazyke. 2.izd. Moskva, Vysshaia shkola, 1963. 97 p. (MIRA 16:5)
(Electric engineering)
(German language--Technical German)

APPROVED FOR RELEASE: 06/05/2000 CIA-RDP86-00513R000101920018-9"

"APPROVED FOR RELEASE: 06/05/2000 CIA-RDP86-00513R000101920018-9

ARDUVANOV, G.

Establishments in Bashkiria. Obshchestv. pit. no.5:35-36 My '58. (MIRA 11:4)

1. Nachal'nik otdela obshchestvennogo pitaniya Ministerstva torgovli Bashkirskoy ASSR.

(Bashkiria--Restaurants, lunchrooms, etc.)

APPROVED FOR RELEASE: 06/05/2000 CIA-RDP86-00513R000101920018-9"

"APPROVED FOR RELEASE: 06/05/2000 CIA-RDP86-00513R000101920018-9

Ardyn, I

Nutritional value of canned green peas. I. Energetic and mineral constituents. Cecylia Hiszpańska, Jan Załęski, Eugenia Rutczyńska-Skonieczna, Barbara Chojnicka, and Innocentyna Ardyn (Państwowego Zakładu Hig., Warsaw). *Roczniki Państwowego Zakładu Hig.* 7, 43-53(1956)(English summary).—Canned peas from 3 production seasons were examd., and the proportion of peas to the brine in cans was estd. The following av. values were found during the chem. analysis per 100 g. of solids: grain content 62.2; moisture 83.44; proteins (N × 6.25) 5.4; fat 0.33; carbohydrates 10.0; cellulose 2.3; and ash 1.07%; Ca 45; Fe 3.0; P 86 mg. %; caloric value 65 kcal. II. Vitamin content. Barbara Desperak-Secomska, Barbara Dietl, and Stefan Księżny. *Ibid.* 55-70.—Mean vitamin content for 31 samples of canned green peas was found to be: β-carotene 0.34; total carotenoids 0.79; vitamin C 8.7; B_1 0.120; B_2 0.088; and nicotinic acid 1.24 mg. %. In the brine vitamin C 8.7; B_1 0.132; B_2 0.058; and nicotinic acid 1.2 mg. %.

R. Ehrlich

Med

APPROVED FOR RELEASE: 06/05/2000 CIA-RDP86-00513R000101920018-9"

"APPROVED FOR RELEASE: 06/05/2000 CIA-RDP86-00513R000101920018-9

ARDZHENIYA, M.S. (Abkhazskaya ASSR); MZHAVANADZE, K.Sh., agronom-entomolog; MITROFANOV, P.I., starshiy spetsialist laboratorii

Using phosphorus organic compounds against citrus pests. Zashch.rast. ot vred. i bol. 3 no.6:33-34 N-D '58. (MIRA 11:12)

1. Direktor sovkhoza imeni Il'icha (for Ardzheniya). 2. Sovkhoz imeni Il'icha (for Mzhavanadze). 3. Abkhazskaya karantinnaya laboratoriya (for Mitrofanov).
(Phosphorus organic compounds) (Citrus fruits--Diseases and pests)

APPROVED FOR RELEASE: 06/05/2000 CIA-RDP86-00513R000101920018-9"

"APPROVED FOR RELEASE: 06/05/2000 CIA-RDP86-00513R000101920018-9

NESTEROV, V.A., kand.med.nauk; ARDZHANOVA, L.D., vrach (Krasnodar)

Preventing agricultural accidents. Sov. zdrav. 19 no.3:25-28 '60. (MIRA 14:6)

1. Iz kafedry organizatsii zdravookhraneniya Kubanskogo meditsinskogo instituta (ispolnyayushchiy obyazannosti zaveduyushchego V.A.Nesterov) i Krasnodarskoy krayevoy klinicheskoy bol'nitsy (glavnyy vrach G.V.Novitskaya).

(AGRICULTURE--ACCIDENTS)

APPROVED FOR RELEASE: 06/05/2000 CIA-RDP86-00513R000101920018-9"

"APPROVED FOR RELEASE: 06/05/2000 CIA-RDP86-00513R000101920018-9

ARDZHEVANIDZE, I.A.

Georgian military road; a sketch on regional study; Tbilisi, Tekhnika da shroma, 1950.

SO: MLRA, May, 1952

APPROVED FOR RELEASE: 06/05/2000 CIA-RDP86-00513R000101920018-9"

"APPROVED FOR RELEASE: 06/05/2000 CIA-RDP86-00513R000101920018-9

ARDZHEVANIDZE, I.A.; ELIASHVILI, K., redaktor; GVINIASHVILI, A. tekhnicheskiy redaktor.

[Georgian military road; a regional study with added outline maps of itineraries and bibliography] Voenno-Gruzinskaia doroga; kraevedcheskii ocherk s prilozheniem skhemat. karty marshruta i bibliografii. Tbilisi, [Gosizdat Gruzinskoi SSR] 1954. 250 p. (MLRA 8:8)

(Georgia--Description and travel)

APPROVED FOR RELEASE: 06/05/2000 CIA-RDP86-00513R000101920018-9"

"APPROVED FOR RELEASE: 06/05/2000 CIA-RDP86-00513R000101920018-9

ARE, F.E., inzhener.

Electric controlling of the freezing process in sinking foundation pits. Nov. tekh. i pered. op. v stroi. 18 no. 9:21-23 S '56. (MLRA 9:10)

(Foundations) (Soil freezing)

APPROVED FOR RELEASE: 06/05/2000 CIA-RDP86-00513R000101920018-9"

"APPROVED FOR RELEASE: 06/05/2000 CIA-RDP86-00513R000101920018-9

ARE, F.E.

Some problems in controlling artificial freezing of grounds. Izv. Sib. otd. AN SSSR no.4:100-109 '58. (MIRA 11:9)

1.Severo-vostochnoye otdeleniye instituta merzlotovedeniya AN SSSR.

(Frozen ground)

APPROVED FOR RELEASE: 06/05/2000 CIA-RDP86-00513R000101920018-9"

"APPROVED FOR RELEASE: 06/05/2000 CIA-RDP86-00513R000101920018-9

ARE, F.E., Cand Tech Sci — (diss) "~~Control methods of~~ Methods of controlling the process of the formation of frozen ~~curtains~~ screens in the artificial freezing of grounds for the ~~passage~~ cutting of construction foundation pits." Yakutsk, 1959. 20 pp (Acad of Sci USSR. Inst of Permafrost Studies im V.A. Obrutchev). 125 copies (KL,39-59,104)

39

APPROVED FOR RELEASE: 06/05/2000 CIA-RDP86-00513R000101920018-9"

"APPROVED FOR RELEASE: 06/05/2000 CIA-RDP86-00513R000101920018-9

ARE, F.E., inzh.

Determining the average temperature of frozen ground walls. Shakht. stroi. no.3:22-23 Mr '59. (MIRA 12:4)

1. Severo-vostochnoye otdeleniye Instituta merzlotovedeniya AN SSSR.
(Frozen ground) (Shaft sinking)

APPROVED FOR RELEASE: 06/05/2000 CIA-RDP86-00513R000101920018-9"

"APPROVED FOR RELEASE: 06/05/2000 CIA-RDP86-00513R000101920018-9

ARE, F., kand. tekhn. nauk, otv. red.; MAKARENKO, M.G., red.izd-va; VOLKOVA, V.V., tekhn. red.

[Thermal processes in frozen rocks] Teplovye protsessy v merzlykh gornykh porodakh. Moskva, Izd-vo "Nauka," 1964. 198 p. (MIRA 17:3)

1. Akademiya nauk SSSR. Sibirskoye otdeleniye. Institut merzlotovedeniya.

APPROVED FOR RELEASE: 06/05/2000 CIA-RDP86-00513R000101920018-9"

"APPROVED FOR RELEASE: 06/05/2000 CIA-RDP86-00513R000101920018-9

ARE, F.E.

Temperature measurements in thermal holes in artificial freezing of soils. Trudy Sev.-Vost.otd.Inst.merzl.AN SSSR no.1:62-70 '58. (MIRA 16:12)

APPROVED FOR RELEASE: 06/05/2000 CIA-RDP86-00513R000101920018-9"

"APPROVED FOR RELEASE: 06/05/2000 CIA-RDP86-00513R000101920018-9

ARESHKINA, L.Ya.; RAMINYA, L.O. [Ramina, L.]; ARE, R.Yu.; KARKLIN'SH, R.Ya. [Karklins, R.]

Isolation and purification of L-lysine from culture fluid by the ion exchange method. Prikl. biokhim. i mikrobiol. 1 no.4:404-405 Jl-Ag '65. (MIRA 18:11)

1. Institut biokhimii imeni A.N.Bakha AN SSSR, Institut mikrobiologii imeni A.Kirkhenshteyna AN Latviyskoy SSR i Rizhskiy zavod biokhimicheskikh preparatov.

APPROVED FOR RELEASE: 06/05/2000 CIA-RDP86-00513R000101920018-9"

"APPROVED FOR RELEASE: 06/05/2000 CIA-RDP86-00513R000101920018-9

AREDLYAN, YE. L.

AREDLYAN, Ye.L--"On the Question of Otitis in Premature Babies." *(Dissertation for Degrees in Science and Engineering Defended at USSR Higher Educational Institutions.) Kharkov Medical Inst, Kharkov, 1955

SO: Knizhnaya, Letopis', No. 25, 18 Jun 55

* For Degree of Candidate in Medical Sciences

APPROVED FOR RELEASE: 06/05/2000 CIA-RDP86-00513R000101920018-9"

"APPROVED FOR RELEASE: 06/05/2000 CIA-RDP86-00513R000101920018-9

AREDOV, Yu., starshina 1-oy stat'i

"The submarine" by S.S.Ivanov. Reviewed by IU.Aredov. Starsh.-serzh. no.3:25 Mr '62. (MIRA 15:4)
(Submarine boats) (Ivanov, S.S.)

APPROVED FOR RELEASE: 06/05/2000 CIA-RDP86-00513R000101920018-9"

"APPROVED FOR RELEASE: 06/05/2000 CIA-RDP86-00513R000101920018-9

KUTSENKO, G.; DUVANKOV, G.; AREFINA, V. (Permskaya obl, st. Utes); KOLGANOV, I., yurist

Editor's mail. Okhr. truda i sots. strakh. 5 no.8:44-45 Ag '62. (MIRA 15:7)

1. Vneshtatnyy tekhnicheskiy inspektor Magadanskogo oblastnogo komiteta professional'nykh soyuzov (for Kutsenko). 2. Rukovoditel' obshchestvennogo sovta pri otdele okhrany truda zhurnala "Okhrana truda i sotsial'noye strakhovaniye" (for Duvankov).

(Employer's liability)
(Maternal and infant welfare—Law and legislation)

APPROVED FOR RELEASE: 06/05/2000 CIA-RDP86-00513R000101920018-9"

"APPROVED FOR RELEASE: 06/05/2000 CIA-RDP86-00513R000101920018-9

AREFOLOV, V.A.

Role of Toxoplasma infections in embryonal pathology; toxoplasmosis anencephalia and other forms of congenital toxoplasmosis. Zhur. nevr. i psikh. 61 no.7:1056-1058 '61. (MIRA 15:6)

1. Kafedra patologicheskoy anatomii (zav. - prof. V.K. Beletskiy) Ryazanskogo meditsinskogo instituta imeni Pavlova.
(TOXOPLASMOSIS) (MONSTERS)

APPROVED FOR RELEASE: 06/05/2000 CIA-RDP86-00513R000101920018-9"

"APPROVED FOR RELEASE: 06/05/2000 CIA-RDP86-00513R000101920018-9

AREFOLOV, V.A.

Effect of actinomycin D and ribonuclease on DNA synthesis and content in the cells of Ehrlich's ascitic carcinoma; microspectrophotometric and autoradiographic analysis. Vest. AMN SSSR 20 no.11:80-86 '65 (MIRA 19:1)

1. Institut morfologii cheloveka AMN SSSR, Moskva. Submitted July 23, 1965.

APPROVED FOR RELEASE: 06/05/2000 CIA-RDP86-00513R000101920018-9"

"APPROVED FOR RELEASE: 06/05/2000 CIA-RDP86-00513R000101920018-9

AREF'YEV, A.

Our thanks go to the fire department chiefs. Pozh.delo 8 no.7:17 Jl '62. (MIRA 15:8)
(Novokuznetsk--Metallurgical plants--Fires and fire prevention)

APPROVED FOR RELEASE: 06/05/2000 CIA-RDP86-00513R000101920018-9"

"APPROVED FOR RELEASE: 06/05/2000 CIA-RDP86-00513R000101920018-9

AREF'YEV, A., arkhitektor; ZAKOV, I., arkhitektor; KUTYREV, Ye., arkhitektor

New center for Sochi. Na stroi. Ros. 3 no.5:6-8 My '62. (MIRA 15:9)

(Sochi—City planning)

APPROVED FOR RELEASE: 06/05/2000 CIA-RDP86-00513R000101920018-9"

"APPROVED FOR RELEASE: 06/05/2000 CIA-RDP86-00513R000101920018-9

AREF'YEV, A.A.

Increasing the stability of the EPD-17 automatic electronic potentiometers. Izm.tekh. no.6:41-43 N-D '55. (MLRA 9:3)
(Potentiometer) (Electron-tube voltmeter)

APPROVED FOR RELEASE: 06/05/2000 CIA-RDP86-00513R000101920018-9"

"APPROVED FOR RELEASE: 06/05/2000 CIA-RDP86-00513R000101920018-9

AREF'YEV, A.A., kand. tekhn. nauk

Determining the factors of reversing of ships equipped with controllable-pitch(VRSh) propellers. Sudostroenie 24 no. 6:12-16 Je '58. (MIRA 11:8)

(Propellers)

APPROVED FOR RELEASE: 06/05/2000 CIA-RDP86-00513R000101920018-9"

"APPROVED FOR RELEASE: 06/05/2000 CIA-RDP86-00513R000101920018-9

9(2) SOV/115-59-2-18/38

AUTHOR: Aref'yev, A.A.

TITLE: Three Canal Amplifier for Thermal Pairs (Trekhkanal'naya usilitel'naya apparatura dlya termopar)

PERIODICAL: Izmeritel'naya tekhnika, 1959, Nr 2, pp 34-35 (USSR)

ABSTRACT: Recording temperature oscillations with the help of thermal pairs and loop oscillographs requires the thermal pairs to be amplified beforehand. The author then describes briefly the three canal apparatus 3-UT-1, which is intended for this purpose. There are 2 graphs and 1 photograph.

Card 1/1

APPROVED FOR RELEASE: 06/05/2000 CIA-RDP86-00513R000101920018-9"

"APPROVED FOR RELEASE: 06/05/2000 CIA-RDP86-00513R000101920018-9

35292
S/637/61/000/000/005/008
D201/D301

9,7300(1159)

AUTHORS: Tsapenko, M.P., Candidate of Technical Sciences, Senior Scientific Co-worker, Aref'yev, A.A., Engineer and Kasperovich, A.N., Junior Scientific Co-worker

TITLE: A digital multi-channel electronic millivolt meter

SOURCE: Konferentsiya po avtomaticheskomu kontrolyu i metodam elektricheskikh izmereniy. Novosibirsk, 1959. Trudy. Novosibirsk., 1961, 273 - 282

TEXT: The authors present the first results in developing a digital multi-channel recording millivoltmeter, for operation in conjunction with thermo-couples and wire tension-gauges. The design data were as follows: 1) The number of parameters measured by one channel - 50. 2) Time of measurement of 50 parameters - 1 sec. 3) Error of the order of 0.2 %. 4) Range - 60 mV. 5) Recording - digital in decimal code. The voltmeter uses the potentiometric method, the compensating voltage being selected in steps which form a three digit binary-decimal code. A multiple high-speed, lamellar type switch, commutates 50 pairs of contacts per second. The null-indi-

Card 1/3

APPROVED FOR RELEASE: 06/05/2000 CIA-RDP86-00513R000101920018-9"

"APPROVED FOR RELEASE: 06/05/2000 CIA-RDP86-00513R000101920018-9

cator consists of an amplifier and output trigger. The null-indicator determines the polarity of the voltage difference between the measured and compensating potentials. The compensating potential is formed by the summation of currents at a compensating resistor R_c. The compensating resistor R_c consists of three sections of 0.9 R_c, 0.09 R_c and 0.01 R_c respectively. Currents of a first group of networks with resistances R, 2R, 2R, 4R flow through the total R_c and form the compensating voltages corresponding to the hundreds of the scale units and so on. All power supplies are stabilized. A control unit performs the following functions: It forms the synchronizing pulses; controls the operation of the compensation potential forming unit, sorts the binary-decimal code of the measured voltage and coverts it into the decimal code only; it controls the operation of the photo-display unit. The photo-display unit consists of photo-luminescent cells displaying the luminescent numbers, 4 mm tall, every cell being supplied from a separate transistor sine-wave generator. The experiment has shown that the requirements of the design can be met in practice. The following Junior Scientific co-workers took part in the design: V.M. Petrov, A.S. Kucherov, N.A.

APPROVED FOR RELEASE: 06/05/2000 CIA-RDP86-00513R000101920018-9"

"APPROVED FOR RELEASE: 06/05/2000 CIA-RDP86-00513R000101920018-9

L 19319-63

45

ACCESSION NR: AR3005859 S/0271/63/000/007/A006/A006

SOURCE: RZh. Avtomatika, telemekhanika i vy*chislitel'naya tekhnika. Abs. 7 A23

AUTHOR: Aref'yev, A. A.

TITLE: A high speed electronic "zero relay"

CITED SOURCE: Tr. In-ta avtomatiki i elektrometrii. Sib. otd. AN SSSR, vy*p. 3, 1962, 77-84

TOPIC TAGS: electronic relay, relay, dc- to ac-converter, zero relay

TRANSLATION: A relay is described which consists of a converter for converting direct current to alternating current, a three-stage amplifier, a phase-sensitive detector, a trigger, and a switching voltage generator. The principles of the relay are described. The following characteristics of the relay are given: when direct current is applied the threshold of sensitivity is 30 microvolts; the input resistance is 2000-3000 ohms, the "zero drift after an hour's interruption is 30-60 microvolts in one hour, the frequency pass band is from 0 to 3000 cps. Power is obtained from a stabilized source connected to a 220-volt alternating current network; voltage fluctuations in the network within limits of ± 5% do not have any

Card 1/2

APPROVED FOR RELEASE: 06/05/2000 CIA-RDP86-00513R000101920018-9"

"APPROVED FOR RELEASE: 06/05/2000 CIA-RDP86-00513R000101920018-9

L 19319-63

ACCESSION NR: AR3005859

0

noticeable effect on the operation of the relay. Characteristics of triggers and inductive windings of the relay are given. Two illustrations. Six references.
P. M.

DATE ACQ: 15Aug63 SUB CODE: GE ENCL: 00

Card 2/2

APPROVED FOR RELEASE: 06/05/2000 CIA-RDP86-00513R000101920018-9"

"APPROVED FOR RELEASE: 06/05/2000 CIA-RDP86-00513R000101920018-9

AREF'YEV, A.A., inzhener-kapitan 1-go ranga zapasa

Using electronic digital computers in solving problems on the unsinkability of a ship. Mor. sbor. 47 no.5:68-78 My '64. (MIRA 18:6)

APPROVED FOR RELEASE: 06/05/2000 CIA-RDP86-00513R000101920018-9"

"APPROVED FOR RELEASE: 06/05/2000 CIA-RDP86-00513R000101920018-9

AREF'YEV, A.A.

Remote switch for strain gauges. Izm.tekh. no.9:18-19 S '65. (MIRA 18:10)

APPROVED FOR RELEASE: 06/05/2000 CIA-RDP86-00513R000101920018-9"

"APPROVED FOR RELEASE: 06/05/2000 CIA-RDP86-00513R000101920018-9

AREF'YEV, A.A., kand.tekhn.nauk, inzh.-kapitan 1-go ranga zapasa

It is useful to acquaint oneself. Mor. sbor. 46 no.10:89-90 O '63. (MIRA 18:12)

APPROVED FOR RELEASE: 06/05/2000 CIA-RDP86-00513R000101920018-9"

"APPROVED FOR RELEASE: 06/05/2000 CIA-RDP86-00513R000101920018-9

FEDOROV, V.S.; RYABCHIKOV, V.R.; POLYAKOV, I.S.; SOROKIN, N.I.; RYABYKH, P.M.; NOVIK, N.G.; SLEPUKHA, T.F.; DRASHKOVSKIY, K.M.; LALABEKOV, S.K.; AREF'YEV, A.P.; YEVSTAF'YEV, V.V.; ZVEREV, A.P.; NERSESOV, L.G.; GROSSMAN, E.I.; BERMAN, A.O.

Petr Aleksandrovich Smirnov, 1902-1958; obituary. Khim. i tekh. topl. i masel. 3 no.12:68 D '58. (MIRA 11:12)
(Smirnov, Petr Aleksandrovich, 1902-1958)

APPROVED FOR RELEASE: 06/05/2000 CIA-RDP86-00513R000101920018-9"

"APPROVED FOR RELEASE: 06/05/2000 CIA-RDP86-00513R000101920018-9

SOV/65-59-4-1/14

AUTHORS: Aref'yev, A.P., Krupitskiy, B.B. and Sorokin, N.I.

TITLE: Development of New Improved Technological Schemes and Reducing Specific Capital Costs in Refining of Petroleum Is the Most Important Problem of the Seven-Year Plan of Development of the Soviet Petroleum Industry (Sozdaniye novykh sovershennykh tekhnologicheskikh skhem i umen'sheniye udel'nykh kapital'nykh zatrat v pererabotku nefti - vazhneyshaya zadacha semiletnego plana razvitiya neftyanoy promyshlennosti SSSR)

PERIODICAL: Khimiya i tekhnologiya topliv i masel, 1959, Nr 4, pp 1-6 (USSR)

ABSTRACT: In accordance with the directives of the Twentieth Party Congress, the Gosudarstvennyy institut po proyektirovaniyu neftepererabatyvayushchikh zavodov (State Institute for Planning Oil Refineries) (Giproneftezavod) jointly with numerous other project and research institutes carried out in 1956 and 1957 major work on revising completely the projects and plans for several petroleum refineries. Plans for small capacity refineries were substituted by plans for larger units, automation has been introduced on an extensive

Card 1/5

APPROVED FOR RELEASE: 06/05/2000 CIA-RDP86-00513R000101920018-9"

"APPROVED FOR RELEASE: 06/05/2000 CIA-RDP86-00513R000101920018-9

SOV/65-59-4-1/14

Development of New Improved Technological Schemes and Reducing Specific Capital Costs in Refining of Petroleum Is the Most Important Problem of the Seven-Year Plan of Development of the Soviet Petroleum Industry

scale and the floor space and the number of required personnel have been greatly reduced compared to previously drawn-up plans. These changed projects provide a good basis for the projects for building new refineries during the 1959/1965 period. Due to the fact that the eastern areas of the Soviet Union possess very large resources of cheap coal, whilst petroleum to these regions has to be transported from the very distant Tataria and Bashkiria, the policy is to use in these regions refinery processes resulting in a minimum production of boiler fuel. On the other hand, in the European part of the Soviet Union and the Urals there is a shortage of coal and the coal costs are high. Therefore, the main aim is to increase the use of oil and gaseous fuels and to use refining processes which yield a high proportion of liquid boiler fuel; this also permits reducing the costs and the time of building

Card 2/5

APPROVED FOR RELEASE: 06/05/2000 CIA-RDP86-00513R000101920018-9"

"APPROVED FOR RELEASE: 06/05/2000 CIA-RDP86-00513R000101920018-9

SOV/65-59-4-1/14

Development of New Improved Technological Schemes and Reducing Specific Capital Costs in Refining of Petroleum Is the Most Important Problem of the Seven Year Plan of Development of the Soviet Petroleum Industry

refineries. Up until recently the optimum size of a refinery was considered to be one with a capacity of 6 million tons/annum. The present views are that the optimum size is considerably larger than this figure. In 1957/58, VNII NP jointly with Giproneftezavod carried out preliminary planning work for refineries of larger unit sizes intended for producing a higher percentage of boiler fuels. Such a refinery is to consist of two or more blocks of the highest unit sizes and it is intended that each refinery will process the entire quantity of raw materials becoming available at each stage of the refining process. Centralised control is to be introduced for the entire technological process, i.e. atmospheric-vacuum distillation and catalytic cracking, catalytic reforming and hydro-purification, gas fractionation, alkylation and polymerisation. The method used in this new plant consists in subjecting the petroleum to stabilisation, dehydration and processing

Card 3/5

APPROVED FOR RELEASE: 06/05/2000 CIA-RDP86-00513R000101920018-9"

"APPROVED FOR RELEASE: 06/05/2000 CIA-RDP86-00513R000101920018-9

SOV/65-59-4-1/14

Development of New Improved Technological Schemes and Reducing Specific Capital Costs in Refining of Petroleum Is the Most Important Problem of the Seven Year Plan of Development of the Soviet Petroleum Industry

it in an atmospheric-vacuum plant (annual capacity 6 million tons). The gasoline distillates are partly used for reforming and partly for the manufacture of kerosine. The 240 to 350°C fraction is utilised in winter and summer diesel fuels. Both types of fuel are desulphurised by hydro-purification but the winter grade is also subjected to de-paraffination. The heavy distillates, obtained by fractional distillation, are further processed. The dried gas is desulphurised and the C_3, C_4 and C_5 stabilised light fractions led into the gas fractionation plant where they are separated into the propane-propylene, butane-butylene and pentane-amylene fractions. The first two fractions are used for polymerisation and alkylation processes. Asphalt and sulphuric acid are also to be produced. A 65% separation of light fractions and 20% separation of boiler fuel and petroleum asphalt will be achieved. The quality of

Card 4/5

APPROVED FOR RELEASE: 06/05/2000 CIA-RDP86-00513R000101920018-9"

"APPROVED FOR RELEASE: 06/05/2000 CIA-RDP86-00513R000101920018-9

SOV/65-59-4-1/14

Development of New Improved Technological Schemes and Reducing Specific Capital Costs in Refining of Petroleum Is the Most Important Problem of the Seven Year Plan of Development of the Soviet Petroleum Industry

gasoline is to be considerably improved, the octane number of the pure gasoline is to be increased to 75-76 (86-87 when adding TEL) and the sulphur content will not exceed 0.1%. The summer diesel fuel will have a sulphur content of 0.72% and a cetane number of 47. The most important modifications of the plants are discussed in detail. The yield of light fractions and boiler fuel, obtained by the proposed process, is compared with yields obtained by American methods. There is 1 table.

Card 5/5

APPROVED FOR RELEASE: 06/05/2000 CIA-RDP86-00513R000101920018-9"

"APPROVED FOR RELEASE: 06/05/2000 CIA-RDP86-00513R000101920018-9

GANCHIKOVA, Anna Yakovlevna; AREF'YEV, A.P., red.; MIGAY, L.S., vedushchiy red.; GANINA, L.V., tekhn.red.

[New technological processes used in the refining of petroleum and natural gas abroad] Novye tekhnologicheskie protsessy pererabotki nefti i gaza za rubezhom. Moskva, Gos.nauchno-tekhn. izd-vo neft. i gorno-toplivnoi lit-ry, 1960. 88 p. (MIRA 14:3)

(Petroleum--Refining)

APPROVED FOR RELEASE: 06/05/2000 CIA-RDP86-00513R000101920018-9"

"APPROVED FOR RELEASE: 06/05/2000 CIA-RDP86-00513R000101920018-9

AREF'YEV, A.S.; KRASAVTSEV, M.A.; STRIGANOV, I.M.

Assembling on the ground and raising trihedral wooden signals. Geod. i kart. no. 11:16-24 N '60. (MIRA 13:12)
(Triangulation signal towers)

APPROVED FOR RELEASE: 06/05/2000 CIA-RDP86-00513R000101920018-9"

"APPROVED FOR RELEASE: 06/05/2000 CIA-RDP86-00513R000101920018-9

AREFYEV, A. V., BAYUKOV, Yu. D., ZAYTSEV, Yu. M., KOZODAYEV, M. S., SUZCHKOV, D. A., OSIPENKOV, V. T., TELENKOV, V. V. FEDOROV, V. B.

"π-π Intergation at Low Energies"

Institute of Theoretical and Experimental Physics, Moscow, USSR

report presented at the Intl. Conference on High Energy Physics, Geneva, 4-11 July 1962

APPROVED FOR RELEASE: 06/05/2000 CIA-RDP86-00513R000101920018-9"

"APPROVED FOR RELEASE: 06/05/2000 CIA-RDP86-00513R000101920018-9

41396

S/089/62/013/004/003/011
B102/B108

24.4730

AUTHORS: Voronkov, R. M., Pevzner, M. I., Flerov, N. N., Aref'yev, A. V., Basalayev, M. I., Korolev, V. M., Moskalev, S. S., Osipov, V. P.

TITLE: 30-Mev linear electron accelerator designed for neutron spectroscopy

PERIODICAL: Atomnaya energiya, v, 13, no. 4, 1962, 327 - 336

TEXT: The accelerator, designed by the Radiotekhnicheskiy institut AN SSSR (Radio Engineering Institute AS USSR) and used for neutron spectroscopy at the Ordena Lenina Institut atomnoy energii im. I. V. Kurchatova AN SSSR (Lenin Order Institute of Atomic Energy imeni I. V. Kurchatov AS USSR), is a traveling-wave accelerator which produces a pulsed electron beam with an energy of 30 Mev and a current of up to 500 ma. It operates on 2764 Mc/sec at a pulse repetition frequency of 100 cps and with pulse durations of 0.6, 0.2, or 0.05 μsec. At the input of the diaphragmed waveguide there is a field of 150 kv/cm. The efficiency of h-f energy conversion is 30-35%. The maximum h-f power for λ = 10.8 cm is 20 Mw. The diaphragmed waveguide

Card 1/6

APPROVED FOR RELEASE: 06/05/2000 CIA-RDP86-00513R000101920018-9"

"APPROVED FOR RELEASE: 06/05/2000 CIA-RDP86-00513R000101920018-9

was designed as a homogeneous system with constant phase velocity (Fig. 2). Each of its six cells has four 4-mm openings to improve the evacuation of the system. The h-f power from the generator is fed to the accelerator through a standard square feeder waveguide (34 by 72 mm, 6 m long) wherein H_{10}-type waves are excited. This waveguide is enclosed on each side by glass windows of circular conical shape. The h-f generator is an unsoldered klystron equipped with a titanium getter and fed by a thyratron modulator. The modulator is fed with direct current from a rectifier with a voltage regulator at its primary winding. Modulator and klystron are connected by a 65-Mw pulse transformer (boost 4.63). The klystron operates at a maximum voltage of 320 kv. Its h-f excitation is made by a magnetron with a power of 10-15 kw. To prevent h-f breakdown in the klystron, its voltage supply is cut off automatically when excess currents amount to 30%, or if an h-f breakdown occurs in the accelerator part. The pulsed injection current is supplied by a three-electrode electron gun designed similarly to Pierce's double-electrode gun (Fig. 6). The vacuum system of the accelerator is connected to three titanium ion getter pumps as designed by the Fiziko-tekhnicheskiy institut AN USSR (Physicotechnical Institute AS UkrSSR). The necessary operating vacuum of $(2-4)\cdot 10^{-6}$ mm Hg can be created

APPROVED FOR RELEASE: 06/05/2000 CIA-RDP86-00513R000101920018-9"

"APPROVED FOR RELEASE: 06/05/2000 CIA-RDP86-00513R000101920018-9

Table 1.

(1) pulse duration, μsec;	0,6		0,2		0,05	
(2) pulse current, ma;	160	250	160	320	160	500
(3) $E_{el,max}$, Mev;	27,5	25,0	31,5	25,0	32,0	29,0
(4) relative neutron yield.	9	10	3,5	6	1	2,5

Fig. 7. Shielding system.
Legend: (1) accelerator; (2) target; (3) experimental channels.

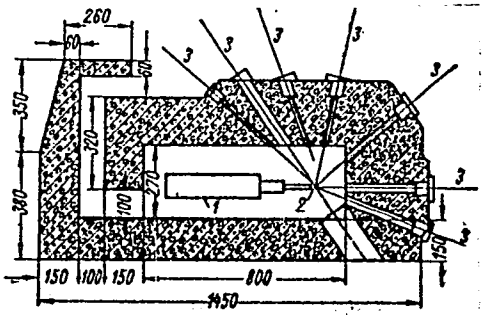

APPROVED FOR RELEASE: 06/05/2000 CIA-RDP86-00513R000101920018-9"

"APPROVED FOR RELEASE: 06/05/2000 CIA-RDP86-00513R000101920018-9

30-Mev linear electron ...

S/089/62/013/004/003/011
B102/B108

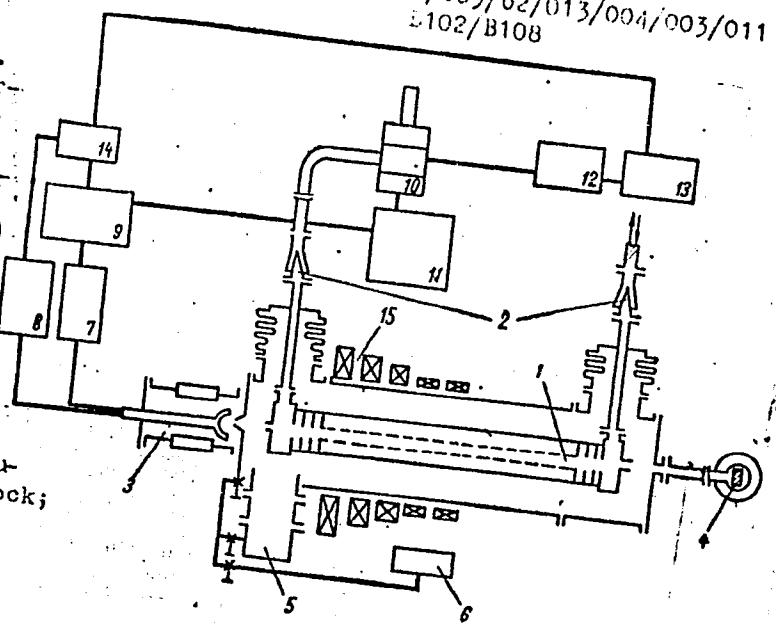

Fig. 1. Block diagram of accelerator. Legend: (1) accelerator tube; (2) waveguide windows; (3) electron gun; (4) target with moderator; (5) titanium pump; (6) forepumps; (7) pulse transformer guns; (8) gun modulator; (9) klystron modulator; (10) klystron; (11) pulse transformer of klystron; (12) magnetron; (13) magnetron modulator; (14) starting block; (15) focusing coils.

Card 5/6

APPROVED FOR RELEASE: 06/05/2000 CIA-RDP86-00513R000101920018-9"

"APPROVED FOR RELEASE: 06/05/2000 CIA-RDP86-00513R000101920018-9

Fig. 6. Electron gun.
Legend: (1) anode, (2) electrode near the cathode; (3) grid; (4) cathode.

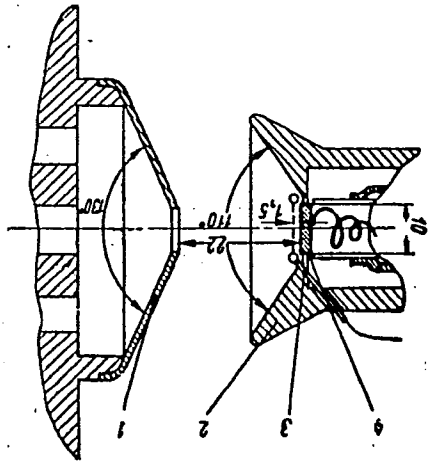

Fig. 2. Diaphragmed waveguide section. b = 27 mm, 2a = 30 mm, a/λ = 0.14, 2b = 86 mm, d = 6.4 mm, overall length 400 mm, wall thickness 7 mm.

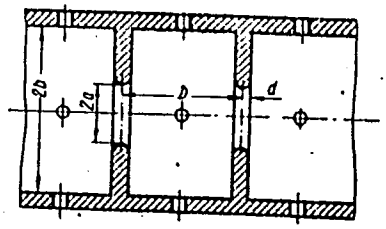

APPROVED FOR RELEASE: 06/05/2000 CIA-RDP86-00513R000101920018-9"

"APPROVED FOR RELEASE: 06/05/2000 CIA-RDP86-00513R000101920018-9

L 2344-66 EWT(1)/EWP(m)
ACCESSION NR: AT5022113

UR/3136/64/000/614/0001/0019

AUTHORS: Flerov, N. N.; Lipatov, V. P.; Aref'yev, A. V.

TITLE: Redesign of a linear electron accelerator of the Institute for Atomic Energy

SOURCE: Moscow. Institut atomnoy energii. /Doklady/, IAE-614, 1964. Rekonstruktsiya lineynogo uskoritelya elektronov Instituta atomnoy energii, 1-19

TOPIC TAGS: linear accelerator, neutron source, electron accelerator, uranium, heavy water moderator, neutron flux, stability, neutron pulse

ABSTRACT: The linear electron accelerator of the Institut atomnoy energii im. Kurchatova (Institute for Atomic Energy) was redesigned. It was originally built in 1960 to serve as a pulsed neutron source for various experiments dealing mainly with time-of-flight neutron spectroscopy. From the time of its installation the performance of the machine left much to be desired. Its neutron flux was too low, and the stability and reliability of the triode injector were unsatisfactory. In the redesigned machine, the neutron flux was increased by a factor of 10, and the stability of the machine was considerably increased. These improvements were realized by: 1) increasing the impulse frequency; 2) exchanging the lead target for a uranium-heavy water moderated target; 3) replacing the KIUIM klystron by an improved version of an Avrora P klystron; 4) stabilizing the power supply to the

Card 1/3

APPROVED FOR RELEASE: 06/05/2000 CIA-RDP86-00513R000101920018-9"

"APPROVED FOR RELEASE: 06/05/2000 CIA-RDP86-00513R000101920018-9

L 2344-66

ACCESSION NR: AT5022113

magnetron modulator; 5) regulating the power supply of the thyratron heaters; 6) controlling the electron trajectory by corrective magnetic fields generated by suitable solenoids distributed along the electron path; 7) redesigning the electron injector. Schematics of the klystron modulator, uranium target, triode injector and impulse injector power supply are on Fig. 1. M. I. Bassalayev and colleagues of the RTI took part in the redesign. Orig. art. has: 8 graphs. 44,55

ASSOCIATION: Institut atomnoy energii im. I. V. Kurchatova (Institute for Atomic Energy)

SUBMITTED: 00 ENCL: 01 SUB CODE: NP

NO REF SOV: 010 OTHER: 002

Card 2/3

APPROVED FOR RELEASE: 06/05/2000 CIA-RDP86-00513R000101920018-9"

"APPROVED FOR RELEASE: 06/05/2000 CIA-RDP86-00513R000101920018-9

L 2344-66

ACCESSION NR: AT5022113

ENCLOSURE: 01

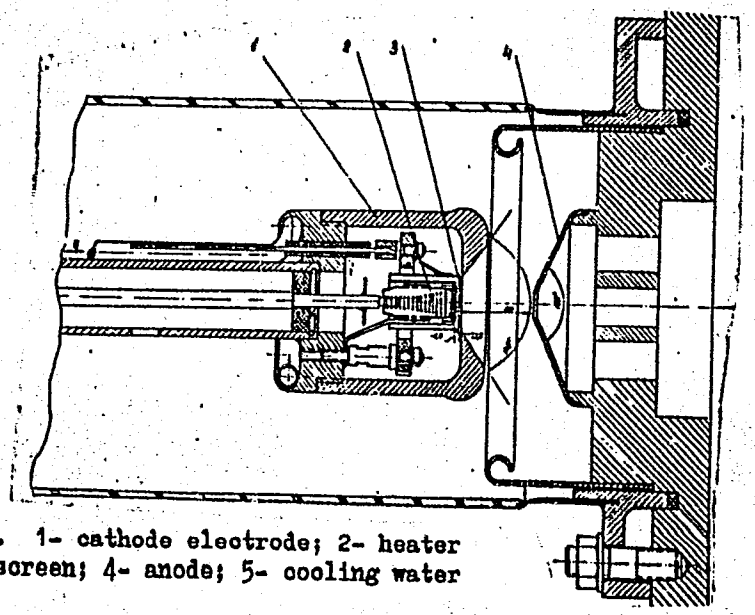

Fig. 1. Triode injector. 1- cathode electrode; 2- heater and cathode of LaB_6; 3- screen; 4- anode; 5- cooling water

Card 3/3

APPROVED FOR RELEASE: 06/05/2000 CIA-RDP86-00513R000101920018-9"

"APPROVED FOR RELEASE: 06/05/2000 CIA-RDP86-00513R000101920018-9

AREF'YEV, B.

Institutes of higher learning and technical progress. Rech. transp. 19 no.12:12-14 D '60. (MIRA 13:12)

1. Direktor Leningradskogo instituta vodnogo transporta.
(Navigation—Research) (Shipbuilding)

APPROVED FOR RELEASE: 06/05/2000 CIA-RDP86-00513R000101920018-9"

"APPROVED FOR RELEASE: 06/05/2000 CIA-RDP86-00513R000101920018-9

AREF'YEV, B.

Communism is our bright future. Rech. transp. 20 no.10: 14-16 O '61. (MIRA 14:9)

1. Rektor Leningradskogo instituta vodnogo transporta.
(Inland water transportation—Employees)
(Adult education)

APPROVED FOR RELEASE: 06/05/2000 CIA-RDP86-00513R000101920018-9"

"APPROVED FOR RELEASE: 06/05/2000 CIA-RDP86-00513R000101920018-9

AREF'YEV, B., dotsent

Contribution of the scientists of the Institute to river transportation. Rech. transp. 24 no.8:5-6 '65. (MIRA 18:9)

1. Rektor Leningradskogo instituta vodnogo transporta.

APPROVED FOR RELEASE: 06/05/2000 CIA-RDP86-00513R000101920018-9"

"APPROVED FOR RELEASE: 06/05/2000 CIA-RDP86-00513R000101920018-9

L 42942-66 EWT(d)/EWT(1)/EWT(m)/EWP(v)/EWP(t)/EWP(k)/EWP(h)/EWP(1)

ACC NR: AP6030144 SOURCE CODE: UR/0120/66/000/004/0138/0140

IJP(c) GG/WW/JD/HW

B

AUTHOR: Aref'yev, A. V.

ORG: Institute for Atomic Energy, GKAE, Moscow (Institut atomnoy energii GKAE)

TITLE: Indium seals in detachable connections of ultrahigh vacuum systems

SOURCE: Pribory i tekhnika eksperimenta, no. 4, 1966, 138-140

TOPIC TAGS: indium, ultrahigh vacuum, vacuum seal, hermetic seal, sealing device

ABSTRACT: A method of sealing the connections in ultrahigh vacuum systems with indium is described in detail. According to this method, indium wire is placed in a groove machined in one of the contacting surfaces. Upon bolting the connection, the wire flattens and fills up the groove, thereby forming a very effective seal which can operate in a vacuum of about $1 \cdot 10^{-8}$ tor. The manual press for extruding indium wire up to 1 mm in diameter is described. Orig. art. has: 4 figures and 2 tables. [TD]

SUB CODE: 11, 13/ SUBM DATE: 23Jul65/ ORIG REF: 004/ ATD PRESS: 5069

Card 1/1 MLP UDC: 621.52

APPROVED FOR RELEASE: 06/05/2000 CIA-RDP86-00513R000101920018-9"

"APPROVED FOR RELEASE: 06/05/2000 CIA-RDP86-00513R000101920018-9

SOV/124-58-11-13486

Translation from: Referativnyy zhurnal, Mekhanika, 1958, Nr 11, p 217 (USSR)

AUTHOR: Aref'yev, ~~B. A.~~

TITLE: An Axisymmetrical Sensor Element for Manometric Instruments (Osesimmetrichnyy chuvstvitel'nyy element manometricheskikh priborov)

PERIODICAL: Tr. Leningr. in-t aviats. priborostr., 1957, Nr 24, pp 3-14

ABSTRACT: Examination of the functioning of a special elastic sensor element for manometric instruments, wherein two twisted circular tubes become untwisted under the action of an internal pressure. The angle of rotation of the end section serves as an indication of the internal pressure. The problem of the determination of the angle of untwisting is solved under the assumption that the change of shape of the cross section is not dependent on the change in the angle of twist. In all analogous problems such an assumption leads to numerical and qualitative errors. At the end of his paper the author points out the inconsistency of his assumption. A further, unsubstantiated attempt is made to apply the results obtained by other authors for Bourdon tubes to the calculation of the element under examination. V. I. Feodos'yev

Card 1/1

APPROVED FOR RELEASE: 06/05/2000 CIA-RDP86-00513R000101920018-9"

"APPROVED FOR RELEASE: 06/05/2000 CIA-RDP86-00513R000101920018-9

SOV/124-59-9-10472

Translation from: Referativnyy zhurnal, Mekhanika, 1959, Nr 9, p 127 (USSR)

AUTHORS: Aref'yev, B.A., Sivokonenko, I.M.

TITLE: On the Resistance to Rolling of a Ball Over a Plane (On "Rolling Friction")

PERIODICAL: Tr. Leningr. in-t aviats. priborostr., 1958, Nr 19, pp 127 - 143

ABSTRACT: A semi-empirical approximate estimate of the resistance force to rolling of a ball over a plane is derived under the presumption, that this resistance is caused by elastic tangential stresses arising as a consequence of cohesion between the ball and the plane over the entire surface of their elastic contact range. A graphic comparison of the experimental results with the calculation by the approximate formula is carried out.

N.A. Rostovtsev

Card 1/1

APPROVED FOR RELEASE: 06/05/2000 CIA-RDP86-00513R000101920018-9"

"APPROVED FOR RELEASE: 06/05/2000 CIA-RDP86-00513R000101920018-9

24(6)

S/146/59/002/06/001/016
D002/D006

AUTHOR: B.A. Aref'yev, Candidate of Physical and Mathematical ~~Sciences, Docent~~

TITLE: The Integral Energy Criterion for Control Systems

PERIODICAL: Izvestiya vysshikh uchebnykh zavedeniy. Priborostroyeniye, 1959, Nr 6, pp 3-11 (USSR)

ABSTRACT: The author shows mathematically that the integral energy criterion used for evaluating the quality of automatic control systems has prospects of value. He uses his own calculation method and some information derived from Y.A. Nikitin [Ref. 2, 3], and refers to L. Silva [Ref. 1, Predictor Servomechanisms, Trans., IRE, v. CT-1, Nr 1,1954]. The article was recommended by the Kafedra avtomatiki i telemekhaniki (Chair of Automatics and Telemechanics). There are 1 graph and 5 references, of which 2 are English and 3

Card 1/2

APPROVED FOR RELEASE: 06/05/2000 CIA-RDP86-00513R000101920018-9"

"APPROVED FOR RELEASE: 06/05/2000 CIA-RDP86-00513R000101920018-9

83461

S/146/60/003/004/001/010
B004/B056

26.3200
17.1204

AUTHOR: Aref'yev, B. A.

TITLE: Natural Oscillations and Dissipation of Energy

PERIODICAL: Izvestiya vysshikh uchebnykh zavedeniy. Priborostroyeniye, 1960, Vol. 3, No. 4, pp. 3-9

TEXT: The author discusses the general postulates of energy conversion in closed and open systems. Proceeding from the Boltzmann equation, he concludes that natural oscillations must correspond to a maximum of energy which flows from the source of energy via the oscillating system into the absorbing medium. According to the rules for solving extremum problems, equations are to be derived, which are necessary for determining the integration constants. This is carried out on the basis of two examples: 1) A tracking relay system with only an inertial, loaded output element, whose motor has a moment of inertia M. $|M|$ = const. The signs of M are nonlinearly changed in such a manner that a rectangular hysteresis loop of the width $2\varphi_0$ is formed (Fig. 1). Equation (1) is written down:

$I\ddot{\varphi} + h\dot{\varphi} = -M$, where I is the moment of inertia of the output, h - the

Card 1/4

APPROVED FOR RELEASE: 06/05/2000 CIA-RDP86-00513R000101920018-9"

"APPROVED FOR RELEASE: 06/05/2000 CIA-RDP86-00513R000101920018-9

83461

Natural Oscillations and Dissipation of Energy S/146/60/003/004/001/010
B004/B056

coefficient of viscous friction, $h\dot{\varphi}$ - the moment of the forces of viscous friction. For each section within the hysteresis loop, the solution of (1) is written down as $\varphi = C + C_1 \exp\left[-(h/I)t\right] - (M/h)t$. The integration constants C and C_1 are determined by searching for the maximum value of the energy dissipated as a result of friction within the half oscillation period T. By transformation of (1), substitution of

$D = h\int_0^T \dot{\varphi}^2 dt$ for the dissipated energy, equation (4) is obtained for D, and C_1 is calculated from (5). From (2) then follows the calculation of C. From (4) and (5) equation (6): $T/h - 2(I/h^2)\mathrm{th}(hT/2I) = 2\varphi_0/M$ then results, from which T may be calculated. The author points out that for $\varphi_0 = 0$ also T = 0 holds, i.e., no natural oscillations occur in the case of lacking hysteresis. The second example deals with a temperature regulator

Card 2/4

APPROVED FOR RELEASE: 06/05/2000 CIA-RDP86-00513R000101920018-9"

"APPROVED FOR RELEASE: 06/05/2000 CIA-RDP86-00513R000101920018-9

83461

Natural Oscillations and Dissipation of Energy S/146/60/003/004/001/010
B004/B056

(Fig. 2). The regulator switches on a heater at the temperature Θ_1 and switches it off at the temperature Θ_2 (Fig. 3). Proceeding from equation (8) $C d\Theta/dt + k\Theta = w$ (C = thermal capacity of the heater, w = the heat conveyed to the heater, $k\Theta$ = the heat transferred to the surrounding medium) and

$D = k \int_0^T \Theta \, dt$, various relations are obtained for Θ and D. On the assumption that D is an extremum, equation (13), e.g., results: $\Theta_1 = \Theta_2 \exp\left[-(k/c)t_1\right]$.. This paper was recommended by the kafedra avtomatiki i telemekhaniki (Chair of Automation and Telemechanics). There are 3 figures and 4 Soviet references.

Card 3/4

APPROVED FOR RELEASE: 06/05/2000 CIA-RDP86-00513R000101920018-9"

"APPROVED FOR RELEASE: 06/05/2000 CIA-RDP86-00513R000101920018-9

83461

Natural Oscillations and Dissipation of Energy S/146/60/003/004/001/010
B004/B056

ASSOCIATION: Leningradskiy institut tochnoy mekhaniki i optiki (Leningrad Institute of Precision Mechanics and Optics)

SUBMITTED: January 9, 1960

Card 4/4

APPROVED FOR RELEASE: 06/05/2000 CIA-RDP86-00513R000101920018-9"

"APPROVED FOR RELEASE: 06/05/2000 CIA-RDP86-00513R000101920018-9

BROYDO, Nataniel' Fomich; AREF'YEV, B.A., red.; FOMICHEV, A.G., red. izd-va; BELOGUROVA, I.A., tekhn. red.

[Dynamic features of the means and system of automating production processes] Dinamicheskie kharakteristiki sredstv i sistem avtomatizatsii proizvodstvennykh protsessov; obzor. Leningrad, 1961. 89 p. (MIRA 15:5)

(Automation)

APPROVED FOR RELEASE: 06/05/2000 CIA-RDP86-00513R000101920018-9"

"APPROVED FOR RELEASE: 06/05/2000 CIA-RDP86-00513R000101920018-9

23557

S/146/61/004/002/010/011
B124/B206

B,2540

AUTHOR: Aref'yev, B. A.

TITLE: Pendulum with additional elastic connection

PERIODICAL: Izvestiya vysshikh uchebnykh zavedeniy. Priborostroyeniye, v. 4, no. 2, 1961, 92-100

TEXT: The author proposes a simple pendulum device permitting a considerable change of the natural oscillation period of the pendulum (Ref. 2: Aref'yev, B. A. Avtorskoye svidetel'stvo No. 124647 (see also Byulleten' izobreteniy. 1959, No. 23)). The extension of the oscillation period is here accompanied by an increase of the sensitivity, which can be of special advantage in automatic circuits. The diagram of the proposed device is shown in Fig. 1. The difference from a normal pendulum consists in the fact that the mass m is suspended on a fixed rod instead of a flexible thread, the rod being fixed to the point of suspension O by hinges, and an elastic connection being used additionally which connects m with the point O_1 which lies on a vertical of O. At an inclination of the base, the operation of the device described differs from a common pendulum (Fig. 2),

Card 1/4

APPROVED FOR RELEASE: 06/05/2000 CIA-RDP86-00513R000101920018-9"

"APPROVED FOR RELEASE: 06/05/2000 CIA-RDP86-00513R000101920018-9

since in the equilibrium the pendulum takes a position which is not identical with the vertical one. With a positive tension of the elastic connection, the angle between pendulum rod and the fixed straight line O_0O in the object, which was previously in a vertical position, is greater than the angle of inclination of the object. The sensitivity of the device intended for determining the inclination is greater if it contains pendula with additional elastic connections, and it may therefore be expected that the proposed scheme will be of greater advantage for use in automatic devices. This study only deals with pendulum motion for a base at rest. It is assumed that the total weight is concentrated in point N (Fig. 1). When calculating the equation of motion, the law of moments is applied for the suspension point O. To the normal moment $Pl \sin\varphi$ (P is the pendulum weight, l the length of rod, and φ the deflection angle of the pendulum rod from the straight line OO_1) the moment must be added that is formed by the elastic connection and is equal to the product of the force of elasticity F and the arm OK (normal line from O on O_1N). All quantities in the equation of motion are expressed by the design parameters l,a (distance of the points O and O_1), coefficient of the elasticity of the connection c, and its initial tension F_0. The derived equation of

APPROVED FOR RELEASE: 06/05/2000 CIA-RDP86-00513R000101920018-9"

"APPROVED FOR RELEASE: 06/05/2000 CIA-RDP86-00513R000101920018-9

motion of the system dealt with is

$$\frac{d^2\varphi}{dt^2} = -\frac{g}{Pl}\left[P - \frac{F_0 - c\left(a + l - \sqrt{a^2 + 2al\cos\varphi + l^2}\right)}{\sqrt{a^2 + 2al\cos\varphi + l^2}}a\right]\sin\varphi. \quad (14)$$

When integrating the equation of motion, the equation

$$T = 2\pi\sqrt{\frac{l}{\left(B - \frac{f}{2}A\right)g}}\left[1 + \left(\frac{1}{2}\right)^2 k^2 + \left(\frac{1\cdot 3}{2\cdot 4}\right)^2 k^4 + \ldots\right], \quad (26)$$

is obtained in first approximation for the oscillation period, where $A = [F_0 - c(a+l)]/Pl\sqrt{a^2 + l^2}$; $B = (P - ca/P)$; $f = a[al/(a^2 + l^2)]$; instead of it the simpler form $T = 2\pi\sqrt{l/[B - (f/2)A]g}$ (27) can also be used. The known initial tension of the elastic connection can be of advantage not only in principle, but also for designing purposes. M. Shuller is mentioned. This study has been recommended by the Department of Automation and Telemechanics. There are 2 figures and 3 Soviet-bloc references.

ASSOCIATION: Leningradskiy institut tochnoy mekhaniki i optiki (Leningrad Institute of Precision Mechanics and Optics)

Card 3/4

APPROVED FOR RELEASE: 06/05/2000 CIA-RDP86-00513R000101920018-9"

"APPROVED FOR RELEASE: 06/05/2000 CIA-RDP86-00513R000101920018-9

AREF'YEV, B.A. [Aref'yev, B.O.] (Leningrad)

Self-oscillations in a relay-type optimalizing control system.
Avtomatyka 7 no.4:42-48 '62. (MIRA 15:8)
(Automatic control)

APPROVED FOR RELEASE: 06/05/2000 CIA-RDP86-00513R000101920018-9"

"APPROVED FOR RELEASE: 06/05/2000 CIA-RDP86-00513R000101920018-9

40960

S/102/62/000/004/004/006
D201/D308

16.8000

AUTHOR: Aref'yev, B. O. (Leningrad)

TITLE: Free oscillations in an extremum relay system

PERIODICAL: Avtomatyka, no. 4, 1962, 42-48

TEXT: The author gives a method for determining the parameters of free oscillations in an extremum relay control system consisting of a constant-speed servomotor and of a first order inertial object; the final result is obtained for controllers with the property of "storing the extremum"; most of the intermediate formulas can be applied to sensitivity controlled systems. The method is based on the analysis of the exact solution of differential equation of the first order describing the motion of the controlled object, using a graph of the solution in generalized coordinates. The graph makes it possible to determine the parameters proportional to the x-axes of points corresponding to maximum and minimum deviation from its optimum value of the

Card 1/2

APPROVED FOR RELEASE: 06/05/2000 CIA-RDP86-00513R000101920018-9"