"APPROVED FOR RELEASE: 06/06/2000 CIA-RDP86-00513R000103010008-8

S/078/61/006/003/004/022
B121/B208

AUTHORS: Kovalenko, P. N., Bagdasarov, K. N.

TITLE: Determination of the solubility of zirconium hydroxide

PERIODICAL: Zhurnal neorganicheskoy khimii, v. 6, no. 3, 1961, 534-538

TEXT: It was the objective of the paper to determine the pH of the beginning dissolution and the solubility product of zirconium hydroxide, as well as the pH of its beginning precipitation. The zirconium concentration in the saturated hydroxide solution was determined with an ФЭК-М (FEK-M) colorimetric photometer. The "stilbazo" complex was used for the colorimetric determination of zirconium. A slight dissolution of $Zr(OH)_4$ was found to set in at pH = 1.9, which increases at pH = 1.8; at lower pH values, an intense dissolution of zirconium hydroxide occurs. A pH value of 1.8 was determined for the beginning precipitation of zirconium hydroxide, and pH = 1.9 for the end. These data contradict those published on the precipitation of zirconium hydroxide. The solubility of zirconium hydroxide in concentrated alkali lye was studied, and the value

Card 1/2

APPROVED FOR RELEASE: 06/06/2000 CIA-RDP86-00513R000103010008-8"

"APPROVED FOR RELEASE: 06/06/2000 CIA-RDP86-00513R000103010008-8

$1.1 \cdot 10^{-54}$ was obtained for the activity product. The influence of the ionic strength of a sodium nitrate solution upon the solubility of zirconium hydroxide was studied, and the pH of the beginning dissolution ($pH_{b.d.}$) of freshly precipitated zirconium hydroxide in the presence of sodium nitrate was found to be a linear function of its ionic strength, which is expressed by the following equation: $pH_{b.d.} = pH_o - K \cdot c_{NaNO_3}$, where pH_o is the pH of the beginning dissolution of $Zr(OH)_4$ at an ionic strength of $\mu = 0$. In this case, $pH_o = 1.83$. K is a constant with a value of 0.174. There are 3 figures, 2 tables, and 17 references: 13 Soviet-bloc and 3 non-Soviet-bloc.

ASSOCIATION: Rostovskiy-na-Donu gosudarstvennyy universitet (Rostov-na-Donu State University)

SUBMITTED: December 28, 1959

Card 2/2

APPROVED FOR RELEASE: 06/06/2000 CIA-RDP86-00513R000103010008-8"

"APPROVED FOR RELEASE: 06/06/2000 CIA-RDP86-00513R000103010008-8

S/081/61/000/022/016/076
B102/B108

AUTHORS: Kovalenko, P. N., Bagdasarov, K. N., Byzova, R. P.

TITLE: Electrolytic separation of bismuth from small quantities of lead and cobalt, cadmium and zinc, and the polarographic determination of microimpurities

PERIODICAL: Referativnyy zhurnal. Khimiya, no. 22, 1961, 108-109, abstract 22D39 (Sb. "Fiz.-khim. metody analiza i kontrolya proiz-va", Rostov-na-Donu, Rostovsk. un-t, 1961, 33-41)

TEXT: The conditions of electrodeposition of Bi from nitric-acid solutions containing glucose on a Cu-coated Pt cathode are investigated. The effects of acidity of the solution and of temperature on the rate of electrodeposition of Bi at constant cathode potential, and on the quality of the deposit are shown. A combined electrochemical method of determining microquantities of Pb and Co, Cd and Zn in electrolytic Bi solutions has been worked out. In electrolysis with nitric-acid solutions Bi is deposited quantitatively. the metal impurities are determined polarographically upon a background of 0.5M KSCN solution. [Abstracter's

Card 1/2

APPROVED FOR RELEASE: 06/06/2000 CIA-RDP86-00513R000103010008-8"

"APPROVED FOR RELEASE: 06/06/2000 CIA-RDP86-00513R000103010008-8

Electrolytic separation of bismuth...

S/081/61/000/022/016/076
B102/B108

note: Complete translation.]

Card 2/2

APPROVED FOR RELEASE: 06/06/2000 CIA-RDP86-00513R000103010008-8"

"APPROVED FOR RELEASE: 06/06/2000 CIA-RDP86-00513R000103010008-8

S/137/61/000/012/149/149
A006/A101

AUTHORS: Bagdasarov, K. N., Kovalenko, P. N., Altanskaya, Z. Ya.

TITLE: The photocolorimetric method of determining tantalum with the aid of pyrocatechin

PERIODICAL: Referativnyy zhurnal, Metallurgiya, no. 12, 1961, 15, abstract 12K83 (V sb. "Fiz.-khim. metody analiza i kontrolya proiz-va" Rostov-na-Donu, Rostovsk. un-t, 1961, 143-150)

TEXT: The authors studied some optical characteristics of a colored Ta compound with pyrocatechin (I). It was found that the color of the solution became stable within 20 minutes after I has been added and remains constant for about 1.5 hours. The dependence of the optical density on pH has the shape like a curve of complex compounds formed by metals with anions of weak acids. The solution color attains maximum intensity at pH 3.12. Maximum optical density of the solution is attained when 3 ml of 10% solution I are added (total volume 25 ml, Ta concentration in the solution $4.77 \cdot 10^{-5}$ g-ion/l, $C_2O_4^{2-}$ concentration - $6.8 \cdot 10^{-2}$ g-ion/l) i.e. a concentration of $1.1 \cdot 10^{-1}$ g-mol/l. The following optimum conditions are given for the photocolorimetric determination of Ta with

Card 1/2

APPROVED FOR RELEASE: 06/06/2000 CIA-RDP86-00513R000103010008-8"

"APPROVED FOR RELEASE: 06/06/2000 CIA-RDP86-00513R000103010008-8

the aid of I: Into a 25 ml retort containing a Ta-solution, 5 ml of oxalate buffer solution (118 g $H_2C_2O_4$ and 19.84 g $(NH_4)_2C_2O_4$ per 1 g water) and 5 ml 10% solution of I, containing 4% CH_3COOH, are added. The retort content is filled up to the mark; pH is 2.5 ± 0.25. The optical density of the solution is measured 20 minutes after its preparation. The Ta content is determined by the method of a calibration graph. The authors calculated the molar extinction factor of the colored solution and the limits of Ta concentration, determined with the aid of the described method ($1.8 \cdot 10^{-5} - 9.0 \cdot 10^{-4}$ g-ion/l).

N. Vorob'yeva

[Abstracter's note: Complete translation]

APPROVED FOR RELEASE: 06/06/2000 CIA-RDP86-00513R000103010008-8"

"APPROVED FOR RELEASE: 06/06/2000 CIA-RDP86-00513R000103010008-8

KOVALENKO, P.N.; BAGDASAROV, K.N.; OSIPOV, O.A., dots., otv. red.; SHKORINOV, V.P., red.; PAVLICHENKO, M.I., tekhn. red.

[Physicochemical methods of analysis; practical handbook] Fiziko-khimicheskie metody analiza; prakticheskoe rukovodstvo. Rostov-na-Donu, Izd-vo Rostovskogo univ., 1962. 349 p. (MIRA 15:6)
(Chemistry, Analytical) (Electrochemical analysis)

APPROVED FOR RELEASE: 06/06/2000 CIA-RDP86-00513R000103010008-8"

"APPROVED FOR RELEASE: 06/06/2000 CIA-RDP86-00513R000103010008-8

S/078/62/007/004/002/016
B110/B101

AUTHORS: Kovalenko, P. N., Bagdasarov, K. N.

TITLE: Determination of the pH at the beginning of dissolution and of the activity product of gadolinium hydroxide

PERIODICAL: Zhurnal neorganicheskoy khimii, v. 7, no. 4, 1962, 739-742

TEXT: The pH at the beginning dissolution of $Gd(OH)_3$ was determined photocolorimetrically, and the activity product was calculated therefrom. The determination was carried out with alizarin S in acetate buffer solution. The dependence of light absorption was directly proportional to the Gd concentration. The alizarin complex (Gd:alizarin S = 1:1) had a molar absorption coefficient of $6.05 \cdot 10^3$. The hydroxide was precipitated from a nitrous gadolinium solution at 60-70°C by 25% ammonia solution. On the basis of the optical density of the solutions, it was detected that equilibrium between liquid and solid phase of the hydroxide sets in only after 20-24 hrs. Freshly precipitated gadolinium hydroxide was left for 24 hrs with distilled water of known pH and filtered off; the Gd concentration was colorimetrically determined in the filtrate. At pH = 6.78,

Card 1/3

APPROVED FOR RELEASE: 06/06/2000 CIA-RDP86-00513R000103010008-8"

"APPROVED FOR RELEASE: 06/06/2000 CIA-RDP86-00513R000103010008-8

hardly perceptible dissolution of the hydroxide precipitate begins, which gradually increases up to pH = 6.70. Then the Gd concentration rises steeply and between pH = 6.78 and 6.70 actual dissolution of the hydroxide takes place. The Gd^{3+} concentration is zero at pH = 6.78. The dissolution of $Gd(OH)_3$ sets in intensively only at pH = 6.70. The solubility product (SP) is calculated for the Gd^{3+} concentration at pH = 6.25-6.65, since no basic salts are formed in this range. It was found that $-\log SP = a + b \cdot c_{Gd^{3+}}$, where a = constant = negative logarithm of the solubility product for the activity coefficient 1 ($-\log Pa$); $b = \tan \alpha = (-\log SP + \log Pa)/c_{Gd^{3+}} = 0.078$, if the Gd^{3+} concentration is expressed in mg-ion/liter. The following data were graphically determined: $-\log Pa = 26.95$, $Pa = 1.124 \cdot 10^{-27}$ (20°C) and the solubility $S = 1.83 \cdot 10^{-7}$ g-ion/liter. Foreign electrolytes influence the $Gd(OH)_3$ solubility and shift the pH of beginning dissolution toward the alkaline range. Presence of 0.2 N KNO_3 shifts the pH from 6.70 to 7.12 and increases the solubility product to $3.05 \cdot 10^{-26}$. $Gd(OH)_3$ solubility gradually increases with increasing KNO_3 concentration. There are 4 figures and 1 table.

APPROVED FOR RELEASE: 06/06/2000 CIA-RDP86-00513R000103010008-8"

"APPROVED FOR RELEASE: 06/06/2000 CIA-RDP86-00513R000103010008-8

Determination of the pH ... S/078/62/007/004/002/016
B110/B101

ASSOCIATION: Rostovskiy-na-Donu gosudarstvennyy universitet (Rostov-na-Donu State University)

SUBMITTED: May 4, 1961

Card 3/3

APPROVED FOR RELEASE: 06/06/2000 CIA-RDP86-00513R000103010008-8"

"APPROVED FOR RELEASE: 06/06/2000 CIA-RDP86-00513R000103010008-8

S/078/62/007/008/001/008
B179/B101

AUTHORS: Kovalenko, P. N., Bagdasarov, K. N.

TITLE: Photocolorimetric determination of the pH at which hafnium hydroxide dissolution sets in, and calculation of the activity product

PERIODICAL: Zhurnal neorganicheskoy khimii, v. 7, no. 8, 1962, 1765-1768

TEXT: The determination was made with the Hf^{4+} stilbazo complex (Hf : stilbazo ratio = 1 : 2), since the beginning and the end of precipitation of some hydroxides (e. g., Zr, Gd, Hf).cannot be determined polarographically. The color of the complex is stabilized by brief heating to 60 - 70°C. Optimum condition for the colorimetric determination: 536 - 584 or 545 - 550 mμ at pH = 2. The molar extinction coefficient is $1.45 \cdot 10^4$. Equilibrium between the solid and liquid phases ($Hf(OH)_4$ precipitate and Hf salt solution) occurred after 16 hrs at 20°C. Freshly precipitated $Hf(OH)_4$ was added to solutions of different pH and the

Card 1/2

APPROVED FOR RELEASE: 06/06/2000 CIA-RDP86-00513R000103010008-8"

"APPROVED FOR RELEASE: 06/06/2000 CIA-RDP86-00513R000103010008-8

amount of dissolved Hf^{4+} determined. Results: (1) Noticeable dissolution of Hf at pH = 2.20 - 2.25. (2) The number of hydroxyl groups was calculated from the diagram - log $c_{Hf^{4+}}$ versus pH and found to be $n \cong 3.88$. (3) Experiments showed $Hf(OH)_4$ to form during the hydrolysis of hafnium nitrate at pH = 1.8 - 2.20. (4) The function -log SP = $f(c_{Hf})$, where SP is the solubility product, showed the activity product to be $3.7 \cdot 10^{-55}$.

SUBMITTED: June 8, 1961

APPROVED FOR RELEASE: 06/06/2000 CIA-RDP86-00513R000103010008-8"

"APPROVED FOR RELEASE: 06/06/2000 CIA-RDP86-00513R000103010008-8

KOVALENKO, P.N.; BAGDASAROV, K.N.

Colorimetric method for determining the pH of the beginning of dissolution and the activity product of samarium hydroxide. Zhur. neorg. khim. 7 no.8:1769-1772 Ag '62. (MIRA 16:6)

(Samarium hydroxide)
(Hydrogen-ion concentration)

APPROVED FOR RELEASE: 06/06/2000 CIA-RDP86-00513R000103010008-8"

"APPROVED FOR RELEASE: 06/06/2000 CIA-RDP86-00513R000103010008-8

ACCESSION NR: AR4015653 S/0081/63/000/021/0094/0094

SOURCE: RZh. Khimiya, Abs. 21G47

AUTHOR: Kovalenko, N. P.; Shchemeleva, G. G.; Bagdasarov, K. N.; Starodubskaya, A. A.

TITLE: Electrolytic separation of lead and uranyl, and the subsequent photocolorimetric determination of uranyl

CITED SOURCE: Sb. Elektrokhim. i optich. metody* analiza. Rostov-na-Donu, Rostovsk. un-t, 1963, 153-159

TOPIC TAGS: lead, uranyl, electrolytic lead separation, electrolytic uranyl separation, photometric analysis, photometric uranyl determination

ABSTRACT: It was established that UO_2^{2+} can be separated quantitatively from 2500 times the amount of Pb^{2+} by electrodeposition of Pb from a hydrochloric acid solution, containing NH_2OH, on a copperplated Pt cathode (75-80C, 2 amps, 2 v). The determination of UO_2^{2+} is completed photometrically, using an arsenazo dye. It was shown that UO_2^{2+} forms a colored compound (1:1) with the latter with a peak light absorption at 584 mμ (molecular absorption coefficient $1.9 \cdot 10^4$). The color intensity of the compound is maximal at pH 4.4-7.0. The color develops

Card 1/2

APPROVED FOR RELEASE: 06/06/2000 CIA-RDP86-00513R000103010008-8"

"APPROVED FOR RELEASE: 06/06/2000 CIA-RDP86-00513R000103010008-8

ACCESSION NR: AR4015653

instantly and does not vary over the course of an hour. The color intensity drops as the temperature increases, Beer's law being observed at UO_2^{2+} concentrations of 0.2-2.4 γ/ml. Zn, SO_4^{2-}, NO_3^- and Cl^- do not interfere with the photometric determination described, using arsenazo, while Fe^{3+}, Cu^{2+}, Sb^{3+}, Pb^{2+}, Bi^{3+}, citrate, tartrate and NH_2OH do interfere. To determine Pb and UO_2^{2+} when both are present, 120 ml of the solution to be analyzed (containing 5 ml of concentrated HCl and 2 g of $NH_2OH \cdot HCL$) is heated to 75-80C and subjected to electrolysis while stirring. The current intensity is increased gradually from 1.4 to 2 amps and the voltage from 1.4 to 2 v. The electrolysis lasts 50 minutes. After separation is complete, the cathode with the precipitate of Pb is rinsed first in running water, then in alcohol and ethyl ether, and finally dried and suspended. The electrolyte is evaporated to a concentration of about 60 ml, 18 ml of 4 N KOH are added, and the solution is cooled and diluted to 100 ml. Ten ml of the resulting solution are again treated with 3 ml of a 25% solution of urotropin and 2.5 ml of a 0.02% solution of arsenazo, then heated for 3-5 minutes over a boiling water bath, cooled, diluted with water to a volume of 50 ml and measured photometrically with an orange filter in 3 cm cuvettes. The error in determining 10-100 γ UO_2^{2+} and 100-250 mg Pb in 50 ml of solution was 2%. The analysis takes 2.5-3 hours. N. Chudinova

DATE ACQ: 09Dec63 SUB CODE: CH ENCL: 00

Card2/2

APPROVED FOR RELEASE: 06/06/2000 CIA-RDP86-00513R000103010008-8"

"APPROVED FOR RELEASE: 06/06/2000 CIA-RDP86-00513R000103010008-8

ACCESSION NR: AR 4015683 S/0081/63/000/023/0125/0125

SOURCE: RZh. Khimiya, Abs. 23G44

AUTHOR: Tatayev, O. A.; Bagdasarov, K. N.

TITLE: Photocolorimetric determination of praseodymium by means of quinalizarin

CITED SOURCE: Sb. Elektrokhim. i optich. metody* analiza. Rostov-na-Donu, Rostovsk. un-t, 1963, 212-216

TOPIC TAGS: colorimetry, rare earth, quantitative analysis, praseodymium, quinalizarin, praseodymium complex

ABSTRACT: The formation of complexes between Pr and quinalizarin was investigated and it was found that the colored complex has a maximum intensity at pH 7; at pH 8-11, the optical density remains constant, but is only two thirds of that at pH 7, while at pH 1-6.5 no color develops. The maximum absorption of the complex is at 584 mμ at pH 7 and 658 mμ at pH 8-10. The color reaches maximum intensity 5 minutes after mixing of the reagents and remains constant for one hour. Beer's law is followed. The method is suitable for the determination of Pr at concentrations of 1.25×10^{-6} - 3.75×10^{-5} g.ions/liter at pH 7 and 1.25×10^{-6} - 6.3×10^{-5} g.ions/liter at pH 9. The molecular absorption coefficient is 9600 at pH 7 and 5610 at pH 9.

Card 1/2

APPROVED FOR RELEASE: 06/06/2000 CIA-RDP86-00513R000103010008-8"

"APPROVED FOR RELEASE: 06/06/2000 CIA-RDP86-00513R000103010008-8

ACCESSION NR: AR4015683

By the methods of ismolmar series and constant concentration, it has been shown that Pr and quinalizarin are present in the complex in the ratio 1:2. The instability constant of the complex is 3.02×10^{-12}. In order to determine Pr, the solution to be analyzed is mixed with 15-20 ml of water, 8 ml of buffer solution at pH 7 (5.5 ml of 5% urotropin plus 2.5 ml of 4% H_3BO_3) and 5 ml of a 0.02% solution of quinalizarin in methanol, diluted with water to 50 ml and measured in 2-cm cuvettes using a reagent blank. If the determination is carried out at pH 9, the solution to be analyzed is mixed with 20-25 ml of water, the solution of quinalizarin, acetate buffer at pH 6 and 1 ml of 1 N NaOH, and diluted with water to 50 ml. L. Guzeyeva

DATE ACQ: 09Jan64 SUB CODE: IC ENCL: 00

Card 2/2

APPROVED FOR RELEASE: 06/06/2000 CIA-RDP86-00513R000103010008-8"

"APPROVED FOR RELEASE: 06/06/2000 CIA-RDP86-00513R000103010008-8

L 10097-63 EPR/EWP(j)/EPF(c)/EWP(q)/EWT(m)/BDS/ES(s)-2 AFFTC/ASD/SSD Ps-4/Pr-4/Pc-4/Pt-4 RM/WW/JD/WH/RH/MAY

ACCESSION NR: AP3002404 S/0153/63/006/002/0346/0348

AUTHOR: Kovalenko, P. N.; Bagdasarov, K. N.

TITLE: Scientific conference of workers and scientists in the metallurgical and chemical industries and of VUZ scientific workers [Rostov-on-Don, 19-23 November 1963]

SOURCE: IVUZ. Khimiya i khimicheskaya tekhnologiya, v. 6, no. 2, 1963, 346-348

TOPIC TAGS: chemical analysis of metals, titrimetry, spectrophotometry, trace impurities, amperometric titration, titration in nonaqueous solutions, graphite microelectrode

ABSTRACT: New methods in chemical engineering and production control were discussed. Reports on the use of new electrolytes for electroplating, anticorrosive plastic coatings, and the production of corrosion-resistant chemical equipment were delivered by Ye. Ye. Kravtsov (Luganskiy sel'skokhozyaystvenny*y institut [Lugansk Agricultural Institute]), M. M. Yevstifeyev (Rostovskiy universitet [Rostov University]), I. P. Kharlamov (ENIMS), A. A. Ageyeva (Rostovskiy Sovnarkhoz [Rostov Council of National Economy]), and Ye. T. Zarechenskiy (Novocherkasskiy elektrodnyy zavod [Novocherkassk Electrode Plant]).

Card 1/2

APPROVED FOR RELEASE: 06/06/2000 CIA-RDP86-00513R000103010008-8"

"APPROVED FOR RELEASE: 06/06/2000 CIA-RDP86-00513R000103010008-8

L 10097-63
ACCESSION NR: AP3002404

P. N. Kovalenko (Rostov University) spoke on combined electrolytic and chemical analysis of metals, pointing out that the combination of electrolysis (using solid electrodes to separate the principal component) with polarographic, photometric, or spectroscopic determination of trace impurities permits a rapid and highly accurate analysis from single samples of materials of complex composition. V. N. Lenskaya, R. K. Terekhovaya, and I. S. Mustafina (Saratovskiy universitet [Saratov University]) discussed amperometric titration with a graphite microelectrode, which is considered more sensitive than the platinum microelectrodes now used since hydrogen overvoltage on the graphite microelectrode is much higher. Representatives of the Moskovskiy khimiko-tekhnologicheskiy institut im. Mendeleyeva (Moscow Institute of Chemical Engineering) discussed the titration in nonaqueous solutions being studied by A. P. Kreshkov, a method which permits volumetric, photometric, and potentiometric titration of various substances. Z. S. Mukhina (VIAM) described the application of organic coprecipitants, extraction, and various physicochemical methods of measurement in determining trace impurities in raw materials and heat-resistant alloys. A. A. Fedorov (TsNIIchermet) reported on a new method of determining trace quantities of phosphorus by means of a collector in a nitrate solution. V. I. Ganopol'skiy and V. F. Barkovskiy (Ural'skiy universitet [Ural University]) spoke on the use of differential spectrophotometry for the determination of praseodymium, neodymium samarium, and cobalt in steel.

Card 2/3

APPROVED FOR RELEASE: 06/06/2000 CIA-RDP86-00513R000103010008-8"

"APPROVED FOR RELEASE: 06/06/2000 CIA-RDP86-00513R000103010008-8

KOVALENKO, P.N.; BAGDASAROV, K.N.

Determination of pH of the beginning of dissolution and precipitation of scandium hydroxide by means of a photocolorimeter. Izv.vys.ucheb.zav.; khim.i khim.tekh. 6 no.4:540-552 '63. (MIRA 17:2)

1. Rostovskiy-na-Donu gosudarstvennyy universitet. Kafedra analiticheskoy khimii.

APPROVED FOR RELEASE: 06/06/2000 CIA-RDP86-00513R000103010008-8"

"APPROVED FOR RELEASE: 06/06/2000 CIA-RDP86-00513R000103010008-8

KOVALENKO, P.N.; BAGDASAROV, K.N.

Conference on advanced methods of chemical technology and production control. Zav.lab. 29 no.4:511-512 '63. (MIRA 16:5)

1. Rostovskiy gosudarstvennyy universitet.
(Metallurgical analysis--Congresses)

APPROVED FOR RELEASE: 06/06/2000 CIA-RDP86-00513R000103010008-8"

"APPROVED FOR RELEASE: 06/06/2000 CIA-RDP86-00513R000103010008-8

BAGDASAROV, K.N.

BAGDASAROV, K.N.; YEVSTIFEYEV, M.M.

"Rapid methods of the analysis of electrolytes in galvanic baths" by A.A. Popel'. Reviewed by K.N. Bagdasarov, M.M. Evstifeev. Zav. lab. 29 no.6:768 '63. (MIRA 16:6)

1. Rostovskiy gosudarstvennyy universitet.
(Electrochemical analysis)

APPROVED FOR RELEASE: 06/06/2000 CIA-RDP86-00513R000103010008-8"

"APPROVED FOR RELEASE: 06/06/2000 CIA-RDP86-00513R000103010008-8

ZHDANOV, Yu.A.; SHELEPIN, O.Ye.; BAGDASAROV, K.N.; BUDNYATSKAYA, N.I.

Study of the indicator properties of 2-oxy-peri-naphthindenone. Dokl. AN SSSR 153 no.5:1073-1076 D '63. (MIRA 17:1)

1. Rostovskiy-na-Donu gosudarstvennyy universitet. Predstavleno akademikom A.P. Vinogradovym.

APPROVED FOR RELEASE: 06/06/2000 CIA-RDP86-00513R000103010008-8"

"APPROVED FOR RELEASE: 06/06/2000 CIA-RDP86-00513R000103010008-8

BAGDASAROV, K.N.; KOVALENKO, P.N.; IVAKHNENKO, P.K.

Photocolorimetric determination of nitrites. Izv. vys. ucheb. zav., khim i khim. tekh. 7 no.5:736-741 '64 (MIRA 18:1)

1. Kafedra analiticheskoy khimii Rostovskogo-na-Donu gosudarstvennogo universiteta.

APPROVED FOR RELEASE: 06/06/2000 CIA-RDP86-00513R000103010008-8"

"APPROVED FOR RELEASE: 06/06/2000 CIA-RDP86-00513R000103010008-8

ACCESSION NR: AP4019485 S/0078/64/009/003/0534/0537

AUTHOR: Kovalenko, P. N.; Bagdasarov, K. N.

TITLE: Solubility product of lanthanum hydroxide

SOURCE: Zhurnal neorg. khimii, v. 9, no. 3, 1964, 534-537

TOPIC TAGS: lanthanum hydroxide, solubility product, solution, lanthanum alizarin, S complex, molar extinction coefficient, extinction, light absorption, photometric determination

ABSTRACT: The dissolution of lanthanum hydroxide was investigated to determine the pH at the start of dissolution under equilibrium conditions. The precipitation of $La(OH)_3$, its solubility product and the physical-chemical characteristics of the colored complex compound of alizarin S and lanthanum were studied. The molar coefficient of extinction of the colored solutions at $\lambda = 536$ millimicrons is 6000. It was found that light absorption is a straight line function of the lanthanum concentration; and $La(OH)_3$ reaches an equilibrium in solution in 20-24 hours. During the investigation $La(OH)_3$ was freshly acidified with HNO_3 to the determined pH, allowed to stand for 24 hours to attain equilibrium, filtered, the

Card 1/2

APPROVED FOR RELEASE: 06/06/2000 CIA-RDP86-00513R000103010008-8"

"APPROVED FOR RELEASE: 06/06/2000 CIA-RDP86-00513R000103010008-8

ACCESSION NR: AP4019485

pH of the filtrate measured, and the concentration of the lanthanum in solution above the $La(OH)_3$ precipitate was determined photometrically by complexing the lanthanum with alizarin S. A reciprocal logarithmic relationship exists between the La concentration and the pH of the solution in equilibrium with the solid. The reciprocal log. of the activity product is 27.707, and the activity product is 1.96×10^{-28}. Orig. art. has: 4 figures, 1 table and 2 equations.

ASSOCIATION: Rostovskiy-na-Donu gosudarstvennyy universitet (Rostov-on-Don State University)

SUBMITTED: 20Sep62 DATE ACQ: 31Mar64 ENCL: 00

SUB CODE: CH NO REF SOV: 011 OTHER: 001

Card 2/2

APPROVED FOR RELEASE: 06/06/2000 CIA-RDP86-00513R000103010008-8"

"APPROVED FOR RELEASE: 06/06/2000 CIA-RDP86-00513R000103010008-8

GONCHAROVA, N.I.; KOVALENKO, P.N.; BAGDASAROV, K.N.

Microstructure of cadmium and the conditions for its determination by electrolysis. Zhur. anal. khim. 19 no.6:671-676 '64.

(MIRA 18:3)

1. Rostovskiy-na-Donu gosudarstvennyy universitet.

APPROVED FOR RELEASE: 06/06/2000 CIA-RDP86-00513R000103010008-8"

"APPROVED FOR RELEASE: 06/06/2000 CIA-RDP86-00513R000103010008-8

L 14527-65 EWT(m)/EWP(j) AEDC(b) RM
ACCESSION NR: AP5001432 S/0075/64/019/008/1043/1044

AUTHOR: Kovalenko, P. N.; Bagdasarov, K. N.

TITLE: Inter-university conference on analytical and physiochemical properties of complex compounds of the rare and nonferrous metals

SOURCE: Zhurnal analiticheskoy khimii, v. 19, no. 8, 1964, 1043-1044

TOPIC TAGS: physiochemical property, rare metal compound, nonferrous metal compound, analytic chemistry, scientific conference

Abstract: The article details the results of a Conference held from 27 to 30 January 1964 at Rostov-on-Don by the Ministry of Higher and Intermediate Special Education RSFSR, Rostov State University, and the Rostov Departmentt of the All-Union Chemical Society imeni D. I. Mendeleyev. More than 160 reports were presented by the more than 300 participants in the Conference. General problems of analytical chemists and physical chemists were discussed; the participants exchanged information on the work of various schools and trends in the field of investigation of the physicochemical properties of

Card 1/3

APPROVED FOR RELEASE: 06/06/2000 CIA-RDP86-00513R000103010008-8"

"APPROVED FOR RELEASE: 06/06/2000 CIA-RDP86-00513R000103010008-8

L 14527-65
ACCESSION NR: AP5001432

compounds of rare and nonferrous metals, the chemical mechanisms of reactions, the composition and structures of the compounds formed, and the use of these compounds for practical, analytical purposes, on the basis of theoretical data. Reports included a summary of a study of the properties of complex compounds of the nonferrous and rare metals with certain organic compounds by electrochemical and optical methods; the practical application of the compounds studied; dipole moments and structure of internal complex compounds; a new method for determining the composition and constants of the formationn both of simple mononuclear and of mixed and polynuclear complexes for the oxidized and reduced forms of the substance. More than 30 reports were presented at the Section of Electrochemical Methods of Investigation. Other Sections dealt with optical methods of analysis and chemical methods of investigation. The resolution adopted by the Conference notes a number of shortcomings retarding research work and the introduction of its results into practice; insufficient coordination of scientific research work in the field of analytical chemistry of the rare elements; unsatisfactory equipment of research laboratories with modern apparatus and reagents; insufficient publication of research results. The Conference outlined measures for strengthen-

Card 2/3

APPROVED FOR RELEASE: 06/06/2000 CIA-RDP86-00513R000103010008-8"

"APPROVED FOR RELEASE: 06/06/2000 CIA-RDP86-00513R000103010008-8

L 14527-65

ACCESSION NR: AP5001432

ing the relationship of science and production and intensifying research in the study of analytical and physicochemical properties of compounds of the rare and nonferrous metals and their application in industrial quality control.

ASSOCIATION: none

SUBMITTED: 00 ENCL: 00 SUB CODE: MM, GO

NO REF SOV: 000 OTHER: 000 JPRS

Card 3/3

APPROVED FOR RELEASE: 06/06/2000 CIA-RDP86-00513R000103010008-8"

"APPROVED FOR RELEASE: 06/06/2000 CIA-RDP86-00513R000103010008-8

SOKOLOVA, L.D.; KOVALENKO, P.N.; BAGDASAROV, K.N.

Cementation of antimony with metallic cadmium. Zhur.anal.khim. 19 no.10:1196-1199 '64. (MIRA 17:12)

1. Rostov-on-the-Don State University.

APPROVED FOR RELEASE: 06/06/2000 CIA-RDP86-00513R000103010008-8"

"APPROVED FOR RELEASE: 06/06/2000 CIA-RDP86-00513R000103010008-8

GAVRILKO, Yu.M.; KOVALENKO, P.N.; BAGDASAROV, K.N.

Electrolytic separation of molybdenum and rhenium and their determination. Zhur. anal. khim. 19 no.12:1478-1481 '64 (MIRA 18:1)

1. Rostov-on-the-don State University.

APPROVED FOR RELEASE: 06/06/2000 CIA-RDP86-00513R000103010008-8"

"APPROVED FOR RELEASE: 06/06/2000 CIA-RDP86-00513R000103010008-8

KOVALENKO, P.N.; BAGDASAROV, K.N.

Interuniversity Conference on the Analytical and Physicochemical Properties of Complex Compounds of Rare and Nonferrous Metals. Zhur. anal. khim. 19 no.8:1043-1044 '64.

(MIRA 17:11)

APPROVED FOR RELEASE: 06/06/2000 CIA-RDP86-00513R000103010008-8"

"APPROVED FOR RELEASE: 06/06/2000 CIA-RDP86-00513R000103010008-8

GAVRILKO, Y.M.; KOVALENKO, P.N.; BAGDASAROV, K.N.

Oscillographic polarographic determination of rhenium. Zhur. VKHO 10 no.2:236-238 '65. (MIRA 18:6)

1. Rostovskiy-na-Donu gosudarstvennyy universitet.

APPROVED FOR RELEASE: 06/06/2000 CIA-RDP86-00513R000103010008-8"

"APPROVED FOR RELEASE: 06/06/2000 CIA-RDP86-00513R000103010008-8

IVAKHNENKO, P.N.; BAGDASAROV, K.N.

Spectrophotometric study of ethacridine diazotization. Apt. delo 14 no.1:38-44 Ja-F '65. (MIRA 18:10)

1. Rostovskiy gosudarstvennyy universitet.

APPROVED FOR RELEASE: 06/06/2000 CIA-RDP86-00513R000103010008-8"

"APPROVED FOR RELEASE: 06/06/2000 CIA-RDP86-00513R000103010008-8

USSR/Physical Chemistry - Crystals, B-5

Abst Journal: Referat Zhur - Khimiya, No 1, 1957, 284

Author: Bagdasarov, Kh. S., and Kapustin, A. P.

Institution: None

Title: On the Etching of Specimens with the Aid of Ultrasonic Oscillations

Original Periodical: Kristallografiya, 1956, Vol 1, No 1, 139-140

Abstract: A method is proposed for the etching of crystals contained in saturated mother liquor by means of ultrasonic waves. Etchings along different planes have been obtained for a number of crystals. The experiments were carried out with a magneto-striction-type generator rated at 1 kw with a frequency of 40 kc; exposure time was 2-3 minutes.

Card 1/1

APPROVED FOR RELEASE: 06/06/2000 CIA-RDP86-00513R000103010008-8"

"APPROVED FOR RELEASE: 06/06/2000 CIA-RDP86-00513R000103010008-8

BAGDASAROV, KH. S.

AKULENOK, Ye.M.; BAGDASAROV, Kh.S.; KHAIMOV-MAL'KOV, V.Ya.

Effect of mechanical stirring and ultrasonic vibrations on the process of adsorption of impurities by monocrystals. Kristallografiia 2 no.1:197-198 '57. (MLRA 10:7)

1. Institut kristallografii Akademii nauk SSSR.
(Crystals--Growth)

APPROVED FOR RELEASE: 06/06/2000 CIA-RDP86-00513R000103010008-8"

"APPROVED FOR RELEASE: 06/06/2000 CIA-RDP86-00513R000103010008-8

AUTHOR: Bagdasarov, Kh.S. and V.Ya. Khaimov-Mal'kov 70-2-24/24

TITLE: Certain experimental data on the nature of the formation of etch figures in an ultrasonic field. (Nekotoryye eksperimentalnyye dannyye po prirode obrazovaniya figur travleniya v ultrazvukovom pole)

PERIODICAL: "Kristallografiya" (Crystallography), 1957, Vol.2, No.2, pp. 309-310, (U.S.S.R.)

ABSTRACT: It was postulated that ultrasonic radiation falling on a crystal opens a large number of small cracks on the crystal face which then act as nuclei for the formation of etch figures. The Ioffe effect was used to examine this. The tensile strength of NaCl crystals was measured under a variety of conditions. Dry, the strength was about 400 g/mm^2, in static water about 2 400 and in running water about 5 000. In an ultrasonic field at 717 kc/s, while submerged in water, the tensile strength was about 4 000 g/mm^2 but in a field of the same intensity at 22 kc/s the tensile strength fell to 400. No change in these values (for room temperature) was observed at 80 C. It is thought that the cavitation at 22 kc/s reduces the strength to that in air and causes micro-cracks.

Card 1/2

Acknowledgments to Acad. A.V. Shubnikov.

There are 2 tables and 3 Slavic references.

APPROVED FOR RELEASE: 06/06/2000 CIA-RDP86-00513R000103010008-8"

"APPROVED FOR RELEASE: 06/06/2000 CIA-RDP86-00513R000103010008-8

BAGDASAROV, Kh. S., Cand Chem Sci -- (diss) "Experimental study of the processes of crystallization and dissolution in ~~the~~ an ultrasonic field." Mos, 1958. 7 pp (Acad Sci USSR, Inst of Crystallography), 100 copies (KL, 16-58, 116)

APPROVED FOR RELEASE: 06/06/2000 CIA-RDP86-00513R000103010008-8"

"APPROVED FOR RELEASE: 06/06/2000 CIA-RDP86-00513R000103010008-8

AUTHOR: Bagdasarov, Kh.S. SOV/70-3-1-25/26

TITLE: On the Effect of Ultrasonic Vibrations on the Process of Solution of Monocrystals (K voprosu vliyaniya ul'trazvukovykh kolebaniy na protsess rastvoreniya monokristallov)

PERIODICAL: Kristallografiya, 1958, Vol 3, Nr 1, pp 110-112 (USSR)

ABSTRACT: Recently, a number of papers have been published in Soviet journals (Refs 1-3) in which the effect of ultrasonic vibrations on the growth and solution of monocrystals was considered. The present paper reports experimental data which may be used in the elucidation of the mechanism of the effect of ultrasound on these processes. Experiments were carried out at 20 °C in a thermostat consisting of two plexiglass vessels one inside the other. A quartz crystal was placed at the bottom of the outer vessel and produced vibrations at a frequency of 2.5 Mc/s. The inner vessel contained a water solution with an alum crystal. The experiments were carried out in the field of standing ultrasonic waves using crystals whose linear dimensions were greater than the wavelength of the ultrasonic waves. The process of solution and growth were observed optically by "Tepler's method" and it was found that ultrasonic

Card1/3

APPROVED FOR RELEASE: 06/06/2000 CIA-RDP86-00513R000103010008-8"

"APPROVED FOR RELEASE: 06/06/2000 CIA-RDP86-00513R000103010008-8

vibrations have a real effect upon the diffusion layer. Figure 1a shows the form of the diffusion layer without the ultrasonic field and Figure 1b shows the same layer in the presence of the field. As can be seen from these photographs, the positions of maximum and minimum density of the solute follow a regular pattern. The solute appears to aggregate at the antinodes of the ultrasonic wave. This accumulation of matter at the antinodes takes place after the standing ultrasonic wave has been produced. It was also noticed that the solute tends to displace itself along antinodes, i.e. perpendicularly to the ultrasonic beam. The structure of the diffusion layer is explained on the basis of Keck's work (Ref 4).

According to the mechanism now proposed, the standing ultrasonic waves form a "corrugated" pattern on the faces of the crystal as shown in Figure 3. This latter is described by the formula:

$$d = \lambda/2 \sin \alpha$$

Card2/3 where d is the distance between successive "humps" on

APPROVED FOR RELEASE: 06/06/2000 CIA-RDP86-00513R000103010008-8"

"APPROVED FOR RELEASE: 06/06/2000 CIA-RDP86-00513R000103010008-8

the crystal face, α is the angle between the normal to the crystal face and the direction of propagation of the ultrasonic vibrations and λ is the wavelength. It was found experimentally that this formula describes the phenomenon very well (cf. table on p 112, in which the second column gives the calculated values of d in mm and the third column the measured values of this quantity). The author thanks A.P. Kapustin for supervising the work described in the present paper. There are 3 figures, 1 table and 4 references, 3 of which are Soviet and 1 German.

ASSOCIATION: Institut kristallografii AN SSSR (Institute of Crystallography of the Ac.Sc.USSR)

SUBMITTED: July 12, 1957

APPROVED FOR RELEASE: 06/06/2000 CIA-RDP86-00513R000103010008-8"

"APPROVED FOR RELEASE: 06/06/2000 CIA-RDP86-00513R000103010008-8

BAGDASAROV Kh. S.

PHASE I BOOK EXPLOITATION SOV/3528

Moscow. Dom nauchno-tekhnicheskoy propagandy

Primeneniye ul'trazvuka v promyshlennosti; sbornik statey (Industrial Use of Ultrasound; Collection of Articles) Moscow, Mashgiz, 1959. 301 p. 8,000 copies printed.

Sponsoring Agency: Obshchestvo po rasprostraneniyu politicheskikh i nauchnykh znaniy RSFSR.

Ed. (Title page): V.F. Nozdrev, Doctor of Physical and Mathematical Sciences, Professor; Ed. (Inside book): G.P. Kochetova, Engineer; Tech. Ed.: V.D. El'kind; Managing Ed. for Literature on Machinery and Instrument Manufacturing (Mashgiz): N.V. Pokrovskiy, Engineer.

PURPOSE: This book is intended for engineers and technicians engaged in the application of ultrasonics in machinery manufacture and in other branches of industry.

COVERAGE: This is a collection of papers read at the first all-Union conference on the use of ultrasonics in industry. Attention is focused mainly on the description of ultrasonic equipment and on the use of ultrasound for the machining of hard materials and for flaw detection. The effect of ultrasound on metal-crystallization processes is also discussed. No personalities are mentioned. References accompany many of the papers.

Kitaygorodskiy, Yu.I., Engineer; and M.G. Kogan, Candidate of Technical Sciences. Ultrasonic Equipment for Industrial Applications 64

Markov, A.I., Candidate of Technical Sciences, Docent. Design and Construction of Vibrators for Ultrasonic Machining 77

Bulycheva, I.N., Candidate of Technical Sciences; Ye.I. Gurvich, Candidate of Technical Sciences; and Ya.P. Seliaskiy, Candidate of Technical Sciences. Magnetic Alloys for Ultrasonic Applications 91

Makarov, L.O., Engineer. Methods of Making Design Calculations for Bar-Type Exponential Ultrasonic Concentrators 102

Golyamina, I.P. Use of Ferrites as Ultrasonic-Wave Radiators 115

Semennikov, Yu.B., Engineer. Method of Transforming Input Resistance of a T-Bar Radiator 125

Sirotyuk, M.G., Engineer. Matching a Generator of Electric Oscillations With a Quartz Radiator Directly Connected With the Generator Circuit 129

Lyamin, B.N., Engineer. Characteristics of the Ultrasonic Machining of Metals 136

Pisarevskiy, M.M., Candidate of Technical Sciences; and A.A. Klenov. Experience Gained at the Leningradskiy Metallicheskiy Zavod (Leningrad Metal-Products Plant) in the Ultrasonic Drilling of Holes in Quartz Plates 146

D'yachenko, P.Ye., Doctor of Technical Sciences, Professor; Yu. N. Mizrokhi, Engineer; and V.G. Aver'yanova. Some Problems in the Ultrasonic Machining of Materials 149

Teumin, I.I., Candidate of Physical and Mathematical Sciences. Effect of Elastic Vibrations on the Crystallization and Processing Properties of Alloys 163

Bagdasarov, Kh.S., Candidate of Chemical Sciences. Effect of Ultrasonic Vibrations on the Process of Crystallization 175

Shrayber, D.S., Candidate of Technical Sciences. Ultrasonic Flaw Detection 184

Yermolov, I.N., Engineer. Ultrasonic Instruments Developed by TsNIITMASh for the Measurement of Thickness and Product Control 211

Gubanova, M.R., Candidate of Technical Sciences. Ultrasonic Detection of Flaws in Massive Welds 223

Yegorov, N.N., Ultrasonic Inspection of Case Depth in Electrically Hardened Steel Products 240

Babkin, N.V., Engineer. Design of Piezoelectric Transducers for Ultrasonic Flaw Detectors 253

APPROVED FOR RELEASE: 06/06/2000 CIA-RDP86-00513R000103010008-8"

"APPROVED FOR RELEASE: 06/06/2000 CIA-RDP86-00513R000103010008-8

40965

18.9500

S/081/62/000/016/004/043
B168/B186

AUTHORS: Bagdasarov, Kh. S., Berezhkova, G. V., Kapustin, A. P.

TITLE: Growing of single crystals of zinc in an ultrasonic field

PERIODICAL: Referativnyy zhurnal. Khimiya, no. 16, 1962, 30, abstract 16B180 (In collection: Primeneniye ul'traakust. k issled. veshchestva. no. 12, M., 1960, 41-44)

TEXT: Investigations (RZhKhim, no. 2, 1959, 3762) were continued with a view to clarifying the effects of the ultrasonic field on the distribution of dislocations. Zinc crystals grown in such a field by Bridgman's method were tested for compressive strength before and after calcination at 350°C, and crystals not grown in an ultrasonic field, but only irradiated, were also tested. The reasons for the former being stronger than the latter are discussed. From a comparison of the compression curves for polycrystals and single crystals it is concluded that the toughening effect is due to increased block structure in the crystal grown in an ultrasonic field; this is indicated also by Laue diffraction patterns showing the reflex bifurcation characteristic of the block structure.

Card 1/2

APPROVED FOR RELEASE: 06/06/2000 CIA-RDP86-00513R000103010008-8"

"APPROVED FOR RELEASE: 06/06/2000 CIA-RDP86-00513R000103010008-8

Growing of single crystals of zinc... S/081/62/000/016/004/043
B168/B186

The fact that crystals grown in an ultrasonic field have a large number of block boundaries indicates that in these crystals the dislocation density is higher than in those grown under normal conditions, and it is suggested that this effect is one of the reasons for the increased strength. [Abstracter's note: Complete translation.]

Card 2/2

APPROVED FOR RELEASE: 06/06/2000 CIA-RDP86-00513R000103010008-8"

"APPROVED FOR RELEASE: 06/06/2000 CIA-RDP86-00513R000103010008-8

41341

S/081/62/000/017/005/102
B166/B180

18.9500

AUTHORS: Bagdasarov, Kh. S., Dobrzhanskiy, G. F., Il'in, N. P.

TITLE: Universal arrangement for growing single crystals at high temperatures

PERIODICAL: Referativnyy zhurnal. Khimiya, no. 17, 1962, 33, abstract 17B194 (In collection: Rost kristallov. v. 3. M., AN SSSR, 1961, 254 - 257, Discuss., 501 - 502)

TEXT: A prototype has been developed which can be used for growing crystals by any method based on crystallization from the melt. It is noted that crystals can be grown in this unit both in a vacuum of up to 10^{-5} mm Hg or in a gaseous medium at pressures of up to 2 atm. Two methods of heating are suggested: induction and electric. The merits of the plant are discussed, and the procedure for various methods of crystallization. [Abstracter's note: Complete translation.]

Card 1/1

APPROVED FOR RELEASE: 06/06/2000 CIA-RDP86-00513R000103010008-8"

"APPROVED FOR RELEASE: 06/06/2000 CIA-RDP86-00513R000103010008-8

S/070/62/007/003/015/026
E132/E460

AUTHORS: Khaimov-Mal'kov, V.Ya., Zhmurova, Z.I., Bagdasarov, Kh.S., Akulenok, Ye.M.

TITLE: On the question of the sectorial growth of crystals

PERIODICAL: Kristallografiya, v.7, no.3, 1962, 437-441

TEXT: Certain regularities in the production of macro-nonuniformities in crystals during their growth from solution are discussed. The connection between the forms of the growth pyramids and the conditions of crystallization are examined. Using the example of alums it is shown that the development of a sectorial structure is connected with the trapping by the growing crystal of mechanical impurities and with the inclusion of structural impurities. The following signs can be used to diagnose the kinds of defects in crystals. The relative rate of growth of a face which is being spoilt is, in the case of structural impurities, significantly decreased (blocking) but in the case of mechanical impurities it is significantly increased. In the first case, if the symmetry of the crystal allows it, the defective face forms the basic shape of the crystal and in

Card 1/2

APPROVED FOR RELEASE: 06/06/2000 CIA-RDP86-00513R000103010008-8"

"APPROVED FOR RELEASE: 06/06/2000 CIA-RDP86-00513R000103010008-8

the second case it is tapered out. The degree of spoiling of the growth pyramids (degree of trapping of impurities) decreases with increasing supersaturation for structural impurities but decreases for mechanical impurities. For high concentrations of structural impurities the surface of an affected face has a specific character of peeling flakes. (Mechanical impurities are insoluble particles or colloidal bodies in suspension, structural impurities are ions or dyes in solution which enter the crystal as isomorphous replacements.) There are 8 figures.

ASSOCIATION: Institut kristallografii AN SSSR
(Institute of Crystallography AS USSR)

SUBMITTED: June 28, 1961

APPROVED FOR RELEASE: 06/06/2000 CIA-RDP86-00513R000103010008-8"

"APPROVED FOR RELEASE: 06/06/2000 CIA-RDP86-00513R000103010008-8

KHAIMOV-MAL'KOV, V.Ya.; BAGDASAROV, Kh.S.; AKULENOK, Ye.M.

Relation between the intensity distribution in a ruby laser and defects in the crystals. Kristallografiia 8 no.6:925-926 N-D'63. (MIRA 17:2)

1. Institut kristallografii AN SSSR.

APPROVED FOR RELEASE: 06/06/2000 CIA-RDP86-00513R000103010008-8"

"APPROVED FOR RELEASE: 06/06/2000 CIA-RDP86-00513R000103010008-8

ZHMUROVA, Z.I.; KHAIMOV-MAL'KOV, V.Ya.; AKULENOK, Ye.M.; BAGDASAROV, Kh.S.

Distribution of an isomorphic impurity in crystals of $Zn(NH_4)_2(SO_4)_2 \cdot 6H_2O$ and K_2SO_4 during crystallization. Kristallografiia 8 no.6:936-937 N-D'63. (MIRA 17:2)

1. Institut kristallografii AN SSSR.

APPROVED FOR RELEASE: 06/06/2000 CIA-RDP86-00513R000103010008-8"

"APPROVED FOR RELEASE: 06/06/2000 CIA-RDP86-00513R000103010008-8

ACCESSION NR: AT4040553 S/2564/64/004/000/0089/0091

AUTHOR: Belyayev, L.M.; Dobrzhanskiy, G.F.; Bagdasarov, Kh. S.

TITLE: Some changes in the method of growing crystals from a melt

SOURCE: AN SSSR. Institut kristallografii. Rost kristallov, v. 4, 1964, 89-91

TOPIC TAGS: crystallography, crystal growth, crystal cultivation, crystal shape, lithium fluoride, cesium iodide, naphthalene

ABSTRACT: To facilitate the process of growing crystals of prescribed size and shape, the authors designed the modified set-up shown in the Enclosure. The set-up consists of an electrical oven (1) with thermoinsulation (2) into which, on a movable stand (9), a crucible with a reactant (8) is placed. The crystal holder (4, 6) is fixed on the supports (7, 11) and can be rotated by the motor (5) to bring the seed crystal (10) into the desired position, where it is fixed by the clamp (3). Using this set-up, the authors obtained crystals of LiF and CsI at a rate of 20-25 mm/hr with a 6-8 mm thick seed crystal, and crystals of naphthalene at a rate of 25-30 mm/hr with a 7-9 thick seed crystal. Crystals of prescribed thickness with

APPROVED FOR RELEASE: 06/06/2000 CIA-RDP86-00513R000103010008-8"

"APPROVED FOR RELEASE: 06/06/2000 CIA-RDP86-00513R000103010008-8

ACCESSION NR: AT4040553

practically any diameter can be obtained using the assembly. A constant distribution of temperatures in both zones of the process is insured and the possibility of additional thermoelastic stresses in the growing crystal is eliminated. The shape of the growing crystal can be changed by changing the slope of the crystal holder. "The authors thank V. P. Belov (deceased) and A. M. Kevorkov for their assistance in designing the set-up, and G. B. Netesov and K. S. Cherny*shev for conducting the crystallization experiments. Orig. art. has: 3 figures.

ASSOCIATION: Institut kristallografii AN SSSR (Institute of Crystallography, AN SSSR)

SUBMITTED: 00 DATE ACQ: 02Jul64 ENCL: 01

SUB CODE: IC NO REF SOV: 002 OTHER: 002

Card 2/3

APPROVED FOR RELEASE: 06/06/2000 CIA-RDP86-00513R000103010008-8"

"APPROVED FOR RELEASE: 06/06/2000 CIA-RDP86-00513R000103010008-8

ACCESSION NR: AT4040553

ENCLOSURE: 01

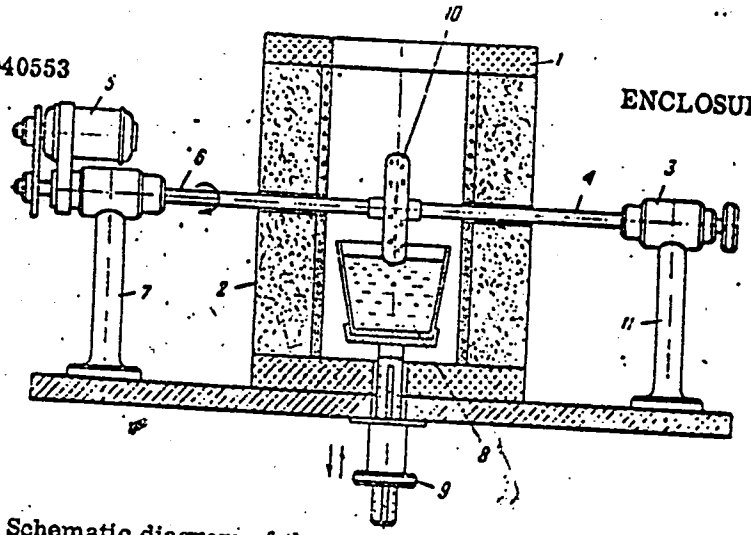

Fig. 1. Schematic diagram of the apparatus.

Card 3/3

APPROVED FOR RELEASE: 06/06/2000 CIA-RDP86-00513R000103010008-8"

"APPROVED FOR RELEASE: 06/06/2000 CIA-RDP86-00513R000103010008-8

ACCESSION NR: AP4020972 S/0051/64/016/003/0536/0538

AUTHOR: Bazhulin, P. A.; Daly*shev, V. I.; Markin, A. S.; Rakov, A. V.; Bagdasarov, Kh. S.

TITLE: Investigation of the luminescence and stimulated emission spectra of different CaF_2 crystals doped with U^{3+}

SOURCE: Optika i spektroskopiya, v. 16, no. 3, 1964, 536-538

TOPIC TAGS: stimulated emission, laser, uranium ion luminescence, trivalent uranium, trivalent uranium emission, trivalent uranium luminescence, calcium fluoride, uranium doped calcium fluoride, luminescence center, lasing center

ABSTRACT: Investigators (P.P.Sorokin and M.J.Stevenson, Phys.Rev.Letters, 5, 557, 1960; and Adv.in Quant.Electr. 65, 1961) have observed stimulated emission (laser output) from $CaF_2:U^{3+}$ crystals, but in different specimens exhibit different wavelengths (2.5, 2.6, and 2.24 mμ). These differences are attributed to different symmetry of the field about the U^{3+} ions in the crystal lattice. The authors investigated different $CaF_2:U^{3+}$ crystals grown at the Institute of Crystallography of the Academy of Sciences; some lased only at 2.5 or 2.6 mμ, but a few specimens exhibited stimulated emission simultaneously at 2.510 ± 0.005 and 2.605 ± 0.005 mμ.

Card 1/3

APPROVED FOR RELEASE: 06/06/2000 CIA-RDP86-00513R000103010008-8"

"APPROVED FOR RELEASE: 06/06/2000 CIA-RDP86-00513R000103010008-8

ACCESSION NR: AP4020972

These are referred to as "mixed" crystals. In view of the desirability in some cases of having a laser with several wavelengths in the present work there were studied and compared the luminescence and stimulated emission spectra of the "mixed" crystals and, for comparison, of the "single-wavelength" crystals. The luminescence spectra were recorded under infrared flash tube excitation by means of a ZMR-3 mirror monochromator equipped with an InSb detector. The spectra were recorded at different temperatures in the range from 0 to -175°C. In the luminescence spectra of "mixed" crystals there appear lines at both 2.5 and 2.6 mμ; with decrease in temperature these become narrower, and the 2.6 mμ line become relatively more intense. The same two lines, exhibiting the same temperature behavior, were observed in the luminescence spectra of the "simple" crystals yielding stimulated emission only at 2.6 mμ. It is inferred from the behavior of the different crystals that the "mixed" crystals may be regarded as a mechanical mixture of two different forms of U^{3+} ions, with different symmetry, which emit independently of one another. This inference is supported by the results of measuring the temperature dependences of the lasing threshold for the "2.5 mμ", "2.6 mμ", and "mixed" crystals: the different types of U^{3+} ions (centers) act as independent sources of coherent radiation. During the preparation of the present report a paper by J. Wittke, Z. Kiss,

Card 2/3

APPROVED FOR RELEASE: 06/06/2000 CIA-RDP86-00513R000103010008-8"

"APPROVED FOR RELEASE: 06/06/2000 CIA-RDP86-00513R000103010008-8

ACCESSION NR: AP4020972

R. Duncan, and J. McCormick (Proc.IEE,51,56,1963) appeared, reporting similar studies and some of the same inferences. Orig. art. has: 2 figures.

ASSOCIATION: none

SUBMITTED: 31May63 DATE ACQ: 02Apr64 ENCL: 00

SUB CODE: PH NR REF SOV: 002 OTHER: 004

Card 3/3

APPROVED FOR RELEASE: 06/06/2000 CIA-RDP86-00513R000103010008-8"

"APPROVED FOR RELEASE: 06/06/2000 CIA-RDP86-00513R000103010008-8

L 2329-66 EWA(k)/FBD/EWT(1)/EWT(m)/EPF(c)/EEC(k)-2/T/EWP(t)/EWP(k)/EWP(b)/ EWA(m)-2/EWA(h) SCTB/IJP(c) WG/JD/JW/JG

ACCESSION NR: AP5024560 UR/0070/65/010/005/0746/0747
548.0

62
56
B

AUTHOR: Bagdasarov, Kh. S.; Voron'ko, Yu. K.; Kaminskiy, A. A.; Osiko, V. V.; Prokhorov, A. M.
44 44 44 44 44

TITLE: Stimulated emission of neodymium-doped yttrofluorite at room temperature

SOURCE: Kristallografiya, v. 10, no. 5, 1965, 746-747, and top half of insert facing p. 743

TOPIC TAGS: solid state laser, neodymium, yttrofluorite, stimulated emission
25,44

ABSTRACT: Certain basic characteristics of a neodymium-doped yttrofluorite (CaF_2—YF_3) laser operating at room temperature on two wavelengths are described. The present work is part of a study to improve the optical properties of active materials for fluorine-compound lasers. Type I CaF_2—YF_3 crystals with 0.1—0.5% (by weight) concentrations of Nd^{3+} were used. Generation at ∿10461 and ∿10640 Å corresponded to threshold energies of ∿130 and ∿35 j, respectively, supplied to a standard IFP-800 xenon flashlamp. The flashlamp was surrounded by a tubular glass (ZLS-17) filter in order to prevent undesirable aging of the neodymium. The space between the flashlamp and filter was filled with cooling water. The working crystals

Card 1/2

APPROVED FOR RELEASE: 06/06/2000 CIA-RDP86-00513R000103010008-8"

"APPROVED FOR RELEASE: 06/06/2000 CIA-RDP86-00513R000103010008-8

L 2329-66
ACCESSION NR: AP5024560 6

were in the form of cylindrical rods with polished ends (parallel within 10—20"), each ∿75 mm long and ∿6.5 mm in diameter. Confocal external mirrors were used which had an ∿0.9% transmission at 1.06 μ. The mirrors were 20 mm in diameter and had a radius of curvature of 500 mm. The linewidths at ∿10461 Å and ∿10640 Å were ∿0.8 cm^{-1} and ∿3 cm^{-1}, respectively, at 300K. The most intense luminescence was due to the $^4F_{3/2} \rightarrow {}^4I_{11/2}$ transition, and the lifetime of the excited $^4F_{3/2}$ state of a CaF_2—YF_3 crystal with a 0.5% Nd^{3+} concentration at 300K was ∿1 msec. The results show further that the generation in the described system occurs at a considerably lower threshold than in the case of known crystals based on fluorine compounds. Among previously investigated active media, only $CaWO_4:Nd^{3+}$ and $Gd_2O_3:Nd^{3+}$ are known to lase at two wavelengths at 300K with lower thresholds. Orig. art. has: 3 figures. [YK]

ASSOCIATION: Fizicheskiy institut im. P. N. Lebedeva (Physics Institute); Institut kristallografii AN SSSR (Institute of Crystallography, AN SSSR)

SUBMITTED: 07May65 ENCL: 00 SUB CODE: EC

NO REF SOV: 004 OTHER: 002 ATD PRESS: 4107

Rare Earth Compounds

Card 2/2

APPROVED FOR RELEASE: 06/06/2000 CIA-RDP86-00513R000103010008-8"

"APPROVED FOR RELEASE: 06/06/2000 CIA-RDP86-00513R000103010008-8

CHERNOV, A.A., kand.fiz.-matem.nauk; BAGDASAROV, Kh.S., kand.khim.nauk

The colloquium "Crystal adsorption and growth" held in France. Vest. AN SSSR 35 no.10:111 O '65. (MIRA 18:10)

APPROVED FOR RELEASE: 06/06/2000 CIA-RDP86-00513R000103010008-8"

"APPROVED FOR RELEASE: 06/06/2000 CIA-RDP86-00513R000103010008-8

L 9498-66 EWA(k)/FBD/EWT(1)/EEC(k)-2/T/EWP(k)/EWA(m)-2/EWA(h) SOTB/IJP(c)

ACC NR: AP6001224 WG/GG SOURCE CODE: UR/0363/65/001/012/2088/2092

AUTHOR: Bagdasarov, Kh. S.; Voron'ko, Yu. K.; Kaminskiy, A. A.; Osiko, V. V.

ORG: Physics Institute im. P. N. Lebedev, Academy of Sciences SSSR (Fizicheskiy institut Akademii nauk SSSR); Institute of Crystallography, Academy of Sciences SSSR (Institut kristallografii Akademii nauk SSSR)

TITLE: Fluoride-base systems as active quantum electronic materials

SOURCE: AN SSSR. Izvestiya. Neorganicheskiye materialy, v. 1, no. 12, 1965, 2088-2092

TOPIC TAGS: laser, infrared laser, solid state laser, stimulated emission, fluoride base laser

ABSTRACT: Stimulated emission in the infrared spectral region (10,540 Å) has been achieved with a low generation threshold (about 50 j) from Nd^{3+} activated BaF_2-LaF_3 single crystals at room temperature. The crystals, described as a new laser material, were grown by Stockbarger technique from a BaF_2-LaF_3 mixture of variable composition with 1% NdF_3 addition. The growth technique was described earlier [Yu. K. Voron'ko, V. V. Osiko, V. T. Udovenchik, M. M. Fursikov. Fiz. tv. tela, 7, 267 (1965)]. Preliminary study of the absorption and luminescence spectra of the crystals indicated the characteristics required for laser, i.e., an unusually high absorption coefficient in the 0.6—1.0 μ region at 300K and the highest luminescence intensity

Card 1/2 UDC: 546.161

APPROVED FOR RELEASE: 06/06/2000 CIA-RDP86-00513R000103010008-8"

"APPROVED FOR RELEASE: 06/06/2000 CIA-RDP86-00513R000103010008-8

L 9498-66

ACC NR: AP6001224

0

peak at 1.05 μ, corresponding to $^4F_{3/2}$—$^4I_{11/2}$ transition, also at 300K. The line width in the luminescence spectrum insignificantly increased with temperature increase from 77K to 300K. These favorable spectral characteristics were attributed to the distribution of Nd^{3+} ions between different types of electric crystal fields. Stimulated emission was excited with a Xe-flash lamp in single crystal rods (75 x 5.5 mm) in the cavity consisting of external confocal dielectric mirrors. The emission possessed usual laser characteristics as shown by the time dependence at different pumping energies. The physical properties of the crystals make possible a continuous laser emission at 300K. Orig. art. has: 4 figures. [JK]

SUB CODE: 20/ SUBM DATE: 13Jul65/ ORIG REF: 002/ OTH REF: 005/ ATD PRESS: 4164

Card 2/2

APPROVED FOR RELEASE: 06/06/2000 CIA-RDP86-00513R000103010008-8"

"APPROVED FOR RELEASE: 06/06/2000 CIA-RDP86-00513R000103010008-8

L 20581-66 T/EWP(t) IJP(c) JD/JW/JG

ACC NR: AP6002044 SOURCE CODE: GE/0030/65/012/002/0905/0912

AUTHOR: Bagdasarov, Kh. S.; Voronko, Yu. K.; Kaminskii, A. A.; Krotova, L. V.; Osiko, V. V.

ORG: P. N. Lebedev Physical Institute of the Academy of Sciences of the USSR, Moscow; Institute of Crystallography of the Academy of Sciences of the USSR, Moscow

TITLE: Modification of the optical properties of CaF_2-TR^{3+} crystals by yttrium admixtures

SOURCE: Physica status solidi, v. 12, no. 2, 1965, 905-912

TOPIC TAGS: optic crystal, crystal imperfection, crystal impurity, yttrium compound, absorption spectrum, luminescence spectrum, equilibrium constant, fluoride, ionic crystal, rare earth element

ABSTRACT: Absorption and luminescence spectra of CaF_2-Nd^{3+} (type 1) (V. V. Osiko, Crystal growth, Encyclopedia, v. 5, Publishing House of the Academy of Sciences SSSR, 1965) crystals were investigated as a function of the concentration of added yttrium fluoride. The appearance of new lines and a decrease in the line intensities because of the addition of yttrium is attributed to a shift in the equilibrium of Nd centers. Some possible models are discussed. The equilibrium of centers of rare-earth ions (TR^{3+}) in the presence of yttrium fluoride

Card 1/2

APPROVED FOR RELEASE: 06/06/2000 CIA-RDP86-00513R000103010008-8"

"APPROVED FOR RELEASE: 06/06/2000 CIA-RDP86-00513R000103010008-8

L 20581-66

ACC NR: AP6002044

in CaF_2-Nd^{3+} crystals was calculated approximately. The authors thank S. P. Afanasev and M. F. Limanovskaya for the growth of crystals and V. B. Aleksandrov for his help in the experiment. Orig. art. has: 4 figures and 2 formulas. [Based on author's abstract] [NT]

SUB CODE: 20/ SUBM DATE: 11Sep65/ ORIG REF: 008/ OTH REF: 005

Card 2/2 BK

APPROVED FOR RELEASE: 06/06/2000 CIA-RDP86-00513R000103010008-8"

"APPROVED FOR RELEASE: 06/06/2000 CIA-RDP86-00513R000103010008-8

BEL'SKIKH, V.I., kand.tekhn.nauk; BAGDASAROV, N.V., inzh.

Determining the loading degree of an engine by means of an electric-light signaling mechanism. Trakt. i sel'khozmash. no.3:11-13 Mr '65. (MIRA 18:5)

1. Gosudarstvennyy vsesoyuznyy nauchno-issledovatel'skiy tekhnologicheskiy institut remonta i ekspluatatsii mashinno-traktornogo parka (for Bel'skikh). 2. Vsesoyuznyy nauchno-issledovatel'skiy institut mekhanizatsii sel'skogo khozyaystva (for Bagdasarov).

APPROVED FOR RELEASE: 06/06/2000 CIA-RDP86-00513R000103010008-8"

"APPROVED FOR RELEASE: 06/06/2000 CIA-RDP86-00513R000103010008-8

MAMEDZADE, S.A.; SALIKHOV, S.M.; BAGDASAROV, N.Ye.

Pathogenesis of pulmonary suppurative diseases and their treatment. Azerb. med. zhur. 42 no.3:60-67 Mr '65. (MIRA 18:6)

APPROVED FOR RELEASE: 06/06/2000 CIA-RDP86-00513R000103010008-8"

"APPROVED FOR RELEASE: 06/06/2000 CIA-RDP86-00513R000103010008-8

BAGDASAROV, N.Ye.

Using naftalan for patients with enterobiasis. Med.paraz. i paraz. bol.supplement to no.1:63 '57. (MIRA 11:1)

1. Iz Bankinskoy bol'nitsy imeni Semashko.
(NEMATODA) (OINTMENTS)

APPROVED FOR RELEASE: 06/06/2000 CIA-RDP86-00513R000103010008-8"

"APPROVED FOR RELEASE: 06/06/2000 CIA-RDP86-00513R000103010008-8

MAMEDZADE, S.A.; BAGDASAROV, N.Ye.

Comparative evaluation of treatment for gastric and duodenal ulcer and some peculiarities in their course. Azerb. med. zhur. no.11: 18-24 N '60. (MIRA 13:12)

(PEPTIC ULCER)

APPROVED FOR RELEASE: 06/06/2000 CIA-RDP86-00513R000103010008-8"

"APPROVED FOR RELEASE: 06/06/2000 CIA-RDP86-00513R000103010008-8

MAMEDZADE, S.A.; BAGDASAROV, N.Ye.

Materials on the etiopathogenesis and treatment of hepatic amebiasis. Azerb. med. zhur. no. 3:19-25 Mr '61. (MIRA 14:4)
(AMEBIASIS) (LIVER—DISEASES)

APPROVED FOR RELEASE: 06/06/2000 CIA-RDP86-00513R000103010008-8"

"APPROVED FOR RELEASE: 06/06/2000 CIA-RDP86-00513R000103010008-8

BAGDASAROV, N.Ye.

Late results of the treatment of hepatic amebiasis. Azerb. med. zhur. no.7:35-38 Jl '61. (MIRA 15:1)
(AMEBIASIS) (LIVER DISEASES)

APPROVED FOR RELEASE: 06/06/2000 CIA-RDP86-00513R000103010008-8"

"APPROVED FOR RELEASE: 06/06/2000 CIA-RDP86-00513R000103010008-8

MAMED-ZADE, S.A., prof. (Baku); BAGDASAROV, N.Ya, kand. med. nauk (Baku)

Pathogenesis and treatment of amebiasis of the liver. Klin. med. 41 no.2:75-78 F'63 (MIRA 17:3)

1. Iz 1-y gospital'noy terapevticheskoy kliniki Azerbaydzhanskogo meditsinskogo instituta imeni N. Narimanova.

APPROVED FOR RELEASE: 06/06/2000 CIA-RDP86-00513R000103010008-8"

"APPROVED FOR RELEASE: 06/06/2000 CIA-RDP86-00513R000103010008-8

ACC NR: AR6035272 SOURCE CODE: UR/0169/66/000/009/G015/G015

AUTHOR: Plotnikov, L. M.; Bagdasarov, R. A.

TITLE: Microseismic zoning of the Kampyrravat area

SOURCE: Ref. zh. Geofizika, Abs. 9G89

REF SOURCE: Sb. Geol. stratigr. i seysmol. Uzbekistana. Tashkent, Nauka, 1966, 67-83

TOPIC TAGS: soil type, structural engineering, stratigraphy, seismicity, seismologic instrument, seismologic station, vibration, microseism, earthquake intensity, earthquake/VEGIK SEISMOGRAPH

ABSTRACT: From a engineering and geological standpoint, the area of the construction site of the Kampyrravat water reservoir comprises a series of sectors with varying soil conditions. The right bank of the Kara-Dar'ya River consists of rocky shale and diorite soils. The left bank has outcroppings of fractured and broken shales, a sector of friable loamy and marl- and-clay sandstones, and a sector consisting of loam and sandy loam and including gravel and rubble.

Card 1/2

UDC: 550.341

APPROVED FOR RELEASE: 06/06/2000 CIA-RDP86-00513R000103010008-8"

"APPROVED FOR RELEASE: 06/06/2000 CIA-RDP86-00513R000103010008-8

ACC NR: AR6035272

Instrumental observations with four seismic stations were carried out in these soil conditions with VEGIK receivers having a 1.1-sec vibration period. The frequency characteristics had a flat shape, and the amplification was on the order of 15,000. Weak local earthquakes served as sources of generation of seismic vibration. Spectral features of the vibrations of the surveyed earth layers were developed on the basis of earthquake recordings. Increments in earthquake intensity on various soils were calculated by methods of acoustic stiffnesses and resonance vibrations of the soil layers. The earthquake intensity on rocky soil was assumed as a unit. In cracked shale outcroppings on the left bank of the river, the intensity was found to increase by 0.5 of a point while on friable loamy soils it increased by 1 point; on loamy soils, and on loamy scils including gravel and rubble the earthquake intensity increased by 2 points. S. Puchkov. [Translation of abstract] [GC]

SUB CODE: 08, 20/

Card 2/2

APPROVED FOR RELEASE: 06/06/2000 CIA-RDP86-00513R000103010008-8"

"APPROVED FOR RELEASE: 06/06/2000 CIA-RDP86-00513R000103010008-8

L 35350-66 EWT(m)/T IJP(c)

ACC NR: AR6017797 SOURCE CODE: UR/0058/66/000/001/A047/A047

AUTHOR: Bagdasarov, R. E.; Blyumkina, Yu. A.

19 47 B

TITLE: Electronic device for registration of neutrons with a borated liquid scintillation detector against a large background of extraneous pulses

SOURCE: Ref. zh. Fizika, Abs. 1A422

REF SOURCE: Tr. 6-y Nauchno-tekhn. konferentsii po yadern. radioelektron. T. 1. M., Atomizdat, 1964, 53-68

TOPIC TAGS: scintillation detector, neutron detector, boron compound, pulse analyzer

ABSTRACT: The authors consider the operating principle of a borated liquid scintillation detector, intended for the registration of neutrons with energy of the order of several kev by the time-of-flight method. Along with the pulses due to the neutrons, such a detector usually generates pulses which are considerably larger in amplitude and are due to γ quanta. The maximum pulse-amplitude ratio of the γ-quanta and the neutrons is in this case ~300 ($E_{\beta\ max} \cong 3$ Mev), and the quantitative ratio of the different types of pulses from one neutron detector is as follows: 50 - 200 pulses/sec from neutrons, ~5 x 10^3 pulses/sec from the γ background, and (5 - 10) x 10^3 pulses/sec from the photomultiplier noise. A detailed description is presented of an electronic circuit which makes it possible to separate the pulses due to the neutrons from the pulses due to the γ background and the photomultiplier noise. Schematic diagrams are presented of separate units of the apparatus and the procedure for their adjustment is described. L. S. [Translation of abstract]

SUB CODE: 09, 20

Card 1/1

APPROVED FOR RELEASE: 06/06/2000 CIA-RDP86-00513R000103010008-8"

"APPROVED FOR RELEASE: 06/06/2000 CIA-RDP86-00513R000103010008-8

ABRAMOV, M.A.; ALIVERDIZADE, K.S.; AMIROV, Ye.M.; ARENSON, R.I.; ARSEN'YEV, S.I.; BAGDASAROV, R.M.; BAGDASAROV, G.A.; BADAMYANTS, A.A.; DANIYELYAN, G.N.; DZHAFAROV, A.A.; KAZAK, A.S.; KERCHENSKIY, M.M.; KONYUKHOV, S.I.; KRASNOBAYEV, A.V.; KURKOVSKIY, A.I.; LALAZAROV, G.S.; LARIONOV, Ye.P.; LISTENGARTEN, M.Ye.; LIVSHITS, B.L.; LISIKYAN, K.A.; LOGINOVSKIY, V.I.; LYSENKOVSKIY, P.S.; MOLCHANOV, G.V.; MAYDEL'MAN, N.M.; OKHON'KO, S.K.; ROMANIKHIN, V.A.; ROSIN, I.I.; RUSTAMOV, E.M.; SARKISOV, R.T.; SKRYPNIK, P.I.; SOBOLEV, N.A.; TARATUTA, R.N.; TVOROGOVA, L.M.; TER-GRIGORYAN, A.I.; USACHEV, V.I.; FAYN, B.P.; CHICHEROV, L.G.; SHAPIRO, Z.L.; SHEVCHUK, Yu.I.; TSUDIK, A.A.; ABUGOV, P.M., red.; MARTYNOVA, M.P., vedushchiy red.; DANIYELYAN, A.A.; TROFIMOV, A.V., tekhn.red.

[Oil field equipment; in six volumes] Neftianoe oborudovanie; v shesti tomakh. Moskva, Gos.nauchno-tekhn.izd-vo neft. i gorno-toplivnoi lit-ry. Vol.3. [Petroleum production equipment] Oborudovanie i instrument dlia dobychi nefti. 1960. 183 p. (MIRA 13:4)

(Oil fields--Equipment and supplies)

APPROVED FOR RELEASE: 06/06/2000 CIA-RDP86-00513R000103010008-8"

"APPROVED FOR RELEASE: 06/06/2000 CIA-RDP86-00513R000103010008-8

BAGDASAROV, R. N.

"Improving a Kurkevich Cigarette Machine," Tabak., 13, No.4, 1952

APPROVED FOR RELEASE: 06/06/2000 CIA-RDP86-00513R000103010008-8"

"APPROVED FOR RELEASE: 06/06/2000 CIA-RDP86-00513R000103010008-8

BAGDASAROV, Sh.B.

Study of the relation of number and depth of boreholes in a series. Trudy MGRI 30:14-17 '56. (MLRA 9:11)
(Boring) (Blasting)

APPROVED FOR RELEASE: 06/06/2000 CIA-RDP86-00513R000103010008-8"

"APPROVED FOR RELEASE: 06/06/2000 CIA-RDP86-00513R000103010008-8

VERCHERA, A.O.; BAGDASAROV, Sh.B.

Improve the effectiveness of exploratory drilling and blasting operations in mining. Razved. i okh.nedr 23 no.1:58-62 Ja '57. (MIRA 10:3)

1. Moskovskiy geologorazvedochnyy institut.
(Blasting) (Prospecting)

APPROVED FOR RELEASE: 06/06/2000 CIA-RDP86-00513R000103010008-8"

"APPROVED FOR RELEASE: 06/06/2000 CIA-RDP86-00513R000103010008-8

BRYLOV, S.A.; BAGDASAROV, Sh.B.

Strength of foundations of structures. Izv.vys.ucheb.zav.; geol. i razv. 1 no.6:109-116 Je '58. (MIRA 13:2)

1. Moskovskiy geologorazvedochnyy institut im.S.Ordzhonikidze.
(Foundations)

APPROVED FOR RELEASE: 06/06/2000 CIA-RDP86-00513R000103010008-8"

"APPROVED FOR RELEASE: 06/06/2000 CIA-RDP86-00513R000103010008-8

AUTHORS: Brylov, S.A. and Bagdasarov, Sh.B. 132-58-7-10/13

TITLE: Testing of Mechanical Properties of Rocks by Local Compression (Ispytaniye mekhanicheskikh svoystv gornykh porod pri mestnom szhatii)

PERIODICAL: Razvedka i okhrana nedr, 1958, Nr 7, pp 53-56 (USSR)

ABSTRACT: The study of mechanical properties of rocks is very important for various branches of science and industry. The authors propose a specially constructed press with a hydraulic compensator and a manometer. They recommend the use of plungers of various dimensions and describe the results of local compression with these plungers. There are 2 tables, 1 graph and 5 diagrams.

ASSOCIATION: MGRI

1. Rock--Mechanical properties 2. Presses--Application
3. Presses--Equipment

Card 1/1

APPROVED FOR RELEASE: 06/06/2000 CIA-RDP86-00513R000103010008-8"

"APPROVED FOR RELEASE: 06/06/2000 CIA-RDP86-00513R000103010008-8

BRYLOV, S.A.; BAGDASAROV, Sh.B.

Effect of the loading rate on the crumbling of brittle rocks in local compression. Izv.vys.ucheb.zav.;geol.i razv. 4 no.9: 108-117 S '61. (MIRA 14:9)

1. Moskovskiy geologorazvedochnyy institut imeni S. Ordzhonikidze.
(Rocks—Testing)

APPROVED FOR RELEASE: 06/06/2000 CIA-RDP86-00513R000103010008-8"

"APPROVED FOR RELEASE: 06/06/2000 CIA-RDP86-00513R000103010008-8

VERCHEBA, A.O.; BAGDASAROV, Shq.B.; BORISOV, A.N.; KULICHIKHIN, N.I., zasl. deyatel' nauki i tekhniki RSFSR, prof.; MUZYCHENKO, A.S., inzh.; RODIONOV, N.S.

[Handbook for mine foremen of prospecting parties] Spravochnik gornogo mastera geologorazvedochnykh partii. [By] A.O.Verch[redacted]. Moskva, Izd-vo "Nedra," 1964. 443 p. (MIRA 17:7)

APPROVED FOR RELEASE: 06/06/2000 CIA-RDP86-00513R000103010008-8"

"APPROVED FOR RELEASE: 06/06/2000 CIA-RDP86-00513R000103010008-8

KULICHIKHIN, N.I., prof.; BAGDASAROV, Sh.B., dots.; VERCHEBA, A.O., dots.; TIKHONOV, N.V., dots.; RAZHEV, M.M., gornyy inzh., nauchn. red.

[Boring and blasting operations, loading, timbering, mine haulage, ventilation, and drainage; second part of the course "Conducting exploratory operations"] Burovzryvnye raboty, pogruzka, kreplenie, rudnichnyi transport, ventiliatsiia i vodootliv; chast' vtoraia kursa "Provedenie razvedochnykh vyrabotok." [By] N.I.Kulichikhin i dr. Moskva, Izd-vo "Nedra," 1964. 455 p. (MIRA 17:8)

APPROVED FOR RELEASE: 06/06/2000 CIA-RDP86-00513R000103010008-8"

"APPROVED FOR RELEASE: 06/06/2000 CIA-RDP86-00513R000103010008-8

KULICHIKHIN, N.I., prof.; BAGDASAROV, Sh.B., dots.; VERCHEBA, A.O., dots.; TIKHONOV, N.V., dots.; RAZHEV, M.M., gor. inzh., nauchn. red.

[Boring and blasting operations, loading, timbering, mine haulage, ventilation, and mine drainage; second part of the course "Carrying out exploratory operations"] Burovzryvnye raboty, pogruzka, kreplenie, rudnichnyi transport, ventiliatsiia i vodootliv; chast vtoraia kursa "Provedenie razvedochnykh vyrabotok." [By] N.I.Kulichikhin i dr. Moskva, Nedra, 1964. 455 p. (MIRA 17:9)

APPROVED FOR RELEASE: 06/06/2000 CIA-RDP86-00513R000103010008-8"

"APPROVED FOR RELEASE: 06/06/2000 CIA-RDP86-00513R000103010008-8

CHUMAKOV, I.D.; BAGDASAROV, Sh.B., red.; KAIMYKOVA, I.A., ved. red.

[Means for the development of prospecting] Puti ratsionalizatsii provedeniia razvedochnykh vyrabotok. Moskva, Nedra, 1965. 122 p. (MIRA 18:3)

APPROVED FOR RELEASE: 06/06/2000 CIA-RDP86-00513R000103010008-8"

"APPROVED FOR RELEASE: 06/06/2000 CIA-RDP86-00513R000103010008-8

DAGDASAROV, S. KH.

11(4) PHASE I BOOK EXPLOITATION SOV/2124

Mezhvuzovskoye soveshchaniye po voprosam novoy tekhniki v neftyanoy promyshlennosti. Moscow, 1956

Razvedka i razrabotka neftyanykh i gazovykh mestorozhdeniy; materialy soveshchaniya, tom. 1 (Prospecting and Development of Oil and Gas Deposits; Papers of the Inter-Vuz Conference on New Techniques in the Petroleum Industry, Vol 1) Moscow, Gostoptekhizdat, 1958. 311 p. Errata slip inserted. 1,500 copies printed.

Eds.: I. M. Murav'yev, Professor, Doctor of Technical Sciences, and V. N. Dakhnov, Professor, Doctor of Geological and Mineralogical Sciences; Editorial Board: K. F. Zhigach, Professor (Resp. Ed.), I. M. Murav'yev, Professor, A. A. Tikhomirov, Candidate of Economical Sciences, V. I. Yegorov, Candidate of Economical Sciences, M. M. Charygin, Professor, F. F. Dunayev, Professor, N. I. Chernoznukov, Professor, Ye. M. Kuzmak, Professor, I. A. Charnyy, Professor, Doctor of Geological and Mineralogical Sciences, G. M. Panchenkov, Professor, V. N. Dakhnov, Professor, Doctor of Chemical Sciences, N. S. Nametkin, Doctor of Chemical Sciences, N. A. Almazov, Docent, V. N. Vinogradov, Candidate of Technical Sciences, V. I. Biryukov, Candidate of Technical Sciences, E. I. Tagiyev, and V. M. Gurevich; Executive Ed.: N. P. Dobrynina; Tech. Ed.: Z. A. Mukhina.

PURPOSE: The book is intended for engineers and scientific personnel working in the petroleum industry and vtuzes. It may also serve as a textbook for advanced students of petroleum vtuzes.

COVERAGE: The book contains articles written by staff members of the Moscow, Groznyy, and Ufa Petroleum Institutes, the Kuybyshev and Azerbaydzhan Industrial Institutes, the UFNII (Ufa Scientific Research Institute), VNIIburneft' (All-Union Scientific Research Institute of Oil Drilling), KBNP (Design Office of Petroleum Instrument Making), the Bashneft Association (Bashkiriya Petroleum). These papers, read at the Mezhvuzy (Inter-Vuz) Scientific Conference, deal with new techniques in the petroleum industry introduced since 1956. Emphasis is given to the importance of efficient drilling, geophysical prospecting, working of oil and gas deposits, and the use of new devices employed in oil and gas exploitation. There are 52 references: 44 Soviet, and 8 English.

Zhigach, K. F., L. K. Mukhin, V. N. Demishev, and N. N. Goncharov [Moscow Petroleum Institute]. Petroleum-Base Drilling Fluids 92

The authors state that petroleum-base drilling fluids are being used to open productive horizons to maintain the penetration rate at the bottom-hole zone, and to increase the well output. The use of petroleum-base drilling fluids is particularly efficient for opening formations with high permeability and low pressure, where the absorption of a large amount of mud by the productive formation may prove dangerous. Petroleum-base drilling fluids also prove useful in opening formations with low permeability, particularly where the formation contains swelling clay. Petroleum-base drilling fluids produce good results in drilling under complex geological conditions and in drilling deep and directional wells.

APPROVED FOR RELEASE: 06/06/2000 CIA-RDP86-00513R000103010008-8"

"APPROVED FOR RELEASE: 06/06/2000 CIA-RDP86-00513R000103010008-8

Ryabinkin, L. A. [Moscow Petroleum Institute]. Revision of the RNP Seismic Method and the Grouping Methods 159
The author describes the seismic RNP method recently developed at the Institute's seismic laboratory with the aid of the VNII (All-Union Research Institute) of Geophysics and passed on to the petroleum industry. He mentions the results obtained in field and laboratory testing while using a basic modification of the RNP method.

Abdullayev, R. A. [Azerbaydzhan Industrial Institute]. Precise and Approximate Methods for Interpretation of Travel-Time Curves of Reflected Waves 178
The author records several approximate and precise analytical and graphic methods for determining effective speeds with the use of travel-time curves of reflected waves.

Datskevich, A. A. [KBNP - Design Office for Petroleum Instrument Making]. Equipment of Automatic-Geophysical Field Stations 196
The author states that his KBNP office cooperates with the design offices of the Nefteprihor (Petroleum Instrument), Geofizika (Geophysics), and the Mytishchinskiy Instrument-Making Plants in manufacturing the largest amount of new industrial geophysical equipment in the petroleum industry. Because of the large demand by the industry, the volume produced by the KBNP office was inadequate and production was doubled in 1957. The KBNP has an experimental plant, a model shop, and laboratories.

Dakhnov, V. N., and A. I. Kholin [Moscow Petroleum Institute]. On the Problem of Quantitative Evaluation of Residual Oil Saturation of a Reservoir Carried Out by Radioactive Methods 209
The authors state that the determination of the type of liquid saturating the formation reservoir encased in the well presents one of the major problems for advancing the technology of petroleum exploration. Constant observation of the movements and changes in water-oil contact in all wells is essential, and the radiometric method, developed between 1953 and 1955 at Laboratory Nr 1 of the MNI (Moscow Petroleum Institute), which helps determine the type of liquid saturating the formation, answers the purpose.

Barsukov, O. A. [Moscow Petroleum Institute]. Some Theoretical Problems on Neutron Methods for Separating Oil-bearing Formations From Water-bearing Formations 218
The author refers to the experiments conducted at the MNI and other organizations which contributed to the development of methods to separate oil-bearing from water-bearing formations; he describes several physical processes that take place during neutron study methods and presents pertinent evaluating calculations.

Charnyy, I. A. [Moscow Petroleum Institute]. One of the Integral Equations of the Filtration Theory and Some of its Applications 230
The author gives a detailed description and graphic calculations of an integral equation of the filtration theory.

Belash, P. M. [Moscow Petroleum Institute]. On Equations Used for Determining Yields 248
The author shows the connection between differential equations of filtration and the equations of yields.

Pykhachev, G. B. [Groznyy Petroleum Institute]. Determining Pressure of an Oil-bearing Formation Having a Low Gas Saturation 257
The author reviews filtration in mixed liquid and gas phase formations and submits equations.

Bagdasarov, S. Kh. [Kuybyshev Industrial Institute]. The Role and Significance of A Hydraulic Seal in Exploitation of Oil Deposits 266
The author is opposed to the exploitation of new deposits with dissolved gas in petroleum production under prevailing techniques during the initial period, particularly when it is intended to correct the condition by secondary methods. This system has been responsible for depleting many old petroleum deposits (Baku, Groznyy, Krasnodar, etc.).

(9

APPROVED FOR RELEASE: 06/06/2000 CIA-RDP86-00513R000103010008-8"

"APPROVED FOR RELEASE: 06/06/2000 CIA-RDP86-00513R000103010008-8

BOGDASAROV, S.Kh.

Technology and technical processes in oil production under conditions of formation oil degassing. Trudy VNII no.25:115-121 '59. (MIRA 15:4)

1. Kuybyshevskiy industrial'nyy institut.
(Oil reservoir engineering)

APPROVED FOR RELEASE: 06/06/2000 CIA-RDP86-00513R000103010008-8"

"APPROVED FOR RELEASE: 06/06/2000 CIA-RDP86-00513R000103010008-8

BAGDASAROV, S.Kh.

Determining the optimum performance of an oil well when saturation pressure is greater than the well-bottom pressure. Azerb. neft. khoz. 39 no.5:30-32 My '60. (MIRA 13:10)
(Oil fields--Production methods)

APPROVED FOR RELEASE: 06/06/2000 CIA-RDP86-00513R000103010008-8"

"APPROVED FOR RELEASE: 06/06/2000 CIA-RDP86-00513R000103010008-8

BAGDASAROV, S.M.; MARGOLIN, S.I.; SILIN, V.S.; VAKHRUSHIN, N.P., spetsred.; GUROVA, O.A., tekhn. red.

[New machines and devices for repairing road and bridge structures] Novye mekhanizmy i prisposobleniia dlia remonta dorozhno-mostovykh sooruzhenii. Moskva, Izd-vo M-va kommun.khoz.RSFSR, 1950. 44 p. (MIRA 16:8)

1. Russia (1917- R.S.F.S.R.) Ministerstvo kommunal'nogo khozyaystva. TSentral'naya normativno-issledovatel'skaya stantsiya.

(Road machinery)

APPROVED FOR RELEASE: 06/06/2000 CIA-RDP86-00513R000103010008-8"

"APPROVED FOR RELEASE: 06/06/2000 CIA-RDP86-00513R000103010008-8

[illegible]

Municipal roads and their use
Moskva, Izd-vo Ministerstva kommunal'nogo khoziaistva RSFSR, 1952. 335 p. (53-35394)

TE250.B25

APPROVED FOR RELEASE: 06/06/2000 CIA-RDP86-00513R000103010008-8"

"APPROVED FOR RELEASE: 06/06/2000 CIA-RDP86-00513R000103010008-8

BAGDASAROV, S.M., inzhener; LANTSBERG, Yu.S., inzhener [authors]; BOLDYREV, A.F., inzhener [reviewer].

"Operation of municipal roads." S.M.Bagdasarov and Iu.S.Lantsberg. Reviewed by A.F.Boldyrev. Gor.khoz. Mosk. 27 no.7:29-31 Jl '53. (MLRA 6:7)

(Roads--Maintenance and repair)

APPROVED FOR RELEASE: 06/06/2000 CIA-RDP86-00513R000103010008-8"

"APPROVED FOR RELEASE: 06/06/2000 CIA-RDP86-00513R000103010008-8

ATOYAN, S., inzhener; BAGDASAROV, S.M., redaktor; PETROVSKAYA, Ye., tekhnicheskiy redaktor

[Use of shell limestone in asphalt concrete surfaces] Primenenie rakushechnykh izvestniakov v asfal'tobetonnykh pokrytiiakh. Moskva, Izd-vo Ministerstva kommunal'nogo khoziaistva RSFSR, 1953. 110 p. [Microfilm] (MLRA 7:10)

(Limestone) (Roads, Concrete)

APPROVED FOR RELEASE: 06/06/2000 CIA-RDP86-00513R000103010008-8"

"APPROVED FOR RELEASE: 06/06/2000 CIA-RDP86-00513R000103010008-8

BAGDASAROV, S.M., inzh.; FAYNBERG, E.S., inzh.; FALEYEV, V.G., inzh.

Industrial methods for producing surface mixes for outdoor sport facilities. Gor. khoz. Mosk. 32 no.3:27-30 Mr '58. (MIRA 11:3)
(Athletic fields)

APPROVED FOR RELEASE: 06/06/2000 CIA-RDP86-00513R000103010008-8"

"APPROVED FOR RELEASE: 06/06/2000 CIA-RDP86-00513R000103010008-8

BAGDASAROV, S.M.

GEZENTSVEY, Lev Borisovich; BAGDASAROV, S.M., red.; UCHITEL', I.Z., red. izd-va; VOLKOV, S.V., tekhn. red.

[Construction and repair of city improved roads] Stroitel'stvo i remont gorodskikh usovershenstvovannykh dorog. Moskva, Izd-vo M-va kommun. khoz. RSFSR, 1958. 281 p. (MIRA 11:7)
(Roads)

APPROVED FOR RELEASE: 06/06/2000 CIA-RDP86-00513R000103010008-8"

"APPROVED FOR RELEASE: 06/06/2000 CIA-RDP86-00513R000103010008-8

BAGDASAROV, S.M.

Communist Youth League Prospect. Gor.khoz.Mosk. 32 no.12:11-15 D '58. (MIRA 11:12)

(Moscow--Streets)

APPROVED FOR RELEASE: 06/06/2000 CIA-RDP86-00513R000103010008-8"

"APPROVED FOR RELEASE: 06/06/2000 CIA-RDP86-00513R000103010008-8

GORELYSHEV, N. V.; BAGDASAROV, S. M.; LOBZOVA, K. Ya.; LYUBAVTSEVA, T. N.; AVLASOVA, N. M.; FAYNBERG, E. S.

Laying rough-surfaced asphalt-concrete pavements. Avt. dor. 25 no.10:4-6 O '62. (MIRA 15:10)

(Pavements) (Asphalt concrete)

APPROVED FOR RELEASE: 06/06/2000 CIA-RDP86-00513R000103010008-8"

"APPROVED FOR RELEASE: 06/06/2000 CIA-RDP86-00513R000103010008-8

BAGDASAROV, S.M.

BOGDASAROV, S.M.; PLOTNIKOVA, I.A.; FAYNBERG, E.S.; FOMIN, A.I.

Acoustic method for preparing emulsions. Avt.dor. 25 no.11:12-13 N '62. (MIRA 15:12)

(Road materials)

APPROVED FOR RELEASE: 06/06/2000 CIA-RDP86-00513R000103010008-8"

"APPROVED FOR RELEASE: 06/06/2000 CIA-RDP86-00513R000103010008-8

BAGDASAROV, Sergey Mikhaylovich; LANTSBERG, Yuliy Saulovich; GEZENTSVEY, L.B., red.; DOLGOVA, K.N., red.izd-va; LELYUKHIN, A.A., tekhn. red.

[Maintenance of city streets] Ekspluatatsiia gorodskikh dorog. 2., izd. ispr. i dop. Moskva, Izd-vo M-va kommun.khoz.RSFSR, 1963. 310 p. (MIRA 16:5)
(Streets—Maintenance and repair)

APPROVED FOR RELEASE: 06/06/2000 CIA-RDP86-00513R000103010008-8"

"APPROVED FOR RELEASE: 06/06/2000 CIA-RDP86-00513R000103010008-8

SOSYANTS, V.G., inzh.; YUDIN, V.A., kand. tekhn.nauk; KNORRE, V.E., inzh.; LANTSBERG, Yu.S., inzh.; DAVIDYANTS, N.M., inzh.; GEZENTSVEY, L.B., kand. tekhn. nauk; YEGOROV, P.A., inzh.; FAYNBERG, E.S., inzh.; BAGDASAROV, S.M., inzh.; GUREVICH, L.V., kand. tekhn. nauk; CHERNYSHOV, B.G., inzh.; GADZHINSKIY, T.G., inzh.; ZASOV, I.A., kand. tekhn.nauk; BALOVNEV, V.I., kand. tekhn.nauk; GIBSHMAN, Ye.Ye., prof., red.; DZHUNKOVSKIY, N.N., prof., red.; BOLOTINA, A.V., red. izd-va; LELYUKHIN, A.A., tekhn. red.

[Manual for the design, construction, and maintenance of urban roads, bridges, and hydrotechnical structures] Spravochnik po proektirovaniiu, stroitel'stvu i ekspluatatsii gorodskikh dorog, mostov i gidrotekhnicheskikh sooruzhenii. Red. kol.E.E.Gibshman,N.N.Dzhunkovskii, P.A. Egorov. Moskva, Izd-vo M-va kommun.khoz.RSFSR. Vol.3. [Roads] Dorogi. 1963. 814 p. (MIRA 16:7)
(Roads)

APPROVED FOR RELEASE: 06/06/2000 CIA-RDP86-00513R000103010008-8"

"APPROVED FOR RELEASE: 06/06/2000 CIA-RDP86-00513R000103010008-8

BAGDASAROV, S.M., inzh.; FAYNBERG, E.S., inzh.

Laying a rough coat over worn spots in concrete surfacing.
Avt. dor. 27 no. 3:5-7 Mr '64. (MIRA 17:5)

APPROVED FOR RELEASE: 06/06/2000 CIA-RDP86-00513R000103010008-8"