"APPROVED FOR RELEASE: 06/06/2000 CIA-RDP86-00513R000103330003-8

PEREPELKIN, O.V.; CHERKASOV, L.N.; KORMER, V.A.; BAL'YAN, Kh.V.

Synthesis and properties of allene hydrocarbon derivatives. Part 1: Synthesis and properties of alkyl and arylallene alcohols. Zhur. ob. khim. 35 no.3:574-578 Mr '65. (MIRA 18:4)

1. Leningradskiy tekhnologicheskiy institut imeni Lensoveta.

APPROVED FOR RELEASE: 06/06/2000 CIA-RDP86-00513R000103330003-8"

"APPROVED FOR RELEASE: 06/06/2000 CIA-RDP86-00513R000103330003-8

CHERKASOV, L.N.; KORMER, V.A.; BAL'YAN, Kh.V.

Synthesis and properties of derivatives of allene hydrocarbons. Part 2: Synthesis and properties of carbocyclic and heterocyclic allene alcohols. Zhur. ob. khim. 35 no.4:616-619 Ap '65. (MIRA 18:5)

1. Leningradskiy tekhnologicheskiy institut imeni Lensoveta.

APPROVED FOR RELEASE: 06/06/2000 CIA-RDP86-00513R000103330003-8"

"APPROVED FOR RELEASE: 06/06/2000 CIA-RDP86-00513R000103330003-8

AVERBUKH, Anatoliy Yakovlevich; SOPOVA, Aleksandra Semenovna; BAL'YAN, Kh.V., nauchn. red.; SEGAL', Z.G., ved. red.

[What can be obtained from gas] Chto poluchaiut iz gaza. Leningrad, Nedra, 1965. 175 p. (MIRA 18:5)

APPROVED FOR RELEASE: 06/06/2000 CIA-RDP86-00513R000103330003-8

"APPROVED FOR RELEASE: 06/06/2000 CIA-RDP86-00513R000103330003-8

PEREPELKIN, O.V.; KORMER, V.A.; BAL'YAN, Kh.V.

Synthesis and properties of allene hydrocarbon derivatives. Part 3: Synthesis and properties of alkyl-, alkenyl-, and alkynylallene alcohols. Zhur. ob. khim. 35 no.6:957-959 Je '65. (MIRA 18:6)

1. Leningradskiy tekhnologicheskiy institut imeni Lensoveta.

APPROVED FOR RELEASE: 06/06/2000 CIA-RDP86-00513R000103330003-8"

"APPROVED FOR RELEASE: 06/06/2000 CIA-RDP86-00513R000103330003-8

BORISOV, Valeriy Vasil'yevich; BAL'YAN, Kh.V., prof., nauchn. red.; FEDOROVICH, N.V., nauchn. red.; UDAL'TSOV, O.A., red.

[Miracles performed without "miracles"; with addenda describing chemical experiments] Chudesa bez "chudes"; s prilozheniem opisaniia khimicheskikh opytov. Leningrad, Ob-vo "Znanie" RSFSR, 1965. 39 p. (MIRA 18:10)

APPROVED FOR RELEASE: 06/06/2000 CIA-RDP86-00513R000103330003-8

"APPROVED FOR RELEASE: 06/06/2000 CIA-RDP86-00513R000103330003-8

PEREPELKIN, O.V.; KORMER, V.A.; BAL'YAN, Kh.V.; PETROV, A.A.

Allene-acetylene rearrangement in lithium allene oxidation. Zhur. org. khim. 1 no.9:1705-1706 S '65. (MIRA 18:12)

1. Leningradskiy tekhnologicheskiy institut imeni Lensoveta. Submitted May 25, 1965.

APPROVED FOR RELEASE: 06/06/2000 CIA-RDP86-00513R000103330003-8"

"APPROVED FOR RELEASE: 06/06/2000 CIA-RDP86-00513R000103330003-8

BAL'YAN, L.G., red.; KONDRAT'YEVA, M.A., tekhn.red.

[Round timber] Lesomaterialy kruglye. Izd. ofitsial'noe. Moskva, 1957. 339 p. (MIRA 11:5)

1. Russia (1923- U.S.S.R.) Vsesoyuznyy komitet standartov. (Timber--Standards)

APPROVED FOR RELEASE: 06/06/2000 CIA-RDP86-00513R000103330003-8

"APPROVED FOR RELEASE: 06/06/2000 CIA-RDP86-00513R000103330003-8

BAL'YAN, L.G., red.; MATVEYEVA, A.Ye., tekhn.red.

[Pulp, paper, cardboard, and their use] TSelliuloza, bumaga, karton i izdeliia iz nikh. Izd.ofitsial'noe. Moskva. No.1. [Pulp and semifinished products for making paper and cardboard] TSelliuloza i polufabrikaty dlia proizvodstva bumagi i kartona. 1958. 151 p. (MIRA 12:4)

1. Russia (1923- U.S.S.R.) Vsesoyuznyy komitet standartov. (Woodpulp--Standards)

APPROVED FOR RELEASE: 06/06/2000 CIA-RDP86-00513R000103330003-8"

"APPROVED FOR RELEASE: 06/06/2000 CIA-RDP86-00513R000103330003-8

BAL'YAN, L.G., red.; MATVEYEVA, A.Ye., tekhn.red.

[Cellulose, paper, cardboard, and their use] TSelliuloza, bumaga, karton i izdeliia iz nikh. No.2 [Paper and paper products] Bumaga i bumazhnye izdeliia. Izd. ofitsial'noe. Moskva, Izd-vo Standartgiz. 1958. 526 p. (MIRA 12:2)

1. Russia (1923- U.S.S.R.) Vsesoyuznyy komitet standartov. (Paper--Standards)

APPROVED FOR RELEASE: 06/06/2000 CIA-RDP86-00513R000103330003-8"

"APPROVED FOR RELEASE: 06/06/2000 CIA-RDP86-00513R000103330003-8

BAL'YAN, L.G., red.; MATVEYEVA, A.Ye., tekhn.red.

[Canvas jackets and trousers] Kurtka i briuki muzhskie brezentovye. Izd.ofitsial'noe. Moskva, 1959. 34 p. (MIRA 13:7)

1. Russia (1923- U.S.S.R.) Vsesoyuznyy komitet standartov. (Clothing, Protective--Standards)

APPROVED FOR RELEASE: 06/06/2000 CIA-RDP86-00513R000103330003-8

"APPROVED FOR RELEASE: 06/06/2000 CIA-RDP86-00513R000103330003-8

BAL'YAN, L.G., red.; MATVEYEVA, A.Ye., tekhn.red.

[Haberdashery; net material] Galantereinye izdeliia: tiul'. Izd.ofitsial'noe. Moskva, 1959. 39 p. (MIRA 13:7)

1. Russia (1923- U.S.S.R.) Vsesoyuznyy komitet standartov. (Textile fabrics--Standards)

APPROVED FOR RELEASE: 06/06/2000 CIA-RDP86-00513R000103330003-8"

"APPROVED FOR RELEASE: 06/06/2000 CIA-RDP86-00513R000103330003-8

BAL'YAN, L.G., red.; MATVEYEVA, A.Ye., tekhn.red.

[Textile fabrics; testing methods] Tkani tekstil'nye; metody ispytanii. Izd.ofitsial'noe. Moskva, 1959. 105 p. (MIRA 13:5)

1. Russia (1923- U.S.S.R.). Vsesoyuznyy komitet standartov.
(Textile fabrics--Testing)

APPROVED FOR RELEASE: 06/06/2000 CIA-RDP86-00513R000103330003-8"

"APPROVED FOR RELEASE: 06/06/2000 CIA-RDP86-00513R000103330003-8

BAL'YAN, L.G., red.; KASHIRIN, A.G., tekhn.red.

[Paper; testing methods] Bumaga; metody ispytanii. Izd.ofitsial'noe. Moskva, 1959. 137 p. (MIRA 13:10)

1. Russia (1923- U.S.S.R.) Vsesoyuznyy komitet standartov. (Paper--Testing)

APPROVED FOR RELEASE: 06/06/2000 CIA-RDP86-00513R000103330003-8

"APPROVED FOR RELEASE: 06/06/2000 CIA-RDP86-00513R000103330003-8

BAL'YAN, L.G., red.; KONDRAT'YEVA, M.A., tekhn.red.

[Fur articles of clothing] Mekhovaia odezhda. Izd.ofitsial'noe. Moskva, 1959. 227 p. (MIRA 12:9)

1. Russia (1923- U.S.S.R.) Vsesoyuznyy komitet standartov. (Fur)

APPROVED FOR RELEASE: 06/06/2000 CIA-RDP86-00513R000103330003-8"

"APPROVED FOR RELEASE: 06/06/2000 CIA-RDP86-00513R000103330003-8

BAL'YAN, L.G., red.; MATVEYEVA, A.Ye., tekhn.red.

[Occupational and work clothing] Spetsodezhda i prozodezhda. Izd.ofitsial'noe. Moskva, Gos.izd-vo standartov. No.1. 1960. 315 p. (MIRA 13:11)

1. Russia (1923- U.S.S.R.) Vsesoyuznyy komitet standartov. (Work clothes--Standards)

APPROVED FOR RELEASE: 06/06/2000 CIA-RDP86-00513R000103330003-8

"APPROVED FOR RELEASE: 06/06/2000 CIA-RDP86-00513R000103330003-8

BAL'YAN, L., red.; MATVEYEVA, A., tekhn.red.

[Round timber] Lesomaterialy kruglye. Izd.ofitsial'noe. Moskva, Gos.izd-vo standartov, 1961. 160 p. (MIRA 14:4)

1. Russia (1923- U.S.S.R.) Vsesoyuznyy komitet standartov. (Lumber--Standards)

APPROVED FOR RELEASE: 06/06/2000 CIA-RDP86-00513R000103330003-8"

"APPROVED FOR RELEASE: 06/06/2000 CIA-RDP86-00513R000103330003-8

CHERNYSHEV, Ye.T.; CHERNYSHEVA, N.G.; CHECHURINA, Ye.N.; BAL'YAN, L., red.; KASHIRIN, A., tekhn. red.

[Magnetic measurements using alternating and direct currents] Magnitnye izmereniia na postoiannom i peremennom toke. Moskva, Standartgiz, 1962. 183 p. (MIRA 16:1)
(Magnetic measurements) (Magnetic fields)
(Electric measurements)

APPROVED FOR RELEASE: 06/06/2000 CIA-RDP86-00513R000103330003-8"

"APPROVED FOR RELEASE: 06/06/2000 CIA-RDP86-00513R000103330003-8

YUDIN, M.F.; BAL'YAN, L.G., red.; KASHIRIN, A.G., tekhn. red.

[Methods and equipment for calibrating radiation monitoring instruments]Metody i apparatura dlia graduirovki dozimetricheskikh priborov. Moskva, Standartgiz, 1962. 117 p. (MIRA 15:12)

(Radiation--Measurement)

APPROVED FOR RELEASE: 06/06/2000 CIA-RDP86-00513R000103330003-8"

"APPROVED FOR RELEASE: 06/06/2000 CIA-RDP86-00513R000103330003-8

SARKIN, Vladimir Ivanovich; YEGOROV, V.A., kand. tekhn. nauk, nauchnyy red.; BAL'YAN, L.G., red.; LAKHMAN, F.Ye., tekhn. red.

[Modern opticomechanical measuring projectors] Sovremennye optiko-mekhanicheskie izmeritel'nye proektory. Moskva, Standartgiz, 1962. 113 p. (MIRA 16:5)
(Projectors) (Optical instruments)

APPROVED FOR RELEASE: 06/06/2000 CIA-RDP86-00513R000103330003-8"

"APPROVED FOR RELEASE: 06/06/2000 CIA-RDP86-00513R000103330003-8

RUDO, Nikolay Mikhaylovich [deceased]; CHINAREV, A.I., kand. tekhn. nauk, nauchn. red.; BAL'YAN, L.G., red.; LAKHMAN, F.Ye., tekhn. red.; TIMOFEYEVA, N.V., tekhn. red.

[Laboratory balances and precise weighing] Laboratornye vesy i tochnoe vzveshivanie. Moskva, Standartgiz, 1963. 149 p. (MIRA 16:11)
(Balance) (Laboratories--Equipment and supplies)

APPROVED FOR RELEASE: 06/06/2000 CIA-RDP86-00513R000103330003-8"

"APPROVED FOR RELEASE: 06/06/2000 CIA-RDP86-00513R000103330003-8

BURDUN, Grigoriy Dmitriyevich; BAL'YAN, L.G., red.; MATVEYEVA, A.Ye., tekhn. red.

[Units of physical quantities] Edinitsy fizicheskikh velichin. Izd.3., dop. Moskva, Standartgiz, 1963. 185 p. (MIRA 16:12)

(Weights and measures) (Units)

APPROVED FOR RELEASE: 06/06/2000 CIA-RDP86-00513R000103330003-8"

"APPROVED FOR RELEASE: 06/06/2000 CIA-RDP86-00513R000103330003-8

ABRAMYAN, A.A.; ATASHYAN, S.M.; BALYAN, N.A.

Microdetermination of halides in organic compounds. Report No.2: New method for the simultaneous microdetermination of chlorine and sulfur in organic compounds containing C, H, O, Cl, S, and C, H, O, N, Cl, S. Izv. AN Arm. SSR. Khim. nauki 13 no.5:343-346 '60. (MIRA 14:2)

1. Institut organicheskoy khimii AN ArmSSR.
(Chlorine—Analysis) (Sulfur—Analysis)

APPROVED FOR RELEASE: 06/06/2000 CIA-RDP86-00513R000103330003-8"

"APPROVED FOR RELEASE: 06/06/2000 CIA-RDP86-00513R000103330003-8

BAL'YAN, M.A.

Dynamic investigation of the nitrogen balance in young children fed with ionized milk and ionized kefir in acute disorders of the gastrointestinal tract. Zhur. eksp. i klin. med. 3 no.5:63-69 '63. (MIRA 17:2)

1. Institut pediatrii AMN SSSR.

APPROVED FOR RELEASE: 06/06/2000 CIA-RDP86-00513R000103330003-8"

"APPROVED FOR RELEASE: 06/06/2000 CIA-RDP86-00513R000103330003-8

BAL'YAN, R. Kh., Eng.

Electric Current Converters

Interesting case of starting a single-armature converter, Prom. energ. 10, No. 2, 1953.

9. Monthly List of Russian Accessions, Library of Congress, May 1953. Unclassified.

APPROVED FOR RELEASE: 06/06/2000 CIA-RDP86-00513R000103330003-8"

"APPROVED FOR RELEASE: 06/06/2000 CIA-RDP86-00513R000103330003-8

BAL'YAN, R.Kh., inzhener; LUR'YE, L.S., kandidat tekhnicheskikh nauk.

Terminology of theoretical electric engineering. Elektrichestvo no.5: 84-85 My '54. (MLRA 7:6)

1. Zavod im. Kalinina MEP (for Bal'yan). 2. Vsesoyuznyy nauchno-issledovatel'skiy institut elektrifikatsii sel'skogo khozyaystva (for Lur'ye).
(Electric engineering--Terminology)

APPROVED FOR RELEASE: 06/06/2000 CIA-RDP86-00513R000103330003-8"

"APPROVED FOR RELEASE: 06/06/2000 CIA-RDP86-00513R000103330003-8

BAL'YAN, R. Kh. Cand Tech Sci -- (diss) "~~Combined Performance~~ Joint operation of Magnetic Amplifier and D-C Motor." Len, 1955. 15 pp with diagrams, 20 cm. (Min of Higher Education USSR, Len Inst of Aviation Instrument ~~Construction~~ Building), 100 copies (KL, 26-57, 19 107)

APPROVED FOR RELEASE: 06/06/2000 CIA-RDP86-00513R000103330003-8"

"APPROVED FOR RELEASE: 06/06/2000 CIA-RDP86-00513R000103330003-8

Bal'yan, R. Kh.

AID P - 2816

Subject : USSR/Electricity

Card 1/2 Pub. 27 - 5/30

Author : Bal'yan, R. Kh., Eng., Leningrad

Title : Design of a solid rotor

Periodical : Elektrichestvo, 6, 25-32, Je 1955

Abstract : The author attempts to develop a simple engineering analytical method of calculating electrical machinery with a solid ferromagnetic rotor. He also attempts: 1) to compute the instability of permeability depthwise as well as along the rotor's polar division, and 2) to obtain generalized results which permit computing an asynchronous motor as a particular case of the computation of a synchronous motor with salient poles. The nonlinearity of the magnetization curve is introduced into the equations according to L. R.Neyman. A numerical example of computation is presented and compared with experimental data. Eight diagrams,

APPROVED FOR RELEASE: 06/06/2000 CIA-RDP86-00513R000103330003-8"

"APPROVED FOR RELEASE: 06/06/2000 CIA-RDP86-00513R000103330003-8

AID P - 2816

Elektrichestvo, 6, 25-32, Je 1955

Card 2/2 Pub. 27 - 5/30

8 references (1926-1952) (7 Soviet).

Institution : None

Submitted : O 23, 1954

APPROVED FOR RELEASE: 06/06/2000 CIA-RDP86-00513R000103330003-8"

"APPROVED FOR RELEASE: 06/06/2000 CIA-RDP86-00513R000103330003-8

BAL'YAN, R.Kh. (Leningrad)

A push-pull magnetic amplifier with d.c. output. Avtom.i telem. 17 no.2:160-171 F '56. (MLRA 9:7)
(Magnetic amplifiers)

APPROVED FOR RELEASE: 06/06/2000 CIA-RDP86-00513R000103330003-8"

"APPROVED FOR RELEASE: 06/06/2000 CIA-RDP86-00513R000103330003-8

AUTHOR: Bal'yan, ~~R.Kh. (Cand.Tech.Sci)~~ SOV/110-58-10-12/24

TITLE: The design of small power-frequency transformers. (O proyektirovanii silovykh transformatorov maloy moshchnosti normal'noy chastoty)

PERIODICAL: Vestnik Elektropromyshlennosti, 1958, No.10. pp. 41-50 (USSR)

ABSTRACT: Use is being made of ribbon-type cores of cold-rolled steel to reduce the size of transformers of 1 - 1.5 kVA. Transformer cores may be of the shell, core or toroidal types and it is important to select the best type and size of core. In the Soviet Union shell-type transformers are often preferred, and the core sizes are laid down in inter-departmental standards. When the core material is changed from stampings to ribbon a number of new considerations arise. This article gives a theoretical analysis of the best geometry for small single-phase transformers operating at 50 c/s. A general relationship is given between the dimensions, cost, and output of a transformer. The characteristics of transformer economics are expressed in terms of the generally accepted concepts of specific volume, weight and cost. In small transformers, particularly those using cold-rolled steel, the iron losses are much less than the copper losses and thermal conditions in the core can be neglected. Equations are then derived to relate the transformer power and the flux density in the core. Typical magnetisation curves for transformer steels used in the calculations are given in Fig.2. Finally, expression 15 is derived for the specific economic index of the transformers. In spite

Card 1/ 4

APPROVED FOR RELEASE: 06/06/2000 CIA-RDP86-00513R000103330003-8"

"APPROVED FOR RELEASE: 06/06/2000 CIA-RDP86-00513R000103330003-8

of the apparent complication of this formula it can be represented simply and easily analysed. The way of doing this is described. For a given output, the volume, weight and cost are approximately inversely proportional to the induction, to the coefficient of filling of the core with steel and to the square root of the filling of the window with copper. The advantage obtained by using cold-rolled instead of hot-rolled steel is examined, and it is shown that the weight is reduced by a factor of 1.4. An analysis is then made of the best proportions for the core. The results obtained from the theoretical equations may need some modification in the light of practice. However, the curves in Figs. 3 - 7 show that for all types of transformers the width of the core should be about twice its thickness. For other practical reasons this ratio should never be less than 2. With cores of hot-rolled steel the width of individual sheets may be restricted by the need to keep down the number of different stampings, but this does not apply to cold-rolled cores. Optimum proportions for the cores of different types of transformer are given in Table.2. The optimum value of induction corresponds to the optimum magnetisation current derived from equation (15). Calculated magnetisation current curves for different conditions are plotted in Fig.8., and it is shown that the ratio of the no-load to the secondary current should not be greater than 0.4 - 0.6. The best induction for cold-rolled steel is

APPROVED FOR RELEASE: 06/06/2000 CIA-RDP86-00513R000103330003-8"

"APPROVED FOR RELEASE: 06/06/2000 CIA-RDP86-00513R000103330003-8

SOV/110-58-10-12/24

The design of small power-frequency transformers.

16 - 18,000 gauss and for hot-rolled steel 11,500 - 12,500 gauss, though these values may be exceeded in very small transformers. The method of selecting the best current-density is explained. Transformers of the different types are then compared and it is shown that core-and toroidal-type transformers of optimum geometry have approximately equivalent characteristics, whereas shell-type transformers, contrary to opinion common in the Soviet Union, have somewhat inferior characteristics. In order to verify the main conclusions about shell-and core-type transformers, eight were made up with cores of cold-rolled steel, four of each type, covering the power range of 6 to 100 VA. The core dimensions and test results are given in Table 3; the tests were made with different values of induction. The best value of no-load current, that gives maximum power for a given temperature rise, lies in the range 0.4 - 0.6 and the corresponding induction in the range 16,500 - 18,000 gauss, which is in good agreement with theory. The theoretical and test results are recorded in Table.4, where each column gives mean results for two similar transformers. The divergence between theory and experiment ranges from 2 - 12%. The results confirm the correctness of the conclusions about core proportions. Four toroidal transformers of similar output were also tested and gave results very similar to those for core-type transformers. The conclusions reached in the article may be used to

Card 3/4

APPROVED FOR RELEASE: 06/06/2000 CIA-RDP86-00513R000103330003-8

"APPROVED FOR RELEASE: 06/06/2000 CIA-RDP86-00513R000103330003-8

The design of small power-frequency transformers. SOV/110-58-10-12/24

design an optimum series of cold-rolled steel cores for core-type transformers. A series covering the range 1 - 1,000 VA is specified in Table.5. and is now being considered as a draft inter-departmental standard. The series is divided into groups according to the height of cores, and introduces the new principle of varying the core dimensions within the groups. There are 10 figures, 5 tables, 4 literature references (3 Soviet and 1 American)

SUBMITTED: May 26, 1958.

1. Power transformers--Design

Card 4/4

APPROVED FOR RELEASE: 06/06/2000 CIA-RDP86-00513R000103330003-8"

"APPROVED FOR RELEASE: 06/06/2000 CIA-RDP86-00513R000103330003-8

8(3) SOV/105-59-2-13/25

AUTHORS: Bal'yan, R. Kh., Candidate of Technical Sciences,
Bardinskiy, S. I., Candidate of Technical Sciences

TITLE: On the Selection of the Optimum Shape and Design of Small Transformers (K vyboru optimal'noy geometrii i konstruktsii transformatorov maloy moshchnosti)

PERIODICAL: Elektrichestvo, 1959, Nr 2, pp 53-58 (USSR)

ABSTRACT: The theoretical arguments for the optimum shape of all types of single-phase power transformers for high frequencies with immediate consideration of the heat development are set forth, and a comparison of different transformer types is given. As criteria of the optimum the dimension and weight indices per unit capacity, i.e. the specific volume and the specific weight of the transformer was used. For the theoretical analysis, the following assumptions were made: transformer capacity denotes the electromagnetic capacity; the magnetizing current is not considered; overheating the windings is assumed to be defined by the total copper and iron losses on the cooling surface, the weight G denotes the copper and iron weight, the volume V is the volume of the circumscribed parallelepiped. The formulae (10) and (12) are derived for

Card 1/3

APPROVED FOR RELEASE: 06/06/2000 CIA-RDP86-00513R000103330003-8"

"APPROVED FOR RELEASE: 06/06/2000 CIA-RDP86-00513R000103330003-8

the specific volume and the weight. They are universal and express not only the qualitative but also the quantitative relationship between the specific weights and volumes on the one hand and all the main factors effecting them, on the other. Formally, these formulae apply for any frequency f. But there is a capacity limit for each frequency below which the condition $\nu \gg 1$ can not be met (for the exorbitant rise of the magnetizing current). From the formulae (10) and (12) follows that, under otherwise equal conditions, the volume and the weight of the transformer depend exclusively upon the factors k_v and k_w. These factors determine entirely the geometrical relations of the core according to the formulae (11) and (13). Therefore they can be called the geometry factors for volume and weight. Optimum shape will be that for which k_v and k_w will attain the smallest values. $\nu = \frac{p_i}{p_c}$, p_i - iron losses, p_c - copper losses. For determining the optimum shape, for each transformer type (core, shell and toroid type transformer) the series of curves were plotted for k_v and k_w with one constant

APPROVED FOR RELEASE: 06/06/2000 CIA-RDP86-00513R000103330003-8

"APPROVED FOR RELEASE: 06/06/2000 CIA-RDP86-00513R000103330003-8

SOV/105-59-2-13/25

On the Selection of the Optimum Shape and Design of Small Transformers

and two variable dimensions (x,y,z), each. It is shown that the conditions of minimum weight do not correspond with those of minimum volume. Therefore, the optimum shape is different for both cases. The data obtained by tests permit to establish a useful system for the build-up of core series. The comparison of the three transformer types showed that the best type would theoretically be the core-type transformer. This opinion was fully confirmed by experiments. L. M. Gartkevich and A. A. Kurnukin took part in the experimental work. Somewhat earlier, A. F. Senchenkov found also by experiments that the core-type transformer is preferable to the shell-type transformer. There are 8 figures and 6 tables.

SUBMITTED: July 14, 1958

Card 3/3

APPROVED FOR RELEASE: 06/06/2000 CIA-RDP86-00513R000103330003-8"

"APPROVED FOR RELEASE: 06/06/2000 CIA-RDP86-00513R000103330003-8

BAL'YAN, R.Kh., kand.tekhn.nauk (Leningrad)

Limitations of Wiedmar's commensurability criterion for losses in power transformer windings. Elektrichestvo no.11:44-45 N '64. (MIRA 18:2)

APPROVED FOR RELEASE: 06/06/2000 CIA-RDP86-00513R000103330003-8"

"APPROVED FOR RELEASE: 06/06/2000 CIA-RDP86-00513R000103330003-8

ALAVERDYAN, O., kand.tekhn.nauk; BALYAN, S., kand.fiz.-matem.nauk

Use of ultrasonic waves for the intensification of cleaning processes of machinery parts. Prom.Arm. 5 no.1:54-58 Ja '62. (MIRA 15:2)

1. Nauchno-issledovatel'skaya stantsiya Yerevanskogo politekhnicheskogo instituta.

(Armenia--Ultrasonic waves--Industrial applications)
(Metal cleaning)

APPROVED FOR RELEASE: 06/06/2000 CIA-RDP86-00513R000103330003-8

"APPROVED FOR RELEASE: 06/06/2000 CIA-RDP86-00513R000103330003-8

BALYAN, S. A.

"Experimental investigations of the Characteristics of Ultrasound Propagation in Reacting Mixtures,"

report presented at the 6th Sci. Conference on the Application of Ultrasound in the Investigation of Matter, 3-7 Feb 1958, organized by Min of Education RSFSR and Moscow Oblast Pedagogic Inst. im N. K. Krupskaya.

APPROVED FOR RELEASE: 06/06/2000 CIA-RDP86-00513R000103330003-8"

"APPROVED FOR RELEASE: 06/06/2000 CIA-RDP86-00513R000103330003-8

AUTHORS: Balyan, S. A., Kudryavtsev, B. B. SOV/256-58-2-6/48

TITLE: Sound Propagation in a Liquid Mixture Whose Components Form a Chemical Compound (Rasprostraneniye zvuka v zhidkoy smesi, komponenty kotoroy obrazuyut khimicheskoye soyedineniye)

PERIODICAL: Nauchnyye doklady vysshey shkoly, Khimiya i khimicheskaya tekhnologiya, 1958, Nr 2, pp. 224-228 (USSR)

ABSTRACT: The sonic velocity in liquids is correlated by a certain dependence with some physical and chemical properties (Ref 1). Therefore it can be expected that the velocity of sound will anomally change in liquids whose composition, as [redacted] the title, will change too. On the curve describing the sound velocity versus composition function points are to be expected corresponding to the composition of the compound to be formed. Data in publications differ (Refs 2-6). So, the authors selected mixtures of acetic anhydride, water and ethanol because these components form a compound which either does not at all dissociate or if this occurs it forms products differing from the initial components. The velocity of sound was determined optically (Ref 7) according to the observed diffraction of light by an ultrasonic grating. Reference 1

Card 1/3

APPROVED FOR RELEASE: 06/06/2000 CIA-RDP86-00513R000103330003-8"

"APPROVED FOR RELEASE: 06/06/2000 CIA-RDP86-00513R000103330003-8

SOV/156-58-2-6/48

Sound Propagation in a Liquid Mixture Whose Components Form a Chemical Compound

shows the variation of the sonic velocity C, the density and viscosity η in a mixture of acetic anhydride and water depending on the composition. In this case all curves show a normal course marked by 2 important points: a) The anomaly of the 1. point corresponds to a maximum in the left half and does not entail chemical compounds. This climax is explained by the peculiar structure of the water. According to the writers' opinion, the maximum in curves illustrating the variation of density and viscosity goes back to the same causes. The 2. point which corresponds to a mixture of an equimolar composition is apparently caused by the formation of a compound of both components. These facts were corroborated by measurements of the 2. system: Acetanhydride-ethanol (Table 2). Based upon acoustic measurements the authors computed a correction caused by the interaction-energy of the components of mixtures. It is proportional to the molar percentage of the formed compound. The molecular sonic velocity is modified linearly by the composition of the mixture. The formation of a chemical compound composed of the mixture components does not exercise an influence on the additive proper-

Card 2/3

APPROVED FOR RELEASE: 06/06/2000 CIA-RDP86-00513R000103330003-8"

"APPROVED FOR RELEASE: 06/06/2000 CIA-RDP86-00513R000103330003-8

SOV/156-58-2-6/45

Sound Propagation in a Liquid Mixture Whose Components Form a Chemical Compound

ties of the molecular sonic velocity. There are 5 figures and 9 references, 7 of which are Soviet.

ASSOCIATION: Kafedra obshchey fiziki Moskovskogo oblastnogo pedagogicheskogo instituta
(Chair of General Physics of the Pedagogic Institute of the Moscow Oblast)

SUBMITTED: November 11, 1957

Card 3/3

APPROVED FOR RELEASE: 06/06/2000 CIA-RDP86-00513R000103330003-8"

"APPROVED FOR RELEASE: 06/06/2000 CIA-RDP86-00513R000103330003-8

AUTHORS: Kudryavtsev, B. B., Balyan, S. A. SOV/156-58-4-2/49

TITLE: Connection Between the Solution Viscosity and the Sound Velocity in the Solution (Svyaz' mezhdu vyazkost'yu zhidkosti i skorost'yu zvuka v ney)

PERIODICAL: Nauchnyye doklady vysshey shkoly. Khimiya i khimicheskaya tekhnologiya, 1958, Nr 4, pp 617-620 (USSR)

ABSTRACT: A quantitative connection is found between the solution viscosity and the sound velocity in the solution. The results are expressed in equation (6):

$$\lg\eta = A + 1/2 \lg M + 3/2 \lg T - 2/3 \lg V - 2 \lg c + B.T^{-i}.c^2 \quad (6)$$

In equation (6) (A) and (B) are constants. The connection between the viscosity and the sound velocity was investigated in 19 different liquids; it is given in figures (1) and (2). Equation (8) is suggested for the calculation of the viscosity coefficient:

$$\eta = A\varrho^{4/3}T^{1/2}\left(e^{\frac{c^2}{N.m_j.R.T}}-1\right). \quad (8)$$

It was experimentally found that between sound velocity

Card 1/2

APPROVED FOR RELEASE: 06/06/2000 CIA-RDP86-00513R000103330003-8"

"APPROVED FOR RELEASE: 06/06/2000 CIA-RDP86-00513R000103330003-8

Connection Between the Solution Viscosity and the Sound Velocity in the Solution

and temperature there exists a linear dependence:

$$c = c_0 (1 + \alpha_c . t). \qquad (12)$$

By equation (14) the authors show that between sound velocity and viscosity in the liquid the following connection exists:

$$\frac{const}{\eta} + A = B(c_0 - c) \qquad (14)$$

in which $A = \omega - V_0$ and $B = \frac{V_0}{3c_0}$.

There are 2 figures and 8 references, 3 of which are Soviet.

ASSOCIATION: Kafedra obshchey fiziki Moskovskogo oblastnogo pedagogicheskogo instituta (Chair of General Physics at the Moscow Oblast Institute of Pedagogy)

SUBMITTED: June 11, 1958

Card 2/2

APPROVED FOR RELEASE: 06/06/2000 CIA-RDP86-00513R000103330003-8"

"APPROVED FOR RELEASE: 06/06/2000 CIA-RDP86-00513R000103330003-8

Balyan, S.A.

KUDRYATSEV, B. B., and BALYAN, S. A., Laboratory for Molecular Acoustics, Moscow Oblast Institute for Pedagogics - "The relationship between viscosity and velocity of sound in a liquid"

1. Following are titles and authors of some of the papers to be presented at subject Congress:

USSR

ANAN'YEVA, A. A., Acoustics Institute, USSR Academy of Sciences, Moscow - "Barium-titanate cylindrical transducer radiating along the axis"

ANDREYEV, N. N., Acoustics Institute, USSR Academy of Sciences, Moscow - "Some questions of non-linear acoustics"

BALYAN, S. A., and KUDRYATSEV, B. B., Laboratory for Molecular Acoustics, Moscow Oblast Institute for Pedagogics - "Sound dispersion in a liquid mixture, the components of which form a chemical compound"

CHIPOVICH, L., Pavlov Institute of Physiology, USSR Academy of Sciences, Leningrad - "Mutual masking of clicks following in rapid succession and their loudness discrimination"

GERSHUNI, Grigoriy V., Pavlov Institute of Physiology, USSR Academy of Sciences, Leningrad - "On the regulation of characteristics of the auditory system"

GOL'DBERG, G. A., Acoustics Institute, USSR Academy of Sciences, Moscow - "On the statistical reverberation theory"

GOLYAMINA, I. P., Acoustics Institute, USSR Academy of Sciences, Moscow - "Study of magnetically exact sound transformers from ferrites"

GURVICH, A. S., Institute of Physics of the Atmosphere, USSR Academy of Sciences, Moscow - "Acoustic microanemometer"

ILYASHUK, Yu. N., Laboratory for Combating Noise, Institute for Labor Protection, Leningrad - "Study of the dynamic characteristics of noise measurement devices and problems of standardizing them"

KALLISTRATOVA, M. A., Institute of Physics of the Atmosphere, USSR Academy of Sciences, Moscow - "Experimental investigation of sound scattering in the atmosphere"

KRASILNIKOV, V. A., and ZABEMBO, L. K., Acoustics Institute, USSR Academy of Sciences, Moscow - "Some questions of non-linear acoustics in liquids"

KUDRYATSEV, B. B., Laboratory for Molecular Acoustics, Moscow Oblast Institute for Pedagogics - "Sound dispersion in liquids"

C O N F I D E N T I A L

Excerpts from the Program and Information Circular, reports to be submitted for the Third Intl. Congress on Acoustics, IUPAP, Stuttgart, GFR, 1-8 Sep 1959.

APPROVED FOR RELEASE: 06/06/2000 CIA-RDP86-00513R000103330003-8"

"APPROVED FOR RELEASE: 06/06/2000 CIA-RDP86-00513R000103330003-8

BALYAN, S. A., Candidate Phys-Math Sci (diss) -- "Investigation of the propagation of sound in binary liquid mixtures the components of which form a stable chemical compound". Moscow, 1959. 11 pp (Min Educ RSFSR, Moscow Oblast Pedagogical Inst im N. K. Krupskaya), 150 copies (KL, No 23, 1959, 160)

APPROVED FOR RELEASE: 06/06/2000 CIA-RDP86-00513R000103330003-8"

"APPROVED FOR RELEASE: 06/06/2000 CIA-RDP86-00513R000103330003-8

BAL'YAN, S.A.

Pollens and spores from Baku sediments of Baku Yarus Mountain (Azerbaijan S.S.R.). Izv. AN Arm.SSR. Geol.i geog.nauki 16 no.4/5: 3-8 '63. (MIRA 16:12)

1. Institut geologicheskikh nauk AN Armyanskoy SSR.

APPROVED FOR RELEASE: 06/06/2000 CIA-RDP86-00513R000103330003-8"

"APPROVED FOR RELEASE: 06/06/2000 CIA-RDP86-00513R000103330003-8

BALYAN, S. P.

23026 O proiskhoshdenii gory aragats v svete novykh morfologicheskikh dannykh. Izvestiya (akad. Nauk arm. ssr), Fiz. - matem., estestv. I tekhn. Nauki, 1949, No. 1, C. 53-60, - rezyume na arm. Yaz. - Bibliogr: 12 nazv.

SO: LETOPIS' NO. 31, 1949

APPROVED FOR RELEASE: 06/06/2000 CIA-RDP86-00513R000103330003-8"

"APPROVED FOR RELEASE: 06/06/2000 CIA-RDP86-00513R000103330003-8

BAL'YAN, S. P.

USSR/Geophysics - Armenian Strata Jan/Feb 52

"Problem Concerning the Age and Genesis of the Vokhchaberdsk Strata," N. V. Dumitrashko, S. P. Bal'yan

"Iz Ak Nauk SSSR, Ser Geol" No 1, pp 115-121

Considers the problem concerning the age of the vulcanic rocks composing the Armenian mountains on the basis of data resulting from studies of the Bokhchaberd strata. Conclude that these strata relate to the Pliocene.

205T70

APPROVED FOR RELEASE: 06/06/2000 CIA-RDP86-00513R000103330003-8"

"APPROVED FOR RELEASE: 06/06/2000 CIA-RDP86-00513R000103330003-8

ASLANYAN, A.T.; BAL'YAN, S.P.

Traces of Lower Quaternary glaciation in Armenia. Biul.MOIP, Otd. geol. 28 no.6:73-74 '53. (MLRA 6:12)
(Armenia--Glacial epoch) (Glacial epoch--Armenia)

APPROVED FOR RELEASE: 06/06/2000 CIA-RDP86-00513R000103330003-8"

"APPROVED FOR RELEASE: 06/06/2000 CIA-RDP86-00513R000103330003-8

GABRIYELYAN, A.A.; ISAKHANYAN, D.P.; ADAMYAN, A.I.; BAL'YAN, S.P.

Stratigraphy of upper Tertiary volcanogenous strata of the Karabakh Upland. Nauch.trudy Erev.un. 52:3-23 '55. (MLRA 9:9)

1. Kafedra istoricheskoy geologii i paleontologii.
(Karabakh Upland--Geology, Stratigraphic)

APPROVED FOR RELEASE: 06/06/2000 CIA-RDP86-00513R000103330003-8"

"APPROVED FOR RELEASE: 06/06/2000 CIA-RDP86-00513R000103330003-8

BALYAN, S.P.; VEGUNI, V.T.

Paleogeography of the Lake Sevan Basin and new prospects for the use of Lake Sevan water resources [in Armenian with summary in Russian]. Nauch. trudy Erev. un. 63:105-116 '58. (MIRA 11:6)

1. Yerevanskiy gosudarstvennyy universitet, kafedra fizicheskoy geografii.

(Sevan, Lake--Water resources development)
(Sevan region--Paleogeography)

APPROVED FOR RELEASE: 06/06/2000 CIA-RDP86-00513R000103330003-8"

"APPROVED FOR RELEASE: 06/06/2000 CIA-RDP86-00513R000103330003-8

LYUBIN, V.P.; BALYAN, S.P.

Recent finds of paleolithic culture on the volcanic upland of the Armenian S.S.R. Dokl. AN Arm. SSR 33 no.2:67-72 '61. (MIRA 14:10)

1. Institut material'noy kul'tury i arkheologii AN SSSR i Yerevanskiy gosudarstvennyy universitet. Predstavleno chlenom-korrespondentom AN Armyanskoy SSR A.A. Gabriyelyanom.
(Armenia--Stone implements)

APPROVED FOR RELEASE: 06/06/2000 CIA-RDP86-00513R000103330003-8

"APPROVED FOR RELEASE: 06/06/2000 CIA-RDP86-00513R000103330003-8

DUMITRASHKO, N.V.; LILIYENBERG, D.A.; ANTONOV, B.A.; BALIYAN, S.P.; BUDAGOV, B.A.; KOVALEV, P.V.; TSERETELI, D.V.

Ancient glaciations of the Caucasus and their correlation with the glaciation of the East European Plain. Trudy Kom. chetv.per. 19:170-180 '62. (MIRA 16:1)

(Caucasus--Glacial epoch)
(East European Plain--Glacial epoch)

APPROVED FOR RELEASE: 06/06/2000 CIA-RDP86-00513R000103330003-8"

"APPROVED FOR RELEASE: 06/06/2000 CIA-RDP86-00513R000103330003-8

MKRTCHYAN, S.S., akademik, glav. red.; VARDANYANTS, L.A., red.; GABRIYELYAN, A.A., red.; MAGAK'YAN, I.G., akademik, red.; PAFFENGOL'TS, K.N., akademik, red.; DUMITRASHKO, N.V., doktor geogr. nauk, otv. red.; BAGDASARYAN, A.G., doktor geogr. nauk, red.; BAL'YAN, S.P., kand. geogr. nauk, red.; ZOGRABYAN, L.N., kand. geogr. naukKHACHATRYAN, E.A., red. izd-va; KAPLANYAN, M.A., tekhn. red.

[Geology of the Armenian S.S.R.]Geologiia Armainskoi SSR. Glav.red.S.S.Mkrtchian (glav.red.) i dr. Erevan, Izd-vo AN Armianskoi SSR. Vol.1. [Geomorphology]Geomorfologiia. 1962. 430 p. map. (MIRA 15:10)

1. Akademiya nauk Armyanskoy SSR, Erivan. Institut geologicheskikh nauk. 2. Akademiya nauk Armyanskoy SSR (for Mkrtchyan, Magak'yan, Paffengol'ts). 3. Chlen-korrespondent Akademii nauk Armyanskoy SSR (for Vardanyants, Gabriyelyan). (Armenia—Geomorphology)

APPROVED FOR RELEASE: 06/06/2000 CIA-RDP86-00513R000103330003-8

"APPROVED FOR RELEASE: 06/06/2000 CIA-RDP86-00513R000103330003-8

BAL'YAN, S.P.

Recent data on the ancient glaciation of Armenia. Dokl. AN Arm. SSR 36 no.3:179-182 '63. (MIRA 16:10)

1. Yerevanskiy gosudarstvennyy universitet. Predstavleno akademikom AN Armyanskoy SSR S.S. Mkrtchyanom.

APPROVED FOR RELEASE: 06/06/2000 CIA-RDP86-00513R000103330003-8"

"APPROVED FOR RELEASE: 06/06/2000 CIA-RDP86-00513R000103330003-8

ARAKELYAN, R.A.; VEGUNI, A.T.; BAL'YAN, S.P.; SAYADYAN, Yu.V.; ASRATYAN, V.P.; BAGDASARYAN, G.P.; MALKHASYAN, E.G.; ARUTYUNYAN, A.R.; ARUTCHYAN, A.G., red.; ASLANYAN, A.T., red.; GOGINYAN, V.Y., red.; GULYAN, E.Kh., red.; KAZARYAN, S.V., red.; MKRTCHYAN, K.A., red.; TSAMERYAN, P.P., red.

[Study of the geology of the U.S.S.R.] Geologicheskaia izuchennost' SSSR. Erevan, Izd-vo AN Arm. SSR Vol.48. No.1. 1964. 157 p. (MIRA 18:6)

APPROVED FOR RELEASE: 06/06/2000 CIA-RDP86-00513R000103330003-8

"APPROVED FOR RELEASE: 06/06/2000 CIA-RDP86-00513R000103330003-8

BALIYAN, [illegible]

Morphological analysis of the structure of the Armenian Highland. Izv. AN Arm. SSR. Nauki o zem. 18 no.3/4:75-94 '65. (MIRA 18:9)

1. Yerevanskiy gosudarstvennyy universitet.

APPROVED FOR RELEASE: 06/06/2000 CIA-RDP86-00513R000103330003-8"

"APPROVED FOR RELEASE: 06/06/2000 CIA-RDP86-00513R000103330003-8

BAL'YAN, S.V.

CA

3

The temperature-entropy and heat content-entropy diagrams for benzene. S. V. Bal'yan. *J. Applied Chem.* (U. S. S. R.) 13, 1189-8(1940).—The above diagrams were constructed on the basis of the calcd. heat of evapn. and a heat capacity at a const. pressure (assumed equal to that at the b. p.) (both by the formulas proposed by Flock, *et al.* (*C. A.* 25, 3553)). The entropy of C_6H_6 increased with decrease in temp. at intervals 0-72° and 207-290° and decreased with decrease in temp. at 72-267°. This phenomenon is attributed to the fact that the heat capacity of dry satd. vapor of benzene is neg. at 0-72° and 267-290°. Literature references since 1847.

A. A. Podgorny

ASM-SLA METALLURGICAL LITERATURE CLASSIFICATION

APPROVED FOR RELEASE: 06/06/2000 CIA-RDP86-00513R000103330003-8"

"APPROVED FOR RELEASE: 06/06/2000 CIA-RDP86-00513R000103330003-8

BAL'YAN, S.V.

PROCESSES AND PROPERTIES INDEX

CA

2

The nomograms i_t (heat content vs. concentration) and s_t (entropy vs. concentration) for benzene-water vapor. S. V. Bal'yan. *J. Applied Chem.* (U. S. S. R.) 13, 1617-19(1940); cf. *C. A.* 35, 3053[1].—The construction of nomograms is described and the nomograms are presented.
A. A. Podgorny

ASM-SLA METALLURGICAL LITERATURE CLASSIFICATION

APPROVED FOR RELEASE: 06/06/2000 CIA-RDP86-00513R000103330003-8"

"APPROVED FOR RELEASE: 06/06/2000 CIA-RDP86-00513R000103330003-8

CA

BAL'YAN, S.V.

Thermodynamic characteristics of C_2H_2. S. V. Bal'yan. *J. Chem. Ind.* (U. S. S. R.) 18, No. 17, 12-18(1941).—The best values for the important thermodynamic consts. of C_2H_2 are selected and equations are developed for their calcn.

V

METALLURGICAL LITERATURE CLASSIFICATION

APPROVED FOR RELEASE: 06/06/2000 CIA-RDP86-00513R000103330003-8"

"APPROVED FOR RELEASE: 06/06/2000 CIA-RDP86-00513R000103330003-8

BALYAN, S.V.

Ca

10

PROCESSES AND PROPERTIES INDEX

Decomposition of Dowtherm A on heating to 550
S. V. Bal'yan. *J. Applied Chem.* (U.S.S.R.) 18, 420-
(1945).—It was shown that Dowtherm A undergoes ex
tensive decomps. at high temps. The following substances
(in %) were isolated after 552° heat treatment in a bomb
(compn. of bomb not given): water 1.2, benzene 5.8,
PhOH 5.2, phenolic residues 2.1, Ph_2-PhOPh mixt. 21.6,
mixed liquids (contg. Ph_2O, terphenyl, etc.) 15.6, asphal-
tites 10.6, coke 36.0. Temp.-pressure curves at various
temps. are also given. G. M. Kosolapoff

ASM-SLA METALLURGICAL LITERATURE CLASSIFICATION

APPROVED FOR RELEASE: 06/06/2000 CIA-RDP86-00513R000103330003-8"

"APPROVED FOR RELEASE: 06/06/2000 CIA-RDP86-00513R000103330003-8

24(8); 26(6) PHASE I BOOK EXPLOITATION SOV/1740

Bal'yan, Sarkis Vaganovich

Tekhnicheskaya termodinamika i teplovyye dvigateli (Engineering Thermodynamics and Heat Engines) Moscow, Mashgiz, 1958. 454 p. 20,000 copies printed.

Reviewers: A.S. Yastrzhembskiy, Doctor of Technical Sciences, Professor, and I.N. Kirsanov, Candidate of Technical Sciences, Docent; Ed.: V.I. Gribanov, Candidate of Technical Sciences, Docent; Ed. of Publishing House: Ye.K. Gofman; Tech. Ed.: L.V. Sokolova; Managing Ed. for Literature on the Design and Operation of Machinery (Leningrad Division, Mashgiz): F.I. Fetisov, Engineer.

PURPOSE: This book is approved by the Ministry of Higher Education of the USSR as a textbook for students of higher educational institutions not specializing in power engineering.

COVERAGE: This book covers the material of the course entitled "Engineering Thermodynamics and Heat Engines" special field of "Heat-Gas-Supply and Ventilation." It is subdivided into two parts: engineering thermodynamics, and heat engines. The introduction pre-

Card 1/19

APPROVED FOR RELEASE: 06/06/2000 CIA-RDP86-00513R000103330003-8"

"APPROVED FOR RELEASE: 06/06/2000 CIA-RDP86-00513R000103330003-8

sents an outline history of the development of thermodynamics and heat engines and gives the names of Russian scientists and designers in this field from the 18th century to the present time. The following contemporary personalities are mentioned: A.A. Mikulinin, V.Ya. Klimov, A.P. Shvetsov, B.S. Stechkin, N.R. Briling. The following plants are mentioned: Russkiy Dizel' (Russian Diesels, 1899), Kolomna "Krasnoye Sormovo," and "Dvigatel' Revolyutsii, Chelyabinsk Tractor Plant, Moscow Automobile Plant imeni Likhachev, and the Gor'kiy Automobile Plant. The author states that in 1955 a turbine of 150,000 kw, and steam parameters of 170 atm, 550°C, was put into operation. Plans exist to produce turbines in the next five year plan of still higher power, i.e., with initial gas parameters of 90 atm, and 535°C, and 130 atm and 565°C. Turbines of 200,000 kw, and 300,000 kw, and gas parameters of 200-240, and 300 atm, and temperatures of 580°C and 650°C, are also planned. The book states that special attention is being given to the development of gas turbines in the USSR. At the present time, stationary gas turbines are built at the Nevskiy zavod imeni Lenina (Nevskiy Plant imemi Lenin in Leningrad) and LMZ imeni Stalina (Leningrad Metalworking Plant). Other plants produce stationary gas turbines according to the designs of the two above-mentioned plants. There are 22 Soviet references.

APPROVED FOR RELEASE: 06/06/2000 CIA-RDP86-00513R000103330003-8

"APPROVED FOR RELEASE: 06/06/2000 CIA-RDP86-00513R000103330003-8

S/114/62/000/009/003/003
E194/E435

AUTHOR: Bal'yan, S.V., Candidate of Technical Sciences, Docent

TITLE: The thermodynamic characteristics of diphenyl mixture

PERIODICAL: Energomashinostroyeniye, no.9, 1962, 38-40

TEXT: Diphenyl mixture is a high-boiling point organic heat transfer medium, also known as Dowtherm A, and consists of 26.5% wt diphenyl and 73.5% wt diphenyl oxide. The mixture has a critical pressure of 41 atm and a critical temperature of 528°C. Thermodynamic properties of the mixture were calculated from published data and knowledge of the composition, the formulae used being stated. The properties of diphenyl oxide above 426.7°C were obtained by extrapolation. The results are plotted in the following graphs covering the temperature range up to 550°C: specific heat of liquid diphenyl mixture as function of temperature; heat of vaporization of diphenyl mixture as function of temperature; specific heat of super-heated vapour of diphenyl mixture as function of temperature and pressure for pressures up to 35 atm; ts-diagram for various pressures up to 35 atm; ti-diagram for various pressures up to 35 atm. From the upper part of the

Card 1/2

APPROVED FOR RELEASE: 06/06/2000 CIA-RDP86-00513R000103330003-8"

"APPROVED FOR RELEASE: 06/06/2000 CIA-RDP86-00513R000103330003-8

ts-diagram it is noted that, contrary to what is the case with steam, on reducing the temperature of dry saturated vapour of diphenyl mixture its entropy falls which means that, on raising the temperature of the dry saturated vapour, heat has to be added to maintain it saturated whereas in the case of steam the heat would have to be abstracted. There are 5 figures.

APPROVED FOR RELEASE: 06/06/2000 CIA-RDP86-00513R000103330003-8"

"APPROVED FOR RELEASE: 06/06/2000 CIA-RDP86-00513R000103330003-8

BALYAN, V.P.

Comparative experiment with spring, hairy, and Hungarian vetch at Kalinino [in Armenian with summary in Russian]. Izv.AN Arm.SSR. Biol.i sel'khoz.nauki 6 no.1:83-88 '53. (MLRA 9:8)
(Kalinino (Armenia)--Vetch)

APPROVED FOR RELEASE: 06/06/2000 CIA-RDP86-00513R000103330003-8"

"APPROVED FOR RELEASE: 06/06/2000 CIA-RDP86-00513R000103330003-8

Country : USSR
CATEGORY :

ABS. JOUR. : RZBiol., No. 19 1958, No. 87106

AUTHOR : Bulyan, V. P.
INST. : Armenian Scientific Research Institute of
TITLE : Culture Trials of Trifolium canescens W.

ORIG. PUB. : Byul. nauchno-tekhn. inform. Arm. n.-i. in-ta zhivotnovodstva i veterinarii, 1957,

ABSTRACT : Studies of wild clovers of Armenia at the Loriyskoy experiment station of the Armenian Institute of Animal Husbandry and Veterinary Medicine, have shown that Trifolium canescens W. can be recommended as the second or third leguminous component of grass mixtures for reseeding of the ranges in the grassland-steppe belt. The highest yield was obtained on the third year of life; the seeds are formed beginning with the third year of life and their highest yield was obtained during the fourth year of life. -- A. A. Shchibrya.

CARD: 1/1 Animal Husbandry and Veterinary Medicine.
No. 1 15 16

APPROVED FOR RELEASE: 06/06/2000 CIA-RDP86-00513R000103330003-8"

"APPROVED FOR RELEASE: 06/06/2000 CIA-RDP86-00513R000103330003-8

BALYAN, V.P., kand.sel'skokhozyaystvennykh nauk

Changes in germinative qualities of the seeds of wild red clovers of Armenia under cultivation. Trudy Arm. nauch.-issl. inst.zhiv. i vet. 4:185-190 '60. (MIRA 15:5)

(Armenia--Red clover)

APPROVED FOR RELEASE: 06/06/2000 CIA-RDP86-00513R000103330003-8"

"APPROVED FOR RELEASE: 06/06/2000 CIA-RDP86-00513R000103330003-8

BAL'YANK Roblen Khorenovich; MEYERSON, I.G., kand. tekhn. nauk, retsenzent; SMIRNOV, Yu.I., red. ; SHISHKOVA, L.M., tekhn. red.

[Low power transformers] Transformatory maloi moshchnosti. Leningrad, Gos. soiuznoe izd-vo sudostroit. promyshl., 1961. 366 p. (MIRA 14:10)

(Electric transformers)

APPROVED FOR RELEASE: 06/06/2000 CIA-RDP86-00513R000103330003-8"

"APPROVED FOR RELEASE: 06/06/2000 CIA-RDP86-00513R000103330003-8

BAL[illegible]IN, D. A.; LA[illegible], V. [illegible]; [illegible]

"About One Case of Abnormally Rapid Depletion of Dinas Brick in the Crown of an Open Hearth Furnace." Iz. Ak. Nauk SSSR, Otdel. Tekh. Nauk, No. 1-2, 1944.

FDD Report U-1556, 14 Nov., 1951

APPROVED FOR RELEASE: 06/06/2000 CIA-RDP86-00513R000103330003-8"

"APPROVED FOR RELEASE: 06/06/2000 CIA-RDP86-00513R000103330003-8

Balyanov, P.D.

3-9-11/31

AUTHOR: Balyanov, P.D., Dotsent, Deputy Director of the Moscow Textile Institute

TITLE: Tasks Formulated in the "Directive I-100" Must be Solved More Energetically (Aktivneye reshat' zadachi postavlennyye "pis'mom I-100") Greater Creative Effort is Required of the Collective (Nuzhna bol'shaya tvorcheskaya rabota kollektiva)

PERIODICAL: Vestnik Vysshey Shkoly, 1957, # 9, pp 49 - 55 (USSR)

ABSTRACT: The author describes the instructions of "Letter I-100" as they have been carried out at the Moskva Institute of Textiles. Discussions and measures relating to the improvement of the educational process were made in close collaboration of Party and social organizations.

Much attention was given to the question of student independent work. For this purpose some classes were transferred to independent study and laboratory consultations were organized. On the whole, results have been satisfactory.

The next stage was the reorganization of the teaching plan and its confirmation. The amount of compulsory work was reduced and some deficiencies of previous plans eliminated. This method permitted spare time for independent work. Parallel work was eliminated in particular in subjects of industrial organization and general scientific and engineering disciplines.

The teaching methods of foreign languages are an important

Card 1/3

APPROVED FOR RELEASE: 06/06/2000 CIA-RDP86-00513R000103330003-8"

"APPROVED FOR RELEASE: 06/06/2000 CIA-RDP86-00513R000103330003-8

Tasks Formulated in the "Directive I-100" Must be Solved More Energetically. Greater Effort is Required of the Collective.

problem. In the opinion of the author, students must begin the translation of technical literature during the first course and must also practice conversation. The author does not approve compulsory physical education and suggests dropping this subject.

In the second part of his article the author deals with the organization of independent work.

Some teachers did not approve of the regulation of independent working hours but the author states that if operated properly, this method might work well. It requires a supply of instructive literature, printed lectures, organized laboratory work, seminars and consultations which many chairs have already introduced.

The various grades must be reorganized. At the Moskva Institute of Textiles, the number of "excellent" and "good" grades was reduced, while the number "satisfactory" grades increased.

There must also be an improvement in the examinations. Students having continuously bad grades must be eliminated: the marks obtained during examinations must not be taken into consideration.

APPROVED FOR RELEASE: 06/06/2000 CIA-RDP86-00513R000103330003-8"

"APPROVED FOR RELEASE: 06/06/2000 CIA-RDP86-00513R000103330003-8

3-9-11/31

Tasks Formulated in the "Directive I-100" Must be Solved More Energetically. Greater Effort is Required of the Collective.

The author suggests that confirmation of the teaching program be made by the vuz directors and not by the ministry, since this seems to be only a formality which should be dealt with in the vuzes.

ASSOCIATION: Moskovskiy tekstil'nyy institut (Moscow Textile Institute)

AVAILABLE: Library of Congress

Card 3/3

APPROVED FOR RELEASE: 06/06/2000 CIA-RDP86-00513R000103330003-8

"APPROVED FOR RELEASE: 06/06/2000 CIA-RDP86-00513R000103330003-8

BALYANSKAYA, G. Z.

YEVDOKIMOV, Aleksandr Ivanovich, prof.; BALYANSKAYA, G.Z., red.; ROMANOVA, Z.A., tekhn. red.

[What you should know about children's teeth] Chto nado znat' o zubakh detskogo vozrasta. Moskva, Gos. izd-vo med. lit-ry, 1956. 20 p. (MIRA 11:7)

(TEETH)

APPROVED FOR RELEASE: 06/06/2000 CIA-RDP86-00513R000103330003-8

"APPROVED FOR RELEASE: 06/06/2000 CIA-RDP86-00513R000103330003-8

BALYANSKAYA, G.Z.

Treatment of periodontosis. Sov. med. 27 no.8:127-131 Ag '64. (MIRA 18:3)

1. 18-ya stomatologicheskaya poliklinika (glavnyy vrach G.Z. Balyanskaya, nauchnyy rukovoditel' - prof. A.I. Yevdokimov), Moskva.

APPROVED FOR RELEASE: 06/06/2000 CIA-RDP86-00513R000103330003-8"

"APPROVED FOR RELEASE: 06/06/2000 CIA-RDP86-00513R000103330003-8

ACC NR: AT6034603 (N) SOURCE CODE: UR/3232/66/000/003/0028/0035

AUTHOR: Balyas, I. N.; Kirianaki, N. V.

ORG: none

TITLE: Synthesis of optimum contact decoder circuits for instruments with standard time measures and PT digital projection displays

SOURCE: L'vov. Politekhnicheskiy institut. Kontrol'no-izmeritel'naya tekhnika, no. 3, 1966, 28-35

TOPIC TAGS: digital decoder, system reliability, optimal automatic control, flip flop circuit

ABSTRACT: Among the multitude of luminous indicators differing both in design and principle only digital projection displays and front-illuminated displays can give images of symbols of the most varied configuration, greatest clarity and correctness of form, of any size, and of the necessary hue and brightness. In PT displays digit size may vary from 30 to 200 mm depending on distance between display and screen, the background may be formed by colored light, etc. Decoders and control devices are provided for correct operation of the digital display instrument, as well as for converting the code used in forming the counting decades of the multiunit pulse counter into the code controlling the operation of the digital display. These devices consist of various contact and contactless elements, which in may cases are intolerably numer-

Card 1/2

APPROVED FOR RELEASE: 06/06/2000 CIA-RDP86-00513R000103330003-8

"APPROVED FOR RELEASE: 06/06/2000 CIA-RDP86-00513R000103330003-8

ACC NR: AT6034603

ous, thus impairing reliability and entailing breakdowns, increase in size, greater expense, etc. Therefore digital instruments with standard time measures hardly use contact elements in the decoder circuits. Therefore an urgent problem is to synthesize optimum decoder circuits which require one switching contact each from each flip-flop of the multiunit pulse counter and the minimum number of semiconducting devices. The paper proposes circuits of obvious merit which is even clearer when there are shock loads. The closing contacts are series-connected; the opening contacts, in parallel. The windings of all relays binary position are connected in the collector circuit of a P-201A transistor which may be replaced by a P-16B if the number of relays is doubled or tripled. Tests confirm that the proposed circuits gave trouble-free operation of up to 3200 hr. Orig. art. has: 14 formulas and 3 figures.

SUB CODE: 09,13/SUBM DATE: none/ ORIG REF: 003

Card 2/2

APPROVED FOR RELEASE: 06/06/2000 CIA-RDP86-00513R000103330003-8

"APPROVED FOR RELEASE: 06/06/2000 CIA-RDP86-00513R000103330003-8

ACC NR: AT6034604 (N) SOURCE CODE: UR/3232/66/000/003/0036/0041

AUTHOR: Balyas, I. N.; Kirianaki, N. V.

ORG: none

TITLE: Synthesis of optimum contact decoder circuits for IN-type digital indicators for time standard equipment

SOURCE: L'vov. Politekhnicheskiy institut. Kontrol'no-izmeritel'naya tekhnika, no. 3, 1966, 36-41

TOPIC TAGS: digital decoder, circuit design, computer circuit

ABSTRACT: The authors analyze various configurations of relay- and diode-based binary-to-decimal code decoders. An optimal configuration (one with a minimum number of elements) for use in time standard equipment is found (see Fig. 1). The IN-1 digital counter display tube used in this curcuit requires only 0.14—0.6 w and will operate in the -60—+70C temperature range. The decoder was designed specifically for the 1242' code. The same synthesis methods may be used, however, to find the optimum decoders for other codes. The relays may be either of the neutral or the polar type. To protect the equipment against shock and impacts the number of relays for each bit should be increased. Tests show, however, that as the number of relays bit is increased from one to two to three the amount of time that elapses before the first failure for three decoders, decrease from 2875, 2580, and 2340 hours respectively.

Card 1/2

APPROVED FOR RELEASE: 06/06/2000 CIA-RDP86-00513R000103330003-8"

"APPROVED FOR RELEASE: 06/06/2000 CIA-RDP86-00513R000103330003-8

ACC NR: AT6034604

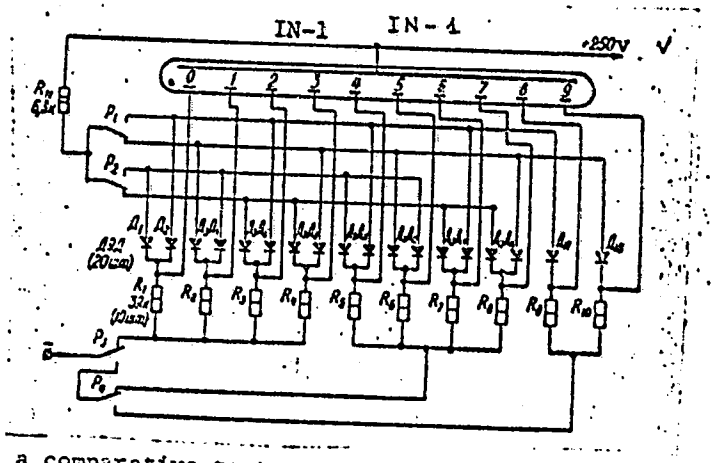

Fig. 1.

In a comparative test, a contactless decoder circuit of the same type operated 2960 hours before the first failure occurred. Orig. art. has: 2 figures and 8 formulas.

SUB CODE: 09/ SUBM DATE: none/ ORIG REF: 003/

Card 2/2

APPROVED FOR RELEASE: 06/06/2000 CIA-RDP86-00513R000103330003-8"

"APPROVED FOR RELEASE: 06/06/2000 CIA-RDP86-00513R000103330003-8

L 39930-66 EWT(d)/EWP(k)/EWP(h)/EWP(1)/EWP(v) BC/GD

ACC NR: AT6017136 SOURCE CODE: UR/0000/65/000/000/0177/0179

52

B+1

AUTHOR: Balyasinski, V.

ORG: Faculty of Mathematical Machines, Warsaw Polytechnic Institute (Kafedra matematicheskikh mashin, Varshavskogo Politekhnicheskogo instituta)

TITLE: Use of small digital computers in process control systems 14

SOURCE: Sovet ekonomicheskoy vzaimopomoshchi. Postoyannaya komissiya po koordinatsii nauchnykh i tekhnicheskikh issledovaniy. Sredstva i metody mekhanizatsii podgotovki i poiska nauchno-tekhnicheskoy informatsii, inzhenernogo i upravlencheskogo truda (Means and methods for mechanizing the preparation and research of scientific and technical information and of engineering and control work); lektsii, prochitannyye na vystavke "Inforga-65" v maye-iyune 1965 g. Moscow, 1965, 177-179

TOPIC TAGS: computer control system, control theory, digital computer, computer memory, magnetic drum / AMC digital computer

ABSTRACT: The AMC special purpose digital computer is described. The AMC computer has a high speed memory of 100 48-bit words (to be increased to 400 wds) and a basic magnetic drum memory with a capacity of 9900 words; access time of 10 μsec. An automatic input-output device processes characters from punched tape at the rate of 500 per min. A punched card input device processes 400 cards a min. A line print-out

Card 1/2

APPROVED FOR RELEASE: 06/06/2000 CIA-RDP86-00513R000103330003-8"

"APPROVED FOR RELEASE: 06/06/2000 CIA-RDP86-00513R000103330003-8

L 39930-66

ACC NR: AT6017136

unit has a capacity of 800 lines a minute. The article also sets forth the basic contours of a computer-based process control system and lists the elements (computer, magnetic tape, punched cards, printers, input-output device, etc.) which comprise such a system.

SUB CODE: 09/ SUBM DATE: none

Card 2/2

APPROVED FOR RELEASE: 06/06/2000 CIA-RDP86-00513R000103330003-8

"APPROVED FOR RELEASE: 06/06/2000 CIA-RDP86-00513R000103330003-8

BALYASINSKIY, E.A.

Improve the sound insulation of walls in apartment buildings and the mechanical installations in stores. Gor.khoz.Mosk.29 no.9:7 S '55. (MLRA 8:12)

1. Inspektsiya Gosudarstvennogo arkhitekturno-stroitel'nogo kontrolya g.Moskvy

(Soundproofing)

APPROVED FOR RELEASE: 06/06/2000 CIA-RDP86-00513R000103330003-8

"APPROVED FOR RELEASE: 06/06/2000 CIA-RDP86-00513R000103330003-8

GUDIMENKO, Fedor Isidorovich[Hudymenko, F.S.], dots.; PAVLYUK, Ivan Adamovich; VOLKOVA, Valentina Aleksandrovna; BALYASNA, O.Ye., red.; KHOKHANOVSKAYA, T.I.[Khokhanovs'ka, T.I.], tekhn. red.

[Collection of problems on differential equations]Zbirnyk zadach z dyferentsial'nykh rivnian'. Za red. F.S.Hudymenka. Kyiv, Vyd-vo Kyivs'koho univ., 1962. 166 p. (MIRA 15:9)
(Differential equations—Problems, exercises, etc.)

APPROVED FOR RELEASE: 06/06/2000 CIA-RDP86-00513R000103330003-8"

"APPROVED FOR RELEASE: 06/06/2000 CIA-RDP86-00513R000103330003-8

PUTYATA, Vsevolod Iosifovich; SIDLYAR, Mikhail Makarovich; FIL'CHAKOV, P.F., doktor fiz.-mat. nauk, retsenzent; BALYASNA, O.Ye. [Baliasna, O.IE.], red.; KHOKHANOVSKAYA, T.I. [Khokhanovs'ka, T.I.], tekhn. red.

[Hydroaeromechanics] Gidroaeromekhanika. Kyiv, Vyd-vo Kyivs'-kogo univ. 1963. 479 p. (MIRA 16:7)
(Fluid mechanics)

APPROVED FOR RELEASE: 06/06/2000 CIA-RDP86-00513R000103330003-8

"APPROVED FOR RELEASE: 06/06/2000 CIA-RDP86-00513R000103330003-8

RUSAKOV, Maksim Grigor'yevich; RECHMEDIN, Ivan Ostapovich; ROSLYY, Ivan Mikhaylovich; BALYASNAYA, A., red.; YUNOVSKIY, Ye., tekhn.red.

[Kiev; tour routes] Kiev; marshruty ekskursii. Kiev, Izd-vo Kievskogo univ., 1960. 153 p. (MIRA 13:12)
(Kiev--Guidebooks)

APPROVED FOR RELEASE: 06/06/2000 CIA-RDP86-00513R000103330003-8"

"APPROVED FOR RELEASE: 06/06/2000 CIA-RDP86-00513R000103330003-8

BALYASNAYA, A.I.

PROCESSES AND PROPERTIES INDEX

Actomyosin of heart muscle. B. S. Kasavina and A. I. Balyasnaya (1st Med. Inst., Moscow). *Byull. Eksp. Biol. Med.* 24, 146–9(1947).—Actomyosin was isolated from the heart muscle of the rabbit by the Bang and Szent-Györgyi method. Artificial actomyosin was made by combination of rabbit actin with myosin A from rabbit heart or dog heart, or from combination of actin of dog heart and myosin A or rabbit muscle, or from combination of dog-heart actin with myosin A of dog muscle. The prepns. were formed into filaments which sharply contracted in NaCl soln. under the influence of adenosinetriphosphate. The graphs show that all of the above combinations were active, with the "crossed" combinations being somewhat more active than the 1st (normal) type; the rabbit muscle actin-myosin A of dog-heart combination is most active. A diagram is given showing a sharp drop of viscosity of the prepns. of actomyosin under the influence of adenosinetriphosphate. G. M. Kosolapoff

ASM-SLA METALLURGICAL LITERATURE CLASSIFICATION

APPROVED FOR RELEASE: 06/06/2000 CIA-RDP86-00513R000103330003-8"

"APPROVED FOR RELEASE: 06/06/2000 CIA-RDP86-00513R000103330003-8

BALYASNAYA, A. I.

USSR/Medicine - Biochemistry Jan/Feb 49
Medicine - Aspartic Acid, Effect

"The Process of Decomposition of l-Aspartic Acid Under the Influence of Bacterial Aspartic Acid Decarboxylase," S. R. Merdashev, L. A. Semian, P. N. Etingof, A. I. Balyasnaya, Chair of Biochem, First Moscow Med Inst, 17 pp

"Biokhimiya" Vol XIV, No 1

Studies mechanism of decarboxylization of l-aspartic acid under influence of microbacteria isolated in the laboratory. Tried to identify product of the reaction with B-alanine. Determination of B-alanine by chemicals (through acrylic acid) and by microbiological methods (Saccher. cerevisiae) was unsuccessful. Determination of amine nitrogen by Van Slyke's method showed that decarboxy lization product contains amino group and that decarboxylization of aspartic acid is not accompanied by deaminization. Formation of -alanine was proved by chromatographic method. Submitted 22 Jun 48

PA 45/49T61

APPROVED FOR RELEASE: 06/06/2000 CIA-RDP86-00513R000103330003-8"

"APPROVED FOR RELEASE: 06/06/2000 CIA-RDP86-00513R000103330003-8

BALYASNAYA, A.I.

Mar/Apr 49

USSR/Medicine - Bacteria
Medicine - Enzymes

"Oxidases of Amino Acids in Certain Decarboxylizing Bacteria," S.R. Mardashev, R.N. Etingof, A.I. Balyasnaya, Chair of Biochem, First Moscow Med Inst, 6 pp

"Biokhimiya" Vol XIV, No 2

Established that B. cadaveris, E. Coli, and Pseudomycobacterium n. sp. possess enzymes which oxidize glutamic and aspartic acids, alpha-alanine, serine, asparagine, and cystine. Pseudo-Mycobacterium also has an oxidase of alpha-

PA 41/49T42

APPROVED FOR RELEASE: 06/06/2000 CIA-RDP86-00513R000103330003-8"

"APPROVED FOR RELEASE: 06/06/2000 CIA-RDP86-00513R000103330003-8

BALYASNAYA, A. I.

Chemical Abst.
Vol. 48 No. 8
Apr. 25, 1954
Biological Chemistry

(3)

Conversion of inosinic acid by ascitic cancer cells. R. N. Etingof and A. I. Balyasnaya (Ist. Med. Inst., Moscow). *Biokhimiya* 18, 638-43(1953).—The incubation of ascitic cancer cells with inosinic acid is accompanied by a diminution of ribose, a redistribution in the org. P compds. and an increase in the intensity of coloration by *p*-hydroxybiphenyl. It is assumed that as a result of incubation with ascitic cancer cells the ribose of inosinic acid breaks up into lactic acid. Inosinic and adenylic acids exert a slowing influence on the glycolytic properties of ascitic cancer cells. D. S. L.

APPROVED FOR RELEASE: 06/06/2000 CIA-RDP86-00513R000103330003-8

"APPROVED FOR RELEASE: 06/06/2000 CIA-RDP86-00513R000103330003-8

CHEREDNICHENKO, Vladimir Ivanovich; BALYASNAYA, A.Ye., red.

[Physics of the earth's upper atmosphere] Fizika verkhnei atmosfery Zemli. Kiev, Izd-vo Kievskogo univ., 1965. 201 p. (MIRA 18:8)

APPROVED FOR RELEASE: 06/06/2000 CIA-RDP86-00513R000103330003-8"

"APPROVED FOR RELEASE: 06/06/2000 CIA-RDP86-00513R000103330003-8

KHARIN, Sergey Yeleazarovich; BALYASNAYA, A.Ye., red.; YUNOVSKIY, Ye.B., tekhn.red.

[Physical chemistry] Fizicheskaia khimiia. Kiev, Izd-vo Kievskogo univ., 1961. 554 p. (MIRA 14:7)
(Chemistry, Physical and theoretical)

APPROVED FOR RELEASE: 06/06/2000 CIA-RDP86-00513R000103330003-8"

"APPROVED FOR RELEASE: 06/06/2000 CIA-RDP86-00513R000103330003-8

ANDRIYEVSKAYA, Mariya Grigor'yevna; BALYASNAYA, A.Ye., red.;
KHOKHANOVSKAYA, T.I., tekhn. red.

[Analytic geometry in Lobachevskii space] Analiticheskaia geometriia v prostranstve Lobachevskogo. Kiev, Izd-vo Kievskogo univ. 1963. 111 p. (MIRA 16:8)
(Geometry, Analytic)

APPROVED FOR RELEASE: 06/06/2000 CIA-RDP86-00513R000103330003-8

"APPROVED FOR RELEASE: 06/06/2000 CIA-RDP86-00513R000103330003-8

GERSHUNSKIY, Boris Semenovich; GORELIK, A.L., kand. tekhn. nauk, retsenzent; SMIRNOV, V.V., prepodavatel , retsenzent; BALYASNAYA, A.Ye., red.; MIRONETS, Ye.M., red.

[Principles of electronics and semiconductor technology] Osnovy elektronnoi i poluprovodnikovoi tekhniki. Kiev, Izd-vo Kievskogo univ., 1964. 322p. (MIRA 17:10)

1. Zaveduyushchiy kafedroy "Elektronnyye i ionnyye pribory" Khar'kovskogo instituta gornogo mashinostroyeniya, avtomatiki i vychislitel'noy tekhniki (for Gorelik). 2. L'vovskiy tekhnikum radioelektroniki (for Smirnov).

APPROVED FOR RELEASE: 06/06/2000 CIA-RDP86-00513R000103330003-8

"APPROVED FOR RELEASE: 06/06/2000 CIA-RDP86-00513R000103330003-8

SHVETS, Ivan Trofimovich, prof.; TOLUBINSKIY, Vsevolod Ivanovich, prof.; KIRAKOVSKIY, Nikolay Feliksovich, dots.; NEDUZHIY, Ivan Afanas'yevich, dots.; SHELUD'KO, Ivan Mikhavlovich, dots.; VOZNESENSKIY, A.A., prof., retsenzent; LABUTIN, A.A., spets. red.; BALYASNAYA, A.Ye., red.

[General heat engineering] Obshchaia teplotekhnika. [By] I.T.Shvets i dr. Kiev, Izd-vo Kievskogo univ., 1963. 562 p. (MIRA 17:10)

APPROVED FOR RELEASE: 06/06/2000 CIA-RDP86-00513R000103330003-8"

"APPROVED FOR RELEASE: 06/06/2000 CIA-RDP86-00513R000103330003-8

KLIGMAN, Isaak Naumovich; LABETSKIY, Leonard Ivanovich; ZBRITSKIY, Vasiliy Lyudvigovich; BALYASNAYA, A.Ye., red.

[Collection of problems on design and drawing in mechanical engineering] Sbornik raschetno-graficheskikh zadanii po tekhnicheskoi mekhanike. Kiev, Izd-vo Kievskogo univ., 1964. 246 p. (MIRA 18:3)

APPROVED FOR RELEASE: 06/06/2000 CIA-RDP86-00513R000103330003-8"

"APPROVED FOR RELEASE: 06/06/2000 CIA-RDP86-00513R000103330003-8

VLADIMIRSKIY, Boris Leonidovich; LEVIN, Georgiy Petrovich; LOYEV, Yefim Grigor'yevich; MARUSHCHAK, Vasiliy Yefimovich; ULASIK, Vasiliy Lavrent'yevich; MIRONETS, Ye.M., red.; BALYASNAYA, A.Ye., red.

[Practical laboratory work in general electrical engineering] Laboratornyi praktikum po obshchei elektrotekhnike. Kiev, Izd-vo Kievskogo univ., 1964. 184 p. (MIRA 18:2)

APPROVED FOR RELEASE: 06/06/2000 CIA-RDP86-00513R000103330003-8"

"APPROVED FOR RELEASE: 06/06/2000 CIA-RDP86-00513R000103330003-8

ROGACHEV, V.I., kandidat tekhnicheskikh nauk; BALYASNAYA, I.M., nauchnyy sotrudnik.

Variation of the colloidal and chemical properties of grape juice under different methods of clarification. Trudy VNIIKP no.3: 120-128 '54. (MLRA 9:8)

(Fruit juices--Analysis)

APPROVED FOR RELEASE: 06/06/2000 CIA-RDP86-00513R000103330003-8"

"APPROVED FOR RELEASE: 06/06/2000 CIA-RDP86-00513R000103330003-8

BALYASNAYA, L.K.

Work education of students and the objectives of the Communist Youth League. Politekh. obuch. no.8:3-7 Ag '59. (MIRA 12:10)

1.Sekretar' TSentral'nogo komiteta Vsesoyuznogo Leninskogo Kommunisticheskogo soyuza molodezhi.
(Communist Youth League) (Education of children)

APPROVED FOR RELEASE: 06/06/2000 CIA-RDP86-00513R000103330003-8"

"APPROVED FOR RELEASE: 06/06/2000 CIA-RDP86-00513R000103330003-8

GOLUB, Andrey Matveyevich [Holub, A.M.], KUCHERENKO, N.I., kand.khim. nauk, otv.red.; LEONT'YEV, P.D., red.; BALYASNAYA, O.Ye. [Baliasna, O.IE.], red.; CHALA, O.O., tekhn.red.

[Methods of classification and terminology in inorganic chemistry] Systematyka i terminologiia v neorganichnii khimii. Kyiv, Vyd-vo Kyivs'koho univ., 1959. 147 p. (MIRA 13:1)
(Chemistry, Inorganic--Nomenclature)

APPROVED FOR RELEASE: 06/06/2000 CIA-RDP86-00513R000103330003-8"