APPROVED FOR RELEASE: 06/23/11: CIA-RDP86-00513R000204600036-6

BELYAYEV, G.M., Mbr., Inst. Zoology, Moscow Order Lenin State Univ. im. M.V. Lomonosov. Zoology.

"A Comparison Between the Osmoregulatory Ability in Volga River and Caspian Amphipods," Dok. AN, No. 7, 1944.

APPROVED FOR RELEASE: 06/23/11: CIA-RDP86-00513R000204600036-6

APPROVED FOR RELEASE: 06/23/11: CIA-RDP86-00513R000204600036-6

NASIMOVICH, A.A.; BELYAYEV, G.M.

Reviews. Zool.zhur. 44 no.11:1741-1744 '65. (MIRA 18:12)

APPROVED FOR RELEASE: 06/23/11: CIA-RDP86-00513R000204600036-6

APPROVED FOR RELEASE: 06/23/11: CIA-RDP86-00513R000204600036-6

BELYAYEV, G.K.

Tectonic development of the central depression of the Caucasus. Uch. zap. SOGPI 26 no.2:57-61 '64.

(MIRA 19:1)

APPROVED FOR RELEASE: 06/23/11: CIA-RDP86-00513R000204600036-6

APPROVED FOR RELEASE: 06/23/11: CIA-RDP86-00513R000204600036-6

BELYAYEV, G.K., inzh.-podpolkovnik

Change the system of accounting in the maintenance unit.
Vest.Vozd.Fl. no.6:83-84 Je '60. (MIRA 13:7)
(Airplanes--Maintenance and repair)

APPROVED FOR RELEASE: 06/23/11: CIA-RDP86-00513R000204600036-6

APPROVED FOR RELEASE: 06/23/11: CIA-RDP86-00513R000204600036-6

L 36367-66

ACC NR: AR6012431

2

consisting of glass with additions of Fe or Cu powder 19 greatly expand. The solubility of Fe oxides decreases with increased glass acidity. In pure B_2O_3, Fe oxide is almost insoluble, which shows the incompatibility of Fe_2O_3 with molten borate glass. 15 It is shown that the method of electromotive forces can be applied to determine the relative acidity of borate glasses. Bibliography of 10 titles. Authors' summary. [Translation of abstract] [NT]

SUB CODE: 11/

Card 2/2

APPROVED FOR RELEASE: 06/23/11: CIA-RDP86-00513R000204600036-6

APPROVED FOR RELEASE: 06/23/11: CIA-RDP86-00513R000204600036-6

L 36367-66 EWT(m)/EWP(e)/EWP(t)/ETI IJP(c) WH/JD/WB

ACC NR: AR6012431 SOURCE CODE: UR/0081/65/000/020/M010/M010

41

AUTHORS: Belyayev, G. I.; Smakota, N. F. 39

B

TITLE: Interaction of glasses of the Na_2O - B_2O_3 - SiO_2 system with iron, steel, and other metal oxides 27

SOURCE: Ref. zh. Khimiya, Abs. 20M87

REF SOURCE: Sb. Stekloobrazn. sostoyaniye. T. 3. Vyp. 4. Minsk, 1964, 93-97

TOPIC TAGS: iron, steel, borate glass, solubility, electromotive force, metal oxidation

ABSTRACT: Metal dissolution, enrichment of the melt by its oxides, and gas evolution occur in metal-glass compositions at high temperatures, which can lead to swelling and formation of a foamy structure close to the interphase boundary. It is established that the nature of the silicate melt has a significant effect on the rate of metal dissolution. With an increase in glass alkalinity, the metal corrosion losses increase. The swelling intensity of a borosilicate alloy grows with increased glass alkalinity. At the same time the boiling of the melt depends on the metal: an insignificant increase in the volume of the alloy is observed at the interaction with Ni and Cu. Compositions

18

27 27

Card 1/2

APPROVED FOR RELEASE: 06/23/11: CIA-RDP86-00513R000204600036-6

APPROVED FOR RELEASE: 06/23/11: CIA-RDP86-00513R000204600036-6

BELYAYEV, G.I., doktor tekhn. nauk [deceased]; SHCHEGLOVA, M.I., kand. tekhn. nauk; GERZMAVA, D.V., inzh.; DROBICH, O.P., inzh.

Interaction of steel with silicate melts. Stek. i ker. 22 no.8: 27-29 Ag '65. (MIRA 18:9)

1. Dnepropetrovskiy khimiko-tekhnologicheskiy institut (for Belyayev, Shcheglova). 2. Vsesoyuznyy nauchno-issledovatel'skiy i konstruktorsko-tekhnologicheskiy institut trubnoy promyshlennosti (for Gerzmava, Drobich).

APPROVED FOR RELEASE: 06/23/11: CIA-RDP86-00513R000204600036-6

APPROVED FOR RELEASE: 06/23/11: CIA-RDP86-00513R000204600036-6

BELYAYEV, G.I., doktor tekhn. nauk; BELYY, Ya.I., inzh.

Effect of fluorine on the properties of low-melting enamels.
Stek. i ker. 22 no.4:34-36 Ap '65. (MIRA 18:5)

1. Dnepropetrovskiy khimiko-tekhnologicheskiy institut.

APPROVED FOR RELEASE: 06/23/11: CIA-RDP86-00513R000204600036-6

APPROVED FOR RELEASE: 06/23/11: CIA-RDP86-00513R000204600036-6

L 52721-65 EPA(s)-2/EPA(w)-2/EWT(m)/EWP(i)/EWP(b)/EWP(e) Pt-7/Pab-10 WW

ACCESSION NR: AP5013319 UR/0286/65/000/009/0111/0111
666.29

AUTHOR: Belyayev, G. ...; Bardinov, Yu. D.; Belyy, Ya. I.; Ponomarchuk, S. M.

TITLE: Silicate low-boron enamel. Class 48, No. 170814

SOURCE: Byulleten' izobreteniy i tovarnykh znakov, no. 9, 1965, 111

TOPIC TAGS: enamel, boron, borax

ABSTRACT: This Author's Certificate introduces a silicate low-boron enamel which is made up of quartz sand, feldspar, soda ash, sodium nitrate, cryolite, titanium dioxide, cobaltic oxide, nickel oxide and a substance which contains boron anhydride. Since borax is not easy to obtain, datolite concentrate is used as the substance which contains boron anhydride.

ASSOCIATION: none

SUBMITTED: 11May63 ENCL: 00 SUB CODE: MM

NO REF SOV: 000 OTHER: 000

Card 1/1

APPROVED FOR RELEASE: 06/23/11: CIA-RDP86-00513R000204600036-6

APPROVED FOR RELEASE: 06/23/11: CIA-RDP86-00513R000204600036-6

BELYAYEV, C.I., doktor tekhn. nauk [deceased]; YES'KOV, A.S., inzh.; SMAKOTA, N.P., kand. tekhn. nauk; PONOMARCHUK, A.M., inzh.

Corrosion of steel in silicate and borosilicate melts. Mashinostroenie no.5:87-89 S-O '65. (MIRA 18:9)

APPROVED FOR RELEASE: 06/23/11: CIA-RDP86-00513R000204600036-6

APPROVED FOR RELEASE: 06/23/11: CIA-RDP86-00513R000204600036-6

BELYAYEV, G.I., doktor tekhn. nauk [deceased]; YES'KOV, A.S., inzh.; BARINOV, Yu.B., kand. tekhn. nauk

Capacity of titanium, titanous-vanadium and manganese steels for enameling. Mashinostroenie no.3:83-85 My-Je '65. (MIRA 18:6)

APPROVED FOR RELEASE: 06/23/11: CIA-RDP86-00513R000204600036-6

APPROVED FOR RELEASE: 06/23/11: CIA-RDP86-00513R000204600036-6

L 27821-65

ACCESSION NR: AP5007916

2

vealed a similar pattern. Tests with Mg_2SiO_4 specimens showed that temperatures above 1100 C had no effect on strength characteristics. Orig. art. has: 4 figures and 3 tables.

ASSOCIATION: Dneprojetrovskiy khimiko-tekhnologicheskiy institut (Dnepropetrovsk chemical and technological institute)); Chasov-Yarskiy kombinat ogneuporynykh izdeliy (Chasov-Yar refractory combine)

SUBMITTED: 00 ENCL: 00 SUB CODE: MT

NO REF SOV: 004 OTHER: 000

Card 2/2

APPROVED FOR RELEASE: 06/23/11: CIA-RDP86-00513R000204600036-6

APPROVED FOR RELEASE: 06/23/11: CIA-RDP86-00513R000204600036-6

L 27891-65 EWT(m)/EWP(e)/EWT(m)/T WW

ACCESSION NR: AP5002916 S/0131/65/000/001/0043/0045

AUTHOR: Belyayev, G. I.; Shebeglova, M. D.; Khanevskaya, L. S.

TITLE: High-temperature strength of forsterite refractories

SOURCE: Ogneupory, no. 1, 1965, 43-45

TOPIC TAGS: forsterite, dunite, magnesite, compressive strength, presintering, grain distribution, high temperature strength

ABSTRACT: The compressive strength of forsterite composed of 75% dunite and 25% magnesite was tested within the 100 - 1500 C range. The best strength characteristics were observed in specimens with a presintered (1000C) dunite component having the following grain distribution: 29% 3-1.5 mm; 13% 1.5-1 mm; 17% 1 to 0.5 mm and 41% under 0.5 mm. These specimens displayed lowered porosity (reduced by 3%) and an increase in the compressive strength from 153 to 206 kg/cm^2. A 20 to 40% decline in the compressive strength of all specimens was observed at 100 - 200 C, which eventually increased under the influence of higher temperatures. Maximum strength was observed at 1000 C for all specimens but it decreased above that temperature. Industrial specimens from the Panteleymonova Plant re-

Card 1/2

APPROVED FOR RELEASE: 06/23/11: CIA-RDP86-00513R000204600036-6

APPROVED FOR RELEASE: 06/23/11: CIA-RDP86-00513R000204600036-6

BELYAYEV, G.I., doktor tekhn. nauk; BELYY, Ya.I., inzh.

Fusible enamel coatings with titanium content. Mashinostroenie no.3:33-35 My-Je '64. (MIRA 17:11)

APPROVED FOR RELEASE: 06/23/11: CIA-RDP86-00513R000204600036-6

APPROVED FOR RELEASE: 06/23/11: CIA-RDP86-00513R000204600036-6

ACCESSION NR: AP4027223

ENCLOSURE: 03

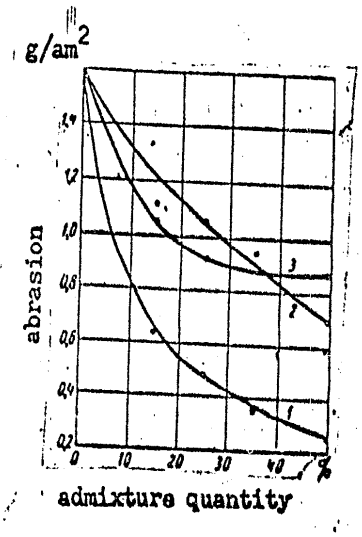

Fig. 3. The effect of different admixtures on the abrasion resistance of enamel No. 105.

1 - chromium oxide; 2 - synthetic corundum
3 - quartz sand

Card 5/5

APPROVED FOR RELEASE: 06/23/11: CIA-RDP86-00513R000204600036-6

APPROVED FOR RELEASE: 06/23/11: CIA-RDP86-00513R000204600036-6

ACCESSION NR: AP4027223

ENCLOSURE: 02

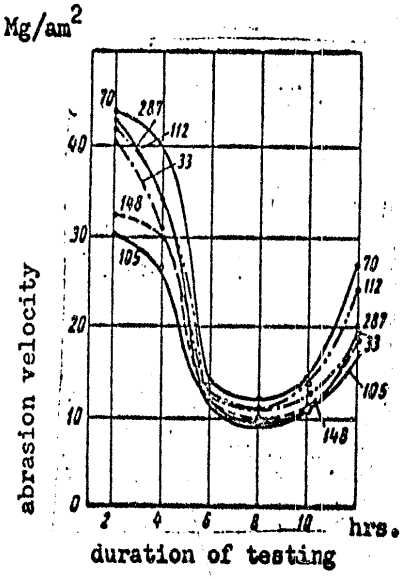

Fig. 2. The velocity of enamel coating destruction.

Card 4/5

APPROVED FOR RELEASE: 06/23/11: CIA-RDP86-00513R000204600036-6

APPROVED FOR RELEASE: 06/23/11: CIA-RDP86-00513R000204600036-6

ACCESSION NR: AP4027223

ENCLOSURE: 01

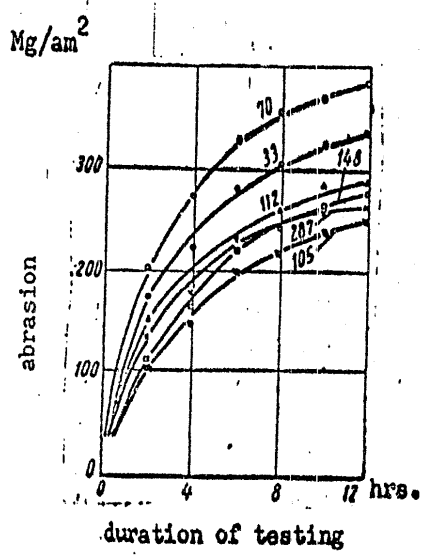

Fig. 1. Abrasion of different enamels under the action of acid abrasive (the serial numbers of enamels tested are marked by figures).

Card 3/5

APPROVED FOR RELEASE: 06/23/11: CIA-RDP86-00513R000204600036-6

APPROVED FOR RELEASE: 06/23/11: CIA-RDP86-00513R000204600036-6

ACCESSION NR: AP4027223

destruction produced by acid abrasion, but the quantity of the material removed was larger in the second case. The addition of chromium oxide, synthetic corundum, and quartz sand into the dross in the quantities of 15, 25, 35, and 50% increased the abrasion resistance of enamels. According to the intensity of their effect on enamel hardness these substances are listed in an ascending order: chromium oxide, synthetic corundum, sand. The use of such admixtures requires an increase in the temperature of the enamel treatment to ascertain the optimal degree of sintering and fusion. The proper temperature and the duration of heating should be determined experimentally. Orig. art. has: 3 tables and 4 figures.

ASSOCIATION: none

SUBMITTED: 00 DATE ACQ: 17Apr64 ENCL: 03

SUB CODE: CH, ML NO REF SOV: 004 OTHER: 000

Card 2/5

APPROVED FOR RELEASE: 06/23/11: CIA-RDP86-00513R000204600036-6

APPROVED FOR RELEASE: 06/23/11: CIA-RDP86-00513R000204600036-6

ACCESSION NR: AP4027223 S/0184/64/000/002/0030/0032

AUTHORS: Belyayev, G. I. (Doctor of technical sciences, Professor); Ponomarchuk, S. M. (Engineer)

TITLE: Abrasion resistance of enamel coatings

SOURCE: Khimicheskoye mashinostroyeniye, no. 2, 1964, 30-32

TOPIC TAGS: enamel, enamel coating, enamel abrasion, neutral abrasive, acid abrasive, enamel strength, annealing temperature effect, hard admixture effect, heat-resistant admixture, chromoum oxide, synthetic corundum, quartz sand

ABSTRACT: This study of abrasion resistance made it possible to determine the requirements for an increase in the durability of various enamel coatings. The abrasion resistance was evaluated from the loss of weight in an enamel sample subjected to a 2-hour abrasion test series. The experimental results are presented graphically (see Figs. 1, 2, and 3 on the Enclosures). Quartz sand (dry, with water, or with 0.5% H_2SO_4) served as the abrasive agent. Material destruction observed during tests with moist, neutral abrasive was of the same nature as the

Card 1/5

APPROVED FOR RELEASE: 06/23/11: CIA-RDP86-00513R000204600036-6

APPROVED FOR RELEASE: 06/23/11: CIA-RDP86-00513R000204600036-6

ACCESSION NR: AT4030807

of the glass. The intensity of the expansion of the borosilicate alloy rises with the increase of the glass alkalinity. Metals have a great effect on the expansion. An insignificant expansion of the alloy was observed in the reaction with nickel, copper, and molybdenum; compositions consisting of glass with powdered iron, cobalt, or chromium additives, expand strongly. It was shown that the solubility of the iron oxides decreases with an increase in the acidity of the glass. In pure boron anhydride, ferric oxide practically does not dissolve. Orig. art. has: 11 figures and 1 table.

ASSOCIATION: Dnepropetrovskiy khimiko-tekhnologicheskiy institut (Dnepropetrovsk Chemical Engineering Institute)

SUBMITTED: 23Nov63 DATE ACQ: 16Apr64 ENCL: 00

SUB CODE: ML NO REF SOV: 004 OTHER: 004

Card 2/2

APPROVED FOR RELEASE: 06/23/11: CIA-RDP86-00513R000204600036-6

APPROVED FOR RELEASE: 06/23/11: CIA-RDP86-00513R000204600036-6

BR

ACCESSION NR: AT4030807 S/0000/63/000/000/0262/0272

AUTHOR: Belyayev, G. I.; Smakota, N. F.; Verbitskiy, P. G.; Barinov, Yu. D.

TITLE: On the interaction of borosilicate melts with certain metals and oxides

SOURCE: AN UkrSSR. Institut metallokeramiki i spatsial'ny*kh splavov. Poverkhnostny*ye yavleniya v rasplavakh i protsessakh poroshkovoy metallurgii (surface phenomena in liquid metals and processes in powder metallurgy), Kiev, Izd-vo AN UkrSSR, 1963, 262-272

TOPIC TAGS: borosilicate, oxide, vitreous covering, metal ceramic material, silicate, steel, sodium borosilicate glass

ABSTRACT: In this paper the authors studied the process of the reaction of steel with sodium borosilicate glasses of different acidity. It was shown that in compositions of metal glass at high temperatures, a chemical reaction of phases occurs which is accompanied by the solution of the metal, the enrichment of the alloy by its oxides, and a separation of gases which leads to the expansion and formation of a foamy structure near the interphase boundary. It was established that the nature of the silicate melt has a considerable effect on the speed of dissolution of the steel samples; the solubility of steel increases with an increase in the alkalinity

Card 1/2

APPROVED FOR RELEASE: 06/23/11: CIA-RDP86-00513R000204600036-6

APPROVED FOR RELEASE: 06/23/11: CIA-RDP86-00513R000204600036-6

BELYAYEV, G.I., doktor tekhn.nauk; BARINOV, Yu.D., inzh.; TOVARENKO-KLIMENKO, N.N., inzh.

Heat resistance of protective enamel coatings. Mashinostroenie no. 4:79-81 Jl-Ag '63. (MIRA 17:2)

APPROVED FOR RELEASE: 06/23/11: CIA-RDP86-00513R000204600036-6

APPROVED FOR RELEASE: 06/23/11: CIA-RDP86-00513R000204600036-6

BELYAYEV, G. I.; SMAKOTA, N. F.

"On connection of EMF, acidity and some properties of enamel glasses containing MeO type oxides of metals."

report submitted for 4th All-Union Conf on Structure of Glass, Leningrad, 16-21 Mar 64.

APPROVED FOR RELEASE: 06/23/11: CIA-RDP86-00513R000204600036-6

APPROVED FOR RELEASE: 06/23/11: CIA-RDP86-00513R000204600036-6

BELYAYEV, G.I., doktor tekhn.nauk, prof.; BLEKH, S.I., inzh.

Enamels made with a rutile concentrate. Stek. i ker. 20 no.4: 26-27 Ap '63. (MIRA 16:3)

1. Dnepropetrovskiy khimiko-tekhnologicheskiy institut (for Belyayev). 2. Novomoskovskiy metallurgicheskiy zavod (for Blekh).

(Titanium) (Enamel and enameling)

APPROVED FOR RELEASE: 06/23/11: CIA-RDP86-00513R000204600036-6

APPROVED FOR RELEASE: 06/23/11: CIA-RDP86-00513R000204600036-6

0.4mole% SrO. In the last series of experiments the effect of Al_2O_3 was tested. Results:(8) The most intense increase in opacity and water resistance due to Al_2O_3 occured in the zirconium frits. There are 5 figures and 2 tables.

ASSOCIATION: Dnepropetrovskiy khimiko-tekhnologicheskiy institut im. F.E. Dzerzhinskogo (Dnepropetrovsk Physicotechnical Institute imeni F.E. Dzerzhinskiy)

APPROVED FOR RELEASE: 06/23/11: CIA-RDP86-00513R000204600036-6

APPROVED FOR RELEASE: 06/23/11: CIA-RDP86-00513R000204600036-6

up to 15 mole%. In the second series of glasses the Na_2O content was varied from 10 to 40 mole%, and the Ba_2O_3 content from 40 to 10 mole%; the SiO_2 content was kept constant at 35 mole%, and the ZrO_2 content at 15 mole%. Results: (3) the viscosity of the melt decreased with increasing basicity. (4) Raising the B_2O_3 content and lowering the Na_2O content reduced the solubility of ZrO_2 and increased the opacity. (5) The water resistance increased between 10 and 30 mole% Na_2O; at higher Na_2O content it decreased rapidly. In the third series of experiments the following substances were added to glass of composition $Na_2O \cdot B_2O_3 \cdot 1.4SiO_2 \cdot 0.58ZrO_2$: 0.1 - 0.8 mole% BeO, MgO, CaO, SrO, BaO, ZnO or CdO. Results:(6) Each of the group II metal oxides increased the opacity. 0.1-0.2mole% BeO, MgO, ZnO, or CdO produced particularly intensive effects. The opacifying effect decreases in the following order: BeO, ZnO, MgO, CdO, CaO, SrO, BaO. (7) The water resistance of the frits was higher after adding the oxides than before, except after the addition of ZnO. The most significant increase in chemical stability was produced by 0.8mole% CaO or

APPROVED FOR RELEASE: 06/23/11: CIA-RDP86-00513R000204600036-6

APPROVED FOR RELEASE: 06/23/11: CIA-RDP86-00513R000204600036-6

S/072/63/000/003/003/004
B101/B186

AUTHORS: Belyayev, G. I., Doctor of Technical Sciences, Barinov, Yu.N., Engineer

TITLE: Effect of the composition of zirconium enamels on their whiteness and water resistance

PERIODICAL: Steklo i keramika, no. 3, 1963, 20-23

TEXT: The way in which the composition of glasses of the Na_2O - B_2O_3 - SiO_2 - ZrO_2 system affects the opacity, water resistance and viscosity was studied. The first series of glasses examined had the composition $Na_2O \cdot B_2O_3 \cdot (2-x)SiO_2 \cdot xZrO_2$ where x = 0 - 0.7, Na_2O = 25 mole%, B_2O_3 = 25 mole%. The glasses were melted at 1180 - 1200°C. Results: (1) the water resistance of the glass increased with increasing ZrO_2 content. (2) Glasses containing 15 or more mole% ZrO_2 were opaque. Frits containing less ZrO_2 were transparent and gave only slightly opaque enamels on steel. Conclusion: in glass of the given composition ZrO_2 is soluble

Card 1/3

APPROVED FOR RELEASE: 06/23/11: CIA-RDP86-00513R000204600036-6

APPROVED FOR RELEASE: 06/23/11: CIA-RDP86-00513R000204600036-6

BELYY, Ye.I.; BELYAYEV, G.I.

Interaction of borosilicate melts and steel. Trudy GPNTI no.16: 71-76 '62 (MIRA 17:8)

APPROVED FOR RELEASE: 06/23/11: CIA-RDP86-00513R000204600036-6

APPROVED FOR RELEASE: 06/23/11: CIA-RDP86-00513R000204600036-6

BELYAYEV, G.I.

Some properties of enamel glasses. Ukr.khim.zhur. 28 no.2:263-265 '62. (MIRA 15:3)

1. Dnepropetrovskiy khimiko-tekhnologicheskiy institut.
(Glass--Corrosion) (Metallic oxides)

APPROVED FOR RELEASE: 06/23/11: CIA-RDP86-00513R000204600036-6

APPROVED FOR RELEASE: 06/23/11: CIA-RDP86-00513R000204600036-6

BELYAYEV, G.I., doktor tekhn.nauk; BELYY, Ya.I.; SMAKOTA, N.F.

Effect of clay on some properties of enamel. Stek. i ker. 19 no.6:29-31 Je '62. (MIRA 15:7)
(Enamel and enameling) (Clay)

APPROVED FOR RELEASE: 06/23/11: CIA-RDP86-00513R000204600036-6

APPROVED FOR RELEASE: 06/23/11: CIA-RDP86-00513R000204600036-6

BELYAYEV, G.I.; BARINOV, Yu.D.

Effect of the composition of metal and frit on the swelling of enamels. Stek. i ker. 19 no.1:26-30 Ja '62. (MIRA 15:3)
(Enamel and enameling)

APPROVED FOR RELEASE: 06/23/11: CIA-RDP86-00513R000204600036-6

APPROVED FOR RELEASE: 06/23/11: CIA-RDP86-00513R000204600036-6

BELYAYEV, G.I., kand.tekhn.nauk; BARINOV, Yu.D., inzh.

Wear resistance of enamel coatings. Mashinostroenie no.1:67-70 Ja-F '62. (MIRA 15:2)

1. Dnepropetrovskiy khimiko-tekhnologicheskiy institut.
(Enamel and enameling)

APPROVED FOR RELEASE: 06/23/11: CIA-RDP86-00513R000204600036-6

APPROVED FOR RELEASE: 06/23/11: CIA-RDP86-00513R000204600036-6

Enamels and Enameling Processes SOV/5503

Vargin, V. V. Some Problems Regarding the Composition, Properties, and Technology of Enamels for Chemical Equipment 15

Podkletnov, Ye. N. Latest Technology of Enameling in an Electromagnetic Field With the Use of Automatic Machine Tools 22

Vargin, V. V., and L. L. Gutorova. Alkali-Resistant Enamels 33

Svetlov, V. A., N. S. Smirnov, and I. A. Kikovskiy. Increasing the Chemical Stability of Enamel Coatings 44

Belyayev, G. I. Effect of Magnesium Oxide and Chromomagnesite on the Properties of Enamels Containing Little or No Boron 53

Litvinova, Ye. I. Effect of Metals on the Quality of Enamel Coatings 63

Matyash, A. Ya. Production and Use of Enameled Equipment 72

Ostapchuk, Yu. G. Production of Enameled Chemical Equipment at the "Krasnyy Oktyabr'" Plant 77

APPROVED FOR RELEASE: 06/23/11: CIA-RDP86-00513R000204600036-6

APPROVED FOR RELEASE: 06/23/11: CIA-RDP86-00513R000204600036-6

17

SOV/5583

Enamels and Enameling Processes

Society imeni Mendeleyev, Scientific Technical Society of the Machine-Building Industry, and other sovnarkhozes, scientific research institutes, and planning organizations. [The name, place, and date of the conference are not given.] The following are discussed: old and new types of enamels, their composition, properties, uses, and methods of production; the production of enameled equipment (chemical apparatus, pipes, cisterns, etc.), and their use in the coal, chemical, food, and other industries; latest advances in the mechanization of enameling processes and techniques; the effect of underlying surfaces on the quality of enamel coatings; and methods of modifying the properties of enamel coatings, e.g., increasing their chemical stability. American and Chinese practices and production are also briefly discussed. No personalities are mentioned. There are 32 references: 22 Soviet, 7 English, and 3 German.

TABLE OF CONTENTS:

Tsmel', V. M. Development of the Enamel Industry in the Ukrainian SSR 3

Smirnov, N. S. Prospects for Developing and Methods of Improving the Enamel Industry in the Urals, Siberia, and the [Soviet] Far East 11

Card 2/4

APPROVED FOR RELEASE: 06/23/11: CIA-RDP86-00513R000204600036-6

APPROVED FOR RELEASE: 06/23/11: CIA-RDP86-00513R000204600036-6

BELYAYEV, G I

7

PHASE I BOOK EXPLOITATION SOV/5583

Podkletnov, Ye. N., Stalin Prize Winner, ed.

Emal' i protsessy emalirovaniya (Enamels and Enameling Processes) Moscow, Mashgiz, 1961. 113 p. 4,000 copies printed.

Sponsoring Agency: Gosudarstvennyy nauchno-tekhnicheskiy komitet Soveta Ministrov UkrSSR. Institut tekhnicheskoy informatsii.

Ed.: N. P. Onishchenko; Tech. Ed.: M. S. Gornostaypol'skaya; Chief Ed.: Mashgiz (Southern Dept.): V.K. Serdyuk, Engineer.

PURPOSE: This book is intended for engineering and technical personnel concerned with the research, production, and uses of enamel.

COVERAGE: This collection of articles on enamels and enameling processes is based on material presented at the first Ukraine-wide conference on the production of enamel and enameled equipment, organized by the State Scientific Technical Committee of the Ukrainian SSR, the Kiyev Sovnarkhoz, Chemical

Card 1/4

APPROVED FOR RELEASE: 06/23/11: CIA-RDP86-00513R000204600036-6

APPROVED FOR RELEASE: 06/23/11: CIA-RDP86-00513R000204600036-6

BELYAYEV, G. I.

Doc Tech Sci - (diss) "Study of the properties of ground enamels as a function of their composition." Khar'kov, 1961. 24 pp; with diagrams;(Ministry of Higher and Secondary Specialist Education Ukrainian SSR, Khar'kov Polytechnic Inst imeni V. I. Lenin); 250 copies; price not given; list of author's works on pp 23-24 (19 entries); (KL, 7-61sup, 229)

APPROVED FOR RELEASE: 06/23/11: CIA-RDP86-00513R000204600036-6

APPROVED FOR RELEASE: 06/23/11: CIA-RDP86-00513R000204600036-6

The Influence Exerted by Metallic Oxides of the Second Group Upon the Properties of Prime Enamel

S/072/60/000/04/011/029
B015/B014

calcium enamels proved to be best suited. There are 5 figures, 1 table, and 1 Soviet reference.

Card 2/2

APPROVED FOR RELEASE: 06/23/11: CIA-RDP86-00513R000204600036-6

APPROVED FOR RELEASE: 06/23/11: CIA-RDP86-00513R000204600036-6

AUTHOR: Belyayev, G. I.

S/072/60/000/04/011/029
B015/B014

TITLE: The Influence Exerted by Metallic Oxides of the Second Group Upon the Properties of Prime Enamel

PERIODICAL: Steklo i keramika, 1960, Nr 4, pp 33-35 (USSR)

TEXT: The influence exerted by the oxides of alkali-earths upon the properties of glazings was studied by A. A. Appen, V. P. Barzakovskiy, I. I. Kitaygorodskiy, A. I. Avgustinik, and Yu. G. Shteynberg. The part played by these oxides in prime enamels for steel products has not yet been fully explained. In the article under review the author investigated the action of metallic oxides of the second group on the meltability, viscosity, surface tension, wetting angle, and other properties of enamel melt similar to prime enamel Nr 27. The influence exercised by metallic oxides of the second group upon the meltability of enamel at a temperature of 850° and upon viscosity at 580° is illustrated in figures 1 and 2. The values of surface tension and wetting angle of enamel as dependent on the radius of metallic cations of the second group are contained in figures 3 and 4. Figure 5 depicts the intense dissolution of steel in a silicate melt which contains cadmium oxide. Finally, attempts were made to coat steel specimens with enamel. The results obtained are listed in a table. Strontium, magnesium, and

Card 1/2

APPROVED FOR RELEASE: 06/23/11: CIA-RDP86-00513R000204600036-6

APPROVED FOR RELEASE: 06/23/11: CIA-RDP86-00513R000204600036-6

BELYAYEV, G.I.

Oxidation of steel during the roasting of boric and nonboric ground enameled coatings. Zhur.prikl.khim. 33 no.1:94-101 Ja '60. (MIRA 13:5)

1. Dnepropetrovskiy khimiko-tekhnologicheskiy institut.
(Steel--Corrosion) (Enamel and enameling)

APPROVED FOR RELEASE: 06/23/11: CIA-RDP86-00513R000204600036-6

APPROVED FOR RELEASE: 06/23/11: CIA-RDP86-00513R000204600036-6

BELYAYEV, G.I.; GENDRIKHOVSKAYA, G.Ch.; BABENKO, L.F.; MASHCHENKO, L.V.

Effect of bentonites and other clays on certain properties of enamels. Bent.gliny Ukr. no.3:142-148 '59.
(MIRA 12:12)

1. Dnepropetrovskiy khimiko-tekhnologicheskiy institut.
(Enamel and enameling) (Clay)

APPROVED FOR RELEASE: 06/23/11: CIA-RDP86-00513R000204600036-6

APPROVED FOR RELEASE: 06/23/11: CIA-RDP86-00513R000204600036-6

Influence of Fluorine on Some Properties of Priming Enamel

SOV/72-59-3-10/19

steel oxidation decrease during the prime burning. The dependence of the acid content of the melt upon the fluorine additions is shown in figure 5. A table shows the quality of the enamel coating depending on the fluorine additions. In conclusion it is recommended to add to the layer fluorine in the form of NaF, Na_2SiF_6 or CaF_2 respectively, for the purpose of improving the quality of boron-free prime coatings. [illegible] 5 figures, 1 table, and 9 Soviet references.

Card 3/3

APPROVED FOR RELEASE: 06/23/11: CIA-RDP86-00513R000204600036-6

APPROVED FOR RELEASE: 06/23/11: CIA-RDP86-00513R000204600036-6

USSR/[illegible]
AUTHOR: [illegible]

SOV/72-59-[illegible]

TITLE: Influence of Fluorine on Some Properties of the Priming [illegible] ([illegible] Flora na nekotoriye svoystva gruntovoy emali)

PERIODICAL: Steklo i keramika, 1959, [illegible] (USSR)

ABSTRACT: The damping properties of fluorides as well as the influence of fluorine as mineralizer were investigated by the following scientists: I. I. Kitaygorodskiy, V. V. Vargin, N. A. Toropov, V. Ya. Lokshin, V. A. Veyl'. In the present paper the influence of fluorine upon the oxidability of steel (G. I. Belyayev, Ref 1) and the burning through of the priming coat as well as upon the fusibility, viscosity and surface tension of the enamel melt was investigated. (K. P. Azarov, Ref 2). The acid properties of enamel melts are evaluated, according to the paper by G. Larson, Dzh. Chipman, basing on the acid content coefficient, which is calculated with a formula described. From figures 1 and 2 may be seen that the fusibility of boron-free enamels improves with an addition of up to 6% of fluorine to the enamel melt, whereas viscosity drops. Figure 3 and 4 show that with an increase in the additional fluorine quantity the surface tension of enamel and the intensity of

Card 1/2

APPROVED FOR RELEASE: 06/23/11: CIA-RDP86-00513R000204600036-6

APPROVED FOR RELEASE: 06/23/11: CIA-RDP86-00513R000204600036-6

BELYAYEV, G.I.; SMAKOTA, N.F.

Effect of ferric oxide on the properties of enamel primers with and without boron. Zhur.prikl.khim. 31 no.12:1792-1799 D '58. (MIRA 12:2)

1. Dnepropetrovskiy khimiko-tekhnologicheskiy institut.
(Iron oxides) (Enamel and enameling)

APPROVED FOR RELEASE: 06/23/11: CIA-RDP86-00513R000204600036-6

APPROVED FOR RELEASE: 06/23/11: CIA-RDP86-00513R000204600036-6

BELYAYEV, G.I.; SMAKOTA, N.F.

Effect of the crystallization of frit on the properties of enamel primer. Zhur.prikl.khim. 31 no.11:1744-1746 N '58. (MIRA 12:2)

1. Dnepropetrovskiy khimiko-tekhnologicheskiy institut.
(Frits) (Enamel and enameling)

APPROVED FOR RELEASE: 06/23/11: CIA-RDP86-00513R000204600036-6

APPROVED FOR RELEASE: 06/23/11: CIA-RDP86-00513R000204600036-6

ILLEGIBLE

APPROVED FOR RELEASE: 06/23/11: CIA-RDP86-00513R000204600036-6

APPROVED FOR RELEASE: 06/23/11: CIA-RDP86-00513R000204600036-6

BELYAYEV, G.I.

Effect of potassium, sodium, and lithium oxides on the properties of an enamel primer not containing boron. Ukr. khim. zhur. 24 no.3:396-398 '58. (MIRA 11:9)

1.Dnepropetrovskiy khimiko-tekhnologicheskiy institut.
(Paint) (Alkali metal oxides)

APPROVED FOR RELEASE: 06/23/11: CIA-RDP86-00513R000204600036-6

APPROVED FOR RELEASE: 06/23/11: CIA-RDP86-00513R000204600036-6

Conference on Enamels and Metal Enameling SOV/72-58-12-22/25

P.G. Pauksh, Latviyskiy gosudarstvennyy universitet (Latvian State University) reported on the investigation of fritted prime enamels for coating cast iron.
V.Ya. Lokshin, Scientific Research Institute of Sanitary Engineering, spoke on the influence of chemical composition on some properties of easily fusible powder enamels.
By the LTI imeni Lensovet the following reports were given:
L.L. Gutorova on prime-less steel and aluminum enameling.
M.V. Sershryakova on non-plumbic silicate enamels for aluminum.
G.A. Kudryavtseva on slightly colored antimony enamels.
Yu.V. Mazurek on the investigation of a systematic series of oxides for obtaining blue and brown pigments.
The Novocherkassk Polytechnical Institute gave the following reports:
K.P. Azarov on new methods of enamel testing, and on the influence of iron oxide on the physico-chemical properties of the prime coat.
V.G. Zerin on the importance of the gas phase in the burning process of the prime coat.
Ye.M. Chistova on phosphate enamels.
Ye.I. Podroyzina on prime-less coats.
Collaborators of the Dnepropetrovsk Chemical-Technological Institute reported:
G.I. Belyayev on the acid content and basicity of enamels, and on the influence of the composition on some properties of prime enamels.
Yu.D. Barinov on the damping of enamels by antimony.
L.V. Furin, Leningradskiy khimiko-pishchevoy kombinat (Leningrad Chemical Foodstuff Kombinat) and S.I. Solyanik (NIIKhIMMASh) on the experiment of manufacturing enameled chemical apparatus of steel.
A.M. Semenova spoke on the causes of blistering of prime enamels at the Zaporozhskiy metiznyy zavod (Zaporozh'ye "Metiznyy" Works) and the methods of preventing this fault.
V.I. Sevchenko, Luganskiy Works imeni Artem, reported on the successful application of vibration grinding for crushing sand and non-baric enamel layers, as well as on the experiment of using white titanium enamels.
V.G. Zuyev reported on the improvement in the burning technology of enamel costs in connection with the change-over of furnaces to gas, as well as on prospects of muffle-less burning.
V.A. Oborin reported on the work of the design office of the enamel manufacture at the Lys'venskiy Metallurgic Works.
D.I. Yegorov, representative of the State Office for Planned Economy on the planned production volume for the next years, as well as on the standard specifications of borax consumption provided.

Card 4/6

Card 5/6

The members of the conference passed resolutions for obtaining an improvement in the quality of enameled products, as well as for increasing their production and creating a new technology and new production methods.

APPROVED FOR RELEASE: 06/23/11: CIA-RDP86-00513R000204600036-6

APPROVED FOR RELEASE: 06/23/11: CIA-RDP86-00513R000204600036-6

BELYAYEV, G. I.

15(2)

AUTHOR: Vargin, V.V. SOV/72-58-12-22/23

TITLE: Conference on Enamels and Metal Enameling (Soveshchaniye po emalyam i emalirovaniyu metallov)

PERIODICAL: Steklo i keramika, 1958, Nr 12, pp 47-48 (USSR)

ABSTRACT: The organizers of the conference were: Leningradskoye oblastnoye nauchno-tekhnicheskoye obshchestvo promyshlennosti stroitel'nykh materialov (Leningrad Oblast Scientific and Technical Society of the Industry of Building Materials); Leningradskiy sovnarkhoz (Leningrad Council of National Economy) and Leningradskiy tekhnologicheskiy institut imeni Lensoveta (LTI) (Leningrad Technological Institute imeni Lensovet (LTI). The program of the conference included: the most important problems of enamel synthesis, enameling of metal products and industrial apparatus. About 250 experts took part in the conference representatives from works in the UkrSSR, Ural, Novosibirsk, Ulan-Ude, Kuznetsk, Dzerzhinsk, as well as functionaries of the universities, of the scientific research and design institutes in Leningrad, Moscow, Novocherkassk, Dnepropetrovsk, Sverdlovsk, Riga, Khar'kov, and other towns. More than 40 reports were given and discussed. Professor K.S. Yevstrop'yev, director of the LTI imeni Lensovet, in his opening speech stressed the great economic importance of the problem of enameling metal products and apparatus.

Card 1/6

Ye.I. Litvinova (LTI imeni Lensovet) reported on the influence of metal quality on the formation of "fish-scales" in enameling.

A.A. Appen, Institut khimii silikatov AN SSSR (Institute of Silicate Chemistry of the AS USSR), spoke on the present stage of the problems of calculating the properties of glass and enamels according to their composition.

M.V. Serebryakova (LTI imeni Lensovet) gave a survey of foreign literature of enamels and metal enameling.

M.N. Lifshits, Nauchno-issledovatel'skiy institut sanitarnoy tekhniki (Scientific Research Institute of Sanitary Engineering) reported on the enameling of products in the electric field of a corona discharge.

Card 2/6

I.G. Petrunya, Luganskiy zavod imeni Artema (Luganskiy zavod imeni Artema) spoke of new types of enameled steel products made in this factory.

Yu.P. Nikitin, Ural'skiy politekhnicheskiy institut (Ural'skiy Polytechnical Institute) reported on the character of interaction between metals and melted enamels.

N.S. Smirnov, Ural'skiy nauchno-issledovatel'skiy institut chernykh metallov (Ural'skiy Scientific Research Institute of Ferrous Metals) reported on the influence of the condition of the steel surface on the formation of the enamel coat.

A.I. Borisenko, Institute of Silicate Chemistry of the AS USSR, spoke on the new method of obtaining thin silicate coats of semi-colloid solutions.

Ye.N. Podkletnov spoke on a new enameling method with heating of the products by high-frequency currents.

P.A. Rozhdestvenskiy, Lys'venskiy metallurgicheskiy zavod (Lys'venskiy Metallurgic Works) gave informations on new enamels used by the factory.

T.I. Polyutash, Novosibirskiy metallurgicheskiy zavod (Novosibirskiy Metallurgic Works) reported on the dependence of the moistening angle and the enamel deliquescence on the correlation of boric and non-boric silts.

Card 3/6

APPROVED FOR RELEASE: 06/23/11: CIA-RDP86-00513R000204600036-6

APPROVED FOR RELEASE: 06/23/11: CIA-RDP86-00513R000204600036-6

SOV/123-59-15-59900

Translation from: Referativnyy zhurnal. Mashinostroyeniye, 1959, Nr 15, p 142 (USSR)

AUTHOR: Belyayev, G.I.

TITLE: The Effects of Additives of Carbonates of Alkali Metals on Some Properties of Priming Enamel

PERIODICAL: Tr. Dnepropetr. khim.-tekhnol. in-t, 1958, Nr 6, pp 144 - 154

ABSTRACT: It is stated that, when small quantities of lithium and sodium carbonates are added, the wetting ability and the yield of the molten priming mass and the quality of the coating are improved. The effects of alkali oxides on the improvement of the wetting ability and yield of the molten priming mass and on the reduction of the intensity of oxidation of steel grows with the reduction of the ionic radius and the decrease in basicity of the oxide.

L.V.Ya.

Card 1/1

APPROVED FOR RELEASE: 06/23/11: CIA-RDP86-00513R000204600036-6

APPROVED FOR RELEASE: 06/23/11: CIA-RDP86-00513R000204600036-6

SOV/81-59-10-35745

Translation from: Referativnyy zhurnal. Khimiya, 1959, Nr 10, p 330 (USSR)

AUTHOR: Belyayev, G.I.

15

TITLE: On Dissolution of Steel in Primer Enamels

PERIODICAL: Tr. Dnepropetr. khim.-tekhnol. in-ta, 1958, Nr 6, pp 139-143

ABSTRACT: The action of melts of simple silicate and borate glasses, of boron and boron-free enamel frits on low-carbon sheet steel has been studied. It has been established that in the melts of silicate and borate glasses and enamels an intensive dissolution of iron takes place, which is accompanied by the separation of the gaseous phase. The iron corrosion rate depends on the chemical composition and the basicity of the silicate melt. In sodium silicates steel is more corroded than in sodium borates. Na_2O shows a stronger dissolving action on steel than B_2O_3 and SiO_2. Boron-free primer enamels oxidize steel more vigorously than boron enamels. It is assumed that the dissolution of iron in molten silicates is an electrochemical process. The method and the results of investigation and also the chemical composition of several enamels are cited.

G. Gerashchenko

Card 1/1

APPROVED FOR RELEASE: 06/23/11: CIA-RDP86-00513R000204600036-6

APPROVED FOR RELEASE: 06/23/11: CIA-RDP86-00513R000204600036-6

BELYAYEV, G.I.; SMAKOTA, N.F.

Effect of steel on certain properties of ground enamels.
Trudy DKHTI no.6:131-143 '58. (MIRA 13:11)
(Enamel and enameling) (Steel)

APPROVED FOR RELEASE: 06/23/11: CIA-RDP86-00513R000204600036-6

APPROVED FOR RELEASE: 06/23/11: CIA-RDP86-00513R000204600036-6

07995
SOV/81-59-12-43164

18.7400

Translation from: Referativnyy zhurnal. Khimiya, 1959, Nr 12, p 326 (USSR)

AUTHORS: Belyayev, G.I., Smakota, N.F.

TITLE: Effect of Some Surface-Active Additions on the Quality of Primer Enamels

PERIODICAL: Tr. Dnepropetr. khim.-tekhnol. in-ta, 1958, Nr 6, pp 120-130

ABSTRACT: It has been established that additions of small quantities of surface-active substances: metal sulfides (Sb_2S_3, $CuFeS_2$, ZnS, PbS, FeS_2), Cr_2O_3 and chromite ores to boron-free frit considerably improve the wetting and spreading capacities of the primer smelt on steel, reduce the oxidizability of the steel surface during burning of the primer coating and reduce the burnt places in the boron-free primer enamel. The substitution of feldspar during grinding by ground quartz sand with simultaneous addition of metallurgical magnesite powder or ground magnesite or chromomagnesite brick (1.5 - 3.0%) to the dross, positively affects the quality of boron-free and low-boron enamel coatings.

G. Gerashchenko

Card 1/1

APPROVED FOR RELEASE: 06/23/11: CIA-RDP86-00513R000204600036-6

APPROVED FOR RELEASE: 06/23/11: CIA-RDP86-00513R000204600036-6

67996

SOV/81-59-12-43165

18.7400

Translation from: Referativnyy zhurnal. Khimiya, 1959, Nr 12, p 326 (USSR)

AUTHOR: Belyayev, G.I.

TITLE: Effect of Some Additions on the Oxidizability of Steel in the Burning Process of Primer Enamels 16

PERIODICAL: Tr. Dnepropetr. khim.-tekhnol. in-ta, 1958, Nr 6, pp 115-119

ABSTRACT: Additions of sand, magnesite, feldspar, apatite and TiO_2 during the grinding of frit reduce the quantity of burnt places and decrease the intensity of steel oxidation during the burning of primer enamels. Additions of finely-ground magnesite and TiO_2 are most efficient. The improvement of the quality of the enamel layer with the introduction of additions is probably connected with the increase in the viscosity of the primer smelts and the development of a medium inhibiting the diffusion of oxygen ions to the steel surface and also with the change of the structure and the physical-chemical properties of the enamel layer. The chemical composition of additions is given as well as the oxidizability of steel and the quality of boron-free primer enamels, in dependence on the additions.

G. Gerashchenko

4

Card 1/1

APPROVED FOR RELEASE: 06/23/11: CIA-RDP86-00513R000204600036-6

APPROVED FOR RELEASE: 06/23/11: CIA-RDP86-00513R000204600036-6

SOV/153-58-1-15/2

Vibration Grinding of Enamel Bauges

of sand, whereas the duration of a complete boiling through of enamels is decreased by an average of from 30 to 35%. The joint grinding of all components of the enamel badges is the most efficient. Thus, the coefficient of the acceleration of the enamel boiling increases according to the type of charge from 1.33 to 1.93. 3) The introduction of the vibration grinding, besides a decrease in time of the boiling, can also improve the quality of the enamels. There are 6 figures, 3 tables, and 4 Soviet references.

ASSOCIATION: Dnepropetrovskiy khimiko-tekhnologicheskiy institut, Kafedra tekhnologii silikatov (Dnepropetrovsk Chemo-Technological Institute, Chair of Silicate Technology)

SUBMITTED: October 17, 1957

Card 3/3

APPROVED FOR RELEASE: 06/23/11: CIA-RDP86-00513R000204600036-6

APPROVED FOR RELEASE: 06/23/11: CIA-RDP86-00513R000204600036-6

SOV/[illegible]

Vibration Grinding of Enamel Badges

according to the bulk weight. Figure 1 shows the kinetic curves of the dependence of the specific surface s, the bulk weight γ and of the specific volume v upon the duration of the grinding of sand. Figure 2 gives the dependence of the interaction velocity of SiO_2 and Na_2CO_3 in a sand-soda badge upon the specific surface of the sand. From table 2 data may be seen which illustrate the effect of the vibration grinding of sand upon the loss in weight of the badge on its heating. Figures 3-5 give curves expressing the kinetics of the dependence of the weight losses of the charge upon the dispersion degree of sand during heating for 1 hour. Based upon the results obtained the authors arrive at the following conclusions: 1) The degree of dispersion of sand has a great effect upon the kinetics of the reaction between the solid phases of sodium carbonate. The enlargement of the specific surface of sand considerably accelerates the interaction between SiO_2 and Na_2CO_3 at lower temperatures. 2) A vibration grinding of sand has an effect upon the whole course of the formation process of silicates and of glass in enamel badges. The weight loss of the badges at lower temperatures increases with the degree of dispersion

Card 2/3

APPROVED FOR RELEASE: 06/23/11: CIA-RDP86-00513R000204600036-6

APPROVED FOR RELEASE: 06/23/11: CIA-RDP86-00513R000204600036-6

5(1, 2) SOV/153-58-5-15/2

AUTHORS: Belyayev, G. I., Levchenko, N. V.

TITLE: Vibration Grinding of Enamel Badges (Vibratsionnyy pomol emalevoy shikhty)

PERIODICAL: Izvestiya vysshikh uchebnykh zavedeniy. Khimiya i khimicheskaya tekhnologiya, 1958, Nr 5, pp 87-91 (USSR)

ABSTRACT: The interaction of substances in solid state is effected by the exchange of the ions that are on the surface of the reacting bodies. These ions are in a state that is the least stable. For this reason the velocity of the reactions in solid phase increases with decreasing grain size of the components, e. g. in silicate mixtures at low temperatures (Ref 1). The authors investigated in the present paper the effects of vibration grinding of the main components of enamel - sand - and of the enamel as a whole upon the silicate formation process and upon the velocity of the boiling of the enamel frit. The sand and the enamel badge were ground on a vibration mill M-10 for 30, 60 and 90 minutes. The degree of crushing was classified according to the specific surface of the powder (on the instrument by V. V. Tovarov), as well as by sieve analysis and

Card 1/3

APPROVED FOR RELEASE: 06/23/11: CIA-RDP86-00513R000204600036-6

APPROVED FOR RELEASE: 06/23/11: CIA-RDP86-00513R000204600036-6

The Influence of the Carbonates of Alkaline Metals on the Properties of Priming Enamels 72-58-3-9/15

The influence of the replacing of Na_2O by K_2O and Li_2O in the enamel-layer on the moistening angle is shown in figure 3. Data on the deliquescence of priming frits - evaluated according ot the length of drops - are seen from table 8. Conclusions: Small additions of soda and lithium carbonate in the priming schlich reduce the intensity of steel-oxidation during the burning of the priming enamels, improve the moistening of steel, increase viscosity and improve the quality of enamels.
There are 3 figures, 8 tables, and 6 references, 5 of which are Slavic.

ASSOCIATION: Dnepropetrovskiy khimiko-tekhnologicheskiy institut (Chemical Technological Institute, Dnepropetrovsk)

1. Carbonates--Chemical reactions 2. Corrosion inhibitors --Effectiveness

Card 3/3

APPROVED FOR RELEASE: 06/23/11: CIA-RDP86-00513R000204600036-6

APPROVED FOR RELEASE: 06/23/11: CIA-RDP86-00513R000204600036-6

the chemical composition of which is given in table 2, were used for the tests in which L. G. Kazankina participated (reference 1). The compositions of the mixtures for the priming experimental schlicks are seen from table 3. The influence of carbonates of alkaline metals, as well as of borax, on the oxidation of steel during the burning of the priming enamel, is shown in figures 1 and 2. The mean values of the moistening angle of the solid phase (steel) in dependence on additions of carbonates of alkaline metals are given in table 4. The viscosity of the enamel-frits with additions of carbonates of alkaline metals and borax was determined according to the process of deliquescence of a drop on an enamelled plate under an angle of 45° and at a temperature of 850°C which V. Ya. Lokshin recommended in his work. The obtained results are given in table 5 and are subsequently fully described and explained. The compositions of the layers of the boraxless enamels (in kilograms) are given in table 6. The intensity of the oxidation of steel during the burning of the priming enamels is seen from table 7.

APPROVED FOR RELEASE: 06/23/11: CIA-RDP86-00513R000204600036-6

APPROVED FOR RELEASE: 06/23/11: CIA-RDP86-00513R000204600036-6

BELYAYEV, G.I.

AUTHORS: Belyayev, G. I. 78-58-3-9/15

TITLE: The Influence of the Carbonates of Alkaline Metals on the Properties of Priming Enamels (Vliyaniye karbonatov shchelochnykh metallov na svoystva gruntovykh emaley)

PERIODICAL: Steklo i Keramika, 1958, Nr 3, pp. 33-37 (USSR)

ABSTRACT: Borax is added in view of improving the properties of the enamel schlich by which, according to G. I. Belyayev, the oxidation of steel is reduced (reference 1). P. P. Budnikov and A. M. Cherepanov and K. P. Azarov recommend in their work a small addition of lithium-oxide which accelerates the melting process and improves the look (reference 2). M. A. Bezborodov and P. F. Mikhalevich mention in their work (reference 3) that an addition of 9 to 12% spodumene improves the physico-chemical properties of a porcelain-shard. Some properties of alkaline metals are given in table 1. The author further investigates the influence of small additions of lithium-, sodium- and potassium-carbonates to the enamel schlich and the layer on some properties of the primingenamels. Priming-frits,

Card 1/3

APPROVED FOR RELEASE: 06/23/11: CIA-RDP86-00513R000204600036-6

APPROVED FOR RELEASE: 06/23/11: CIA-RDP86-00513R000204600036-6

BELYAYEV, G.I.

Using bentonites in the production of enamels. Bent. gliny Ukr. no.2:178-188 '58. (MIRA 12:12)

1.Dnepropetrovskiy khimiko-tekhnologicheskiy institut.
(Bentonite) (Enamel and enameling)

APPROVED FOR RELEASE: 06/23/11: CIA-RDP86-00513R000204600036-6

APPROVED FOR RELEASE: 06/23/11: CIA-RDP86-00513R000204600036-6

VARGIN, V.V., prof., doktor tekhn.nauk; ANTONOVA, Ye.A., kant.tekhn.nauk; GUTOROVA, L.L., starshiy nauchnyy sotrudnik; LITVINOVA, Ye.I., kand.tekhn.nauk; LUCHINSKIY, V.V., inzh.; MAZUREK, Yu.V., kand. tekhn.nauk; SENDEROVICH, V.Ya., kand.tekhn.nauk; SEREBRYAKOVA, M.V., nauchnyy sotrudnik; BELYAYEV, G.I., dotsent, kand.tekhn. nauk, retsenzent; VAULIN, V.P., kand.tekhn.nauk, retsenzent; GOMOZOVA, N.A., red.izd-va; EL'KINA, E.M., tekhn.red.; MEDVEDEV, L.Ya., tekhn.red.

[Technology of enamels and the enameling of metals] Tekhnologiia emali i emalirovaniia metallov. Pod red. V.V.Vargina. Moskva, Gos.izd-vo lit-ry po stroit., arkhit., i stroit.materialam, 1958. 393 p. (MIRA 12:3)

1. Zaveduyushchiy kafedroy tekhnologii silikatov Dnepropetrovskogo khimiko-tekhnologicheskogo instituta (for Belyayev).
(Enamels and enameling)

APPROVED FOR RELEASE: 06/23/11: CIA-RDP86-00513R000204600036-6

APPROVED FOR RELEASE: 06/23/11: CIA-RDP86-00513R000204600036-6

BELYAYEV, G.I.

BELYAYEV, G.I.

Effect of sulfide additions on certain properties of boronless priming enamels. Zhur.prikl.khim.30 no.8:1233-1236 Ag '57. (MIRA 11:1)

(Sulfides) (Enamels and enameling)

APPROVED FOR RELEASE: 06/23/11: CIA-RDP86-00513R000204600036-6

APPROVED FOR RELEASE: 06/23/11: CIA-RDP86-00513R000204600036-6

BELYAYEV, G.I.

Effect of enamel fusions on steel. Zhur.prikl.khim. 30 no.7:1077-1080 Jl '57. (MIRA 10:10)

1.Dnepropetrovskiy khimiko-tekhnologicheskiy institut.
(Steel--Corrosion)

APPROVED FOR RELEASE: 06/23/11: CIA-RDP86-00513R000204600036-6

APPROVED FOR RELEASE: 06/23/11: CIA-RDP86-00513R000204600036-6

BELYAYEV, G. I.

5
000

Chemical resistance of antimony enamels. G. I. Belyaev. Trudy Novocherkassk. Polytekh. Inst. 25, 145-58(1954). Referat. Zhur., Khim. 1955, No. 2526.—It was shown experimentally that an increase in the melting temp. of the mix lowers the chem. resistance of the frit and the enamel coating, and increases the soly. of Bi in the enamel. Substitution of metallic Bi by Na metabismuthate lowered the acid resistance of the enamel. Addn. of electrolytes such as K and Na to the enamel slurry increased the soly. of Bi in enamel coatings. Addn. of ground quartz sand to the ground frit lowered the soly. of the Bi and increased the acid resistance of the enamel coat. The highest whiteness of the enamel coating was obtained by addn. of powd. metal Bi to the batch. M. Hosch

PM

APPROVED FOR RELEASE: 06/23/11: CIA-RDP86-00513R000204600036-6

APPROVED FOR RELEASE: 06/23/11: CIA-RDP86-00513R000204600036-6

BELYAYEV, G. I.

Matt

Opacifying enamels with dark Chasov-Yarsk clay. G. I. Belyaev. *Trudy Novocherkassk. Politekh. Inst.* 25, 171-80 (1954). *Referat. Zhur., Khim.* 1955, No. 2524.—Addn. of dark Chasov-Yarsk clay causes gas opacification because this clay contains 4-5 times as much org. matter as the light clay. The opacifying action of the dark clay is most effective when as surface enamel B-free or low-B frit is used. Addn. of dark Chasov-Yarsk clay when the frit is ground increases appreciably the coeff. of diffusion reflection (the brightness of the white) of enamel coatings. Addn. of ground quartz sand and zircon improve the thermal resistance and the whiteness of the enamel layer. M. Hoseh

APPROVED FOR RELEASE: 06/23/11: CIA-RDP86-00513R000204600036-6

APPROVED FOR RELEASE: 06/23/11: CIA-RDP86-00513R000204600036-6

BELYAYEV, G.I.

Effect of charge fusion temperature on chemical resistance of frits. G. I. Belyaev (Polytech. Inst., Novocherkassk). *J. Appl. Chem. U.S.S.R.* 25, 859-61(1952); *Zhur. Priklad. Khim.* 25, 890-2(1952).—A study is made of the resistance to acids of Sb frits as affected by charge fusion temp. and the appearance of the Sb prepn. Increased charge fusion temp. reduces frit chem. resistance with relation to H_2O, and increases the soly. of Sb in AcOH. The soly. of Sb from frits contg. Na metaantimonate is significantly larger than from frits with equiv. content of metallic Sb. Bernard Rubin

L2H

APPROVED FOR RELEASE: 06/23/11: CIA-RDP86-00513R000204600036-6

APPROVED FOR RELEASE: 06/23/11: CIA-RDP86-00513R000204600036-6

[illegible], S.I.

Chemical stability of antimonic frit.
Steh. i kar., , no. 6, 1952

APPROVED FOR RELEASE: 06/23/11: CIA-RDP86-00513R000204600036-6

APPROVED FOR RELEASE: 06/23/11: CIA-RDP86-00513R000204600036-6

L 7799-66

ACC NR: AP5027899

$$W_c(p) = \frac{K_1 p}{K_2 p + 1}, \quad W_{rev}(p) = \frac{2}{(p+1)^4},$$

$$W_{in}(p) = \frac{4}{(0.8p+1)^2}, \quad W_R(p) = 0.5\left(1 + \frac{1}{2.3p}\right) \qquad (1)$$

Orig. art. has: 23 formulas, 7 figures, and 1 table.

SUB CODE: IE, MA / SUBM DATE: 17Jan64 / ORIG REF: 003

nw

Card 2/2

APPROVED FOR RELEASE: 06/23/11: CIA-RDP86-00513R000204600036-6

APPROVED FOR RELEASE: 06/23/11: CIA-RDP86-00513R000204600036-6

L 7799-66 EWT(d)/EWP(v)/EWP(k)/EWP(h)/EWP(1)

ACC NR: AP5027899 SOURCE CODE: UR/0103/65/026/011/2054/2059

AUTHOR: Belyayev, G.B. (Moscow)

ORG: None

TITLE: Graph-analytical method of calculating optimum parameters of combined systems

SOURCE: Avtomatika i telemekhanika, v. 26, no. 11, 1965, 2054-2059

TOPIC TAGS: automatic control theory, automatic control system, control circuit

ABSTRACT: The optimum adjustment of parameters of perturbation compensation systems containing dynamic links, widely encountered in automatic control practice, is being discussed. The minimum of the mean square error of the system for a given perturbation (known spectral density or spectrum) is taken as an optimization criterion. The proposed method of graph-analytical calculation permits the determination of the optimum adjustment parameters even for systems the transfer functions of which are irrational or specified by graphs. The procedure is applied to an illustrative example of a system in which the optimum parameters of the compensator $W_c(p)$ (other transfer functions are given) are chosen for the case of a signal $x_{in}(t)$; the spectrum of the square of its modulus is given by $\Phi_{in}(\omega) = 1/\omega^2$ and

Card 1/2 UDC: 62-5

APPROVED FOR RELEASE: 06/23/11: CIA-RDP86-00513R000204600036-6

APPROVED FOR RELEASE: 06/23/11: CIA-RDP86-00513R000204600036-6

RAFALOVICH, S.S., BELYAYEV, G.A., (Latviya)

Dislocation of the eyeball with avulsion of the optic nerve.
Vest.oft. 71 no.3:34 My-Je '58 (MIRA 11:9)
(EYE--WOUNDS AND INJURIES)

APPROVED FOR RELEASE: 06/23/11: CIA-RDP86-00513R000204600036-6

APPROVED FOR RELEASE: 06/23/11: CIA-RDP86-00513R000204600036-6

BELYAYEV, G.A. (g. Baltiysk)

Prolonged accommodation spasm. Vest.oft.70 no.3:30-31 My-Je '57.
(MLRA 10:8)

(ACCOMMODATION, OCULAR
prolonged spasm)

APPROVED FOR RELEASE: 06/23/11: CIA-RDP86-00513R000204600036-6

APPROVED FOR RELEASE: 06/23/11: CIA-RDP86-00513R000204600036-6

BELYAYEV, G., radist (Rybinsk)

Prevented explosion. Pozh.delo 8 no.4:21 Ap '62. (MIRA 15:4)
(Fireboats)

APPROVED FOR RELEASE: 06/23/11: CIA-RDP86-00513R000204600036-6

APPROVED FOR RELEASE: 06/23/11: CIA-RDP86-00513R000204600036-6

YAKOVLEVA, O., nauchnyy sotrudnik; BELYAYEV, G.

It seems... [Un.nat. no.6:35 Je '60. (MIRA 13:8)
(Abnormalities (Plants))
(Birds--Habits and behavior)

APPROVED FOR RELEASE: 06/23/11: CIA-RDP86-00513R000204600036-6

APPROVED FOR RELEASE: 06/23/11: CIA-RDP86-00513R000204600036-6

BELYAYEV, G.

Belyayev, G. - "Noreids of the Caspian Sea", (The food source for industrial fish), Vokrug sveta, 1949, No. 5, p. 44-46.

SO: U-4631, 16 Sept. 53, (Letopis 'Zhurnal 'nykh Statey, No. 24, 1949).

APPROVED FOR RELEASE: 06/23/11: CIA-RDP86-00513R000204600036-6

APPROVED FOR RELEASE: 06/23/11: CIA-RDP86-00513R000204600036-6

KUZNETSOV, A.I.; BELYAYEV, F.V.; BYSTRITSKAYA, V.V., inzh., red.; SMIRNOVA, G.V., tekhn. red.

[Problems in descriptive geometry] Sbornik zadach po nachertatel'noi geometrii. 2. izd., dop. Moskva, Mashgiz, 1963. 105 p. (MIRA 16:9)
(Geometry--Problems, exercises, etc.)

APPROVED FOR RELEASE: 06/23/11: CIA-RDP86-00513R000204600036-6

APPROVED FOR RELEASE: 06/23/11: CIA-RDP86-00513R000204600036-6

AKOL'ZIN, L.Ye.; BEDILO, V.Ye.; BOROZDOV, I.A.; VINARSKIY, I.S.; GOLOVATYUK, S.A.; NIKOLAYEV, G.P. Prinimali uchastiye: DATSUN, N.V.; ZHEGOV, V.T.; IVANITSKAYA, S.Yu.; KOMISSAROV, M.A.; KALINCHUK, I.G.; LISHBERGOV, V.D.; SEREBRENNIKOVA, S.O.; FILIN, V.D. DUGIN, Ye.V., otv.red.; DUKALOV, M.F., red.; BUBYR', V.A., red.; TYUTYUNIK, Ya.I., red.; VARSHAVSKIY, I.N., red.; MONIN, M.I., red.; PANCHENKO, A.I., red.; BELYAYEV, F.R., red.; RABINKOVA, L.K., red.izd-va; BOLDYREVA, Z.L., tekhn.red.

[Types of mine cross section] Tipovye secheniia gornykh vyrabotok. Moskva, Gos.nauchno-tekhn.izd-vo lit-ry po gornomu delu. Vol.5. [Cross section of mines with reinforced-concrete supports and hinge-hung crossbars for 1-, 2- and 3-ton railroad cars] Secheniia vyrabotok, zakreplennykh zhelezobetonnymi stoikami s sharnirno-podvesnym vekhniakom, dlia 1-, 2- i 3-tonnykh vagonetok. 1960. 411 p. (MIRA 13:12)

1. Khar'kov. Gosudarstvennyy proyektnyy institut Yuzhgiproshakht.
(Mine timbering)

APPROVED FOR RELEASE: 06/23/11: CIA-RDP86-00513R000204600036-6

APPROVED FOR RELEASE: 06/23/11: CIA-RDP86-00513R000204600036-6

AKOL'ZIN, L.Ye.; BOROZDOV, I.A.; BEDILO, V.Ye.; TERESHKIN, F.N. Prinimali uchastiye: BELYAYEV, F.R.; BEREZHNOY, N.V.; BUBYR', V.A.; VARSHAVSKIY, I.N.; DUDKO, V.P.; YERSHOV, V.S.; DUGIN, Ye.V.; DUKALOV, M.F.; IVANOV, P.S.; KONAREVA, V.F.; MONIN, M.I.; MOGILKO, A.P.; PANCHENKO, A.I.; POKALYUKOV, S.N.; PRIKHOD'KO, N.D.; RUBIN, I.A.; SIDORENKO, P.A.; TYUTYUNIK, Ya.I.; KHMEL'NITSKIY, L.Ya.; BONDAR', V.I.; KRIVTSOV, A.T.; LOKSHIN, V.D.; SOFIYENKO, N.P. RABINKOVA, L.K., red.izd-va; BOLDYREVA, Z.A., tekhn.red.

[Types of mine cross section] Tipovye secheniia gornykh vyrabotok. Moskva, Gos.nauchno-tekhn.izd-vo lit-ry po gornomu delu. Vol.4. [Cross section of mines supported by a sectional reinforced-concrete lining of URP-11 panels for 1-, 2- and 3-ton railroad cars] Secheniia vyrabotok, zakreplennykh sbornoi zhelezobetonnoi krep'iu iz plit URP-II, dlia 1-, 2- i 3-tonnykh vagonetok. 1960. 278 p. (MIRA 13:12)

1. Khar'kov. Gosudarstvennyy proyektnyy institut Yuzhgiproshakht. (Mine timbering)

APPROVED FOR RELEASE: 06/23/11: CIA-RDP86-00513R000204600036-6

APPROVED FOR RELEASE: 06/23/11: CIA-RDP86-00513R000204600036-6

BELYAYEV, F.R.

BEDILO, V.Ye.; BOROZDOV, I.A.; YERSHOV, V.S.; MOGILKO, A.P.; NIKOLAYEV, G.P.; DUGIN, Ye.V., otv.red.; DUKALOV, M.F., red.; BUBYR', V.A., red.; VARSHAVSKIY, I.N., red.; TYUTYUNIK, Ya.I., red.; MONIN, M.I., red.; PANCHENKO, A.I., red.; BELYAYEV, F.R., red.; RABINKOVA, L.K., red.izd-va; BOLDYREVA, Z.A., tekhn.red.

[Standard cross sections of mine workings] Tipovye secheniia gornykh vyrabotok. Moskva, Gos.nauchno-tekhn.izd-vo lit-ry po gornomu delu. Vol.2. [Cross section of workings lined with concrete and artificial stone, for 1-ton cars] Secheniia vyrabotok, zakreplennykh betonom i iskusstvennym kamnem, dlia 1-tonnykh vagonetok. 1960. 459 p. (MIRA 13:11)

1. Moscow. Gosudarstvennyy proyektnyy institut Yuzhgiproshakht. (Mining engineering)

APPROVED FOR RELEASE: 06/23/11: CIA-RDP86-00513R000204600036-6

APPROVED FOR RELEASE: 06/23/11: CIA-RDP86-00513R000204600036-6

AKOL'ZIN, L.Ye.; BEDILO, V.Ye.; BOROZDOV, I.A.; LISHBERGOV, V.D.; TSOY, D.; DUGIN, Ye.V., otv.red.; DUKALOV, M.F., red.; BUBYR', V.A., red.; TYUTYUNIK, Ya.I., red.; MONIN, M.I., red.; PANCHENKO, A.I., red.; BELYAYEV, F.R., red.; RABINKOVA, L.K., red.izd-va; KOROVENKOVA, Z.A., tekhn.red.

[Standard cross sections of mine workings] Tipovye secheniia gornykh vyrabotok. Moskva, Gos.nauchno-tekhn.izd-vo lit-ry po gornomu delu. Vol.3. [Cross section of workings lined with concrete and artificial stone for 2 and 3-ton cars] Secheniia vyrabotok, zakreplennykh betonom i iskusstvennym kamnem, dlia 2- i 3-tonnykh vagonetok. 1960. 447 p. (MIRA 13:11)

1. Moscow. Gosudarstvennyy proyektnyy institut Yuzhgiproshakht. (Mining engineering)

APPROVED FOR RELEASE: 06/23/11: CIA-RDP86-00513R000204600036-6

APPROVED FOR RELEASE: 06/23/11: CIA-RDP86-00513R000204600036-6

AKOL'ZIN, L.Ye.; LISHBERGOV, V.D.; SHCHUKINA, G.F.; TSOY, D.; DUGIN, Ye.V., otv.red.; DUKALOV, M.F., red.; BUBYR', V.A., red.; TYUTYUNIK, Ya.I., red.; MONIN, M.I., red.; PANCHENKO, A.I., red.; VARSHAVSKIY, I.N., red.; BELYAYEV, F.R., red.; RABINKOVA, L.K., red.izd-va; KOROVENKOVA, Z.A., tekhn.red.

[Standard cross sections of mine workings]Tipovye secheniia gornykh vyrabotok. Moskva, Gos.nauchno-tekhn.izd-vo lit-ry po gornomu delu. Vol.1. [Cross section of timber-supported workings for 1, 2, and 3-ton cars] Secheniia vyrabotok, zakreplennykh derevom dlia 1, 2 i 3-tonnykh vagonetok. 1960. 345 p. (MIRA 13:11)

1. Moscow. Gosudarstvennyy proyektnyy institut Yuzhgiproshakht. (Mining engineering)

APPROVED FOR RELEASE: 06/23/11: CIA-RDP86-00513R000204600036-6

APPROVED FOR RELEASE: 06/23/11: CIA-RDP86-00513R000204600036-6

RATYNSKIY, V.; IGNAT'YEV, K.G.; KIRPICHNIKOV, I.V.; BELYAYEV, F.N.; SUKHORUCHKIN, S.I.

Gamma-ray spectra produced in resonance neutron capture. Zhur. eksp. i teor. fiz. 45 no.4:870-874 O '63. (MIRA 16:11)

1. Institut teoreticheskoy i eksperimental'noy fiziki.

APPROVED FOR RELEASE: 06/23/11: CIA-RDP86-00513R000204600036-6

APPROVED FOR RELEASE: 06/23/11: CIA-RDP86-00513R000204600036-6

BELYAYEV, Fedor Kharitonovich, starshiy prepodavatel'

Possibility of increasing the actual power coefficient of three-phase asynchronous motors by means of forced rotor oscillations. Izv. vys. ucheb. zav.; elektromekh. 7 no.7: 858-867 '64. (MIRA 18:5)

1. Novosibirskiy sel'skokhozyaystvennyy institut.

APPROVED FOR RELEASE: 06/23/11: CIA-RDP86-00513R000204600036-6

APPROVED FOR RELEASE: 06/23/11: CIA-RDP86-00513R000204600036-6

1. BELYAYEV, F.

2. USSR (600)

4. Technology

7. Crystal detectors and boosters. Moscow, Gosenergoizdat, 1951

9. Monthly List of Russian Accessions, Library of Congress, February 1953, Unclassified.

APPROVED FOR RELEASE: 06/23/11: CIA-RDP86-00513R000204600036-6

APPROVED FOR RELEASE: 06/23/11: CIA-RDP86-00513R000204600036-6

USSR / General Biology. Individual Development. Sex Cells. B

Abs Jour : Ref Zhur - Biologiya, No 4, 1959, No. 14359

of activation of the latter is hydration of the protoplasm. The sperm heads of S become dilated in hypo-, iso-, and hypertonic solutions. If the medium contains colloids in the amount which produces an osmotic pressure equal to the oncotic pressure of blood proteins, S remain immobile. The author maintains that in egg cells which are contained in the ovarian fluid, the formation of perivitelline space is also impeded by the protein colloids which are dissolved in the latter. -- A. G. Andres

Card 2/2

APPROVED FOR RELEASE: 06/23/11: CIA-RDP86-00513R000204600036-6

APPROVED FOR RELEASE: 06/23/11: CIA-RDP86-00513R000204600036-6

USSR / General Biology. Individual Development. Sex Cells. B

Abs Jour : Ref Zhur - Biologiya, No 4, 1959, No. 14359

Author : Belyayev, E. V.
Inst : Moscow Institute of the Fish Industry and Economy
Title : Some Characteristics of the Physiology of the Sperms and Eggs of Fish

Orig Pub : Tr. Mosk. techn. in-ta rybn. prom-sti i kh-va, 1957, vyp 8, 271-277

Abstract : In distilled and pond water the spermatozoids (S) of carp, groundling and frog remain active for the same length of time. The time of active motility and the number of mobile S decreased with the rise of the osmotic pressure. The author presumes that the cause

Card 1/2

APPROVED FOR RELEASE: 06/23/11: CIA-RDP86-00513R000204600036-6

APPROVED FOR RELEASE: 06/23/11: CIA-RDP86-00513R000204600036-6

ACC NR: AP6034659

sintered mass with 15-20% HCl at the temperature of hydrolysis of the titanium compounds produces high-quality titanium dioxide (95-97%) in the precipitate. Orig. art. has: 2 figures and 1 table.

SUB CODE: 07/ SUBM DATE: none

Card 2/2

APPROVED FOR RELEASE: 06/23/11: CIA-RDP86-00513R000204600036-6

APPROVED FOR RELEASE: 06/23/11: CIA-RDP86-00513R000204600036-6

ACC NR: AP6034659 (A) SOURCE CODE: UR/0436/66/000/003/0005/0008

AUTHOR: Safiullin, N. Sh.; Belyayev, E. K. (Candidate of Technical Sciences)

ORG: none

TITLE: Production of high-quality titanium dioxide from converted chromium-containing ilmenites by alkaline decomposition

SOURCE: Khimicheskaya promyshlennost' Ukrainy, no. 3, 1966, 5-8

TOPIC TAGS: titanium oxide, chromium oxide, iron oxide

ABSTRACT: In a study of alkaline decomposition of ilmenites containing Cr_2O_3, ilmenite concentrates mixed with sodium carbonate were subjected to oxidative roasting in order to convert the chromium and aluminum compounds to a water-soluble form and the iron compounds to an acid-soluble form. When small amounts (5-15%) of Na_2CO_3 are added, the latter is expended mainly on the formation of intermediate compounds during sintering, i. e., the Na_2O molecule penetrates into the crystal lattice of ilmenite to form new stable bonds. Larger amounts of Na_2CO_3 displace Fe_2O_3 from the intermediate compounds, forming sodium titanates. The optimum content of Na_2CO_3 (in pts. by wt.) in the charge is expressed by the general formula $Na_2CO_3 = 1.36\ Cr_2O_3 + 0.47\ TiO_2 + 0.96\ Al_2O_3 + 0.71\ SiO_2$. Introduction into the soda-ilmenite charge of the fluxes NaCl and a eutectic mixture of 69.50% Na_2SO_4 and 30.5% NaCl increases the degree of oxidation of Cr_2O_3 and the alkaline decomposition of ilmenite. Decomposition of the

Card 1/2 UDC: 546.824

APPROVED FOR RELEASE: 06/23/11: CIA-RDP86-00513R000204600036-6

APPROVED FOR RELEASE: 06/23/11: CIA-RDP86-00513R000204600036-6

L 2795-66

ACCESSION NR: AP5021450

ENCLOSURE: 01

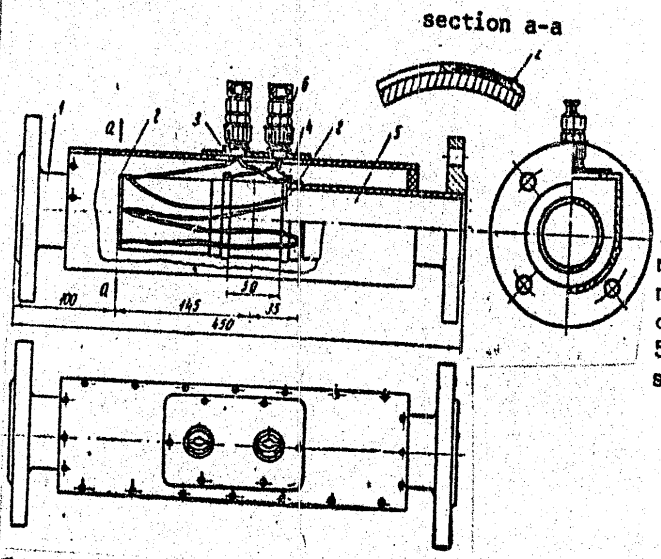

Fig. 1. Diagram of the flowmeter: 1--gauge pipe; 2--thermocouple junctions; 3--semiconductor heater; 4--contact rings; 5--vinyl jacket; 6--hermetically sealed connector

BVK

Card 3/3

APPROVED FOR RELEASE: 06/23/11: CIA-RDP86-00513R000204600036-6

APPROVED FOR RELEASE: 06/23/11: CIA-RDP86-00513R000204600036-6

L 2795-66

ACCESSION NR: AP5021450

coppel pairs with ten thermocouples in each group. The junctions of one group are located 145 mm from the center of the heater, while those of the other group are placed 35 mm downstream from the center of the heater. Differential connection of the hyperthermocouple eliminates the necessity for thermostatic control of the cold junctions. A diagram of the flowmeter is shown in fig. 1 of the Enclosure. Experimental tests were made on measuring the flow of water through a pipe 63 mm in diameter. Rates of flow were varied from 250 to 10,000 liters per hour. Calibration curves are given for various semiconductor heater powers. It was found that there is a nonlinear relationship between temperature drop and flow rate. The greatest sensitivity is in the region below 3000 ℓ/hr, while the least sensitive region is above 5000 ℓ/hr. Sensitivity increases with heater power throughout the entire measurement range. It is recommended that the lower limit of measurements for a given meter should be set at 20% of the maximum rate of flow. This gives a more uniform scale. A heater power of about 45 watts should be used for the widest measurement range. Circuit alterations are suggested for compensation of measurement errors due to temperature changes in the input flow. The instrument was tested for two months on an average of six hours a day. Measurement errors are less than ±3% of the maximum scale value. Orig. art. has: 2 figures.

ASSOCIATION: none

SUBMITTED: 05Oct64

ENCL: 01

Card 2/3

NO REF SOV: 004

SUB CODE: IE, ME

OTHER: 000

APPROVED FOR RELEASE: 06/23/11: CIA-RDP86-00513R000204600036-6

APPROVED FOR RELEASE: 06/23/11: CIA-RDP86-00513R000204600036-6

L 2795-66 EWT(d)/EWT(1)/EPF(n)-2/EWP(v)/EWP(k)/EWP(h)/EWP(1)/EWA(h)/ETC(m)

ACCESSION NR: AP5021450 WW/AT UR/0146/65/008/004/0123/0126

681.121

AUTHOR: Korotkov, P. A.; Belyayev, D. V.; Rukin, Ya. V.

TITLE: A noncontact thermal flowmeter with a semiconductor heater for up to 10,000 liters per hour

SOURCE: IVUZ. Priborostroyeniye, v. 8, no. 4, 1965, 123-126

TOPIC TAGS: flow meter, fluid flow, thermocouple, semiconductor device

ABSTRACT: The characteristics of a noncontact thermal flowmeter are studied. The instrument operates on the basis of finding the deformation of a temperature field generated by a heater on the outer surface of the pipe through which the liquid is flowing. This deformation is a single-valued function of the rate of flow when the parameters of the liquid and those of the ambient medium are stable. The heater is a semiconducting layer of stannous chloride applied over titanium enamel. Electric current is fed to the heater from a voltage regulator through copper contact rings fastened to the pipe with a distance of 50 mm between them. The sensing element for measuring the temperature difference is a chromel-coppel thermocouple fastened to the outside surface of the pipe. The sensitivity of the instrument is improved by using a differential hyperthermocouple consisting of two sets of these chromel-

Card 1/3

APPROVED FOR RELEASE: 06/23/11: CIA-RDP86-00513R000204600036-6

APPROVED FOR RELEASE: 06/23/11: CIA-RDP86-00513R000204600036-6

BELYAYEV, Dmitriy Vasil'yevich; VORONKOV, N.A., inzh., retsenzent; UZHEVSKIY, G.S., inzh., retsenzent; SHEYN, Ya.P., inzh., red.; EL'KIND, L.M., red.izd-va; KARASEV, A.I., tekhn.red.

[Metallurgy of tin; manual for the training of qualified workers in industry] Metallurgiia olova; uchebnik dlia podgotovki kvalifitsirovannykh rabochikh na proizvodstve. Moskva, Gos.nauchno-tekhn.izd-vo lit-ry po chernoi i tsvetnoi metallurgii, 1960. 94 p. (MIRA 13:5)
(Tin--Metallurgy)

APPROVED FOR RELEASE: 06/23/11: CIA-RDP86-00513R000204600036-6

APPROVED FOR RELEASE: 06/23/11: CIA-RDP86-00513R000204600036-6

The automation of the process of preparation of S/282/63/000/001/002/011
A059/A126

the continuous preparation of the aqueous solution of ammonia (amines and sodium hydroxide) of given concentration with an accuracy of its maintenance equal to ± 1 - 3 g/l is described. There are 2 figures and 3 references.

[Abstracter's note: Complete translation]

Card 2/2

APPROVED FOR RELEASE: 06/23/11: CIA-RDP86-00513R000204600036-6

APPROVED FOR RELEASE: 06/23/11: CIA-RDP86-00513R000204600036-6

S/282/63/000/001/002/011
A059/A126

AUTHORS: Belyayev, D.V., Zobnin, V.P.

TITLE: The automation of the process of preparation of aqueous solutions of ammonia, amines, and sodium hydroxide

PERIODICAL: Referativnyy zhurnal, otdel'nyy vypusk, 47. Khimicheskoye i kholodil'noye mashinostroyeniye, no. 1, 1963, 3, abstract 1.47.14 (Vestn. tekhn. i ekon. inform. N.-i. in-t tekhn.-ekon. issled. Gos. kom-ta Sov. Min. SSSR po khimii, no. 2, 1962, 31 - 34)

TEXT: A novel typical program of automatic control for the continuous preparation processes of binary solutions of given concentration was developed at the Gosudarstvennyy in-t prikladnoy khimii (State Institute of Applied Chemistry) which has been tested and introduced into production in many enterprises of the chemical industry. This program secures the maintenance, within given limits, of uniform concentration, temperature, and level of the solution in the reactor, feeding of the initial components, and discharge of the working solution prepared from the reactor in the amounts required. The automation program for

Card 1/2

APPROVED FOR RELEASE: 06/23/11: CIA-RDP86-00513R000204600036-6

APPROVED FOR RELEASE: 06/23/11: CIA-RDP86-00513R000204600036-6

BELYAYEV, D.L.

Effect of the conditions of 5-bromouracil incorporation on the induction of r- and h-mutations in the T2 phage. Genetika no. 6: 24-29 D '65 (MIRA 19:1)

1. Institut epidemiologii i mikrobiologii imeni Gamalei AMN SSSR.

APPROVED FOR RELEASE: 06/23/11: CIA-RDP86-00513R000204600036-6

APPROVED FOR RELEASE: 06/23/11: CIA-RDP86-00513R000204600036-6

SOV/68-59-3-7/23

The Determination of the Velocity of Movement of Coke Lumps in Dry Quenching Chambers Using Radioactive Cobalt

distribution of velocities and therefore can be neglected. There are 4 figures and 1 table.

ASSOCIATION: Khar'kovskiy Aviatsionnyy Institut (Kharkov Aviation Institute) and Ukrenergochermet

Card 3/3

APPROVED FOR RELEASE: 06/23/11: CIA-RDP86-00513R000204600036-6

APPROVED FOR RELEASE: 06/23/11: CIA-RDP86-00513R000204600036-6

SOV/68-59-3-7/23

The Determination of the Velocity of Movement of Coke Lumps in Dry Quenching Chambers Using Radioactive Cobalt

found that the distribution of velocities of descent of coke lumps in a round chamber is more uniform than in a chamber with a rectangular cross section. At an angle of inclination of the discharging part of the chamber of $\varphi - 65^{\circ}$ the distribution of velocities of movement of coke is more uniform than at $\varphi - 55^{\circ}$. Various types of the distributors of the flow of coke and their position in the quenching chamber of a round cross section have little influence on the distribution of velocities of coke lumps. Shifting downwards of the flow distributor (in the quenching camera of the rectangular cross section) from the position shown in Fig.1, has no practical influence on the distribution of velocities of lumps of coke. The segregation of coke lumps during charging into the quenching camera has little influence on the

Card 2/3

APPROVED FOR RELEASE: 06/23/11: CIA-RDP86-00513R000204600036-6

APPROVED FOR RELEASE: 06/23/11: CIA-RDP86-00513R000204600036-6

SOV/68-59-3-7/23

AUTHORS: Belyayev, D.L., and Zaturenskiy, Z.L.

TITLE: The Determination of the Velocity of Movement of Coke Lumps in Dry Quenching Chambers Using Radioactive Cobalt (Opredeleniye skorosti dvizheniya kuskov koksa v kamerakh sukhogo tusheniya pri pomoshchi radioaktivnykh izotopov kobal'ta)

PERIODICAL: Koks i Khimiya, 1959, Nr 3, pp 34-37 (USSR)

ABSTRACT: In order to provide design data for the installations for dry quenching of coke, an investigation of the basic process of dry quenching of coke has been carried out on cold models. Two types of quenching chambers were studied: of a rectangular (fig 1) and round cross section. Each model had two modifications of the discharging part with an inclination angle φ - 55 and 65°. The model of the round quencher was tested with a few modifications of the coke flow distributor (fig 3 and the table). The models were made in 1/15 of the natural scale. The determination of the velocity of movement of coke in quenchers was done by introducing into one coke lump a cobalt pellet (2 m Cu) and its rate of descent determined by placing a recording counter (fig 4) behind a lead screen with slits. It was

Card 1/3

APPROVED FOR RELEASE: 06/23/11: CIA-RDP86-00513R000204600036-6

APPROVED FOR RELEASE: 06/23/11: CIA-RDP86-00513R000204600036-6

BELYAYEV, D.K.; YEVSIKOV, V.I.

Pseudoallelic relations of some color genes in the mink (Mustela vision Schreb.). Genetika no.3:3-10 S '65.

(MIRA 18:12)

1. Institut tsitologii i genetiki Sibirskogo otdeleniya AN SSSR, Novosibirsk. Submitted July 5, 1965.

APPROVED FOR RELEASE: 06/23/11: CIA-RDP86-00513R000204600036-6

APPROVED FOR RELEASE: 06/23/11: CIA-RDP86-00513R000204600036-6

BELYAYEV, D.K.; TRUT, L.N.

Correlative changes in selective breeding for domestication.
Biul. MOIP. Otd. Biol. 69 no.4:5-14 Jl-Ag '64.
(MIRA 17:11)

APPROVED FOR RELEASE: 06/23/11: CIA-RDP86-00513R000204600036-6