"APPROVED FOR RELEASE: 06/08/2000 CIA-RDP86-00513R000204910009-6

ACCESSION NR: AT4043273 S/2744/64/000/007/0036/0046

AUTHOR: Masagutov, R. M., Berg, G. A., Kirillov, T. A., Varfolomeyev, D. F., Kulinich, G. M., Skundina, L. Ya.

TITLE: Methods for decreasing the hydrogen consumption during hydrofining of Diesel fuel from high-sulfur petroleum

SOURCE: Ufa. Bashkirskiy nauchno-issledovatel'skiy institut po pererabotke nefti, Trudy*, no. 7, 1964. Sernisty*ye nefti i produkty* ikh pererabotki (Sour crude oil and products of refining), 36-46

TOPIC TAGS: petroleum, Diesel fuel, desulfurization, hydrogen consumption, hydrocarbon, naphthenic hydrocarbon, dehydrogenation, petroleum refining, hydrofining, high sulfur petroleum, Arlan petroleum

ABSTRACT: Since the main difficulty in the hydrofining of petroleum is supplying the refinery with hydrogen, the authors attempted to utilize the hydrogen liberated during the process itself as a result of dehydrogenation of the naphthenic hydrocarbons in the raw material. An Arlan petroleum fraction (density 0.863, sulfur content 2.58%, iodine

APPROVED FOR RELEASE: 06/08/2000 CIA-RDP86-00513R000204910009-6"

"APPROVED FOR RELEASE: 06/08/2000 CIA-RDP86-00513R000204910009-6

ACCESSION NR: AT4043273

number 9.4%, sulfurization 34.7%) was used as a test sample in a closed system in which a gas containing 90% hydrogen circulated over a technical aluminum-cobalt-molybdenum catalyst. The effect of different factors, such as temperature, pressure and feed rate, on the degree of desulfurization, iodine number, hydrogen consumption and the duration of action of the catalyst was investigated. The hydrogen consumption was determined both by the variation in the composition of raw material and desulfurized product and by direct measurement. It was found that decreasing the pressure from 50 to 30 atm. and increasing the temperature from 380 to 410C during refining decreases the hydrogen consumption by 27%. Under these conditions, the technical aluminum-cobalt-molybdenum catalyst has a long life and ensures a product of good quality. Hydrofining at a pressure of 20 atm. and temperature of 410C cannot be recommended, even though this reduces the hydrogen consumption by an additional 21%, because the lifetime of the catalyst between regenerations is insufficient. A prolonged catalytic action is made possible by lowering the temperature to 350C. At this temperature, the hydrogen consumption can be decreased by 35-50% while maintaining the extent of desulfurization at 70-80%. Orig. art. has: 12 figures and 6 tables.

Card 2/3

APPROVED FOR RELEASE: 06/08/2000 CIA-RDP86-00513R000204910009-6"

"APPROVED FOR RELEASE: 06/08/2000 CIA-RDP86-00513R000204910009-6

ACCESSION NR: AT4043273

ASSOCIATION: Bashkirskiy nauchno-issledovatel'skiy institut po pererabotke nefti, Ufa (Bashkir Scientific Research Institute for Petroleum Refining)

SUBMITTED: 00 ENCL: 00

SUB CODE: FP NO REF SOV: 005 OTHER: 000

Card 3/3

APPROVED FOR RELEASE: 06/08/2000 CIA-RDP86-00513R000204910009-6"

"APPROVED FOR RELEASE: 06/08/2000 CIA-RDP86-00513R000204910009-6

ACCESSION NR: AT4043277 S/2744/64/000/007/0121/0127

AUTHOR: Masagutov, R. M., Berg, G. A., Varfolomeyev, D. F., Selivanov, T. I., Bugay, Ye. A., Kulinich, G. M., Sokolova, V. I., Mukhametov, M. N.

TITLE: Purification of benzene by chemisorption

SOURCE: Ufa. Bashkirskiy nauchno-issledovatel'skiy institut po pererabotke nefti. Trudy*, no. 7, 1964. Sernisty*ye nefti i produkty* ikh pererabotki (Sour crude oil and products of refining), 121-127

TOPIC TAGS: benzene, desulfurization, chemisorption, nickel kieselguhr catalyst, thiophene, carbon disulfide, cyclohexane, purification

ABSTRACT: Since neither sulfuric acid treatment nor hydrofining guarantee complete removal of sulfur from benzene, the authors investigated the chemical desulfurization of a benzene sample containing 0.08% (by weight) thiophene, 0.0102% carbon disulfide and 0.3% cyclohexane, using a commercial nickel catalyst on kieselguhr (0.93 g/cc bulk density) with 60% nickel. Desulfurization was more effective at higher temperatures than at room temperature. The high degree of purification obtained at 170-180C may be due both to a better contact between the benzene and the catalyst and a higher diffusion rate. When benzene samples were purified at 170-180C with the addition of hydrogen, the adsorptivity of the catalyst was increased 4.4 times as compared to the usual adsorption conditions. This

Card 1/2

APPROVED FOR RELEASE: 06/08/2000 CIA-RDP86-00513R000204910009-6"

"APPROVED FOR RELEASE: 06/08/2000 CIA-RDP86-00513R000204910009-6

ACCESSION NR: AT4043277

important finding verified the mechanism of chemisorption and showed that the sulfur-adsorbing capacity and selectivity of the catalyst are important factors. The working "sulfur-capacity" of nickel over kieselguhr is 1.33% for thiophenic sulfur under the following recommended experimental conditions: atm. pressure, 150-180C, feed rate of raw material 1.0 hr^{-1}, hydrogen 10-30 vol. per vol. of benzene. The duration of action of a catalyst depends especially on its sulfur-adsorbing capacity; therefore, the purified benzene was investigated for sulfur content plotted against the time of catalysis. Sixty liters of benzene purified with 1 liter of catalyst showed no sulfur in the sample, but on further use of this same catalyst, sulfur appeared in gradually increasing amounts. It was found that 60-70 liters of benzene containing 0.03% sulfur could be purified with 1 liter of catalyst. The sulfur distribution in the catalyst with height of the layer in the reactor is also shown. On the basis of the experimental data, nickel on kieselguhr is recommended as a catalyst for the desulfurization of benzene. Orig. art. has: 4 figures.

ASSOCIATION: Bashkirskiy nauchno-issledovatel'skiy institut po pererabotke nefti, Ufa (Bashkir Scientific Research Institute for Petroleum Refining)

SUBMITTED: 00 ENCL: 00

Card 2/2 SUB CODE: OC, FP NO REF SOV: 009 OTHER: 006

APPROVED FOR RELEASE: 06/08/2000 CIA-RDP86-00513R000204910009-6"

"APPROVED FOR RELEASE: 06/08/2000 CIA-RDP86-00513R000204910009-6

MASAGUTOV, R.M.; BERG, G.A.; VARFOLOMEYEV, D.F.; SELIVANOV, T.I.; BUGAY, Ye.A.; MUKHAMETOV, M.N.; KULINICH, G.M.; SOKOLOVA, V.I.; KIRILLOV, T.S.

Hydrogenation of benzene on a nickel catalyst on kieselguhr. Trudy BashNII NP no.7:127-133 '64. (MIRA 17:9)

APPROVED FOR RELEASE: 06/08/2000 CIA-RDP86-00513R000204910009-6"

"APPROVED FOR RELEASE: 06/08/2000 CIA-RDP86-00513R000204910009-6

MASAGUTOV, R.M.; BERG, G.A.; VARFOLOMEYEV, D.F.; SELIVANOV, T.I.; BUGAY, Ye.A.; MUKHAMETOV, M.N.; KULINICH, G.M.; SOKOLOVA, V.I.

Developing a process for obtaining cyclohexane of high purity. Khim. i tekh. topl. i masel 9 no.5:17-22 5 My'64 (MIRA 17:7)

1. Bashkirskiy nauchno-issledovatel'skiy institut po pererabotke nefti i Ufimskiy neftepererabatyvayushchiy zavod.

APPROVED FOR RELEASE: 06/08/2000 CIA-RDP86-00513R000204910009-6"

"APPROVED FOR RELEASE: 06/08/2000 CIA-RDP86-00513R000204910009-6

BERG, G.A.; MASAGUTOV, R.M.; VOL'FSON, I.S.; KIRILLOV, T.S.; CHEKOVINSKIY, M.I.; KHARITSKAYA, R.Z.

Hydropurification of thermal cracking reflux. Trudy Bash NIINP no.5: 69-77 '62. (MIRA 17:10)

APPROVED FOR RELEASE: 06/08/2000 CIA-RDP86-00513R000204910009-6"

"APPROVED FOR RELEASE: 06/08/2000 CIA-RDP86-00513R000204910009-6

MASAGUTOV, R.M.; BERG, G.A.; VOLKOVA, L.I.

Preparing raw stocks for catalytic cracking by hydropurification. Trudy Bash NIINP no.5:77-88 '62. (MIRA 17:10)

APPROVED FOR RELEASE: 06/08/2000 CIA-RDP86-00513R000204910009-6"

"APPROVED FOR RELEASE: 06/08/2000 CIA-RDP86-00513R000204910009-6

MASAGUTOV, R.M.; BERG, G.A.; VOLKOVA, L.I.; PLOTNIKOVA, L.I.; PECHNIKOVA, T.N.; ZAGRYADSKAYA, L.M.; MIRONOV, A.A.

Combining the preparation of raw stocks for catalytic cracking with the production of neutralized black sludge. Trudy Bash NIINP no.5:88-93 '62. (MIRA 17:10)

APPROVED FOR RELEASE: 06/08/2000 CIA-RDP86-00513R000204910009-6"

"APPROVED FOR RELEASE: 06/08/2000 CIA-RDP86-00513R000204910009-6

MASAGUTOV, R.M.; BERG, G.A.; KOLBINA, L.I.; KHARITSKAYA, R.Z.

Economic effectiveness of certain variates of the preparation of raw stocks for catalytic cracking. Trudy Bash NIINP no.5:94-98 '62. (MIRA 17:10)

APPROVED FOR RELEASE: 06/08/2000 CIA-RDP86-00513R000204910009-6"

"APPROVED FOR RELEASE: 06/08/2000 CIA-RDP86-00513R000204910009-6

MASAGUTOV, R.M.; DUBININA, G.G.; BERG, G.A.; SOKOLOVA, V.I.

Effect of various factors on the stability of the quality of nickel catalysts on Kiezelguhr. Nefteper. i neftekhim. no.5: 24-27 '65. (MIRA 18:7)

1. Bashkirskiy nauchno-issledovatel'skiy Institut po pererabotke nefti, Ufa.

APPROVED FOR RELEASE: 06/08/2000 CIA-RDP86-00513R000204910009-6"

"APPROVED FOR RELEASE: 06/08/2000 CIA-RDP86-00513R000204910009-6

SAFAYEV, A.S.; SULTANOV, A.S.; MASAGUTOV, R.M.; MIRUSMANOVA, M.; BIRO, G.A.

Catalyst for the hydrocracking of sulfurous petroleum products. Dokl. AN Uz. SSR 21 no. 11:50-52 '64. (MIRA 18:12)

1. Institut ispol'zovaniya topliva pri Gosudarstvennom komitete khimicheskoy i neftyanoy promyshlennosti pri Gosplane SSSR. Submitted March 20, 1964.

APPROVED FOR RELEASE: 06/08/2000 CIA-RDP86-00513R000204910009-6"

"APPROVED FOR RELEASE: 06/08/2000 CIA-RDP86-00513R000204910009-6

CZECHOSLOVAKIA

BEHG, H.; GOLLMICK, F. A.

Institute for Microbiology and Experimental Therapy, German Academy of Sciences (Institut fur Mikrobiologie und experimentelle Therapie, Deutsche Akademie der Wissenschaften), Jena (for both)

Prague, Collection of Czechoslovak Chemical Communications, No 12, Dec 1965, pp 4192/4201.

"Photo-polarography. Part 16: On the determination of half-wave potentials of excited molecules."

APPROVED FOR RELEASE: 06/08/2000 CIA-RDP86-00513R000204910009-6"

"APPROVED FOR RELEASE: 06/08/2000 CIA-RDP86-00513R000204910009-6

ACC NR: AP6004728 SOURCE CODE: GE/0065/65/228/03-/0206/0238

AUTHOR: Flemming, Joachim (Graduate chemist); Berg, Hermann (Doctor)

ORG: Institute for Microbiology and Experimental Therapy, German Academy of Sciences, Jena (Institut fur Mikrobiologie und experimentelle Therapie der Deutschen Akademie der Wissenschaften)

TITLE: Polarographic and spectroscopic studies on quinone equilibria. Part 6: Kinetics of the hydrolytic removal of amino substituents

SOURCE: Zeitschrift fur physikalische Chemie, v. 228, no. 3-4, 1965, 206-238

TOPIC TAGS: polarographic analysis, spectrophotometric analysis, chemical reaction kinetics, reaction mechanism, organic nitrogen compound, substituent, quinone, hydrolysis, chemical equilibrium

ABSTRACT: The polarographic behavior of 21 (β-hydroxyalkylamino)-benzoquinones-(1,4), some of which are capable of maintaining an equilibrium between the corresponding quinole and quinone forms, was investigated under various values of pH. Spectrophotometric studies were also undertaken to further elucidate the reaction mechanisms involved. The effects of pH, temperature, and substituent composition on the hydrolytic cleavage of the compounds were determined and discussed. Orig. art. has: 19 figures, 25 formulas, and 11 tables. [JPRS]

SUB CODE: 07 / SUBM DATE: 04Apr64 / ORIG REF: 011 / OTH REF: 012

Card 1/1 HW

APPROVED FOR RELEASE: 06/08/2000 CIA-RDP86-00513R000204910009-6"

"APPROVED FOR RELEASE: 06/08/2000 CIA-RDP86-00513R000204910009-6

BERG, I.

"Organizing the application of safety measures at a metallurgical plant" by P.D.Ermakov, A.E.Kolegov, A.A.Malykh. Reviewed by I.Berg. Bezop. truda v prom. 2 no.7:39 Jl '58. (MIRA 11:9)

1. Starshiy inzhener po tekhnike bezopasnosti upravleniya metallurgicheskoy promyshlennosti Chelyabinskogo sovnarkhoza.
(Bibliography--Industrial safety)
(Ermakov, P.D.)
(Kolegov, A.E.)
(Malykh, A.A.)

APPROVED FOR RELEASE: 06/08/2000 CIA-RDP86-00513R000204910009-6"

"APPROVED FOR RELEASE: 06/08/2000 CIA-RDP86-00513R000204910009-6

BERG, I.A., inzhener; RAYLO, P.I., redaktor; AVRUTSKAYA, R.F., redaktor; BEKKER, O.G., tekhnicheskiy redaktor

[Safety engineering in the metallurgy of ferrous metals] Tekhnika bezopasnosti v chernoi metallurgii. Moskva, Gos. nauchno-tekhn. izd-vo po chernoi i tsvetnoi metallurgii, 1954. 205 p. (MLRA 7:9)
(Metallurgy--Safety measures)

APPROVED FOR RELEASE: 06/08/2000 CIA-RDP86-00513R000204910009-6"

"APPROVED FOR RELEASE: 06/08/2000 CIA-RDP86-00513R000204910009-6

ZLOCHEVSKIY, I.I., glavnyy domenshchik; BERG, I.A.

Improving working conditions in blast-furnace plants. Bezop.truda v prom. 3 no.1:15-16 Ja '59. (MIRA 12:3)

1. Upravleniye metallurgicheskoy promyshlennosti Chelyabinskogo sovnarkhoza (for Zlochevskiy). 2. Starshiy inzhener po tekhnike bezopasnosti upravleniya metallurgicheskoy promyshlennosti chelyabinskogo sovnarkhoza (for Berg).
(Chelyabinsk--Blast furnaces)

APPROVED FOR RELEASE: 06/08/2000 CIA-RDP86-00513R000204910009-6"

"APPROVED FOR RELEASE: 06/08/2000 CIA-RDP86-00513R000204910009-6

BERG, I.A., insh.

Improving working conditions of Chelyabinsk steel workers. Bezop. truda v prom. 3 no.7:15-17 Jl '59. (MIRA 12:11)
(Cheylabinsk--Steel industry--Safety measures)

APPROVED FOR RELEASE: 06/08/2000 CIA-RDP86-00513R000204910009-6"

"APPROVED FOR RELEASE: 06/08/2000 CIA-RDP86-00513R000204910009-6

KOTOV, G.; POPRAVKO, L. (Zhitomir); BOYKO, P. (Kiyev); BERG, I. (Simferopol')

They are from the Ukraine. Pozh.delo 9 no.11:26-27 N '63.(MIRA 17:1)

1. Zamestitel' nachal'nika uchebnogo otdela Khar'kovskogo pozharno-tekhnicheskogo uchilishcha (for Kotov).

APPROVED FOR RELEASE: 06/08/2000 CIA-RDP86-00513R000204910009-6"

"APPROVED FOR RELEASE: 06/08/2000 CIA-RDP86-00513R000204910009-6

BERG, Iosif Abramovich; MIRONOV, P.M., red.; BRUSHTEYN, A.I., red. izd-va; GINZBURG, R.Ya., tekhn. red.

[Safety measures and industrial sanitation in ferrous metallurgy] Tekhnika bezopasnosti i promyshlennaia sanitariia v chernoi metallurgii. Moskva, Metallurgizdat, 1963. 295 p. (MIRA 17:2)

APPROVED FOR RELEASE: 06/08/2000 CIA-RDP86-00513R000204910009-6"

"APPROVED FOR RELEASE: 06/08/2000 CIA-RDP86-00513R000204910009-6

CA

Micromethods for the determination of gutta in Evonymus. A. N. Shaternikova and I. V. Berg. *Sovet. Botan.* **15**, 161-3(1947); *Chem. Zentr.* **1947**, II, 757.—Kudasheva (cf. *C.A.* **35**, 6832[4]) has recommended staining with an aq. tincture of I. In this case the blue-black coloration of the starch grains interferes. The starch coloration can be removed before the yellow color of the gutta disappears by extg. for 1 month with alc. A better procedure is heating with 2.5-3% H_2SO_4 for 3-4 min. at 50-90°, which converts the starch into monosaccharide, so that only the gutta is stained with the I. M. G. M.

APPROVED FOR RELEASE: 06/08/2000 CIA-RDP86-00513R000204910009-6"

"APPROVED FOR RELEASE: 06/08/2000 CIA-RDP86-00513R000204910009-6

L 16419-66 EWT(d)/EPF(n)-2/EWP(1) IJP(c) BB/GG

ACC NR: AP6006387 SOURCE CODE: UR/0413/66/000/002/0118/0118

INVENTOR: Staros, F. G.; Berg, I. V.; Kreynin, S. I.; Lashevskiy, R. A.; Maksimov, M. N.; Tamarchenko, N. G. Shenderovich, Yu. I.; Yevstegneyev, M. I.; Bekker, Ya. M.

ORG: none

TITLE: Storage device. Class 42, No. 178178

SOURCE: Izobreteniya, promyshlennyye obraztsy, tovarnyye znaki, no. 2, 1966, 118

TOPIC TAGS: storage device, computer circuit, microelectronic device

ABSTRACT: The proposed storage device (see Fig. 1) utilizes multiple-aperture ferrite plates and contains number plates and a decoder plate. To facilitate manufacture and microminiaturization of the device, the number conductor, which is printed on the number plate, is connected to a conductor passing through the

Card 1/2 UDC: 681.142

APPROVED FOR RELEASE: 06/08/2000 CIA-RDP86-00513R000204910009-6"

"APPROVED FOR RELEASE: 06/08/2000 CIA-RDP86-00513R000204910009-6

L 16419-66
ACC NR: AP6006387

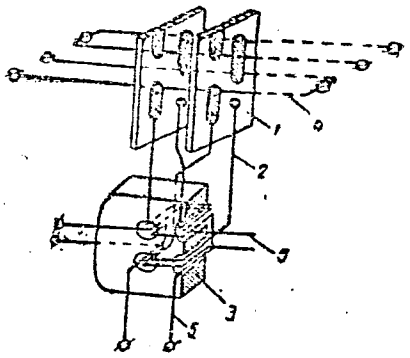

Fig. 1. Storage device

1 - Number plate; 2 - output winding; 3 - decoder plate; 4 - digit winding; 5 - decoder crossbar winding.

two apertures of the decoder; the number plates together with the decoder plate are mounted in a holder which is filled with a thermosetting compound. Orig. art. has: 1 figure.

[DW]

SUB CODE: 09/ SUBM DATE: 25Jan65/ ATD PRESS: 4205

APPROVED FOR RELEASE: 06/08/2000 CIA-RDP86-00513R000204910009-6"

"APPROVED FOR RELEASE: 06/08/2000 CIA-RDP86-00513R000204910009-6

1. BERG, I. Ye., Eng.

2. USSR (600)

4. Soap

7. Removing soap from cold presses by machinery in soap factories, Masl. zhir. prom., 17, No. 9, 1952.

9. Monthly List of Russian Accessions, Library of Congress, February 1953. Unclassified.

APPROVED FOR RELEASE: 06/08/2000 CIA-RDP86-00513R000204910009-6"

"APPROVED FOR RELEASE: 06/08/2000 CIA-RDP86-00513R000204910009-6

BERG, I.Ye., Inzhener.

Automatic rotating sampler of bulk materials. Masl.-zhir.prom. 17 no.8:20-21 Ag '52. (MLRA 10:9)

1. Vsesoyuznyy nauchno-issledovatel'skiy institut zhirov.
(Sampling)

APPROVED FOR RELEASE: 06/08/2000 CIA-RDP86-00513R000204910009-6"

"APPROVED FOR RELEASE: 06/08/2000 CIA-RDP86-00513R000204910009-6

BERG, L.

Sudokhodstvo na Aral'skom more. [Navigation on the Aral sea]. (Bol. sov. ents., 1926, v. 3, col. 239). DLC: AE55.B6

SO: Soviet Transportation and Communication, A Bibliography, Library of Congress, Reference Department, Washington, 1952, Unclassified.

APPROVED FOR RELEASE: 06/08/2000 CIA-RDP86-00513R000204910009-6"

"APPROVED FOR RELEASE: 06/08/2000 CIA-RDP86-00513R000204910009-6

BERG, L.

Names, Geographical - Bessarabia

"Toponymy of Bessarabia and its evidence in regards to the process of peopling the territory." M. V. Sergievskiy Reviewed by L. Berg
Izv. Vses. geog. ob-va 79 no. 3, 1947

9. Monthly List of Russian Accessions, Library of Congress, May 1953. Unclassified.

APPROVED FOR RELEASE: 06/08/2000 CIA-RDP86-00513R000204910009-6"

"APPROVED FOR RELEASE: 06/08/2000 CIA-RDP86-00513R000204910009-6

BERG, L.

PA 10/49T23

USSR/Agronomy
Soil Studies

Jul/Aug 48

"Soil Map for European USSR," L. Berg, ¼ p

"Iz v-s Geograf Obshch" Vol LXXX, No 4

Map shows 84 soil varieties. Kaliningrad Oblast and returned oblasts of western Ukraine are depicted for first time. Published by Soil Inst, Acad Sci USSR, 1947, scale 1:2,500,000, 4 sheets.

[redacted] 10/49T23

APPROVED FOR RELEASE: 06/08/2000 CIA-RDP86-00513R000204910009-6"

"APPROVED FOR RELEASE: 06/08/2000 CIA-RDP86-00513R000204910009-6

BERG, L.A.; MOCHALOV, K.N.; KURENKOVA, P.A.; ANOSHINA, N.P.

Thermographic investigations of bromoplatinic acid. Izv.Kazan. fil.AN SSSR.Ser.khim.nauk no.4:127-132 '57. (MIRA 12:5)
(Bromoplatinic acid)
(Thermochemistry)

APPROVED FOR RELEASE: 06/08/2000 CIA-RDP86-00513R000204910009-6"

"APPROVED FOR RELEASE: 06/08/2000 CIA-RDP86-00513R000204910009-6

1ST AND 2ND ORDERS

PROCESSES AND PROPERTIES INDEX

6

Lithium chlorate. L. Berg. *J. Russ. Phys.-Chem. Soc.* 61, 1801-5(1929); cf. *C. A.* 21, 214; 23, 4031.—The system $LiClO_3$-H_2O was studied, and the hydrate $(LiClO_3)_2 \cdot H_2O$ was found, in addn. to other hydrates previously described. $(LiClO_3)_2 \cdot H_2O$ was obtained as large crystals, analysis of which gave results very close to the theoretical. Existence of this hydrate was denied by other investigators, and a series of expts. was conducted by B. to prove its presence by means of thermic analysis. R. S.

ASM-SLA METALLURGICAL LITERATURE CLASSIFICATION

APPROVED FOR RELEASE: 06/08/2000 CIA-RDP86-00513R000204910009-6"

"APPROVED FOR RELEASE: 06/08/2000 CIA-RDP86-00513R000204910009-6

PROCESSES AND PROPERTIES INDEX

2

Solubility isotherm of the reciprocal system $FeSO_4$-NaCl at 25°. L. Petr. *Trans. VI Mendeleev Congr. Theoret. Applied Chem.* 1932 2, Pt. 1, 619-20(1935).—A considerable similarity to the system $MgSO_4$-NaCl was found. Iron astrakanite in its optical values and crystal form is very like Mg astrakanite; it forms much more easily than the latter. A very pure prepn. of $FeCl_2$-$4H_2O$ can be obtained by filtering, crystg. and drying in an atm. of ether vapor. E. E. Stefanowsky

ASB-SLA METALLURGICAL LITERATURE CLASSIFICATION

APPROVED FOR RELEASE: 06/08/2000 CIA-RDP86-00513R000204910009-6"

"APPROVED FOR RELEASE: 06/08/2000 CIA-RDP86-00513R000204910009-6

Preparation of pure ferrous chloride not containing ferric chloride. L. G. Berg. *Zavodskaya Lab.* 5, 235-6 (1936).—Fe and HCl are added to hot satd. aq. $FeCl_2$ (contg. $FeCl_3$), the soln. is filtered into a receiver contg. 2-3 ml. of H_2O and the filtrate is cooled, when pure $FeCl_2 \cdot 4H_2O$ crystallizes. The soln. is filtered in a CO_2 or H_2O atm. and the crystals are dried in vacuum.

B. C. A.

ASM-SLA METALLURGICAL LITERATURE CLASSIFICATION

APPROVED FOR RELEASE: 06/08/2000 CIA-RDP86-00513R000204910009-6"

"APPROVED FOR RELEASE: 06/08/2000 CIA-RDP86-00513R000204910009-6

1ST AND 2ND ORDERS

PROCESSES AND PROPERTIES INDEX

3RD AND 4TH ORDERS

Cu

2

Physicochemical principles of purification of potash and means of its rational organization. L. Berg and A. Nikolaev. *Bull. acad. sci. U. R. S. S., Classe sci. math. nat., Ser. chim.* **1937**, 847–56 (in English 856).– In the system K_2CO_3-KCl-H_2O, in contact with crystals of the 2 salts, the following solubilities were found (the 1st no. represents temp., the 2nd and 3rd nos. represent solv. of K_2CO_3 and KCl, resp., in g. per 100 cc. H_2O): 20, 109.7, 1.7; 30, 111.7, 2.2; 50, 119.8, 3.1; 70, 133.7, 4.8; 84, 140.8, 6.45; 100, 150.0, 6.5; 124.5, 180.7, 7.7. A method for purifying K_2CO_3 on a large scale is described in detail. The method consists in dissolving the crude potash in a mother liquor and then cooling the soln. to 20°. Presence of Cl^-, SO_4^{--} and SiO_2 in the crude potash does not interfere with the purification process. S. L. M.

ASM-SLA METALLURGICAL LITERATURE CLASSIFICATION

APPROVED FOR RELEASE: 06/08/2000 CIA-RDP86-00513R000204910009-6"

"APPROVED FOR RELEASE: 06/08/2000 CIA-RDP86-00513R000204910009-6

PROCESSES AND PROPERTIES INDEX

BC

A-1

Permutite and its properties. N. S. Kurnakov, L. G. Rzeg, and V. N. Svesoshnikova (Bull. Acad. Sci. U.R.S.S., 1937, Sér. Chim., 1381—1396).—The influence of the conditions of prep. on the properties of the gel formed by mixing slightly alkaline solutions of Na aluminate and silicate has been determined. Increase of alkali concn. or rise of temp. leads to the pptn. of $Na_2O,Al_2O_3,2SiO_2,2H_2O$, which can be obtained in macrocryst. form in strongly alkaline solutions (>20%) at 80—90°. The X-ray diagrams of the crystals are similar to those of kaolin and of the product obtained by treating permutite with strong alkali. The amount of SiO_2 in the ppt. increases as the alkalinity of the Na aluminate solution decreases. The base-exchange properties of the ppts. have been investigated. E. S. H.

ASM-SLA METALLURGICAL LITERATURE CLASSIFICATION

APPROVED FOR RELEASE: 06/08/2000 CIA-RDP86-00513R000204910009-6"

"APPROVED FOR RELEASE: 06/08/2000 CIA-RDP86-00513R000204910009-6

BC

25° solubility isotherm of the system K_2O-P_2O_5-H_2O. L. G. BERG (Kalii, 1937, No. 1, 28—36).—Slowness of crystallisation and the formation of metastable phases introduce difficulties in the determination of the isotherm. The existence of a section characterised by anhyd. K_3PO_4 as the solid phase (D'Ans *et al.*, A., 1910, ii, 1050; 1914, ii, 848) is not confirmed. Mono-, di-, and tri-substituted K phosphates can be crystallised satisfactorily. K_3PO_4 crystallises as the tri- or hepta-hydrate. The octahydrate described by Janecke (A., 1927, 731) is not indicated but the existence of the double salt $KH_2PO_4.2K_2HPO_4.H_2O$ is confirmed. D. G.

ASM SLA METALLURGICAL LITERATURE CLASSIFICATION

APPROVED FOR RELEASE: 06/08/2000 CIA-RDP86-00513R000204910009-6"

"APPROVED FOR RELEASE: 06/08/2000 CIA-RDP86-00513R000204910009-6

BERG, L. G.

"Preparation of pure $FeCl_2$," 1937

"Purification of K_2CO_3 (with A. V. Nikolayev), 1937

From Izvestia Akad. Nauk, Chem. Ser., 1937, No. 4.

APPROVED FOR RELEASE: 06/08/2000 CIA-RDP86-00513R000204910009-6"

"APPROVED FOR RELEASE: 06/08/2000 CIA-RDP86-00513R000204910009-6

1ST AND 2ND ORDERS

3RD AND 4TH ORDERS

PROCESSES AND PROPERTIES INDEX

2

Solubility isotherm of the ternary system K_2O–P_2O_5–H_2O at 25°. L. G. Berg. *Bull. acad. sci. U. R. S. S., Classe sci. math. nat., Sér. chim.* 1938, No. 1, 147-60 (in English 160).—See *C. A.* 31, 5356[4]. M. W. B.

ASM-SLA METALLURGICAL LITERATURE CLASSIFICATION

APPROVED FOR RELEASE: 06/08/2000 CIA-RDP86-00513R000204910009-6"

"APPROVED FOR RELEASE: 06/08/2000 CIA-RDP86-00513R000204910009-6

1ST AND 2ND ORDERS

PROCESSES AND PROPERTIES INDEX

BC

A-1

Solubility isotherm of the ternary system K_2O-P_2O_5-H_2O at 50°. L. G. Bruno (Bull. Acad. Sci. U.R.S.S., 1938, Sér. Chim., 161—166).—The isotherm consists of ten curves, corresponding with the solid phases: $KOH.H_2O$, $KOH.2H_2O$, $K_3PO_4.3H_2O$, $K_3PO_4.7H_2O$, K_2HPO_4, $K_2HPO_4.3H_2O$, $K_2HPO_4.KH_2PO_4.3H_2O$, KH_2PO_4, $KH_2(PO_4)_2$, and $2H_3PO_4.H_2O$. Microscopic, chemical, and crystallographic methods have been used in the examination of these phases. No evidence of K_3PO_4 or $K_3PO_4.8H_2O$ has been obtained. The existence of $2K_2HPO_4.KH_2PO_4.H_2O$ and $3K_2HPO_4.2H_2O$ is confirmed and that of $5K_2HPO_4.KH_2PO_4.2(?)H_2O$, $3K_2HPO_4.KH_2PO_4.3H_2O$, and $K_2HPO_4.KH_2PO_4.2H_2O$ reported. E. S. H.

ASM-SLA METALLURGICAL LITERATURE CLASSIFICATION

APPROVED FOR RELEASE: 06/08/2000 CIA-RDP86-00513R000204910009-6"

"APPROVED FOR RELEASE: 06/08/2000 CIA-RDP86-00513R000204910009-6

1ST AND 2ND ORDERS

PROCESSES AND PROPERTIES INDEX

Heating curves of mixtures and some analytical precipitates. L. G. Berg and A. V. Nikolaev. *Trudy Vsesoyuz. Konferentsii Anal. Khim., Akad. Nauk S. S. S. R.* 1, 201-16(1939); *Khim. Referat. Zhur.* 1940, No. 4, 47; cf. C. A. 33, 3513[9].—Methods of obtaining heating curves and of identification of isomers are described briefly. Cpt complex compds. and maleic and fumaric acids are given as examples. The heating curves of $Fe(OH)_3$, $Cr(OH)_3$, $MgNH_4PO_4.6H_2O$ and $(NH_4)_2PtCl_6$ are presented in connection with the temp. of heating of the analytical ppts. The heating curves of $MgSO_4$, $MnSO_4$, $CaSO_4$, $ZnSO_4$ and $Fe_2(SO_4)_3$ indicate accurately the temp. necessary for obtaining pure anhyd. salts. The last water of most sulfates of bivalent metals is removed at wide intervals of temp. The method of heating curves can be used for phase analysis of salts in mixts. W. R. Henn

ASM-SLA METALLURGICAL LITERATURE CLASSIFICATION

APPROVED FOR RELEASE: 06/08/2000 CIA-RDP86-00513R000204910009-6"

"APPROVED FOR RELEASE: 06/08/2000 CIA-RDP86-00513R000204910009-6

PROCESSES AND PROPERTIES INDEX

Application of the heating curve method for the investigation of character of natural salts and their mixtures. N. S. Kurnakov, L. G. Berg and I. N. Lepeshkov. *J. Applied Chem.* (U. S. S. R.) 12, 525-35(in French, 35)(1930). —The time-temp. curves obtained by the usual method, by heating salts, such as NaCl, KCl, K_2SO_4, Na_2SO_4, and $MgSO_4$, with various quantities of H_2O of crystn., astrakanite, glaserite, etc., permitted characterizing the salts according to the heat effect, corresponding to their dehydration, transformation, decompn., etc. Anhyd. salts (NaCl or KCl) cannot be detd. in the mixt., since they have no transformation points and the m. p. is not characteristic evidence for the mixt. The method permitted detg. the presence of solid phase in natural, mineral salts and detg. the qual. compn. of the mixt., while the magnitude of the thermal effect detd. approx. the quant. compn. of the mixt. Polyhalite, glauberite, kieserite, astrakanite, gypsum, carnallite, epsomite and theuardite were detd. in the mixt., even in small amts., because of the characteristic discontinuity on the heating curves, which corresponded to the heat effect of their dehydration and transformation. The presence of NaCl and KCl did not interfere with the detn. of other salts in minerals. The method was applied to qual. analysis of mineral compn. or the compn. of their mixts. and gave good results.

A. A. Podgorny

ASM SLA METALLURGICAL LITERATURE CLASSIFICATION

APPROVED FOR RELEASE: 06/08/2000 CIA-RDP86-00513R000204910009-6"

"APPROVED FOR RELEASE: 06/08/2000 CIA-RDP86-00513R000204910009-6

1ST AND 2ND ORDERS — PROCESSES AND PROPERTIES INDEX — 3RD AND 4TH ORDERS

BC

A-1

(A) **Double salts of mono- and di-potassium phosphate.** L. G. Berg and G. B. Bokl. (B) **Heating curves of potassium phosphates.** L. G. Berg (*Bull. Acad. Sci. U.R.S.S., Cl. Sci. Chim.*, 1940, 877—885, 887—894).—(A) The following double salts are formed in the system K_2O–P_2O_5–H_2O at 25° and 50°: $3K_2HPO_4.KH_2PO_4.2H_2O$, $3K_2HPO_4.KH_2PO_4.2H_2O$, $2K_2HPO_4.KH_2PO_4.H_2O$, $K_2HPO_4.KH_2PO_4.2H_2O$, $K_2HPO_4.KH_2PO_4.3H_2O$. Solubility and crystallographic data are recorded for these salts.

(B) Heating curves are recorded for the salts $K_3PO_4.3H_2O$, K_2HPO_4, $K_2HPO_4.3H_2O$, $K_2HPO_4.K_4P_2O_7$, KPO_3, KH_2PO_4, H_3PO_4, $H_3PO_4.0.5H_2O$, and the above double salts. R. T.

ASM-SLA METALLURGICAL LITERATURE CLASSIFICATION

APPROVED FOR RELEASE: 06/08/2000 CIA-RDP86-00513R000204910009-6"

"APPROVED FOR RELEASE: 06/08/2000 CIA-RDP86-00513R000204910009-6

PROCESSES AND PROPERTIES INDEX

Cu

2

No. 6

Heating curves of bivalent metal sulfates. L. G. Berg and A. V. Nikolaev. *Bull. acad. sci. U. R. S. S., Class sci. chim.* 1940, 865-75(in English, 876).—Dehydration of bivalent metal sulfates was studied by the method of heating curves (thermograms) with the application of a differential method and automatic heating. Various effects are interpreted and compared with other data. The heating curves for the following sulfates are presented: $CuSO_4.5H_2O$; $CaSO_4.2H_2O$; $NiSO_4.7H_2O$; $CoSO_4.7H_2O$; $FeSO_4.7H_2O$; $MgSO_4.7H_2O$; $ZnSO_4.7H_2O$; $MnSO_4.5H_2O$ and $CdSO_4.8/3H_2O$. B. L. Rodzianko

ASM-SLA METALLURGICAL LITERATURE CLASSIFICATION

APPROVED FOR RELEASE: 06/08/2000 CIA-RDP86-00513R000204910009-6"

"APPROVED FOR RELEASE: 06/08/2000 CIA-RDP86-00513R000204910009-6

1ST AND 2ND ORDERS

PROCESSES AND PROPERTIES INDEX

6

Alumino- and chromosilicic acids. L. G. Berg and V. N. Sveshnikova. *Ann. secteur anal. phys.-chim. Inst. chim. gén.* (U. R. S. S.) 13, 355-61(1940).—The electrotitration curves of the natural and artificial aluminosilicates suggest that the free aluminosilicic acids are extremely unstable at pH less than 4.5. Chromosilicic acids are more stable since they are not decomposed at pH 2.
B. C. P. A.

ASM-SLA METALLURGICAL LITERATURE CLASSIFICATION

APPROVED FOR RELEASE: 06/08/2000 CIA-RDP86-00513R000204910009-6"

"APPROVED FOR RELEASE: 06/08/2000 CIA-RDP86-00513R000204910009-6

BERG, L. G.

"Heating curves of K phosphates," 1941.

"Heating of curves of Mixtures," with A. V. Nikolayev), 1941.

"Alumino and chromo-silicic acids (with V. N. SVESHNIKOVA), 1941, 1946.

From Izvestia Akad. Nauk, Chem. Ser., 1946, No. 1

APPROVED FOR RELEASE: 06/08/2000 CIA-RDP86-00513R000204910009-6"

"APPROVED FOR RELEASE: 06/08/2000 CIA-RDP86-00513R000204910009-6

CA

PROCESSES AND PROPERTIES INDEX

2

Thermographic method for determining solid phases in multiple points of polycomponent systems. L. G. Berg and O. K. Yanat'eva (Rostov on Don State Univ.). *Ann. sector anal. phys. chim., Inst. chim. gén.* (U.R.S.S.) 14, 173-91(1941).—The present work was an attempt to det. the solid phases in a five-component system comprising K, Na, and Mg chlorides and sulfates. Thermal curves were obtained for glaserite, schoenite, kainite, astrakanite, carnallite, bischofite, and their combinations. In addn. curves for some of the hydrates were obtained. The results are tabulated and the curves are reproduced. The method permitted detg. the presence of any one of the salts as an admixt. with other salts. Its sensitivity permitted detection of approx. 5 mol. % of an admixt. Differentiation of various hydrates of the same salt present simultaneously is more difficult. M. Hosch

ASM-SLA METALLURGICAL LITERATURE CLASSIFICATION

APPROVED FOR RELEASE: 06/08/2000 CIA-RDP86-00513R000204910009-6"

"APPROVED FOR RELEASE: 06/08/2000 CIA-RDP86-00513R000204910009-6

1ST AND 2ND ORDERS

PROCESSES AND PROPERTIES INDEX

BC

Nos. 1-2

Determination of heats of dehydration and dissociation by the use of heating curves. I. G. Berg and V. J. Anosov (*J. Gen. Chem. Russ.*, 1947, 18/31-41).—The principle of the method consists in determining the heating curve of a mixture of the substance to be examined and a standard of known thermal properties dissociating at a considerably different temp. In this way, many errors are eliminated (*e.g.*, due to position of thermocouple, rate of heating, etc.). Consideration of curves constructed from the data obtained enables the ratio between the two heating effects to be established, and from this the numerical val. of the unknown effect can be calc. Results are shown for $Al(OH)_3$, $Ca(OH)_2$, $CaSO_4.xH_2O$, etc. Although special accuracy is not claimed, the method is very useful for determining heats of reaction where other methods are unsuitable, *e.g.*, in the dehydration of inorg. substances. J. I. W.

ASM-SLA METALLURGICAL LITERATURE CLASSIFICATION

APPROVED FOR RELEASE: 06/08/2000 CIA-RDP86-00513R000204910009-6"

"APPROVED FOR RELEASE: 06/08/2000 CIA-RDP86-00513R000204910009-6

BERG, L. G.

"Determination of Heats of Dehydration," (with V. Yu. Anosov), 1943.

From Izvestia Akad. Nauk, Chem. Ser., 1946, No. 1.

APPROVED FOR RELEASE: 06/08/2000 CIA-RDP86-00513R000204910009-6"

"APPROVED FOR RELEASE: 06/08/2000 CIA-RDP86-00513R000204910009-6

Ca

No. 1

2

Influence of salt admixtures upon dissociation of dolomite. L. O. Berg. *Compt. rend. acad. sci. U. R. S. S.* 28/34-7(1962)(in English).—Studies made on dolomites of various origins show that a superheating wave in the thermograms can easily be made to give on the heating curve a picture of second type dissocn. In fact an addn. of about 1% or even less (0.01%) of NaCl affects the heating curve of dolomite by completely suppressing the heating wave and lowering the dissocn. point. Similar effect upon the dissocn. of dolomite is exhibited also by nitrates, carbonates, acetates of Na, K and other salts of alk. metals. The expts. show that the addn. of NaCl to the sample of dolomite actually changes the ratio of the areas in the thermogram within wide limits.

V. B. de Marchi

ASM-SLA METALLURGICAL LITERATURE CLASSIFICATION

APPROVED FOR RELEASE: 06/08/2000 CIA-RDP86-00513R000204910009-6"

"APPROVED FOR RELEASE: 06/08/2000 CIA-RDP86-00513R000204910009-6

1ST AND 2ND CODES

PROCESSES AND PROPERTIES INDEX

3RD AND 4TH CODES

M

24

BERG, L. G., A. V. NIKOLAEV, and E. YA. RODE. **Termografiya: Krivye Nagrevaniya i Okhlazhdeniya.** (**Thermography: Heating and Cooling Curves.**) 19 × 26 cm. Pp. 175, with 130 illustrations. 1944. Moscow and Leningrad: Izdatel'stvo Akademii Nauk S.S.S.R. (Roubles 11.)

CODED ELEMENTS

CODED MATERIALS INDEX

ASM-SLA METALLURGICAL LITERATURE CLASSIFICATION

APPROVED FOR RELEASE: 06/08/2000 CIA-RDP86-00513R000204910009-6"

"APPROVED FOR RELEASE: 06/08/2000 CIA-RDP86-00513R000204910009-6

BERG, L. G., Nikolayev, A. V., and Rode, E. Ya.
Termografiya.
Moscow, 1944.
175pp.

The book deals with theory and methods, thermographic research, and of general and inorganic chemistry; published by the Institute Academy of Sciences, USSR.

APPROVED FOR RELEASE: 06/08/2000 CIA-RDP86-00513R000204910009-6"

"APPROVED FOR RELEASE: 06/08/2000 CIA-RDP86-00513R000204910009-6

BERG, L. G.

"Dissociation of Dolomite," 1944.

From Izvestia Akad. Nauk, Chem. Ser., 1946, No. 1.

APPROVED FOR RELEASE: 06/08/2000 CIA-RDP86-00513R000204910009-6"

"APPROVED FOR RELEASE: 06/08/2000 CIA-RDP86-00513R000204910009-6

PROCESSES AND PROPERTIES INDEX

Ca

20

Waterproofing carbonate soils by formation of a film of metallic hydroxides on the surface. L. G. Berg and A. N. Nikolaev. *Zashchitnye Plenki na Solyakh. Akad. Nauk S.S.S.R.* 1944, 12-16.—Carbonate soils were treated with solns. of Fe or Al salts (preferably chlorides or sulfates). When $CaCO_3$ is in excess there is a rapid deposition of $Fe(OH)_3$ or $Al(OH)_3$; when excess $FeCl_3$ was used (i.e., an acid condition existed), colloidal hydrated Fe oxide was formed, which coagulated only very slowly. Thus, in practical applications where large excess of the carbonate is to be expected, rapid film formation is assured.

G. M. Kosolapoff

ASM SLA METALLURGICAL LITERATURE CLASSIFICATION

APPROVED FOR RELEASE: 06/08/2000 CIA-RDP86-00513R000204910009-6"

"APPROVED FOR RELEASE: 06/08/2000 CIA-RDP86-00513R000204910009-6

1ST AND 2ND ORDERS

PROCESSES AND PROPERTIES INDEX

Ca

20

Waterproofing soils by the formation of a surface film by means of slaked lime or its mixture with sand. L. G. Berg and A. V. Nikolaev. *Zashchitnye Plenki na Solyakh. Akad. Nauk S.S.S.R.* 1944, 63-9.—The use of $Ca(OH)_2$ alone or admixed with sand permits very satisfactory waterproofing of soil structures by the treatment with salts of the trivalent metals. Possible applications of this cheap method are discussed. G. M. Kosolapoff

ASM-SLA METALLURGICAL LITERATURE CLASSIFICATION

APPROVED FOR RELEASE: 06/08/2000 CIA-RDP86-00513R000204910009-6"

"APPROVED FOR RELEASE: 06/08/2000 CIA-RDP86-00513R000204910009-6

1ST AND 2ND ORDERS

PROCESSES AND PROPERTIES INDEX

ca

20

Field trials of the soil-waterproofing method of the Institute of General and Inorganic Chemistry of the Academy of Science, U.S.S.R. L. G. Berg, A. V. Nikolaev, V. N. Sveshnikova, and E. B. Shteruina. *Zachchitnye Plenki na Selyakh. Akad. Nauk S.S.S.R.* 1946, 70-4.—The lime-Fe sulfate method was successfully applied in the field for waterproofing water reservoirs. The best results are achieved by the use of relatively concd. solns.

G. M. Kosolapoff

COMMON ELEMENTS

COMMON VARIABLES INDEX

ASM-SLA METALLURGICAL LITERATURE CLASSIFICATION

APPROVED FOR RELEASE: 06/08/2000 CIA-RDP86-00513R000204910009-6"

"APPROVED FOR RELEASE: 06/08/2000 CIA-RDP86-00513R000204910009-6

BERG, L. G.

"Waterproofing of Soils," (with A. V. NIkolayev, V. N. SVESHNIKOVA & E. B. SHTERNINA), 1945.

From Izvestia Akad. Nauk, Chem. Ser., 1946, No. 1.

APPROVED FOR RELEASE: 06/08/2000 CIA-RDP86-00513R000204910009-6"

"APPROVED FOR RELEASE: 06/08/2000 CIA-RDP86-00513R000204910009-6

1ST AND 2ND ORDERS

PROCESSES AND PROPERTIES INDEX

CA

20

The products of dehydration of plaster. L. G. Berg and V. N. Sveshnikova. *Akad. Nauk S.S.S.R., Referaty, Otdel. Khim. Nauk* 1945, 13.—α-$CaSO_4$ $^1/_2H_2O$ forms under pressure above 100° or by boiling $CaSO_4$ in soln. in water; the β modification is obtained by dehydration of $CaSO_4.2H_2O$ between room temp. and 100°. Refractive indexes n_g, n_p: α 1.577, 1.559; β 1.556, 1.550. The α form loses water at 200-210°, β at 170-180°; in the thermogram of the latter, the exothermal effect of transition from sol. to insol. anhydrite is clearly seen. The rate of hydration of α is 3 times slower than that of β; hydration of α gives rise to a new phase with a very low refractive index. N. Thon

ASM-SLA METALLURGICAL LITERATURE CLASSIFICATION

APPROVED FOR RELEASE: 06/08/2000 CIA-RDP86-00513R000204910009-6"

"APPROVED FOR RELEASE: 06/08/2000 CIA-RDP86-00513R000204910009-6

CA

PROCESSES AND PROPERTIES INDEX

No. 9

2

Area measurements in thermograms for quantitative estimations and the determination of heats of reaction. L. G. Berg (N. S. Kurnakov Inst. Acad. Sci. U.S.S.R.). *Compt. rend. acad. sci. U.R.S.S.* 49, 648-51(1945)(in English).—Methods are given for more accurately defining the areas under heating curves in thermographic analysis where (1) changes of heat transfer and (2) overlapping of two effects occur. Data for comparison of dolomites by thermographic analysis show an accuracy of 2-3% based on chem. analysis. Heats of reaction are most rapidly detd. by this method. Cf. *C.A.* 36, 3004[4].

M. L. Nielsen

ASM-SLA METALLURGICAL LITERATURE CLASSIFICATION

APPROVED FOR RELEASE: 06/08/2000 CIA-RDP86-00513R000204910009-6"

"APPROVED FOR RELEASE: 06/08/2000 CIA-RDP86-00513R000204910009-6

BERG, L. [G.]

"Thermography (Heating and Cooling Curves)" with A. Nikolayev and E. Rode . Reviewed in Acta Physicokhim. URSS, Vol. XXI, No. 1, 1946

APPROVED FOR RELEASE: 06/08/2000 CIA-RDP86-00513R000204910009-6"

"APPROVED FOR RELEASE: 06/08/2000 CIA-RDP86-00513R000204910009-6

2

No.1

Modifications of calcium sulfate hemihydrate. L. C. Berg and V. N. Sveshnikova (N. S. Kurnakov Inst. Gen. Inorg. Chem. Acad. Sci. U.S.S.R., Moscow). *Izvest. Akad. Nauk S.S.S.R., Otdel. Khim. Nauk* 1946, 19-24.—In addn. to the evidence from the differences of heat and of rate of hydration, not necessarily conclusive (the differences might be due to different dispersities), further proof of existence of 2 modifications of $CaSO_4.0.5H_2O$, α and β, is gained from thermography, crystal optics, and photomicrography. Thermograms of α, prepd. according to van't Hoff (*Z. physik. Chem.* 45, 257 (1903)) or Davis (*C.A.* 1, 2359), show a strong endothermal dehydration effect at 190-210°; β, prepd. according to Kelley (*C.A.* 35, 5381[4]) shows a dehydration effect at 170-80° and a distinct exothermal effect of transition to insol. anhydrite at 330-70°, absent on the α thermogram. Autoclave plaster is essentially α, stucco plaster essentially β. Optical consts. are: for α, n_γ 1.583, n_α 1.550; for β, 1.556 and 1.550. The rate of hydration measured by the heat evolved is about 2.5 times as much for β as for α; with the latter, max. temp. was attained in 7 and in 35 min. at a $H_2O/CaSO_4$ ratio of 8/10 and 6/10, resp., whereas with β the max. was attained in 7 min. at a ratio 8/10. Ordinary stucco plaster attained max. temp. in 12-13 min.; one sample exhibited two temp. max., at 3 and at 45 min., owing, evidently, to hydration in 2 stages, from sol. anhydrite to $CaSO_4.$ $^1/_2H_2O$ (α) and from the latter to $CaSO_4.2H_2O$. The products of hydration of α and of β are thermographically different: hydrated β gives the normal thermogram, but the product from α shows 3 endothermal effects, at 100-2°, 130-40°, and 190-200°, the 1st effect occurring suddenly after a considerable superheating ("superheating wave"); this product contains a new phase, not yet elucidated, of very low n.

N. Thon

ASB-SLA METALLURGICAL LITERATURE CLASSIFICATION

APPROVED FOR RELEASE: 06/08/2000 CIA-RDP86-00513R000204910009-6"

"APPROVED FOR RELEASE: 06/08/2000 CIA-RDP86-00513R000204910009-6

BERG, L. G.

"Determination of Heats of Reaction," 1946.

From Izvestia Akad. Nauk, Chem. Ser., 1946, No. 1,

APPROVED FOR RELEASE: 06/08/2000 CIA-RDP86-00513R000204910009-6"

"APPROVED FOR RELEASE: 06/08/2000 CIA-RDP86-00513R000204910009-6

7

4

Analysis of carbonate ores. L. G. Berg. U.S.S.R 69,792, Nov. 30, 1947. The nature of the components is evaluated from a thermal curve of the analyzed ore. The relative quantities are estimated from the ratio of the sectors of the curve.

M. Hosch

APPROVED FOR RELEASE: 06/08/2000 CIA-RDP86-00513R000204910009-6"

"APPROVED FOR RELEASE: 06/08/2000 CIA-RDP86-00513R000204910009-6

BERG, L. G.

"Thermography and its Use," Nauka i Zhizn', No. 4, 1947.

APPROVED FOR RELEASE: 06/08/2000 CIA-RDP86-00513R000204910009-6"

"APPROVED FOR RELEASE: 06/08/2000 CIA-RDP86-00513R000204910009-6

BERG, L. G. PA 54T27

USSR/Chemistry - Salts, Systems of Sep 1947
Chemistry - Stratification

"The Singly Related System $AgNO_3 + TlJ \rightarrow AgJ + TlNO_3$," L. G. Berg, I. N. Lepeshkov, 12 pp

"Izv Sektora Fiz-Khim Analiza" Vol XV

Authors conducted experiments to determine stratification of above given equation in presence of chemical bonds between various components, particularly fields in which region of stratification expands. Discusses setting up experiments, methods, and evaluation of results. Failed to determine upper limit of stratification since salts began to decompose at 500°. Prof A. G. Bergman aided experiments.

LC 54T27

APPROVED FOR RELEASE: 06/08/2000 CIA-RDP86-00513R000204910009-6"

"APPROVED FOR RELEASE: 06/08/2000 CIA-RDP86-00513R000204910009-6

BERG, L. G.

27771. BERG, L. G. i BELYANKIN, D. S.--gips i produkty yego obelvozhivaniya. vogl. 2-y avt: A(1) G. Berg. Mest. Stroit. Materialy, 1948, vyp. 9, S. 9-15.

SO: Letopis' Zhurnal'nykh Statey, Vol. 37, 1949.

APPROVED FOR RELEASE: 06/08/2000 CIA-RDP86-00513R000204910009-6"

"APPROVED FOR RELEASE: 06/08/2000 CIA-RDP86-00513R000204910009-6

cA

Use of differential thermography in the study of aging in aluminum alloys. L. P. Luzhnikov and L. G. Berg. *Zavodskaya Lab.* 14, 824-8(1948).—The useful differential technique was used with a heating rate of 4°/min., a recorder having a sensitivity of 0.04°/mm., and 99.9% Al as a comparison standard. Wrought Al alloys contg. about 4.7% Cu, up to 1.3% Mg, and up to 0.8% Mn were tested after water quenching from 500° and aging at 15-20° for 0-168 hrs. (Nos. 1-6), aging at 170° for 16 hrs. (No. 6), and annealing (No. 7). All of the unaged specimens showed two exothermic effects, one at about 70° assocd. with room temp. aging, and one at about 300° assocd. with artificial aging. Almost all specimens except Nos. 6 and 7 and the pure Al-Cu alloy showed an endothermic effect at about 225° assocd. with the "inversion" of natural aging. The 70° exothermic effect decreased and disappeared on room temp. aging. The 300° exothermic effect was little affected by room temp. aging but decreased greatly on artificial aging and disappeared in No. 7. Above about 325° there was an endothermic effect in all specimens assocd. with the soln. of the ppt.

A. G. Guy

See B-78524, 8 Sept 54 for comments and description.

APPROVED FOR RELEASE: 06/08/2000 CIA-RDP86-00513R000204910009-6"

"APPROVED FOR RELEASE: 06/08/2000 CIA-RDP86-00513R000204910009-6

CA

Rapid quantitative phase analysis. L. G. Berg (Acad. Sci. U.S.S.R.). *Zavodskaya Lab.* 14, 1171-5(1948).—The mineral sample is decompd. by heating in a tube muffle, the exit gas being led into a differential manometer, which permits a rapid detn. of the rate of evolution; the differential manometer is a horizontal glass tube loop with an Hg droplet as the movable indicator of vol. Automatic multiple app. is described for handling samples rapidly. The detn. of CO_2 evolved at different temps. permits phase and compn. analysis of such systems as gypsum, kaolin, dolomite, and calcite. Detns. of moisture, ammoniates, etc., are also readily adaptable to the app.

G. M. Kosolapoff

APPROVED FOR RELEASE: 06/08/2000 CIA-RDP86-00513R000204910009-6"

"APPROVED FOR RELEASE: 06/08/2000 CIA-RDP86-00513R000204910009-6

C4

New method of physicochemical investigation of phases in mixtures. L. G. Berg. *Izvest. Sektora Fiz.-Khim. Anal., Inst. Obshchei i Neorg. Khim., Akad. Nauk S.S.S.R.* 19, 249-55(1949).—The two methods described are gas-volumetric and thermographic. The first of these consists of heating a mixt. stepwise at definite temps. and detg. the vol. of gas evolved in each step. Each of the components of the mixt. liberates a gas (CO_2, H_2O, NH_3, O, etc.) at some definite temp. and the amt. of the component is calcd. from the vol. of gas evolved. The gas vol. is detd. in a specially designed gas buret. Samples of 0.05-0.2 g. are suitable for this procedure (cf. *C.A.* 44, 10382*e*). Since detn. of H_2O vapor is difficult because it condenses, the vapor is passed through CaH_2, and the equiv. vol. of H given off is measured. The thermographic method consists of detg. the thermal effect of an analyzed substance to which was added a known quantity of substance of which the thermal effect is known. The quantity of sought substance is calcd. from the ratio of the areas of the 2 thermal effects.

M. Hoch

APPROVED FOR RELEASE: 06/08/2000 CIA-RDP86-00513R000204910009-6"

"APPROVED FOR RELEASE: 06/08/2000 CIA-RDP86-00513R000204910009-6

BCS

2300. **Rapid thermal analysis.**—L. G. Bubo and I. S. Rassonskaya (*Dok. Akad. Nauk, U.S.S.R.*, 73, 113, 1950). An investigation was carried out on the suitability of D.T.A. with high heating rates for small samples of 20–100 mg. The sample and the standard (Al_2O_3) were placed into quartz test-tubes (3 mm. dia.) which were inserted into a small metal container fitted with a lid; the block was suspended on a rack. The block with the samples and thermocouples (Pt-Pt/Rh., 0·2 mm. dia.) inserted into them was lowered into a heated furnace. Materials tested included $MgSO_4$, $Mg(OH)_2$, dolomite, magnesite and clay. Fusing and boiling effects occurred at the same temps., regardless of the heating rate and gave well marked horizontal areas. For the dehydration processes the character of the curve remained constant and typical for a given salt. The dissociation of carbonates occurred at the same temp. independent of the heating rate except with dolomite (*c.* 800° C. instead of the normal 740°–750° C.). However, this is quite natural since with dolomite the first effect corresponds to its decomposition into $CaCO_3$ and $MgCO_3$, with subsequent immediate dissociation of $MgCO_3$. A comparison showed insignificant temp. deviations. It was therefore concluded that the method was suitable for the study of the phase characteristics of rocks. Some D.T.A. curves of mixtures were made to establish the possibility of identifying separate phases. The mixtures included dolomite with magnesite, and $Mg(OH)_2$ with $Mg(HCO_3)_2$. It is concluded that: (1) The proposed rapid method of phase analysis can be used for the qualitative characterization of rocks, ores and natural salts; (2) the optimal batch wt. is 30–80 mg.; (3) the heating rate can be regulated by changing the mass of the block. (4 figs.)

APPROVED FOR RELEASE: 06/08/2000 CIA-RDP86-00513R000204910009-6"

"APPROVED FOR RELEASE: 06/08/2000 CIA-RDP86-00513R000204910009-6

CA

Effect of mechanical pressure on reactions between salts in the solid state. L. G. Berg, O. K. Yanat'eva, and K. M. Savitskii. *Doklady Akad. Nauk S.S.S.R.* 75, 263-6 (1950).—Finely ground mixts. of the salts were subjected, at room temp., to a pressure of 6000 atm. for 5 min. (1) In the systems $CaCO_3 + MgCO_3$ and $K_2SO_4 + 2MgSO_4.H_2O$, thermograms taken before and after application of the pressure proved to be identical, indicating absence of a reaction (formation of dolomite or langbeinite; resp.), as expected from calcn. of the mol. vols. In the following systems, however, compression did result in the appearance of slight new thermal effects in the thermograms, which increased on repeated grinding and compression, and thus indicated some slight degree of chem. reaction. (2) In $CaCO_3 + MgSO_4.H_2O$, taken either in a 2:1 or a 1:10 mole ratio (the latter corresponding to equal vols.), compression resulted, in the 1st instance, in a new endothermal effect at about 750°, resembling that of dolomite; compression at 300° gave rise to an addn. effect at 650°, which might be ascribed to magnesite, although even pure kieserite sometimes shows a very slight endothermal effect at 620°. With a 1:10 mol. ratio, endothermal effects at 600 and at 740°, and a small exothermal effect at 770-90°, were observed both in the initial mixt. and after compression. The endothermal $CaCO_3$ dissocn. effect at 900° was occasionally suppressed, owing no doubt to superposition of an exothermal effect possibly due to interaction between CaO and $MgSO_4$. The amt. of reaction products in this system does not, at any rate, exceed 1-2%, and, consequently, these products cannot be detected by x-rays or crystalloptic methods. (3) In $Na_2SO_4 + 3K_2SO_4$, compression causes the endothermal effect at 575° (polymorphic transition of K_2SO_4) to disappear, whereas the Na_2SO_4 effect at 240° remains unchanged. Furthermore, two new effects appear at 430° and at 450°; the first corresponds to decompn. of glaserite $3K_2SO_4.Na_2SO_4$, whereas the 2nd might belong to transition of K_2SO_4 at a temp. lowered owing to formation of solid soln. On 5 times repeated compression, the effect at 450° increased relative to the polymorphic transition effect at 520°. (4) In $Na_2SO_4 + CaSO_4.0.5H_2O$, formation of glauberite, $Na_2SO_4.CaSO_4$ was clearly indicated by the disappearance of the exothermal effect at 345°, ascribed to rearrangement of the lattice of anhyd. $CaSO_4$; the endothermal effects at 175 and at 240° (dehydration of $CaSO_4.0.5\ H_2O$ and transition of Na_2SO_4, resp.) remained unchanged. A slight endothermal effect, absent in the original mixt., appeared on compression at 540°. The amt. of glauberite formed increased on repeated compressions, and also on prolonged (6 hrs.) single compression. N. Thon

APPROVED FOR RELEASE: 06/08/2000 CIA-RDP86-00513R000204910009-6"

"APPROVED FOR RELEASE: 06/08/2000 CIA-RDP86-00513R000204910009-6

USSR/Chemistry - Measurement of Gas Volumes 11 Aug 51

"Investigation of Gas Evolution Processes By Automatic Recording of the Volume of Gases On a Kurnakov Temperature Recorder," L. G. Berg, B. Ya. Teytel'baum, Chem Inst imeni A. Ye. Arbuzov, Kazan' Affiliate, Acad Sci USSR

"Dok Ak Nauk SSSR" Vol LXXIX, No 5, pp 791-794

An automatic gas burette combined with stepwise heating is satisfactory when the qual compn of the gas is known: Otherwise slow gradual heating and frequent measurements of the temp of the sample (by means of a thermocouple) and vol of evolved

210T22

USSR/Chemistry - Measurement of Gas Volumes (Contd) 11 Aug 51

gas must be used. This can be done on a special temp recorder assembly in which a calibrated resistance wire (Pt or nichrome) sheathed in a mercury-filled tube (gas burette) serves as one of the legs of a bridge. T, Δt, and v can then be measured simultaneously. An investigation of the decompn of dolomite on heating and dehydration of $Mg(OH)_2$ - $Ca(OH)_2$ are cited as illustrations of the use of this assembly. Various stages of these conversions corresponding to individual reactions can be distinguished and evaluated.

210T22

BERG, L. G.

APPROVED FOR RELEASE: 06/08/2000 CIA-RDP86-00513R000204910009-6"

"APPROVED FOR RELEASE: 06/08/2000 CIA-RDP86-00513R000204910009-6

USSR/Chemistry - Gas Analysis
Geology - Prospecting

Sep 51

"A New Automatic Gas Burette"

Nauka i Zhizn'" Vol XVIII, No 9, p 29

The analysis of a mineral or rock normally requires a long time (up to several days), while with the new device developed by L. G. Berg, Prof of Chem Inst imeni Arbuzov, Kazan' Affiliate, Acad Sci USSR, B. Ya. Tetel'baum, and S. G. Ganelina it can be done in 30 min. The method is based on the principle of phase analysis developed by Berg. As every mineral evolves gases (H_2O, O_2, etc.) at sp temps, any rock can be identified by measuring the vol of gases

213T22

evolved by a definite quantity of it in the powdered state on heating. The measurement of the gas vol is automatic: when an Hg drop has reached the last division of the scale, there is a click, a red lamp lights up, and a new drop of Hg appears at the bottom of the scale.

213T22

BERG, L. G.

APPROVED FOR RELEASE: 06/08/2000 CIA-RDP86-00513R000204910009-6"

"APPROVED FOR RELEASE: 06/08/2000 CIA-RDP86-00513R000204910009-6

BTR

4646* **Thermographic Analysis at High Pressures.** (In Russian.) L. G. Berg and I. S. Rassomskaia. *Doklady Akademii Nauk SSSR*, new ser., v. 81, Dec. 11, 1951, p. 855-858

Describes and illustrates apparatus for measuring temperature of dissociation of compounds at high pressures. Data for $Mg(OH_2)$, $Ca(OH)_2$, and similar minerals or compounds are charted, tabulated, and discussed.

APPROVED FOR RELEASE: 06/08/2000 CIA-RDP86-00513R000204910009-6"

"APPROVED FOR RELEASE: 06/08/2000 CIA-RDP86-00513R000204910009-6

BERG, L.G.; RASSONSKAYA, I.S.

Thermographic determination of dissociation pressure. Izv.Sekt.fiz.-khim.anal. 22:140-154 '53. (MLRA 7:5)

1. Institut obshchey i neorganicheskoy khimii im. N.S.Kurnakova Akademii nauk SSSR. (Dissociation) (Thermochemistry)

APPROVED FOR RELEASE: 06/08/2000 CIA-RDP86-00513R000204910009-6"

"APPROVED FOR RELEASE: 06/08/2000 CIA-RDP86-00513R000204910009-6

BERG, L.G., professor, redaktor; TOLKACHEV, S.S., redaktor; SMIRNOVA, A.V., tekhnicheskiy redaktor.

[Proceedings of the conference on thermal analysis (Kazan, 1953)] Trudy pervogo soveshchaniia po termografii (Kazan', 1953). Moskva 1955. 333 p. (MLRA 8:11)

1. Akademiya nauk SSSR. Kazanskiy filial.
(Thermal analysis)

APPROVED FOR RELEASE: 06/08/2000 CIA-RDP86-00513R000204910009-6"

"APPROVED FOR RELEASE: 06/08/2000 CIA-RDP86-00513R000204910009-6

BERG, L. G.

USSR/Physical Chemistry - Thermodynamics. Thermochemistry. Equilibrium. Physico-chemical Analysis. Phase Transitions, B-8

Abst Journal: Referat Zhur - Khimiya, No 1, 1957, 354

Author: Berg, L. G., and Sidorova, Ye. Ye.

Institution: None

Title: None

Original Periodical: Tr. 1-go soveshchaniya po termografii. Kazan, 1953, Moscow-Leningrad, Izd-vo AN SSSR, 1955, 101-107

Abstract: A short survey of existing methods for the determination of the pressure of saturated vapors (P) is given. A thermographic method for the determination of P of liquids is proposed; the method is a modification of the isobaric method for determining P. The method consists in the recording by means of a pyrometer of the boiling temperature of the samples under investigation. Equipment is described for the determination of P of individual liquids, binary mixtures, and aqueous salt solutions. Overheating was eliminated by the introduction of

Card 1/2

APPROVED FOR RELEASE: 06/08/2000 CIA-RDP86-00513R000204910009-6"

"APPROVED FOR RELEASE: 06/08/2000 CIA-RDP86-00513R000204910009-6

BERG, L. G.

USSR/Physical Chemistry - Thermodynamics. Thermochemistry. Equilibrium. Physico-chemical Analysis. Phase Transitions, B-8

Abst Journal: Referat Zhur - Khimiya, No 1, 1957, 351

Author: Berg, L. G., Lepeshkov, I. N., and Rassonskaya, I. S.

Institution: None

Title: Thermographic Analysis of Salts

Original Periodical: Tr. 1-go soveshchaniya po termografii. Kazan, 1953, Moscow-Leningrad, Izd-vo AN SSSR, 1955, 171-181

Abstract: The basic steps in the development of the thermographic study of salts during the last few years are described. A temperature table of the thermal effects recorded on the heating curves of some binary salts and crystal hydrates is given.

Card 1/1

APPROVED FOR RELEASE: 06/08/2000 CIA-RDP86-00513R000204910009-6"

"APPROVED FOR RELEASE: 06/08/2000 CIA-RDP86-00513R000204910009-6

magnesium carbonate into MgO and CO_2 presages the decomposition of dolomite into free carbonates. When dolomite is heated under a pressure greater than 75 atm, then the mineral should decompose into free carbonates without the dissociation of $MgCO_3$, inasmuch as the latter process will occur at a higher temperature. Actually, the effect of dissociation of $MgCO_3$ was shifted to a temperature of 850° when dolomite was heated under pressures of 90 to 100 atm, as shown on the thermal curve. At 730° to 150°, other small endothermal effects are noted. These should be interpreted as the decomposition of dolomite into magnesium and calcium carbonates. Thermal curves have shown that, to obtain caustic dolomite of good quality, the roasting should be done in an atmosphere of carbon dioxide gas at 650° to 750°. The authors have discovered that 1) dolomite in the presence of NaCl begins to decompose at 500°; 2) the presence of NaCl not only lowers the temperature of decomposition of dolomite, but also the temperature of dissociation of both $MgCO_3$ and $CaCO_3$ (at approximately 50° to 60°); 3) on roasting in the presence of NaCl in a current of air, CaO may be detected even at 550°; 4) at temperatures of 700° and higher, magnesium oxide forms dead-burned

APPROVED FOR RELEASE: 06/08/2000 CIA-RDP86-00513R000204910009-6"

"APPROVED FOR RELEASE: 06/08/2000 CIA-RDP86-00513R000204910009-6

15-57-1-500

The Use of Thermal Curves in Studying the Roasting (Cont.)

MgO (periclase structure) much more quickly in the presence of NaCl than without it. From the above data, the authors conclude that the proper method of roasting dolomite, in order to obtain caustic dolomite, is to roast it in an atmosphere of CO_2 at 600° to 650° in the presence of NaCl, or at 650° to 750° if NaCl is not used.

Card 3/3

Ye. P. V.

APPROVED FOR RELEASE: 06/08/2000 CIA-RDP86-00513R000204910009-6"

"APPROVED FOR RELEASE: 06/08/2000 CIA-RDP86-00513R000204910009-6

BERG, L.G.

BERG, L.G., professor

Possible uses of gas volumetric analysis. Priroda 44 no.9:89-92 S'55. (MLRA 8:11)

1. Kazanskiy filial Akademii nauk SSSR
(Volumetric analysis)

APPROVED FOR RELEASE: 06/08/2000 CIA-RDP86-00513R000204910009-6"

"APPROVED FOR RELEASE: 06/08/2000 CIA-RDP86-00513R000204910009-6

Berg, L. G.

USSR/Analytical Chemistry - General Questions G-1

Abs Jour : Referat Zhur - Khimiya, No 3, 1957, 8407

Author : Berg, L. G.
Inst : Kazan Branch of the Academy of Sciences USSR
Title : Gas Volumetric Analysis and Its Prospects in Science and Practices

Orig Pub : Tr. Kazansk. fil. AN SSSR, Section on Chemical Sciences, 1956, No 3, 5-13.

Abstract : No abstract.

Card 1/1 -11-

APPROVED FOR RELEASE: 06/08/2000 CIA-RDP86-00513R000204910009-6"

"APPROVED FOR RELEASE: 06/08/2000 CIA-RDP86-00513R000204910009-6

BERG, L.G.

USSR/Analytical Chemistry - General Questions G-1

Abs Jour : Referat Zhur - Khimiya, No 2, 1957, 4705

Author : Berg, L.G.
Inst : Kazan Filiate of the Academy of Sciences USSR
Title : Rapid Quantitative Phase Analysis

Orig Pub : Tr. Kazansk. fil. AN SSSR, ser. khim. n., 1956, No 3, 57-72

Abstract : There are considered the theoretical foundations of rapid quantitative phase analysis and are set forth its applications, as well as the procedure of carrying out the analysis of water content, analysis of mixtures of gypsum, kaolin, dolomite and calcite, analyses of polyhalite, slaked lime, chlorinated lime, clayey-carbonate rocks (marl), and of substances having the same dissociation temperature.

Card 1/1 - 21 -

APPROVED FOR RELEASE: 06/08/2000 CIA-RDP86-00513R000204910009-6"

"APPROVED FOR RELEASE: 06/08/2000 CIA-RDP86-00513R000204910009-6

Category: USSR / Physical Chemistry
Thermodynamics. Thermochemistry. Equilibrium. Physico-chemical analysis. Phase transitions. B-8

Abs Jour: Referat Zhur-Khimiya, No 9, 1957, 29919

variant and non-variant processes, corresponding to different branches and singular points of p - t diagram. The following non-variant equilibria were ascertained: $Na_2S_2O_3 \cdot 5H_2O$ + $Na_2S_2O_3$ + solution + vapor at 48° and 28 mm Hg; $CuSO_4 \cdot 5H_2O$ + $CuSO_4 \cdot 3H_2O$ + solution + vapor at 96° and 540 mm Hg; $CoSO_4 \cdot 7H_2O$ + $CoSO_4 \cdot 6H_2O$ + solution + vapor at 45° and 65 mm Hg; $CoSO_4 \cdot 6H_2O$ + $CoSO_4 \cdot H_2O$ + solution + vapor at 107° and 690 mm Hg; $CoSO_4 \cdot 6H_2O$ + $CoSO_4 \cdot H_2O$ + $CoSO_4$ + vapor at 65° and 12 mm Hg. The assumption is made of the possible formation, in the course of the dehydration process, of intermediate phases having a metastabile structure.

Card : 2/2 -36-

APPROVED FOR RELEASE: 06/08/2000 CIA-RDP86-00513R000204910009-6"

"APPROVED FOR RELEASE: 06/08/2000 CIA-RDP86-00513R000204910009-6

BERG, L.G.

Thermographic investigations of dehydration processes. Izv. Kazan.fil.AN SSSR.Ser.khim.nauk no.4:133-139 '57. (MIRA 12:5)

(Dehydration) (Thermochemistry)

APPROVED FOR RELEASE: 06/08/2000 CIA-RDP86-00513R000204910009-6"

"APPROVED FOR RELEASE: 06/08/2000 CIA-RDP86-00513R000204910009-6

BERG, L. G.

"Diffusion Method of Mineral Synthesis" p. 176

"A New Precision Thermographic Method for Determining Thermal Constants and Heat Effects," p. 63 with M. Sh. Yagfarov

~~"Synthesis and Structure of Hydrosilicates containing Simple and Complex Heavy Metal Cations," p. 38~~

Transactions of the Fifth Conference on Experimental and Applied Mineralogy and Petrography, Trudy ... Moscow, Izd-vo AN SSSR, 1958, 516pp.

reprints of reports presented at conf. held in Leningrad, 26-31 Mar 1956. The purpose of the conf. was to exchange information and coordinate the activities in the fields of experimental and applied mineralogy and petrography, and to stress the increasing complexity of practical problems.

APPROVED FOR RELEASE: 06/08/2000 CIA-RDP86-00513R000204910009-6"

"APPROVED FOR RELEASE: 06/08/2000 CIA-RDP86-00513R000204910009-6

J

COUNTRY : USSR

CATEGORY : Soil Science. Physical and Chemical Properties of Soil

ABS. JOUR. : RZhBiol., No. 4,1959, No. [illegible]

AUTHOR : Berg, L.G.; Sitnikov, N.V.

INST. :

TITLE : [illegible] Determination of Soil [illegible] by Hydride Method.

ORIG. PUB. : Pochvovodeniye, 1958, No.5, 78-80

ABSTRACT : It is proposed that the reaction of the interaction of Ca hydride with water be used to determine soil moisture. The value of this method is manifested by the indicator of the amount of reacting moisture. At room temperature the hydride method can be used to determine the amount of weakly bound water in the soil (mechanical and physical-chemical binding). When the measurement is conducted at a temperature of 100 degrees, the total amount of water

Card: 1/2

APPROVED FOR RELEASE: 06/08/2000 CIA-RDP86-00513R000204910009-6"

"APPROVED FOR RELEASE: 06/08/2000 CIA-RDP86-00513R000204910009-6

BERG, L.G.; GROMAKOV, S.D.; ZOROATSKAYA, I.V.; AVERKO-ANTONOVICH, I.N.

[Methods for selecting coefficients in chemical equations] Sposoby podbora koeffitsientov v khimicheskikh uravneniiakh. Kazan', Izd-vo Kazanskogo univ., 1959. 147 p. (MIRA 14:10)
(Chemical equations)

APPROVED FOR RELEASE: 06/08/2000 CIA-RDP86-00513R000204910009-6"

"APPROVED FOR RELEASE: 06/08/2000 CIA-RDP86-00513R000204910009-6

5(2,4)

AUTHORS: Berg, L. G., Gromakov, S. D., Zoroatskaya, I. V.

SOV/20-125-1-19/67

TITLE: Accelerated Method for the Investigation of Phase Diagrams According to the Thermographic Method (Uskorennyy metod izucheniya diagramm sostoyaniya metodom termografii)

PERIODICAL: Doklady Akademii nauk SSSR, 1959, Vol 125, Nr 1, pp 75-78 (USSR)

ABSTRACT: The authors suggest a simultaneous recording of thermographic data for 2, in some cases even 3 substances investigated. The thermal effects which take place in 2 samples were recorded clearly and separately on the differential curve even if they take place at almost the same temperatures. Thus, the investigation can be carried out twice as rapidly as in the normal case. This method, however, also has certain deficiencies: the main deficiency may be eliminated by the calibration of the differential thermocouple. This deficiency is due to the fact that heating in both samples takes place at a small temperature difference as far as the thermal properties of these samples are different. The suggested method was checked on the binary system $KCl-SrCl_2$ (Ref 2).

Card 1/3

APPROVED FOR RELEASE: 06/08/2000 CIA-RDP86-00513R000204910009-6"

"APPROVED FOR RELEASE: 06/08/2000 CIA-RDP86-00513R000204910009-6

Its phase diagram is relatively complicated and therefore well suited for testing the utility of the new method (Fig 1). Some conclusions on the mechanism of the chemical interaction between the substances can be drawn from a comparison of the two heating curves. The authors here use only a few examples from the results obtained. They discuss the shape of the differential curves (Figs 2,3). The complicated shape of the curve (d, e, f) indicates that the effect concerned (575°) takes place in both samples. Actually, it should take place only in sample 2, then it would be expressed by a simple "endothermal line" which passes through point d' and f. If this effect is observed as an exothermic phenomenon also in sample 1 a complicated shape of the cooling curves results due to the combination. The mentioned example of an indefinite interpretation of the thermographic data is no fundamental difficulty in the accelerated method of the thermographic investigations suggested by the authors. The easiest method of removing these deficiencies is a repeated investigation of individual compounds

APPROVED FOR RELEASE: 06/08/2000 CIA-RDP86-00513R000204910009-6"

"APPROVED FOR RELEASE: 06/08/2000 CIA-RDP86-00513R000204910009-6

Accelerated Method for the Investigation of Phase Diagrams According to the Thermographic Method SOV/20-125-1-19/67

which are combined with a sample of another composition or by recording only one sample. There are 3 figures and 2 Soviet references.

ASSOCIATION: Kazanskiy gosudarstvennyy universitet im. V. I. Ul'yanova-Lenina (Kazan' State University imeni V. I. Ul'yanov-Lenin)

PRESENTED: October 25, 1958, by I. I. Chernyayev, Academician

SUBMITTED: March 10, 1958

Card 3/3

APPROVED FOR RELEASE: 06/08/2000 CIA-RDP86-00513R000204910009-6"

"APPROVED FOR RELEASE: 06/08/2000 CIA-RDP86-00513R000204910009-6

24(7)

AUTHORS: Berg, L. G., Averko-Antonovich, I. N. SOV/20-126-1-21/62

TITLE: On the Nature of Luminescence of Marble
(O prirode svetimosti mramora)

PERIODICAL: Doklady Akademii nauk SSSR, 1959, Vol 126, Nr 1, pp 81-82
(USSR)

ABSTRACT: Technical publications have long contained descriptions (Ref 1) on the luminescence of some substances (diamond, marble, phosphorite, fluorite) at low heating. This phenomenon was termed "thermoluminescence". According to modern opinions, thermoluminescence can be explained as follows: In the absorption of sufficiently short-waved light in non-conducting substances, electrons are torn off from atoms (ionization). The torn-off ions can then accumulate near any defects in the crystal lattice, the energy state of these electrons remaining higher than normal. For the liberation of electrons from these spots, a certain energy is required which can be derived from the heat energy of the body at an increase in temperature. The authors observed a rather bright luminescence when natural marble was heated to $\sim$180 - 200°C, and they also investigated

Card 1/4

APPROVED FOR RELEASE: 06/08/2000 CIA-RDP86-00513R000204910009-6"

"APPROVED FOR RELEASE: 06/08/2000 CIA-RDP86-00513R000204910009-6

some properties of the marble samples before and after luminescence. The results found can hardly be agreed with the above-mentioned explanation of luminescence. Subsequently, the authors put forward the results of some properties of marble before and after luminescence, and they also give a new explanation for the causes of this luminescence. The investigations were carried out on various samples of coarsely crystalline to nearly microcrystalline marble of Soviet and foreign origin (e.g. Carrara, Italy). All samples were capable of luminescing, but with different intensities. Even some kinds of dense limestone are luminescent, but much more weakly. Also other forms of natural calcium carbonate were investigated for a possible capability of luminescing, namely aragonite and calcite stalactites. No luminescence was observed on them. Most luminescent are samples of coarsely crystalline marble. The duration of luminescence depends on the size of the piece, and lasts, at 160 - 200°, half an hour or longer. A figure adjoining shows a luminescent marble sample. Thermograms and roentgenograms of marble were also recorded. The authors also investigated the changes in volume occurring during luminescence, and also the mechanical breaking strength before and after

APPROVED FOR RELEASE: 06/08/2000 CIA-RDP86-00513R000204910009-6"

"APPROVED FOR RELEASE: 06/08/2000 CIA-RDP86-00513R000204910009-6

luminescence. No thermal effect was observed during luminescence. The lines on the roentgenograms of the marble samples slightly differ before and after luminescence. Before luminescence they are blurred, afterwards they are more distinctly outlined. The volume of the marble samples increased by 0.5% after luminescence. The strength of the samples decreased very much after luminescence. The results of the investigations discussed cannot be explained by thermo-luminescence. The authors consider other causes possible: marble - being a metamorphic rock - is formed under the influence of strong pressure, and perhaps of an increased temperature, which must necessarily influence the crystal structure of the calcium carbonate, namely by deformation, and perhaps even by a reduction in volume. In heating,

APPROVED FOR RELEASE: 06/08/2000 CIA-RDP86-00513R000204910009-6"

"APPROVED FOR RELEASE: 06/08/2000 CIA-RDP86-00513R000204910009-6

On the Nature of Luminescence of Marble SOV/20-126-1-21/62

the calcite might return to its normal crystal structure. Extinguished marble samples can no longer be made shining by the influence of rays. There are 1 figure and 3 references, 2 of which are Soviet.

ASSOCIATION: Kazanskiy gosudarstvennyy universitet im. V. I. Ul'yanova-Lenina (Kazan' State University imeni V. I. Ul'yanov-Lenin)

PRESENTED: November 19, 1958, by A. Ye. Arbuzov, Academician

SUBMITTED: November 12, 1958

Card 4/4

APPROVED FOR RELEASE: 06/08/2000 CIA-RDP86-00513R000204910009-6"

"APPROVED FOR RELEASE: 06/08/2000 CIA-RDP86-00513R000204910009-6

5(2) SOV/20-126-3-30/69

AUTHORS: Berg, L. G., Borisova, L. A.

TITLE: On the Nature of Link's Salt (O prirode soli Linka)

PERIODICAL: Doklady Akademii nauk SSSR, 1959, Vol 126, Nr 3, pp 569 - 570 (USSR)

ABSTRACT: Endeavors for over 100 years to produce dolomite by direct precipitation from solutions of calcium and magnesium salts remained without success. Link's salt is quantitatively similar to dolomite, but the composition of the sediment obtained is unstable, also there were no rhombohedrons possessing the refractive indices of dolomite. These salts are therefore termed as Link's mixing salts. Figure 1 shows the thermogram of Link's salt cleaned from Cl' and SO''_4 ions by rinsing. A comparison of the X-ray pictures of Link's salts and the Shishimskiy dolomite shows that Link's salt represents a solid solution of calcite in dolomite (Fig 2). At the temperatures of the earth's surface, a dolomite-calcite mixture is much stabler than the mentioned solid solutions (Refs 2-4). Thus, it can be expected that the said less stable solid solution can be changed with

Card 1/2

APPROVED FOR RELEASE: 06/08/2000 CIA-RDP86-00513R000204910009-6"

"APPROVED FOR RELEASE: 06/08/2000 CIA-RDP86-00513R000204910009-6

On the Nature of Link's Salt

SOV/20-126-3-30/69

time to the stabler form (mechanical dolomite-calcite mixture) under usual conditions. No higher temperature will be needed (Ref 2). This reaction could occur in case of a rapid carbonate crystallization. A very wide paragenesis of calcite with dolomite leads to this assumption. A slow interaction of the two solutions by diffusion can, however, produce immediately the stable calcite-dolomite mixture. There are 2 figures and 6 references, 1 of which is Soviet.

ASSOCIATION: Kazanskiy gosudarstvennyy universitet im. V. I. Ul'yanova-Lenina (Kazan' State University imeni V. I. Ul'yanov-Lenin)

PRESENTED: February 10, 1959, by B. A. Arbuzov, Academician

SUBMITTED: January 26, 1959

Card 2/2

APPROVED FOR RELEASE: 06/08/2000 CIA-RDP86-00513R000204910009-6"

"APPROVED FOR RELEASE: 06/08/2000 CIA-RDP86-00513R000204910009-6

PEREDERIY, Ivan Alekseyevich, dotsent, kand. tekhn. nauk; NOVOPASHIN, A.A., dotsent, kand. tekhn. nauk, retsenzent; RAYKOV, F.I., retsenzent; BERG, L.G., prof., doktor khim. nauk, nauchnyy red.; ZHIRKOVICH, S.V., dotsent, kand. tekhn. nauk, red.; DENEGA, I.A., tekhn. red.

[High-strength Perederii's gypsum; its technology and characteristics] Vysokoprochnyi gips GP; ego tekhnologiia i svoistva. Kuibyshevskii inzhenerno-stroit. in-t, 1960. 197 p. (MIRA 14:6)

1. Glavnyy inzhener Kuybyshevskogo gipsovogo kombinata (for Raykov)
(Gypsum)

APPROVED FOR RELEASE: 06/08/2000 CIA-RDP86-00513R000204910009-6"

"APPROVED FOR RELEASE: 06/08/2000 CIA-RDP86-00513R000204910009-6

BERG, L.G.; BURMISTROVA, N.P.

Thermographic study of salts with the simultaneous recording of two properties - the thermal effects and the electric conductivity. Zhur. neorg. khim. 5 no.3:676-683 Mr '60. (MIRA 14:6)
(Salts--Thermal properties)
(Salts--Electric properties)

APPROVED FOR RELEASE: 06/08/2000 CIA-RDP86-00513R000204910009-6"

"APPROVED FOR RELEASE: 06/08/2000 CIA-RDP86-00513R000204910009-6

BERG, L.G.; BORISOVA, L.A.

25° Solubility isotherms of the ternary systems Mg^{2+}, Ca^{2+} || CO_3^{2-} - H_2O; Na^+, Ca^{2+} || CO_3^{2-} - H_2O, and Na^+, Mg^{2+} || CO_3^{2-} - H_2O at P_{CO_2} - 1 atm. Zhur.neorg.khim. 5 no.6:1283-1286 Je '60. (MIRA 13:7)

1. Kazanskiy gosudarstvennyy universitet im. V.I. Lenina.
(Systems (Chemistry))

APPROVED FOR RELEASE: 06/08/2000 CIA-RDP86-00513R000204910009-6"

"APPROVED FOR RELEASE: 06/08/2000 CIA-RDP86-00513R000204910009-6

BERG, L.G.; BORISOVA, L.A.

Metastable equilibria in the quaternary system Mg^{2+}, Ca^{2+} || CO_3^{2-}, SO_4^{2-} - H_2O at P_{CO_2} - 1 atm. and t=25°. Zhur.neorg.khim. 5 no.6: 1287-1289 Je '60. (MIRA 13:7)

(Systems (Chemistry)

APPROVED FOR RELEASE: 06/08/2000 CIA-RDP86-00513R000204910009-6"