"APPROVED FOR RELEASE: 06/09/2000 CIA-RDP86-00513R000308010018-0

STEFANESCU, St., candidat in stiinte economice; CATULESCU, A.

Labor productivity in the light industry. Probleme econ 17 no.1:45-57 Ja '64.

APPROVED FOR RELEASE: 06/09/2000 CIA-RDP86-00513R000308010018-0"

"APPROVED FOR RELEASE: 06/09/2000 CIA-RDP86-00513R000308010018-0

MOLDOVAN, I., ing.; CATULESCU, A., ing.

Problems of the high evalutaion of raw material in the cotton industry. Ind text Rum 14 no.11:497-500 N'63

APPROVED FOR RELEASE: 06/09/2000 CIA-RDP86-00513R000308010018-0"

"APPROVED FOR RELEASE: 06/09/2000 CIA-RDP86-00513R000308010018-0

STEFANESCU, St., candidat in stiinte economice; CATULESCU, A.

Internal reserves of production increase in the light industry. Probleme econ 16 no. 5: 40-53 My '63.

APPROVED FOR RELEASE: 06/09/2000 CIA-RDP86-00513R000308010018-0"

"APPROVED FOR RELEASE: 06/09/2000 CIA-RDP86-00513R000308010018-0

CATUMEANU, Ion I. (Bucuresti)

"Tracks of wild animals" by C. Rosetti-Balanescu. Reviewed by Ion. I. Catuceanu. Natura Biologie 13 no.6:80-81 N-D '61.

APPROVED FOR RELEASE: 06/09/2000 CIA-RDP86-00513R000308010018-0"

"APPROVED FOR RELEASE: 06/09/2000 CIA-RDP86-00513R000308010018-0

CATUNEANU, Ion I.

Nesting of the sparrow hawk (Accipiter nisus nisus L.) in Rumania. Trav Muz Nat 4:417-430 '63.

APPROVED FOR RELEASE: 06/09/2000 CIA-RDP86-00513R000308010018-0"

"APPROVED FOR RELEASE: 06/09/2000 CIA-RDP86-00513R000308010018-0

CATUNEANU, V., ing.; ALEXIU, I., ing.; DANILIUC, N., ing.; BALANESCU, C., ing.

Signaling devices with semiconductors for automatic telephone exchanges for institutional use. Telecomunicatii 7 no.2:69-74 Mr-Ap '63.

APPROVED FOR RELEASE: 06/09/2000 CIA-RDP86-00513R000308010018-0"

"APPROVED FOR RELEASE: 06/09/2000 CIA-RDP86-00513R000308010018-0

L 45517-65 EEC(b)-2/EWA(h) Pg-4/Pl-4/Pm-4/Po-4/Pq-4/Pab

ACCESSION NR: AP5014730 RU/0005/64/008/007/0289/0300

AUTHOR: Catuneanu, Vasile M. (Lecturer, Engineer, Candidate of technical sciences)

TITLE: Theoretical principles of the reliability of radio-electronic equipment

SOURCE: Telecomunicatii, v. 8, no. 7, 1964, 289-0300

TOPIC TAGS: electronics, electronic equipment, radio equipment

ABSTRACT: (Author's English summary modified): The principal features of reliability theory are reviewed, and the most common forms of distribution as well as operations involving them are described. A later article is to present numerical examples and show the application of reliability theory to the design of electronic systems. Orig. art. has 16 figures and 77 formulas.

ASSOCIATION: none

SUBMITTED: 00 ENCL: 00 SUB CODE: EC

NO REF SOV: 000 OTHER: 000 JPRS

Card 1/1

APPROVED FOR RELEASE: 06/09/2000 CIA-RDP86-00513R000308010018-0"

"APPROVED FOR RELEASE: 06/09/2000 CIA-RDP86-00513R000308010018-0

CATUNEANU, Vasile, conf. ing., candidat in stiinte tehnice

Reliability computation of the electronic equipment during its elaboration. Telecomunicatii 9 no.1:10-14 Ja '65.

APPROVED FOR RELEASE: 06/09/2000 CIA-RDP86-00513R000308010018-0"

"APPROVED FOR RELEASE: 06/09/2000 CIA-RDP86-00513R000308010018-0

R/005/62/000/004/001/002
D015/D105

9.3200

AUTHOR: Cătuneanu, V.M., Engineer, Candidate of Technical Sciences

TITLE: Considerations on the algebraic theory of switching circuits with magnetic cores

PERIODICAL: Telecomunicatii, no. 4, 1962, 150-158

TEXT: The paper presented at the 2nd national meeting on semi-conductors and their application held in Dec 1961 describes the basic conditions for the integration of the algebraic theory of magnetic-core switching circuits into the theory of non-contact switching circuits. In an attempt to solve this problem the author used deductions by Gr.C.Moisil (Ref. 2: Teoria algebrică a circuitelor cu tranzistoare, partea I /The algebraic theory of transistor circuits Part 1/, Automatica şi Electronica, 5, no. 3, 1961, 101-104). Two main functional systems of magnetic-core switching circuits are described and computed. They refer to non-feedback and feedback circuits. All magnetic-core switching circuits may be combined from two basic circuits, designated as "Circuitul TOT" (ALL circuit) symbolized by T and "circuitul NIMIC" (NOTHING circuit) symbolized

Card 1/3

APPROVED FOR RELEASE: 06/09/2000 CIA-RDP86-00513R000308010018-0"

"APPROVED FOR RELEASE: 06/09/2000 CIA-RDP86-00513R000308010018-0

by N. The non-feedback switching circuits obtained by the combination of these two basic circuits are the OR-circuits, inhibition circuits, inverter circuits based on logic negation and defined by the NOT function, AND-circuits, circuits realizing the first and the second Scheffer functions and EXCLUSIVE-OR circuits. The described feedback circuits are: the AND-circuit using internal feedback, the frequency divider circuit, the inhibition circuit with positive feedback also called TRIGHER DINAMIC (DYNAMIC TRIGGER CIRCUITS) symbolized by TD and TRIGHER DE NUMĂRARE (COUNTING TRIGGER CIRCUITS) symbolized by TN. These basic circuits may easily be established provided that 0 and 1 discrete variables are binary, that is that they refer to the dynamic effect produced by the transference of one magnetization condition into another. The T connecting circuit transfers all that is fed at the input to the output. A circuit leading to a zero output regardless of the input is an N circuit. All magnetic-core logic switching circuits can be obtained by combining the 2 basic circuits shown in Fig. 1 in which (1a) represents a magnetic core in the shape of a horizontal bar with a rectangular hysteresis loop. The article shows that T and N circuits can be used to obtain conventional switching circuits, and establishes the corresponding Boolean algebraic equations. Analysis and synthesis of magnetic-

APPROVED FOR RELEASE: 06/09/2000 CIA-RDP86-00513R000308010018-0"

"APPROVED FOR RELEASE: 06/09/2000 CIA-RDP86-00513R000308010018-0

core switching circuits can be based on the above considerations. There are 15 figures and 3 tables. The English-language reference reads as follows: M.Karnaugh: Pulse switching circuits using magnetic cores, Proc. IRE, 43, no. 5 (May), 1955, 570-584.

PRESENTED: December, 1961

APPROVED FOR RELEASE: 06/09/2000 CIA-RDP86-00513R000308010018-0"

"APPROVED FOR RELEASE: 06/09/2000 CIA-RDP86-00513R000308010018-0

41990
R/005/62/000/005/001/001
D014/D105

97100

AUTHOR: Cătuneanu, V.M., Engineer, Candidate of Technical Sciences

TITLE: New arrangements of magnetic-core switching circuits

PERIODICAL: Telecomunicații, no. 5, 1962, 193 - 198

TEXT: The article presents a magnetic-core bistable dynamic trigger, two new counting triggers, i.e. a multiple-control counting trigger and a power counting trigger, as well as a new frequency divider. The bistable dynamic trigger, TD-2, has two inputs, A and B, and two outputs, W_1 and W_2, and consists of four cores. Cores I and III form the elementary T-type circuits and cores II and IV the N-type circuits. By combining the functions of cores I and IV, as well as those of cores II and III in one core each, a trigger arrangement with two magnetic cores, shown in Fig. 2, is obtained. Experiments were conducted with this arrangement by using beat impulses with an amplitude of 4 amp, a period of 7 μsec, a front of 1.5 μsec and a frequency of 2 kcps, producing at the output, impulses with an amplitude of 18 ma. In some cases it is necessary to set the motion, or block the dynamic trigger part, without affecting the inhibiting part

Card 1/4

APPROVED FOR RELEASE: 06/09/2000 CIA-RDP86-00513R000308010018-0"

"APPROVED FOR RELEASE: 06/09/2000 CIA-RDP86-00513R000308010018-0

of the counting trigger. The arrangement of such a multiple-control counting trigger, TN-M, is shown in Fig. 4. The signals obtained experimentally at the output of this arrangement are stable but have a low amplitude ranging between 10 and 12 ma. In certain cases, however, it is necessary to have at both outputs of the counting trigger signals with a high amplitude, in order to switch 2 - 3 cores under load on every output. The arrangement of the power counting trigger, TN-P, which may achieve this, is shown in Fig. 8. This power counting trigger achieved output signals of double amplitude as compared with usual counting triggers. The new frequency divider, DF-n, is based on the operation of the NICI function, Sheffer's first function, with negative reaction. This 1:n frequency divider, shown in Fig. 12, proved that no additional measurements, such as those required by the ring-type frequency dividers with positive reaction are necessary. There are 13 figures and 3 tables. The English-language reference reads as follows: V. L. Newhause and N. S. Prywes: High speed shift register using one core per bit; IRE Transactions on EC, Sept. 1956.

APPROVED FOR RELEASE: 06/09/2000 CIA-RDP86-00513R000308010018-0"

"APPROVED FOR RELEASE: 06/09/2000 CIA-RDP86-00513R000308010018-0

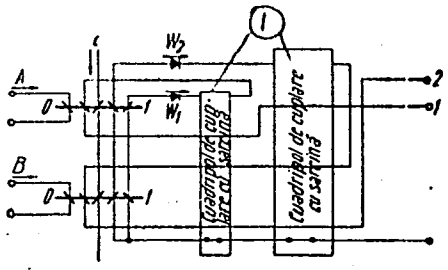

Fig. 2. Arrangement of the bistable dynamic trigger (TD-2) with two magnetic cores.

Legend: (1) Quadrupole for coupling with the load

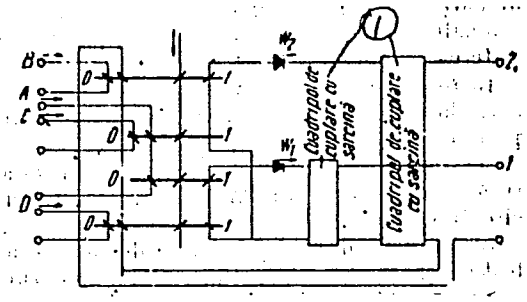

Fig. 4. Arrangement of the multiple-control counting trigger (TN-M)

Legend: (1) Quadrupole for coupling with the load

APPROVED FOR RELEASE: 06/09/2000 CIA-RDP86-00513R000308010018-0"

"APPROVED FOR RELEASE: 06/09/2000 CIA-RDP86-00513R000308010018-0

New arrangements of magnetic-core .....

R/005/62/000/005/001/001
D014/D105

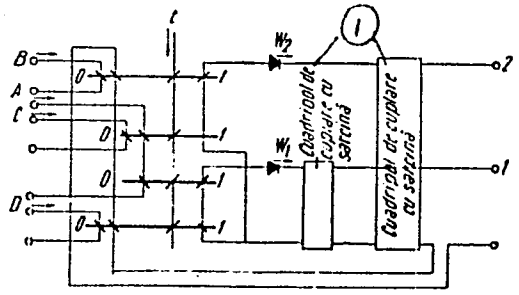

Fig. 8. Arrangement of the power counting trigger (TN-P)

Legend: (1) Quadrupole for coupling with the load

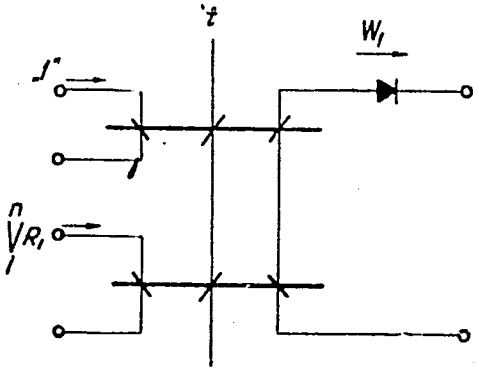

Fig. 12. New arrangement of the frequency divider, which realizes the NICI function

Card 4/4

APPROVED FOR RELEASE: 06/09/2000 CIA-RDP86-00513R000308010018-0"

"APPROVED FOR RELEASE: 06/09/2000 CIA-RDP86-00513R000308010018-0

ALEXIU, I., ing.; BALANESCU, C., ing.; CATUNEANU, V., ing. candidat in stiinte tehnice; DANILIUC, N., ing.; RUSU, N., ing.

Elementary commutation circuits with magnetic cores. Telecomunicatii 7 no.1:12-18 Ja-F '63.

APPROVED FOR RELEASE: 06/09/2000 CIA-RDP86-00513R000308010018-0"

"APPROVED FOR RELEASE: 06/09/2000 CIA-RDP86-00513R000308010018-0

CATUNEANU, Vasile M., conf., ing., candidat in stiinte tehnice

Problem of production tolerances and errors, in the theory of the radio-electronic apparatus safety of operation. Telecomunicatii 7 no.3:100-110 My-Je '63.

APPROVED FOR RELEASE: 06/09/2000 CIA-RDP86-00513R000308010018-0"

"APPROVED FOR RELEASE: 06/09/2000 CIA-RDP86-00513R000308010018-0

BALANESCU, Ciprian, ing.; CATUNEANU, Vasile, M., conf.ing., candidat in stiinte tehnice.

Equipment for selecting cores of ferrite in operating conditions and for testing commutation magnetic circuits. Telecomunicatii 7 no.5:199-205 S-O'63

APPROVED FOR RELEASE: 06/09/2000 CIA-RDP86-00513R000308010018-0"

"APPROVED FOR RELEASE: 06/09/2000 CIA-RDP86-00513R000308010018-0

L 15510-65 EEC(b)-2/EWA(h) Pg-4/Pl-4/Pm-4/Po-4/Pq-4/Peb

ACCESSION NR: AP5014667 RU/0005/64/008/008/0327/0333

AUTHOR: Catuneanu, V. M. (Lecture, Engineer, Candidate of technical sciences)

TITLE: Theoretical basis of the reliability of radioelectronic equipment

SOURCE: Telecomunicatii, v. 8, no. 8, 1964, 327-333

TOPIC TAGS: radio equipment, electronic component

ABSTRACT: This is the second part of a two-part paper. Topics covered include estimating the reliability of systems and components in terms of their age, the calculation of tolerances, and the assurance of reliability by redundancy methods. Orig. art. has 2 figures, 41 formulas, and 4 graphs.

ASSOCIATION: none

SUBMITTED: 00 ENCL: 00 SUB CODE: EC

NO REF SOV: 007 OTHER: 015 JPRS

Card 1/1

APPROVED FOR RELEASE: 06/09/2000 CIA-RDP86-00513R000308010018-0"

"APPROVED FOR RELEASE: 06/09/2000 CIA-RDP86-00513R000308010018-0

L 30931-66 TG

ACC NR: AP6023184 SOURCE CODE: RU/0005/65/009/001/0010/0014

AUTHOR: Catuneanu, V. (Engineer; Lecturer; Candidate of technical sciences)

ORG: none

TITLE: Computation of the reliability of electronic equipment in the design stage

SOURCE: Telecomunicatii, v. 9, no. 1, 1965, 10-14

TOPIC TAGS: reliability theory, electronic equipment, calculation

ABSTRACT: The article presents the premises and the method for calculating the reliability of electronic equipment while it is still in design. The method comprises three stages of computation: orientative, preliminary, and final. Orig. art. has: 9 figures and 8 formulas. [JPRS]

SUB CODE: 09 / SUBM DATE: none

Card 1/1 CC 0915 1295

APPROVED FOR RELEASE: 06/09/2000 CIA-RDP86-00513R000308010018-0"

"APPROVED FOR RELEASE: 06/09/2000 CIA-RDP86-00513R000308010018-0

CATZ, I.; SEEWALDT, R.

A release device in the coiler of cotton cards. p. 27.

INDUSTRIA TEXTILA. (Asociatia Stiintifica a Inginerilor si Technicienilor din Rominia si Ministerului Industriei Usoare) Bucuresti, Rumania. Vol. 10, no. 1, Jan, 1959.

Monthly List of East European Accessions (EEAI) LC, Vol. 8, No. 6, June 1959. UNCL.

APPROVED FOR RELEASE: 06/09/2000 CIA-RDP86-00513R000308010018-0"

"APPROVED FOR RELEASE: 06/09/2000 CIA-RDP86-00513R000308010018-0

CATZ, I., ing.; SEEWALDT, R., ing.

Protecting devices for main transmissions in the cotton carding machine. Ind text Rum 12 no.3:113-114 Mr '61.

1. Institutul de cercetari stiintifice pentru protectia muncii, Consiliul Central al Sindicatelor.

APPROVED FOR RELEASE: 06/09/2000 CIA-RDP86-00513R000308010018-0"

"APPROVED FOR RELEASE: 06/09/2000 CIA-RDP86-00513R000308010018-0

CATZ, Iosef

A device for the protection of wire winding machines. Metalurgia constr mas 8 no.11:1012-1013 N '61.

(Winding machines) (Wire rope)

APPROVED FOR RELEASE: 06/09/2000 CIA-RDP86-00513R000308010018-0"

"APPROVED FOR RELEASE: 06/09/2000 CIA-RDP86-00513R000308010018-0

CATZ, Iosef, ing.

Considerations concerning the location of machine tools in the mechanical shops of enterprises. Industria usoara 9 no.6:223-225 Je '62.

APPROVED FOR RELEASE: 06/09/2000 CIA-RDP86-00513R000308010018-0"

"APPROVED FOR RELEASE: 06/09/2000 CIA-RDP86-00513R000308010018-0

CATZ, I., ing.

Pneumatic transport as a means of improving the working conditions by eliminating manual operations and preventing professional diseases assoviated with cereal handling. Ind alim veget 13 no.4:115-118 Ap '62.

1. Institutul de cercetari stiintifice pentru protectia muncii, C.C.S.

APPROVED FOR RELEASE: 06/09/2000 CIA-RDP86-00513R000308010018-0"

"APPROVED FOR RELEASE: 06/09/2000 CIA-RDP86-00513R000308010018-0

CATZ, I., ing.; SEEWALDT, R., ing.

Coupling of steel cables and protection of their ends against disconnection. Rev transport 9 no.9:401-403 S '62.

APPROVED FOR RELEASE: 06/09/2000 CIA-RDP86-00513R000308010018-0"

"APPROVED FOR RELEASE: 06/09/2000 CIA-RDP86-00513R000308010018-0

CATZ, Iosif, ing.

Causes of the breaking of abrasive stones and measures to be taken to avoid and prevent accidents in maintenance workshops. Industria usoara 9 no.10:443-447 O '62.

APPROVED FOR RELEASE: 06/09/2000 CIA-RDP86-00513R000308010018-0"

"APPROVED FOR RELEASE: 06/09/2000 CIA-RDP86-00513R000308010018-0

CATZ, Iosef, ing.

Labor safety requirements on building control cabins for traveling cranes. Constr mas 15 no.6:455-458 Je '63.

1. Institutul de igiena si protectia muncii.

APPROVED FOR RELEASE: 06/09/2000 CIA-RDP86-00513R000308010018-0"

"APPROVED FOR RELEASE: 06/09/2000 CIA-RDP86-00513R000308010018-0

CATZ, Iosef, ing.

Some directions on labor security in the engineering workshops of the enterprises of the Ministry of Transport and Telecommunication. Rev transport 10 no. 11: 522-527 N '63.

APPROVED FOR RELEASE: 06/09/2000 CIA-RDP86-00513R000308010018-0"

"APPROVED FOR RELEASE: 06/09/2000 CIA-RDP86-00513R000308010018-0

SEEWALDT, R., ing.; CATZ, I., ing.

Directions of safety technics regarding the construction of general use machines for processing wood. Inc lemului 15 no.11:439-441 N '64.

APPROVED FOR RELEASE: 06/09/2000 CIA-RDP86-00513R000308010018-0"

"APPROVED FOR RELEASE: 06/09/2000 CIA-RDP86-00513R000308010018-0

PODJEVIN, Pavel, ing.; CATZ, Iosef, ing.

Device for limiting the maximum load in roller bridges. Metalurgia constr mas 14 no.5:444-446 My '62.

1. Institutul de cercetari stiintifice pentru protectia muncii C.C.S.

APPROVED FOR RELEASE: 06/09/2000 CIA-RDP86-00513R000308010018-0"

"APPROVED FOR RELEASE: 06/09/2000 CIA-RDP86-00513R000308010018-0

CAUCAWAR, STANISLAW

TREBICKA-KWIATKOWSKA, Bara; CAUCAWAR, Stanislaw

Placenta increte causing spontaneous rupture of uterus. Gin. polska 28 no.4:469-481 July-Aug 57.

1. Z I KLINIK Poloznictwa i Chorob Kobiecych A. M. w Lublinie. Kierownik: prof. dr S. Liebhart i z Zakladu Anatomii Patologicznej A. M. W Lublini Kierownik: prof. dr S. Mahrburg. Adres: Dr B. Trebicka-Kwiatkowska, Lublin, Szopena 12 m. 5.

(PLACENTA
increta causing rupt. of uterus (Pol))
(UTERUS, rupt.
caused by placenta increta (Pol))

APPROVED FOR RELEASE: 06/09/2000 CIA-RDP86-00513R000308010018-0"

"APPROVED FOR RELEASE: 06/09/2000 CIA-RDP86-00513R000308010018-0

CAUGHEY, R.

Welding tubes of austenitic steel at a high temperature, p. 270, ZVARANIE, (Ministerstvo hutneho prumyslu a rudnych bani a Ministerstvo strojarstvo) Baratislava, Vol. 3, No. 8/9, Sept. 1954

SOURCE: East European Accessions List (EEAL) Library of Congress, Vol. 4, No. 12, December 1955

APPROVED FOR RELEASE: 06/09/2000 CIA-RDP86-00513R000308010018-0"

"APPROVED FOR RELEASE: 06/09/2000 CIA-RDP86-00513R000308010018-0

CAUSEVIC, Kemal, ing.

Industry of paints, varnishes and pigments. Alm hem ind. 122-127 '56.

APPROVED FOR RELEASE: 06/09/2000 CIA-RDP86-00513R000308010018-0"

"APPROVED FOR RELEASE: 06/09/2000 CIA-RDP86-00513R000308010018-0

II

COUNTRY : YUGOSLAVIA
CATEGORY : Chemical Technology. Chemical Products and Their Applications. Chemical Wood Products. Hydrolysis*

ABS. JOUR. : RZhKhim., No 17, 1959, No. 62334

AUTHOR : Causevic, K.
INSTITUTE : -
TITLE : Requirements of New Capacities for Dry Distillation of Wood.

ORIG. PUB. : Kemija u industriji, 1958, 7, No 8, 203-208

ABSTRACT : The Yugoslavian economic reconstruction plan for 1957-1961 includes expansion of the manufacturing facilities for dry distillation products assigned for incressing export and utilization of wood by-products. The planned expansion includes the construction of several pyrolysis plants with the total capacity up to 200,000 m³ of wood pulp per year.

*Industry.

Card: 1/1

H - 09

APPROVED FOR RELEASE: 06/09/2000 CIA-RDP86-00513R000308010018-0"

"APPROVED FOR RELEASE: 06/09/2000 CIA-RDP86-00513R000308010018-0

CAUSEVIC, K.

Shall we construct new dry-wood distillation plants? II. p. 79.

KEMIJA U INDUSTRIJI. (Drustvo kemicara-tehnologa NRH)
Zagreb, Yugoslavia
Vol. 8, no. 3, Mar. 1959

Monthly list of Eastern European Accession Index (EEAI) LC vol. 8, No. 11
November 1959
Uncl.

APPROVED FOR RELEASE: 06/09/2000 CIA-RDP86-00513R000308010018-0"

"APPROVED FOR RELEASE: 06/09/2000 CIA-RDP86-00513R000308010018-0

CAUSIC, J.

MARIC-GVOZDENOVIC, Julija, asistent dr. Djecije klinike; CAUSIC, Jelena, dr. Djecije klinike

Infant septicemia caused by Staphylococcus aureus and Bacillus pyocyaneus. Med. arh., Sarajevo 8 no.4:62-73 July-Aug 54.

1. Univerzitetska Djecija klinika. Upravnik Prof. Dr. Milivoje Sarvan.

(SEPTICEMIA AND BACTEREMIA, bacteriol.
Micrococcus pyogenes aureus & Pseudomonas aeruginosa in inf.)
(PSEUDOMONAS AERUGINOSA, infect.
septicemia in inf.)
(MICROCOCCUS PYOGENES, infect.
aureus septicemia in inf.)

APPROVED FOR RELEASE: 06/09/2000 CIA-RDP86-00513R000308010018-0"

"APPROVED FOR RELEASE: 06/09/2000 CIA-RDP86-00513R000308010018-0

CAUTES, A.

Adaptation of the Vasile Roaita threshing machine for shelling corn.

p. 4. TEHNICA NOUA. (Asociatia Stiintifica a Inginerilor si Tehnicienilor) Bucuresti. Vol. 3, No. 36, Feb. 1956.

So. East European Accessions List Vol. 5, No. 9 September, 1956

APPROVED FOR RELEASE: 06/09/2000 CIA-RDP86-00513R000308010018-0"

"APPROVED FOR RELEASE: 06/09/2000 CIA-RDP86-00513R000308010018-0

CAUTIS, I.

Biology of the sprat Sprattus sprattus phalericus (Risso) along the Rumanian littoral. p. 141.

HIDROBIOLOGIA. (Academia Republici Populare Romine. Comisie de Hidrologie, Hidrobiologie si Ihtiologie) Bucuresti, Rumania. Vol. 1, 1958.

Monthly list of East European Accessions (EEAI) LC, Vol. 8, no. 8, Aug. 1959

Uncl.

APPROVED FOR RELEASE: 06/09/2000 CIA-RDP86-00513R000308010018-0"

"APPROVED FOR RELEASE: 06/09/2000 CIA-RDP86-00513R000308010018-0

CAVADIA, I.; MEILTZ, G.; MOLDOVAN, N.; VAIDA, D.; ZAMFIRESCU, I.

Programming with the aid of calculation logical schemes.
Gaz mat fiz 14 no.7:337-350 Jl '62.

1. Institutul de Fizica Atomica.

APPROVED FOR RELEASE: 06/09/2000 CIA-RDP86-00513R000308010018-0"

"APPROVED FOR RELEASE: 06/09/2000 CIA-RDP86-00513R000308010018-0

ITO, Sukemitu; HONDA, Kozo; ISHIYAMA, Kikuzo; CAVAR, Mirko, student [translator] (Zagreb)

Wearing out of welded carbonic steel. Zavarivanje 4 no.5/6: 103-108 My-Je '61.

1. Visoka tehnicka skola u Zagrebu, Zagreb (for Cavar).

APPROVED FOR RELEASE: 06/09/2000 CIA-RDP86-00513R000308010018-0"

"APPROVED FOR RELEASE: 06/09/2000 CIA-RDP86-00513R000308010018-0

SCHEJTANOW, Ch. [Sheitanov, Kh.]; KONSTANTINOVA, M.; CAVDAROVA, R. [Chavdarova, R.]

Automatic microcoulometric titration of bases. Doklady BAN 17 no. 8:721-724 '64.

1. Vorgelegt von Akademiemitglied D.Ivanov.

APPROVED FOR RELEASE: 06/09/2000 CIA-RDP86-00513R000308010018-0"

"APPROVED FOR RELEASE: 06/09/2000 CIA-RDP86-00513R000308010018-0

CAVIC, S.

Problems of power supplies for telegraphic apparatus. p. 11. (TELEKOMUNIKACIJE, Vol. 3, no. 3, July 1954. Beograd, Yugoslavia)

SO: Monthly List of East European Accessions, (EEAL), LC, Vol. 4, No. 4, Apr 1955, Uncl.

APPROVED FOR RELEASE: 06/09/2000 CIA-RDP86-00513R000308010018-0"

"APPROVED FOR RELEASE: 06/09/2000 CIA-RDP86-00513R000308010018-0

CAVIC, B.

Amplitude and frequency modulation in telegraphy. p. 33. (BEOGRAD Vol 4, No. 1, Jan 1955.)

SO: Monthly list of East European Accessions. (EEAL, LC, Vol 4, No. 6, June 1955, Uncl.

APPROVED FOR RELEASE: 06/09/2000 CIA-RDP86-00513R000308010018-0"

"APPROVED FOR RELEASE: 06/09/2000 CIA-RDP86-00513R000308010018-0

CAVIC, B.

CAVIC, B. Ways of telegraph development. p. 6

Vol. 5, no. 3, Aug. 1956
TELEKOMUNIKACIJE
TECHNOLOGY
Beograd

So: East European Accession, Vol. 6, no. 3, March 1957

APPROVED FOR RELEASE: 06/09/2000 CIA-RDP86-00513R000308010018-0"

"APPROVED FOR RELEASE: 06/09/2000 CIA-RDP86-00513R000308010018-0

YUGOSLAVIA/Electronics - Photocells and Semiconductor Devices H-8

Abs Jour : Ref Zhur - Fizika, No 8, 1958, No 18475

Author : Cavic B.N.
Inst : Not Given
Title : Transistors or Vacuum Tubes

Orig Pub : Telekomunikasije, 1957, 6, No 1, 16-20

Abstract : A comparison is given of the characteristic properties of transistors and vacuum tubes (with allowance for the possibility of their manufacture and use). When considering the electric properties of these elements, a comparison is made of their equivalent circuits and characteristics ($I_g = f(U_g)$ of a pentode with $U_c = f(I_c)$ of the junction transistor), and also connection diagrams for grounded cathode, anode, and grid (for tube) and emitter, collector, and base (for transistor). It is assumed here that the functions of the corresponding electrodes of the vacuum tube (pentode) and transistor are equivalent. A comparison is made of the technical data (service life, effective temperature and frequency, dimensions, etc).

Card : 1/1

APPROVED FOR RELEASE: 06/09/2000 CIA-RDP86-00513R000308010018-0"

"APPROVED FOR RELEASE: 06/09/2000 CIA-RDP86-00513R000308010018-0

L 16846-66 EWT(m)/T DJ

ACC NR: AM6006727 Monograph UR/ 39 36 B+1

Lavisha, Vladimir Vladimirovich

Hydraulic steering machines (Gidravlicheskiye rulevyye mashiny) Moscow, Izd-vo "Transport", 65. 0223 p. illus., biblio. 3,500 copies printed.

TOPIC TAGS: hydraulic engineering, shipbuilding engineering, mechanical stress, hydraulic device, performance test, engine turbine system

PURPOSE AND COVERAGE: This book represents the original work in which, for the first time, the analysis of different types of hydraulic steering machines and their basic parts are described. The results of their tests, size and overall characteristic are described - which allow to determine the course of future perspective in the development of hydraulic steering machines. The solution of some theoretical problems has a practical use - connected with the exploitation of hydraulic steering machines in storm conditions and in their more higher useage. An important interest lies in the test and instructions how to operate hydraulic steering machines. This book is recommended to the wide circle of crew, engineers and technicians in shipbuilding industry, for students, and teachers of higher educational institutes of the Merchant Marine.

TABLE OF CONTENTS (abridged):

Introduction --3
Ch. I. The principles of design and use of hydraulic steering machines; the survey

Card 1/2 UDC: 656.612:621.22

APPROVED FOR RELEASE: 06/09/2000 CIA-RDP86-00513R000308010018-0"

"APPROVED FOR RELEASE: 06/09/2000 CIA-RDP86-00513R000308010018-0

L 16846-66

ACC NR: AM6006727

and analysis of their different types --9
Ch. II. Methods of determination of efficient output of hydraulic gears and machines and their examples --148
Ch. III. The work of hydraulic steering machines on small angles and on straight course. The expenditure of energy and fuel --179
Ch. IV. The overall weight, dimension and parameters of hydraulic steering machines --190
Ch. V. The stress on hydraulic steering machines and on hydraulic rudder --194
Ch. VI. The tests of hydraulic steering machines --208
Bibliography --222

SUB CODE: 13 / SUBM DATE: 20Oct65/ ORIG REF: 010/ OTH REF: 004

APPROVED FOR RELEASE: 06/09/2000 CIA-RDP86-00513R000308010018-0"

"APPROVED FOR RELEASE: 06/09/2000 CIA-RDP86-00513R000308010018-0

CECUK, Ljubomir, dr.; CAVKA, Tomislav, dr.

Familial polyposis of the small intestine with the appearance of spots on the lips and oral mucosa - Peutz syndrome. Lijec. vjes. 81 no.11:847-854 '59.

1. Iz Kirurske klinike Medicinskog fakulteta u Zagrebu i Opce bolnice u Kninu.
(POLYPI case reports)

APPROVED FOR RELEASE: 06/09/2000 CIA-RDP86-00513R000308010018-0"

"APPROVED FOR RELEASE: 06/09/2000 CIA-RDP86-00513R000308010018-0

CAVKA, Vladimir

To professor dr. Pavle Kaunic on his 70th birthday. Med. arh. Sarajevo 8 no.2:1-2 Mar-Apr 54.
(BIOGRAPHIES
Kaunic, Pavle)

APPROVED FOR RELEASE: 06/09/2000 CIA-RDP86-00513R000308010018-0"

"APPROVED FOR RELEASE: 06/09/2000 CIA-RDP86-00513R000308010018-0

CAVKA, V., prof. dr., Sarajevo

Study on ophthalmoneurological symptoms following prefrontal lobotomy or lobectomy. Med. arh., Sarajevo 8 no.5:25-31 Sept-Oct 54.

(PSYCHOSURGERY,
lobotomy, prefrontal, ophthalmoneurol, compl.)
(FRONTAL LOBE, surg.
lobectomy, prefrontal, ophthalmoneurol. compl.)
(EYE, dis.
neurol. symptoms after prefrontal lobotomy & lobectomy)

APPROVED FOR RELEASE: 06/09/2000 CIA-RDP86-00513R000308010018-0"

"APPROVED FOR RELEASE: 06/09/2000 CIA-RDP86-00513R000308010018-0

CAVKA, V., Dr.

Importance of the neurovegetative centers of the brain in the development of primary glaucoma. Med. arh., Sarajevo 8 no.6: 1-10 Nov-Dec 54.

(GLAUCOMA, physiology,
autonomic NS, pathogen. role (Ser))
(AUTONOMIC NERVOUS SYSTEM, in various diseases,
glaucoma, pathogen. role (Ser))

APPROVED FOR RELEASE: 06/09/2000 CIA-RDP86-00513R000308010018-0"

"APPROVED FOR RELEASE: 06/09/2000 CIA-RDP86-00513R000308010018-0

CAVKA, V., Dr., Sarajevo

New personal method of surgery for total ankylosymblepharon of the eyes. Med. arh., Sarajevo 9 no.3:159-165 May-June 55.

(CONJUNCTIVA, dis.
ankylosymblepharon, surg. (Ser))

APPROVED FOR RELEASE: 06/09/2000 CIA-RDP86-00513R000308010018-0"

"APPROVED FOR RELEASE: 06/09/2000 CIA-RDP86-00513R000308010018-0

CAVKA, V., Dr., Sarajevo

Cerebral changes in primary glaucoma. Med. arh., Sarajevo 9 no. 3:167-173 May-June 55.

(GLAUCOMA, compl.
brain changes in primary glaucoma, EEG. (Ser))
(BRAIN, pathol.
brain changes in primary glaucoma, EEG. (Ser))

APPROVED FOR RELEASE: 06/09/2000 CIA-RDP86-00513R000308010018-0"

"APPROVED FOR RELEASE: 06/09/2000 CIA-RDP86-00513R000308010018-0

CAVKA, V., Dr., Sarajevo

Primary massive corneal dystrophy from the point of view of keratoplasty. Med. arch., Sarajevo 9 no.4:187-196 July-Aug 55.

(CORNEA, dis.
dystrophy, massive primary, familial, surg., keratoplasty. (Ser))
(HEREDITY,
of corneal massive primary dystrophy, surg., keratoplasty. (Ser))
(CORNEAL TRANSPLANTATION,
keratoplasty for hered. primary massive corneal dystrophy. (Ser))

APPROVED FOR RELEASE: 06/09/2000 CIA-RDP86-00513R000308010018-0"

"APPROVED FOR RELEASE: 06/09/2000 CIA-RDP86-00513R000308010018-0

CAVKA, V., Dr., Sarajevo

Crain changes in Coat's exudative retinitis. Med. arch., Sarajevo 9 no.4:197-202 July-Aug 55.

(RETINITIS,
exudative, with hydrocephalus & brain atrophy, etiol. (Ser))
(HYDROCEPHALUS, compl.
exudative retinitis & brain atrophy, etiol. (Ser))
(BRAIN, dis.
atrophy, with hydrocephalus & exudative retinitis, etiol. (Ser))
(ATROPHY,
brain, with hydrocephalus & exudative retinitis, etiol. (Ser))

APPROVED FOR RELEASE: 06/09/2000 CIA-RDP86-00513R000308010018-0"

"APPROVED FOR RELEASE: 06/09/2000 CIA-RDP86-00513R000308010018-0

CAVKA, V.; BOGOJEVIC, D.; CURKCVIC, E.

Action for control of trachoma in the People's Republic of Bosnia and Herzegovina. Med. arch., Sarajevo 9 no.4:203-217 July-Aug 55.

1. Ocna klinika Med. fak. u Sarajevu. (Sef: prof. dr. V. Cavka).
(TRACHOMA, prev. & control
in Yugosl., statist. (Ser))

APPROVED FOR RELEASE: 06/09/2000 CIA-RDP86-00513R000308010018-0"

"APPROVED FOR RELEASE: 06/09/2000 CIA-RDP86-00513R000308010018-0

CAVKA, V., Dr.

Personal method of lens transplantation and implantation of acrylic resins. Med. arh., Sarajevo 9 no.5:139-144 Sept-Oct 55.

(CRYSTALLINE LENS, surg.
implantation of acrylic resins in rabbits. (Ser))
(ACRYLIC RESINS,
acrylic lens implants in rabbits. (Ser))

APPROVED FOR RELEASE: 06/09/2000 CIA-RDP86-00513R000308010018-0"

"APPROVED FOR RELEASE: 06/09/2000 CIA-RDP86-00513R000308010018-0

CAVKA, V., Dr., Sarajevo

New etiology of orbital cellulitis in children. Med. arh., Sarajevo 9 no.5:145-154 Sept-Oct 55.

(CELLULITIS,
orbital in child., epidemic caused by viral infect. (Ser))
(VIRUS DISEASES,
infect. causing epidemic of orbital cellulitis in child. (Ser))

APPROVED FOR RELEASE: 06/09/2000 CIA-RDP86-00513R000308010018-0"

"APPROVED FOR RELEASE: 06/09/2000 CIA-RDP86-00513R000308010018-0

CAVKA, V., Prof., dr., Sarajevo

Modification of Hess' operation. Med. arh., Sarajevo 9 no.6: 81-84 Nov-Dec 55.

(EYELIDS, dis.
ptosis, surg., modified Hess' operation. (Ser))

APPROVED FOR RELEASE: 06/09/2000 CIA-RDP86-00513R000308010018-0"

"APPROVED FOR RELEASE: 06/09/2000 CIA-RDP86-00513R000308010018-0

CAVKA, V., Prof., Dr., Sarajevo

Unusual congenital refractive error with compensatory monoocular motility. Med. arh., Sarajevo 9 no.6:85-89 Nov-Dec 55.

(REFRACTIVE ERRORS,
congen., monoocular, with motality disord. (Ser))
(EYE, physiol.
motility disord, with congen. monoocular refractive error. (Ser))

APPROVED FOR RELEASE: 06/09/2000 CIA-RDP86-00513R000308010018-0"

"APPROVED FOR RELEASE: 06/09/2000 CIA-RDP86-00513R000308010018-0

CAVKA, V., Prof., dr., Sarajevo

Keratoglobus after total keratoplasty. Med. arh., Sarajevo 9 no.6:91-96 Nov-Dec 55.

(CORNEA, dis.
megalocornea, caused by total keratoplasty. (Ser))
(CORNEAL TRANSPLANTATION,
keratoplasty, causing megalocornea. (Ser))

APPROVED FOR RELEASE: 06/09/2000 CIA-RDP86-00513R000308010018-0"

"APPROVED FOR RELEASE: 06/09/2000 CIA-RDP86-00513R000308010018-0

CAVKA, V., prof. dr.; BARONIJAN, J., dr.

Use of alpha-chymotrypsin-A "zolulase" in cataract surgery.
Med. glasn. 13 no.5:321-325 My '59.

1. Oftalmoloska klinika Medicinskog fakulteta u Beogradu, upravnik: prof. dr. V. Cavka.
(CATARACT EXTRACTION)
(CHYMOTRYPSINS ther.)

APPROVED FOR RELEASE: 06/09/2000 CIA-RDP86-00513R000308010018-0"

"APPROVED FOR RELEASE: 06/09/2000 CIA-RDP86-00513R000308010018-0

CAVKA, V., prof. d-r

On central regulation of intraoculare pressure. Med. arh., Sarajevo 13 no.5:1-6 S-O '59.

1. Ocna klinika Medicinskog fakulteta u Beogradu, sef: prof. d-r V. Cavka.
(INTRAOVULAR PRESSURE physiol.)
(BRAIN physiol.)

APPROVED FOR RELEASE: 06/09/2000 CIA-RDP86-00513R000308010018-0"

"APPROVED FOR RELEASE: 06/09/2000 CIA-RDP86-00513R000308010018-0

CAVKA, V.; BOGOJEVIC, D.

On fronto-orbital centers and their role in neuro-ophthalmological symptoms and ocular pressure changes. Neuropsihijatrija 9 no.1:1-11 '61.

1. Ocna klinika Medicinskog fakulteta u Beogradu (Upravnik: Prof. dr. V. Cavka).

(FRONTAL LOBE dis) (OPTIC NERVE dis)
(INTRAOCULAR PRESSURE)

APPROVED FOR RELEASE: 06/09/2000 CIA-RDP86-00513R000308010018-0"

"APPROVED FOR RELEASE: 06/09/2000 CIA-RDP86-00513R000308010018-0

CAVKA, VLADIMIR

(9)

Sarajevo, Život i Zdravlje, Vol 1[illegible], No 1[illegible], Dec 61

1. "Trachoma" Prof Dr Vladimir CAVKA; pp 1-6.
2. "Inheritance of Human Characteristics" Prof Dr Milutin [illegible]; pp 7-8.
3. "Tourism and Sanitary Inspection" Primarius Dr Mica [illegible]; pp 8-11.
4. "Blood Transfusions - An Important Matter for All of Us" Milan [illegible]; pp 11-15.
5. "Cephalea Neurotica - Neurotic Headache" Dr Ivan [illegible]; pp 16-18.
6. "Antibiotics" Dr Novica SPAHIC; pp 18-21.
7. "Men in White on the Vlasic Mountain in 1934" Dr Lovro [illegible]; pp 21-26.
8. "Are you About to Travel to a Tropical Country? How to Protect Your Health While There" Dr [illegible]; pp 26-29.
9. "Pertussis" Dr [illegible]; pp 30-32.

— 1/1 —

APPROVED FOR RELEASE: 06/09/2000 CIA-RDP86-00513R000308010018-0"

"APPROVED FOR RELEASE: 06/09/2000 CIA-RDP86-00513R000308010018-0

CAVKA, VLADIMIR

(8)

Sarajevo, Zivot i Zdravlje, Vol 15, No 4, Apr 61

1. "Accidents are Preventable" Prof Dr Grujica ZARKOVIC pp 1-4.

2. "Frequent Diseases of Throat, Nose and Ear in Children. Tonsillitis" Prof Dr Zarko PRASCALO; pp 4-9.

3. "Malnutrition and Mortality, Morbidity and Health of Population" Prof Dr Miroslav RADOVANOVIC, pp 10-13.

4. "Facial Acne" Primarius Dr Veljko KNEZEVIC, pp 13-17.

5. "Eye Lesions from UV and IR Radiation" Prof Dr Vladimir CAVKA; pp 18-22.

6. "Cocoa and Chocolate - Useful and Necessary Food Items" Primarius Dr Sergije STANIJEVIC; pp 22-24.

7. "Viral Jaundice - an Extremely Frequent Disease in Our Country" Prof Dr Jakob GACH; pp 25-27.

8. "Flat Feet" Dr Petar DUJANOVIC; pp 28-30.

9. "Nicotine - an Enemy of the Blood Vessels" Dr; pp31-32.

— 1/1 —

APPROVED FOR RELEASE: 06/09/2000 CIA-RDP86-00513R000308010018-0"

"APPROVED FOR RELEASE: 06/09/2000 CIA-RDP86-00513R000308010018-0

CAVKA, V., prof., dr. (Sarajevo)

On a new clinical syndrome of pigmented glaucoma with heterochromic iris. Med. arh. 16 no.2:1-12 '62.

(GLAUCOMA case reports)
(IRIS dis)
(PIGMENTATION DISORDERS)

S

APPROVED FOR RELEASE: 06/09/2000 CIA-RDP86-00513R000308010018-0"

"APPROVED FOR RELEASE: 06/09/2000 CIA-RDP86-00513R000308010018-0

CAVKA, V.; DZODZO-KUKOC, R.

On the operative therapy of keratoconus after Sato; modification after Cavka. Bul sc Youg 7 no.3:68 Je '62.

1. Ocna klinika Medicinskog fakulteta, Sarajevo.

APPROVED FOR RELEASE: 06/09/2000 CIA-RDP86-00513R000308010018-0"

"APPROVED FOR RELEASE: 06/09/2000 CIA-RDP86-00513R000308010018-0

CAVLINA, C.

"Electrification of the Rijeka-Zagreb railroad route."

p. 266 (Energija) Vol. 6, no. 9/10, Sept./Oct. 1957
Zagreb, Yugoslavia

SO: Monthly Index of East European Accessions (EEAI) LC. Vol. 7, no. 4, April 1958

APPROVED FOR RELEASE: 06/09/2000 CIA-RDP86-00513R000308010018-0"

"APPROVED FOR RELEASE: 06/09/2000 CIA-RDP86-00513R000308010018-0

CAVOPOL, V.

Extension of the utilization of high-frequency currents for hardening rolling mill cylinders. p. 22
(METALURGIA SI CONSTRUCTIA DE MASINI. RUMANIA. Vol. 8, no. 5, May 1956.)

SO: Monthly List of East European Accessions (EEAL) LC, Vol. 6, no. 7, July 1957. Uncl.

APPROVED FOR RELEASE: 06/09/2000 CIA-RDP86-00513R000308010018-0"

"APPROVED FOR RELEASE: 06/09/2000 CIA-RDP86-00513R000308010018-0

CAVOPOL, Vasile
SURNAME (in caps); Given Names

Country: Rumania

Academic Degrees: Engineer

Affiliation: -not given-

Source: Bucharest, Stiinta si Tehnica, No 6, Jun 1961, pp 18-19.

Data: "Explosion Compresses."

APPROVED FOR RELEASE: 06/09/2000 CIA-RDP86-00513R000308010018-0"

"APPROVED FOR RELEASE: 06/09/2000 CIA-RDP86-00513R000308010018-0

RUMANIA

CAVULEA, O., Lieutenant-Colonel, Medical Veterinary Corps; GHEORGHE, N.; GASPAR, A.; PLESCA, I., Major, Medical Corps; BERGHEANU, S., Lieutenant-Colonel, Pharmacist; POPESCU, Gh., Lieutenant-Colonel, Medical Corps; and MILEA, T.

"Effect of Some Subcellular Thymus Tissue Fractions in Radiation Sickness in Mice"

Bucharest, Revista Sanitara Militara, Vol 16, Special No., 1965; pp 414-417

Abstract: Study on 390 mice, including 200 thymus donors: gland tissue was divided into mitochondria and nuclei; single administration of mitochondria was better than repetitive administration; administration of nuclei alone was best. 2 tables.

1/1

APPROVED FOR RELEASE: 06/09/2000 CIA-RDP86-00513R000308010018-0"

"APPROVED FOR RELEASE: 06/09/2000 CIA-RDP86-00513R000308010018-0

L 30158-66 : RO

ACC NR: AP6020332

SOURCE CODE: RU/0012/65/061/001/0113/0117

AUTHOR: Muresan, V. (Doctor); Nicolau, Elena (Doctor); Cavulea, O. (Veterinarian; Major); Stoicescu, Rodica (Biologist)

ORG: none

35

B

TITLE: Pharmacodynamic action of trimethylene bis-4-hydroxy-iminomethyl-pyridine bromide

SOURCE: Revista sanitara militara, v. 61, no. 1, 1965, 113-117

TOPIC TAGS: pharmacology, organic phosphorus compound, antidote, organic imine compound, toxicity, rat, pyridine

ABSTRACT: The authors studied the pharmacodynamic action of TMB4 on normal animals. (The compound is used as antidote for organophosphorus intoxications, and previous studies refer to its action in intoxicated animals.). They found an index of toxicity, DL_{50} = 63 mg/kg ± 2.5 in rats, and found a dose of 5 mg/kg to have the following effects: nicotinolytic action; ganglioplegic action; excitation of respiration; and potentiation of ether anesthesia. Orig. art. has: 7 figures and 2 tables. [JPRS]

SUB CODE: 06, 07 / SUBM DATE: none / ORIG REF: 001 / OTH REF: 009

Card 1/1 UKR

APPROVED FOR RELEASE: 06/09/2000 CIA-RDP86-00513R000308010018-0"

"APPROVED FOR RELEASE: 06/09/2000 CIA-RDP86-00513R000308010018-0

RUMANIA

MARES, E., Lieutenant-General, Medical Corps, Dr. and Docent in Medical Sciences, Physician Emeritus (General-locotenent medic, doctor docent in stiinte medicale, medic emerit); SUTEU, I., Colonel, Medical Corps (Col. medic); GIURGIU, T., Lieutenant-Colonel, Medical Veterinary Corps (Lt.-Col. medic vet.); BACIU, D., Lieutenant-Colonel, Medical Corps, (Lt.-Col. medic); and CAVULEA, O., Lieutenant-Colonel, Medical Veterinary Corps, (Lt.-Col. medic vet.)

"Studies on Enteric Oxygen Therapy in Experimental Shock"

Bucharest, Revista Sanitara Militara, Vol 16, Special No., 1965; pp 33-37

Abstract: Study with dogs and rabbits treated with rectally administered oxygen revealed that this procedure would prolong survival in exsanguination shock. Restoration of adequate oxygenation of the portal blood was most important mode of action and effect. 1 table, 2 kymograms and graph.

1/1

APPROVED FOR RELEASE: 06/09/2000 CIA-RDP86-00513R000308010018-0"

"APPROVED FOR RELEASE: 06/09/2000 CIA-RDP86-00513R000308010018-0

Radiobiology

RUMANIA

POPESCU, Gh., Dr, Lt-Col, CAVULEA, O., Veterinarian, Lt-Col, APOSTOLESCU, R., Dr, MIU, C., Pharmacist, Maj, VOICU, V., Dr, Lt-Col, and CHILIANU, Gh., Dr, Cpt [affiliation not given]

"Observations Concerning the Effect of Radioprotection on Irradiated and Burned Animals."

Bucharest, Revista Sanitara Militara, Vol 62, No 2, Mar-Apr 66, pp 289-297.

Abstract: A report on an experimental study to determine the radioprotective effectiveness of cystamine and cystine for burned and irradiated animals. The study, which used 180 mature rats, showed that the protected animals, especially those irradiated with 400 oentgen units, showed a more attenuated evolution of the disease and a somewhat smaller intensity of histopathologic lesions. The difference in mortality between the protected animals and the controls was not significant.

Includes 7 figures, 2 tables and 12 references, of which 5 Rumanian, 2 Russian and 5 Western. -- Manuscript submitted 19 July 1965.

1/1

APPROVED FOR RELEASE: 06/09/2000 CIA-RDP86-00513R000308010018-0"

"APPROVED FOR RELEASE: 06/09/2000 CIA-RDP86-00513R000308010018-0

L 29269-66

ACC NR: AP6019363 SOURCE CODE: RU/0012/65/061/006/0981/0986

AUTHOR: Popescu, Gh. (Doctor; Lieutenant colonel); Cavulea, O. (Veterinarian; Lieutenant colonel); Bergheanu, S. (Engineer; Pharmacist; Lieutenant colonel); Wasserstrom, V. (Doctor; Colonel; Candidate of medical sciences); Herscovici, H. (Doctor; Lieutenant colonel)

ORG: none

30
B

TITLE: Functional exploration of the kidney with the aid of isotopic nephrograms in irradiated and burned animals

19 22

SOURCE: Revista sanitara militara, v. 61, no. 6, 1965, 981-986

TOPIC TAGS: dog, radiation biologic effect, radiation injury, excretion

ABSTRACT: Studies involving 20 dogs showed that the radio-isotopic method for the study of renal affliction is easily supported by the animals, rapid and relatively accurate. In irradiated dogs without burns, no changes in renal functions were noted by this method; third degree burns over 10 percent of the body surface aggravated the evolution of irradiation disease, with an early disturbance of renal functions. Orig. art. has: 7 figures and 1 table. [JPRS]

SUB CODE: 06 / SUBM DATE: 26Dec64 / ORIG REF: 004 / OTH REF: 004
SOV REF: 001

Card 1/1 CC

APPROVED FOR RELEASE: 06/09/2000 CIA-RDP86-00513R000308010018-0"

"APPROVED FOR RELEASE: 06/09/2000 CIA-RDP86-00513R000308010018-0

3

New sources of tanning materials. H. Hirsch, H. Hass and E. Cărăceanu (*Bull. Inst. polyt., Jassy*, 1955, 1, 149—158).—*Filipendula ulmaria maxim* ("*Crețușca*"), which grows wild in abundance in Roumania, has a tannin content of 9·2—11·6%: cultivation of the plant provides an important new source for tanning materials. (From French summary.)

J. S.C.

Matls

APPROVED FOR RELEASE: 06/09/2000 CIA-RDP86-00513R000308010018-0"

"APPROVED FOR RELEASE: 06/09/2000 CIA-RDP86-00513R000308010018-0

POPESCU, M.P.; GRADINA, C.; CHIHAIA, Victoria; CINCA, N.; KRAUS, Floreta; CONSTANTINIDIS, Angela; PASCU, V.; ANITESCU, Constanta; CAZACEANU, Ecaterina

Ophthalmic angiodynamics in conditions of fluorescent illumination. Stud. cercet. fiziol. 10 no.3:273-280 '65.

APPROVED FOR RELEASE: 06/09/2000 CIA-RDP86-00513R000308010018-0"

"APPROVED FOR RELEASE: 06/09/2000 CIA-RDP86-00513R000308010018-0

STOENESCU, St. M.; JIANU, V.; CAZACU, Al.; VLADOIU, M.; MIHA, J.

Some characteristics of the climate of the Danube Delta. Meteorologia hidrol gosp 6 no.3:183-192 '61.

1. Institutul meteorologic (for Cazacu, Vladoiu, and Miha).

APPROVED FOR RELEASE: 06/09/2000 CIA-RDP86-00513R000308010018-0"

"APPROVED FOR RELEASE: 06/09/2000 CIA-RDP86-00513R000308010018-0

IVAN, I.M.; CAZACU, E.; BUSUIOC, Carmen; STOICESCU, Atena; CAZACU, E.

Sero-epidemiological observations on influenza in students in the winter of 1963-1964 in the city of Bucharest. Studii cercet. inframicrobiol. 15 no.6:523-527 '64

APPROVED FOR RELEASE: 06/09/2000 CIA-RDP86-00513R000308010018-0"

"APPROVED FOR RELEASE: 06/09/2000 CIA-RDP86-00513R000308010018-0

CAZACU, C.

Combustion of Rumanian lignites in rest and in agitated beds.

P. 7, (Academia, Republicii, Populare Romine. Institutul de Energetica. Studii Si Ceretari de Energetica. Vol. 7, no. 1, 1957, Bucuresti, Rumania)

Monthly Index of East European Accessions (EEAI) LC. Vol. 7, no. 2, February 1958

APPROVED FOR RELEASE: 06/09/2000 CIA-RDP86-00513R000308010018-0"

"APPROVED FOR RELEASE: 06/09/2000 CIA-RDP86-00513R000308010018-0

CAZACU, C.

Combustion of Rumanian lignites on inverse push grates.

P. 21 (Academia Republicii Populare Romine. Institutul de Energetica. Studii Si Ceretari de Energetica. Vol. 7, no. 1, 1957, Bucuresti, Rumania)

Monthly Index of East European Accessions (FEAI) LC. Vol. 7, no. 2, February 1958

APPROVED FOR RELEASE: 06/09/2000 CIA-RDP86-00513R000308010018-0"

"APPROVED FOR RELEASE: 06/09/2000 CIA-RDP86-00513R000308010018-0

CAZACU, C.

TECHNOLOGY

PERIODICAL: ENERGETICA. Vol. 6, No. 12, Dec. 1958

CAZACU, C. Some aspects of lignite crushing for use as pulverized fuel. p. 531

Monthly List of East European Accessions (EEAI) LC Vol. 8, No. 4
April 1959, Unclass.

APPROVED FOR RELEASE: 06/09/2000 CIA-RDP86-00513R000308010018-0"

"APPROVED FOR RELEASE: 06/09/2000 CIA-RDP86-00513R000308010018-0

CAZACU, C.

Some aspects of burning sawdust in industrial boilers. p.103.

INDUSTRIA LEMNULUI. (Asociatia Stiintifica a Inginerilor si Tehnicienilor din Rominia si Ministerul Industriei Lemnului) Bucuresti, Rumania. Vol. 8, no. 3, March 1959.

Monthly List of East European Accessions (EEAI) IC, Vol. 8, no. 7, July 1959

Uncl.

APPROVED FOR RELEASE: 06/09/2000 CIA-RDP86-00513R000308010018-0"

"APPROVED FOR RELEASE: 06/09/2000 CIA-RDP86-00513R000308010018-0

CAZACU, C.

On pseudoanalytic transformations. In French. p. 383.

REVUE DE MATHEMATIQUES PURES ET APPLIQUEES. JOURNAL OF PURE AND APPLIED MATHEMATICS. (Academia Republicii Populare Romine) Bucuresti. Rumania. Vol. 2, 1957.

Monthly List of East European Accessions (EEAL) LC. Vol. 9, no. 1, January 1960. UNCL

APPROVED FOR RELEASE: 06/09/2000 CIA-RDP86-00513R000308010018-0"

"APPROVED FOR RELEASE: 06/09/2000 CIA-RDP86-00513R000308010018-0

PANOIU, N; CAZACU, C.

Combustion of the Rumanian lignite in fluidized layer. Influence of the furnace profiling and the characteristics of the combustible upon the combustion process. Studii cerc energet 11 no.4:763-770 '61.

APPROVED FOR RELEASE: 06/09/2000 CIA-RDP86-00513R000308010018-0"

"APPROVED FOR RELEASE: 06/09/2000 CIA-RDP86-00513R000308010018-0

CAZACU, C.

Distribution of the residues of a certain order h, modulus p.
Studii mat Iase 12 no.2:205-211 '61.

APPROVED FOR RELEASE: 06/09/2000 CIA-RDP86-00513R000308010018-0"

"APPROVED FOR RELEASE: 06/09/2000 CIA-RDP86-00513R000308010018-0

S/044/63/000/002/010/050
A060/A126

AUTHOR: Andreian Cazacu, Cabiria

TITLE: On the problem of type

PERIODICAL: Referativnyy zhurnal, Matematika, no. 2, 1963, 25 - 26, abstract 2B110 (An. Univ. C. I. Pathon. Ser. ştiint natur., 1959, no. 22, 23 - 37; Rumanian; summaries in Russian, French)

TEXT: M.A. Lavrent'yev's result is known: the quasiconformal mapping of the finite plane $z = r \exp(i\theta)$ with characteristic $p(z)$ retains the parabolic type, provided the integral

$$\int^{\infty} \frac{dr}{rp(r)}$$

diverges, where $p(r) = \max_{|z|=r} p(z)$. The author, generalizing a result of R.J. Wille (Indagationes Math., 1947, v. 9, no. 4, 415 - 419), proves that for certain special classes of quasiconformal mappings this integral criterion can be im-

Card 1/3

APPROVED FOR RELEASE: 06/09/2000 CIA-RDP86-00513R000308010018-0"

"APPROVED FOR RELEASE: 06/09/2000 CIA-RDP86-00513R000308010018-0

proved. Let $\{c_\lambda\}$ be the family of level lines of a continuously differentiable function $\lambda = \lambda(x, y)$, $\lambda \in (\lambda_0, \infty)$ (if $\lambda' < \lambda''$, then $c_{\lambda'}$ lies within $c_{\lambda''}$ and as $\lambda \to \infty$, c_λ contracts to the point $z = \infty$), filling the domain $\delta \subset (|z| < \infty)$, $z = x + iy$. Orthogonal to $\{c_\lambda\}$ is the family $\{\gamma_t\}$ of level lines of the continuously differentiable function $t = t(x, y)$, $t \in [a, b]$, $\gamma_a = \gamma_b$, where λ and t form a system of curvilinear coordinates in δ. With respect to $\{c_\lambda\}$ and $\{\gamma_t\}$ it is assumed that

$$\frac{|\mathrm{grad}\ \lambda|}{|\mathrm{grad}\ t|} = F(\lambda) \cdot G(t),$$

where $F(\lambda) \geqslant 0$ and $G(t) \geqslant 0$. Let $\{C_\Lambda\}$ and $\{\Gamma_T\}$ be analogous families in the Z plane covering the domain Δ. One constructs a quasiconformal mapping δ on Δ in the form $\Lambda = g(\lambda)$ and $T = h(\lambda, t)$ with one pair of characteristics $p(z) = p(\lambda)$ and $\alpha(z) = \alpha(\lambda)$ for $z \in C_\lambda$, where $\alpha(z)$ is the angle between the tangent to C_λ and the major semiaxis of an infinitesimally small ellipse centered at the point z. Such a mapping $Z = f(z)$ exists when certain conditions are fulfilled. In order that $Z = f(z)$ retain the parabolic type it is necessary and sufficient that the integral

APPROVED FOR RELEASE: 06/09/2000 CIA-RDP86-00513R000308010018-0"

"APPROVED FOR RELEASE: 06/09/2000 CIA-RDP86-00513R000308010018-0

S/044/63/000/002/010/050
A060/A126

On the problem of type

$$\int^{\infty} \frac{p(\lambda)}{\cos^2 \alpha(\lambda) + p^2(\lambda) \sin^2 \alpha(\lambda)} \frac{d\lambda}{F(\lambda)}$$

diverge. The applications of this result to the problem of a Riemann type surface are indicated.

D.B. Potyagaylo

[Abstracter's note: Complete translation]

Card 3/3

APPROVED FOR RELEASE: 06/09/2000 CIA-RDP86-00513R000308010018-0"

"APPROVED FOR RELEASE: 06/09/2000 CIA-RDP86-00513R000308010018-0

CAZACU, A.

RUMANIA

Al. BRONITKI, R. DEMETRESCU, G. DONA, M. CONSTANTINESCU and A. CAZACU, Inframicrobiology Institute of the Rumanian Academy [of Sciences] (Institutul de Inframicrobiologie al Academiei R.P.R.) [Bucharest.]

"Isolation of Large Inframicrobes During the Influenza Epidemic 1962."

Bucharest, Studii si Cercetari de Inframicrobiologie, Vol 14, No 2, 1963; pp 197-201.

Abstract [English summary modified]: From 171 specimens (including 110 nasopharyngeal smears, 48 of urine) of influenza patients during the 1962 epidemic, 6 influenza virus strains were isolated but only when incubating at 35 rather than 37 centigrade. Also 10 larger, rickettsia-like agents (cell size 200 to 400 microns) Speculative discussion as to significance; considered probable. Three photomicrographs; 10 Rumanian (incl. thesis) and 3 Western references.

1/1

APPROVED FOR RELEASE: 06/09/2000 CIA-RDP86-00513R000308010018-0"

"APPROVED FOR RELEASE: 06/09/2000 CIA-RDP86-00513R000308010018-0

CAZACU, Cabiria Andreian

Rengel's inequalities and the geometric definition of quasi-conformal representations. Rev math Roum 9 no.2: 141-155 '64.

APPROVED FOR RELEASE: 06/09/2000 CIA-RDP86-00513R000308010018-0"

"APPROVED FOR RELEASE: 06/09/2000 CIA-RDP86-00513R000308010018-0

CAZACU, Cabiria Andreian

On a problem of L.I.Volkovyski. Rev math Roum 10 no.1:43-63 '65.

1. Faculty of Mathematics and Mechanics, University of Bucharest.
Submitted May 7, 1964.

APPROVED FOR RELEASE: 06/09/2000 CIA-RDP86-00513R000308010018-0"

"APPROVED FOR RELEASE: 06/09/2000 CIA-RDP86-00513R000308010018-0

L 63904-65 EWT(d) IJP(c)

ACCESSION NR: AP5016475 RU/0021/65/010/004/0409/0429

13
B

AUTHOR: Cazacu, C. A.

TITLE: Boundary value problems of quasi-conformal representations

SOURCE: Revue Roumaine de mathematiques pures et appliquees, v. 10, no. 4, 1965, 409-429

TOPIC TAGS: quasiconformal representation, boundary value problem, boundary problem, Lavrent'yev characteristic

ABSTRACT: The general method previously described by the author (Revue Roum. de Math. pures et appl., 1965, 10, 1, 43-63) was employed to solve various boundary value problems of quasi-conformal representations for which the Lavrent'yev characteristics fulfill certain conditions. The following cases are considered: the case of a single unknown characteristic, the case of two unknown characteristics, the case of three unknown characteristics, and the general case. Numerical examples are presented for a number of variants of each case to illustrate the computations involved. Orig. art. has: 34 formulas.

ASSOCIATION: Faculté de Mathématiques - Mécanique de l'Université de Bucarest (Mathematics and Mechanics Faculty, Bucharest University)

Card 1/2

APPROVED FOR RELEASE: 06/09/2000 CIA-RDP86-00513R000308010018-0"

"APPROVED FOR RELEASE: 06/09/2000 CIA-RDP86-00513R000308010018-0

L 63904-65

ACCESSION NR: AP5016475

SUBMITTED: 07May64 ENCL: 00 SUB CODE: MA

NO REF SOV: 000 OTHER: 003

Card 2/2

APPROVED FOR RELEASE: 06/09/2000 CIA-RDP86-00513R000308010018-0"

"APPROVED FOR RELEASE: 06/09/2000 CIA-RDP86-00513R000308010018-0

CAZACU, E.

Drying and impregnation with petrolatum of beechwood beer barrels.

p. 323 (Industria Lemnului. Vol. 6, no. 9, Sept. 1957. Bucuresti, Rumania)

Monthly Index of East European Accessions (EEAI) LC. Vol. 7, no. 2, February 1958

APPROVED FOR RELEASE: 06/09/2000 CIA-RDP86-00513R000308010018-0"

"APPROVED FOR RELEASE: 06/09/2000 CIA-RDP86-00513R000308010018-0

CAZACU, E., ing.; ROSCA, M., ing.

Present technical aspects on sprinkling irrigation. Hidrotehnica 8 no.8:292-297 Ag'63

APPROVED FOR RELEASE: 06/09/2000 CIA-RDP86-00513R000308010018-0"

"APPROVED FOR RELEASE: 06/09/2000 CIA-RDP86-00513R000308010018-0

CAZACU, E., ing.

"Influence of humidity on the physical and mechanical properties of wood" by N. L. Leontiev. Reviewed by E. Cazacu. Ind lemnului 14 no. 12: 481 D '63.

APPROVED FOR RELEASE: 06/09/2000 CIA-RDP86-00513R000308010018-0"

"APPROVED FOR RELEASE: 06/09/2000 CIA-RDP86-00513R000308010018-0

CAZACU, E., ing.

Notes. Ind lemnului 14 no. 12: 474-478 D '63.

APPROVED FOR RELEASE: 06/09/2000 CIA-RDP86-00513R000308010018-0"