"APPROVED FOR RELEASE: 06/12/2000 CIA-RDP86-00513R000308320019-5

CHENTSOV, V.N.

"Administrative and political division of foreign countries" by A.G. Shiger. Reviewed by V.N. Chentsov. Vop.geog. no.42:215-217 '58. (MIRA 11:11)
(Administrative and political divisions) (Shiger, A.G.)

APPROVED FOR RELEASE: 06/12/2000 CIA-RDP86-00513R000308320019-5"

"APPROVED FOR RELEASE: 06/12/2000 CIA-RDP86-00513R000308320019-5

CHENTSOV, V.N., kand.geograf.nauk

Mathematico-statistical methods in cartography. Geod. i kart. no.7:63-67 Jl '60. (MIRA 13:9)
(Cartography) (Mathematical statistics)

APPROVED FOR RELEASE: 06/12/2000 CIA-RDP86-00513R000308320019-5"

"APPROVED FOR RELEASE: 06/12/2000 CIA-RDP86-00513R000308320019-5

S/033/60/037/005/010/024
E032/E514

AUTHORS: Barkhatova, K. A. and Chentsov, Ye. L.

TITLE: A Study of the Open Cluster NGC 1605

PERIODICAL: Astronomicheskiy zhurnal, 1960, Vol.37, No.5, pp. 864-869

TEXT: The stars belonging to the open cluster NGC 1605 were investigated photometrically by K. A. Barkhatova and Yu.A.Pupyshev using the 15" Schmidt telescope at the Astronomical Observatory imeni Engel'hardt. Star counts showed that the NGC 1605 cluster consists of approximately eighty stars. The cluster has an elongated form without any noticeable concentration towards the centre. In projection the cluster resembles an ellipse rather than a disc, the ratio of the semi-axes being 1:1.5 (Fig.3). The major axis of the ellipse is almost perpendicular to the plane of the Galaxy (Fig.3). The star No.21 (Fig.4) was taken as the centre of the cluster in the star count. The colour index - apparent magnitude diagram was constructed on the basis of the photometric data. Table 1 on p.868 gives the photographic and photovisual magnitudes and also the colour indices of the stars

Card 1/3

APPROVED FOR RELEASE: 06/12/2000 CIA-RDP86-00513R000308320019-5"

"APPROVED FOR RELEASE: 06/12/2000 CIA-RDP86-00513R000308320019-5

S/033/60/037/005/010/024
E032/E514

A Study of the Open Cluster NGC 1605

(numbered in accordance with Fig.4). The main sequence can be clearly seen in the colour-magnitude diagram (Fig.5). The brightest members of the cluster have an apparent photographic magnitude of $14^m.5$ and a colour index of $+0^m.5$. The unusual slope of the main sequence may possibly be explained by the fact that for the majority of the faint stars their position on the diagram is not known with certainty. A more careful determination of the stellar magnitudes and colour indices will be necessary before it will be possible to state unequivocally that the unusual slope is in fact real. The distance to the cluster was found to be 1480 pc and the angular diameter 7'. It follows that the linear diameter is 2.6 pc. It is noted that the brightest members of the clusters have magnitudes of $14^m.5$ so that the problem of the reality of the unusual slope of the main sequence will take some time to resolve. Acknowledgments are expressed to Sh.T.Khabibullin and Yu. A. Pupyshev of AOE and to E. S. Brodskuy, L.S.Galkin and I. M. Kopylov of the Crimean Astronomical Observatory for their collaboration. There are 5 figures, 1 table and 5 references:

Card 2/3

APPROVED FOR RELEASE: 06/12/2000 CIA-RDP86-00513R000308320019-5"

"APPROVED FOR RELEASE: 06/12/2000 CIA-RDP86-00513R000308320019-5

S/033/60/037/005/010/024
E032/E514

A Study of the Open Cluster NGC 1605

2 Soviet and 3 English.

ASSOCIATION: Ural'skiy gosudarstvennyy universitet imeni A. M. Gor'kogo (Ural State University imeni A. M. Gor'kiy)

SUBMITTED: November 22, 1959

Card 3/3

APPROVED FOR RELEASE: 06/12/2000 CIA-RDP86-00513R000308320019-5"

"APPROVED FOR RELEASE: 06/12/2000 CIA-RDP86-00513R000308320019-5

CHENTSOV, Yu. S. Cand Biol Sci -- (diss) "Experimental histological study of tumors occurring in cases of intramuscular ~~introduction of carcinogens.~~ injection cancerogenous substance." Mos, 1957. 16 pp (Mos Order of Lenin and Order of Labor Red Banner Univ im M. V. Lomonosov), 100 copies (KL, 44-57, 99)



APPROVED FOR RELEASE: 06/12/2000 CIA-RDP86-00513R000308320019-5"

"APPROVED FOR RELEASE: 06/12/2000 CIA-RDP86-00513R000308320019-5

USSR/General Problems of Pathology - Tumors. Morphology. U

Abs Jour : Ref Zhur Biol., No 5, 1959, 22749

Author : Chentsov, Yu. S.
Inst : ---
Title : Experimental-Histological Study of Induced Muscular Tumors.

Orig Pub : Dokl. AN SSSR, 1957, 117, No 2, 349-352

Abstract : To male rats (80) weighing 120 g, divided into 4 groups, 4 mg of 3,4-benzpyrene in sunflower oil was introduced into the right gastrocnemic muscle by means of 2-4 injections at intervals of 7-14 days. In the I and II groups, during the course of approximately 1 month, 40 through punctures were done with a needle; in group III, about 2 months; group IV was control. In 69 animals, 20 rhabdimyoblastomas (R) and 49 sarcomas of various structure without special differences between the groups developed. The latent period was 126-133 days.

Card 1/2

Moscow State Univ.

APPROVED FOR RELEASE: 06/12/2000 CIA-RDP86-00513R000308320019-5"

"APPROVED FOR RELEASE: 06/12/2000 CIA-RDP86-00513R000308320019-5

USSR/General Problems of Pathology. Tumors. Morphology. U

Abs Jour : Ref Zhur Biol., No 5, 1959, 22749

R were characterized by polymorphism of elements, the presence of large spindle-shaped and specific giant cells, fibrillarity of protoplasm, characteristic structure of stroma. They are unequally rich in RNA, especially their nucleoli, According to the topography of DNA, nuclei with granules of DNA are differentiated, which are collected perinuclearly and around nucleoli and other nuclei with regularly disseminated granules. Glycogen is discovered only in the zones of degeneration. Mitoses are not frequent; straight longitudinal and transverse fibrillization and fragmentation of nuclei are found. The structure and topography of nucleic acids and glycogen in R is different from that in normal muscular fibers. -- A.G. Andres

Card 2/2



APPROVED FOR RELEASE: 06/12/2000 CIA-RDP86-00513R000308320019-5"

"APPROVED FOR RELEASE: 06/12/2000 CIA-RDP86-00513R000308320019-5

STUDITSKIY,A.N., otv.red.; GRAYEVSKIY,E.Ya., red.; GRIGOR'YEV,T.A., red.; YELISEYEV,V.G., red.; ZBARSKIY,I.B., red.; LIOZNER,L.D., red.; MITSKEVICH,M.S., red.; FRIDENSHTEYN,A.Ya., red.; KHRUSHCHOV,G.K., red.; CHENTSOV,Yu.S., red.; SMIRNOV,Z., red.; LAVRENT'YEVA,G., tekhn.red.

[Transactions of the Second Histological Conference; plastic and restorative processes] Plasticheskie i vosstanovitel'nye protsessy; trudy Vtoroi gistologicheskoi konferentsii. Moskva, Mosk. nauchn.ob-vo anatomov, gistologov i embriologov, 1959. 319 p. (MIRA 14:5)

1. Kafedra gistologii Moskovskogo gosudarstvennogo universiteta im.M.V.Lomonosova, Moskva (for Studitskiy). 2. Laboratoriya radiobiologii Instituta morfologii zhivotnykh im.A.N.Severtseva AN SSSR, Moskva (for Grayevskiy, Zbarskiy) 3. Kafedra gistologii, i embriologii Leningradskogo sanitarno-gigiyenicheskogo meditsinskogo instituta, Leningrad (for Grigor'yev). 4. Kafedra gistologii i embriologii 1-go Meditsinskogo instituta im.Sechenova, Moskva (for Yeliseyev). 5. Gruppa biokhimii kletochnykh struktur Instituta morfologii zhivotnykh im.A.N.Severtsova AN SSSR, Moskva (for Zbarskiy). 6. Laboratoriya rosta i razvitiya Instituta eksperimental'noy biologii AMN SSSR, Moskva (for Liozner). 7. TSentral'naya nauchno-issledovatel'skaya Laboratoriya 2-go Moskovskogo meditsinskogo instituta im.N.I.Pirogova, Moskva, (for Khrushchov).

(HISTOLOGY--CONGRESSES)

APPROVED FOR RELEASE: 06/12/2000 CIA-RDP86-00513R000308320019-5"

"APPROVED FOR RELEASE: 06/12/2000 CIA-RDP86-00513R000308320019-5

CHENTSOV, Yu.S.

Histochemical and electron microscope study of mucoprotein inclusions in cells of induced rat sarcoma. TSitologiia 2 no.6:730-735 N-D '60. (MIRA 13:12)

1. Laboratoriya gistologii Instituta morfologii zhivotnykh AN SSSR, Moskva.
(MUCOPROTEINS) (TUMORS)

APPROVED FOR RELEASE: 06/12/2000 CIA-RDP86-00513R000308320019-5"

"APPROVED FOR RELEASE: 06/12/2000 CIA-RDP86-00513R000308320019-5

CHENTSOV, Yu.S.

Behavior of embryonal muscular tissue and tissue of muscular tumors transplanted in the minced state to the site of removed muscles in adult rats. Arkh. anat. gist. i embr. 39 no. 12:65-71 '60. (MIRA 14:2)

1. Laboratoriya gistologii (zav. - prof. A.N. Studitskiy) Instituta morfologii zhivotnykh im.A.N. Severtsova AN SSSR.
2. Moskva, Leninskiy pr., 33, Institut morfologii zhivotnykh im. A.N. Severtsova AN SSSR.
(MUSCLES—TRANSPLATATION) (MUSCLES—TUMORS)

APPROVED FOR RELEASE: 06/12/2000 CIA-RDP86-00513R000308320019-5"

"APPROVED FOR RELEASE: 06/12/2000 CIA-RDP86-00513R000308320019-5

CHENTSOV, Yu.S.

Some submicroscopic characteristics of induced muscle tumors. Biul. MOIP. Otd. biol. 65 no.5:130-131 S-O '60. (MIRA 13:12)
(TUMORS)

APPROVED FOR RELEASE: 06/12/2000 CIA-RDP86-00513R000308320019-5"

"APPROVED FOR RELEASE: 06/12/2000 CIA-RDP86-00513R000308320019-5

CHENTSOV, Yu.S.; BOROVYAGIN, V.L.; BRODSKIY, V.Ya.

Submicroscopic morphology of the ganglion neurons of the retina as a reflection of some characteristics of their metabolism. Biofizika 6 no.5:590-595 '61. (MIRA 15:3)

1. Institut biologicheskoy fiziki AN SSSR, Moskva i Institut morfologii zhivotnykh imeni A.N. Severtsova AN SSSR, Moskva.
(RETINA--INNERVATION)

APPROVED FOR RELEASE: 06/12/2000 CIA-RDP86-00513R000308320019-5"

"APPROVED FOR RELEASE: 06/12/2000 CIA-RDP86-00513R000308320019-5

CHENTSOV, Yu.S.

Some characteristics of cellular ultrastructure in experimental tumors. Zhur. ob. biol. 22 no.5:383-387 S-O '61. (MIRA 14:9)

1. Institut morfologii zhivotnykh im. A.N.Severtsova AN SSSR, Moskva.
(CELLS) (CANCER)

APPROVED FOR RELEASE: 06/12/2000 CIA-RDP86-00513R000308320019-5"

"APPROVED FOR RELEASE: 06/12/2000 CIA-RDP86-00513R000308320019-5

ODINTSOVA, M.S. Prinimali uchastiye: MALKOVA, M.G.; KOSAREVA, Ye.A. BASS, I.A. [translator]; BEKINA, R.M. [translator]; GVOZDEV, V.A. [translator]; GEORGIYEV, G.P. [translator]; GUMILEVSKAYA, N.A. [translator]; KUVAYEVA, Ye.B. [translator]; MIL'MAN, L.S. [translator]; MIKHAYLOVA, Ye.S. [translator]; MOSOLOVA, I.M. [translator]; PINUS, Ye.A. [translator]; SAL'KOVA, Ye.P. [translator]; SAMARINA, O.P. [translator]; CHENTSOV, Yu.S. [translator]; VETROVA, I.B., red.izd-va; DOROKHINA, I.N., tekhn.red.

[Functional biochemistry of cell structures; symposium 2] Funktsional'naia biokhimiia kletochnykh struktur; simpozium II. 1962. 314 p. (MIRA 16:1)

1. International Congress of Biochemistry. 5th, Moscow, 1961. (BIOCHEMISTRY—CONGRESSES)

APPROVED FOR RELEASE: 06/12/2000 CIA-RDP86-00513R000308320019-5"

"APPROVED FOR RELEASE: 06/12/2000 CIA-RDP86-00513R000308320019-5

CHENTSOV, Yu.S.

Electron microscopy of some tumors of the mammary glands of rats following total irradiation. Zhur.ob.biol. 23. no.6:410-416 N-D'62. (MIRA 16:7)

1. Laboratory of Histology, Institute of Animal Morphology, Academy of Sciences of the U.S.S.R.
(BREAST—TUMORS) (X-RAYS—PHYSIOLOGICAL EFFECT)

APPROVED FOR RELEASE: 06/12/2000 CIA-RDP86-00513R000308320019-5"

"APPROVED FOR RELEASE: 06/12/2000 CIA-RDP86-00513R000308320019-5

GEORGIYEV, G.P.; CHENTSOV, Yu.S.

Ultrastructures of the nucleus on the basis of electron microscopy of isolated nuclei subjected to extraction by salts. Biofizika 8 no.1:50-57 '63. (MIRA 17:8)

1. Institut morfologii zhivotnykh imeni Severtsova AN SSSR, Moskva.

APPROVED FOR RELEASE: 06/12/2000 CIA-RDP86-00513R000308320019-5"

"APPROVED FOR RELEASE: 06/12/2000 CIA-RDP86-00513R000308320019-5

BIRYUZOVA, Valentina Ivanovna; BOROVYAGIN, Valeriy Leonidovich; GILEV, Vladimir Petrovich; KISELEV, Nikolay Andreyevich; TIKHONENKO, Anna Sergeyevna; CHENTSOV, Yuriy Sergeyevich; FRANK, G.M., otv. red.; SHMELEV, I.P., red.izd-va; RYLINA, Yu.V., tekhn. red.

[Electron-microscopic methods for studying biological objects] Elektronnomikroskopicheskie metody issledovaniia biologicheskikh ob"ektov. [By] V.I.Biriuzova i dr. Moskva, Izd-vo Akad. nauk SSSR, 1963. 203 p. (MIRA 16:6)

1. Institut radiatsionnoy i fiziko-khimicheskoy biologii AN SSSR (for Biryuzova, Tikhonenko). 2. Institut biologicheskoy fiziki AN SSSR (for Borovyagin). 3. Laboratoriya elektronnoy mikroskopii AN SSSR (for Gilev). 4. Institut kristallografii AN SSSR (for Kiselev). 5. Institut morfologii zhivotnykh AN SSSR (for Chentsov). 6. Chlen-korrespondent AN SSSR (for Frank).
(Biological research) (Electron microscopy)

APPROVED FOR RELEASE: 06/12/2000 CIA-RDP86-00513R000308320019-5"

"APPROVED FOR RELEASE: 06/12/2000 CIA-RDP86-00513R000308320019-5

CHERNTSOV, Yu. V.

AUTHORS: Vertsner, V. N., Ivanov, M. G., Kuselkin, V. V., Bogdanovskiy, G. A., Korob'yev, Yu. V., Klyukin, V. Ye., Nikiforova, V. A., Chentsov, Yu. V.

SOV/48-23-4-12/21

TITLE: The Series Electron Microscope EM-5 (Seriynyy elektronnyy mikroskop EM-5)

PERIODICAL: Izvestiya Akademii nauk SSSR, Seriya fizicheskaya, 1959, Vol 23, Nr 4, pp 485 - 489 (USSR)

ABSTRACT: The electron microscope EM-5 is a high-resolution instrument (Fig 1). The principal elements are arranged vertically and the image screen exhibits high resolution. There is a camera, and various adjusting facilities allow good working conditions. In the object, the part hit by the electron beam has a diameter of 7-5 μ. The object is situated on an object slide, which is movable from outside. The object lens and its stigmator consisting of eight coils are accurately described, as well as the intermediate and projecting lens. The diffraction mount allows electronography with penetrating and reflected beam. The camera works with plate dimensions of 4.5×5 cm and 4.5×3 cm. The instrument features a special vacuum system. Acceleration takes place by the voltage steps 40, 50, and 60 kv. The current source is stabilized, its

Card 1/2

3

fluctuation amounting to 0.001%. The electrical supplies are discussed. The electron microscope EM-5 allows a bright and dark field illumination, stereoscopic investigations, microdiffraction images, dark field investigations of the diffraction reflexes, etc. On focusing, the image screen is observed through a binocular microscope with a 9fold magnification. The resolving power amounts to 20 Å. There are 3 figures and 3 Soviet references.

Card 2/2

APPROVED FOR RELEASE: 06/12/2000 CIA-RDP86-00513R000308320019-5"

"APPROVED FOR RELEASE: 06/12/2000 CIA-RDP86-00513R000308320019-5

AUTHORS: Chentsov, Yu. V., Vertsner, V. N., Bogdanovskiy, G. A. SOV/48-23-4-18/21

TITLE: Some Constructional Improvements of an Electron Microscope EM-3 (Nekotoryye konstruktivnyye uluchsheniya elektronnogo mikroskopa EM-3)

PERIODICAL: Izvestiya Akademii nauk SSSR. Seriya fizicheskaya, 1959, Vol 23, Nr 4, pp 519 - 521 (USSR)

ABSTRACT: The present paper describes the experiments and results, that were conducted in order to improve the quality of the electron microscope EM-3. It was first of all necessary to increase the resolution and the light output. A new electron gun was developed with an almost punctiform cathode. In order to render the centering of the individual microscope parts easier, a stand was designed with an internal micrometer. A special appliance was designed for the adjustment of the illumination system, which makes the adjustment of the object lens and condenser easier. By employing a new material "Permendyur" instead of Armco iron in the pole shoes the quality of the image was improved. Also the astigmatic variation of the focus upon the optical axis was strongly diminished, thus increasing the resolving power to 30 Å. Work with reflected beam was made possible, and electronographic operations may be carried

Card 1/2

APPROVED FOR RELEASE: 06/12/2000 CIA-RDP86-00513R000308320019-5"

"APPROVED FOR RELEASE: 06/12/2000 CIA-RDP86-00513R000308320019-5



out by removing the projecting lens. The instrument was equipped with a camera and improvements were also made in the high-voltage system. The chromatic aberration was considerably diminished. A binocular microscope of the type BM-51-2 with 9fold magnification was installed. There are 5 figures and 2 Soviet references.



APPROVED FOR RELEASE: 06/12/2000 CIA-RDP86-00513R000308320019-5"

"APPROVED FOR RELEASE: 06/12/2000 CIA-RDP86-00513R000308320019-5

VERTSNER, V.N.; VORONA, Yu.M.; VOROB'YEV, Yu.V.; BOGDANOVSKIY, G.A.; CHENTSOV, Yu.V.

Optics of EM-5 and EM-7 electron microscopes. Izv.AN SSSR.Ser.fiz. 25 no.6:680-682 Je '61. (MIRA 14:6)
(Electron microscope)

APPROVED FOR RELEASE: 06/12/2000 CIA-RDP86-00513R000308320019-5"

"APPROVED FOR RELEASE: 06/12/2000 CIA-RDP86-00513R000308320019-5

9.4140

39166
S/120/62/000/003/034/048
E032/E114

AUTHORS: Chentsov, Yu.V., and Vertsner, V.N.

TITLE: A television method for enhancing the image brightness and contrast in an electron microscope

PERIODICAL: Pribory i tekhnika eksperimenta, no.3, 1962, 148-150

TEXT: The authors report a new method of enhancing the brightness and contrast by means of the direct excitation of the target of a transmitting television tube by the beam of fast electrons which produce the image in an electron microscope. M.E. Haine and P.A. Einstein are said to have carried out similar work in Britain (Proc. Europ. Reg. Conf. Electron Microscopy, Delft, 1, 1960, 97). The fast electrons produce a potential profile on a semiconducting screen (selenium, antimony sulphide and three-component compounds of these materials with arsenic) deposited on a polypropylene film on an aluminium backing. The fast image-producing electron beam of the ЭМ-5 (EM-5) electron microscope was used in conjunction with the commercial television apparatus ПТУ-0-М (PTU-0-M). Best results were obtained with a selenium target. The method has been found to produce a gain in

Card 1/2

APPROVED FOR RELEASE: 06/12/2000 CIA-RDP86-00513R000308320019-5"

"APPROVED FOR RELEASE: 06/12/2000 CIA-RDP86-00513R000308320019-5

A television method for enhancing... S/120/62/000/003/034/048
E032/E114

the magnification, brightness and contrast of the image at a lower current to the target.

ASSOCIATION: Gosudarstvennyy opticheskiy institut (State Optical Institute)

SUBMITTED: July 22, 1961

Card 2/2

APPROVED FOR RELEASE: 06/12/2000 CIA-RDP86-00513R000308320019-5"

"APPROVED FOR RELEASE: 06/12/2000 CIA-RDP86-00513R000308320019-5

VERTSNER, V.N.; CHENTSOV, Yu.V.

Mirror-type scanning electron microscope. Prib. i tekh. eksp. 8 no.5:180-182 S-O '63. (MIRA 16:12)

APPROVED FOR RELEASE: 06/12/2000 CIA-RDP86-00513R000308320019-5"

"APPROVED FOR RELEASE: 06/12/2000 CIA-RDP86-00513R000308320019-5

CHENTSOV, Yu.V.; VERTSNER, V.N.

Television method for increasing brightness and contrast in an electron microscope. Izv. AN SSSR. Ser. fiz. 27 no.9:1207-1209 S '63. (MIRA 16:9)

(Electron microscopy)

APPROVED FOR RELEASE: 06/12/2000 CIA-RDP86-00513R000308320019-5"

"APPROVED FOR RELEASE: 06/12/2000 CIA-RDP86-00513R000308320019-5

ACCESSION NR: AP4042988 S/0051/64/017/001/0125/0128

AUTHORS: Savosina, L. F.; Tsy*kunova, T. M.; Chentsov, Yu. V.

TITLE: Use of electronic outlining to improve the distinguishability of Fresnel rings

SOURCE: Optika i spektroskopiya, v. 17, no. 1, 1964, 125-128

TOPIC TAGS: electron microscope, astigmatism, diffraction analysis, video amplifier

ABSTRACT: The authors describe an electronic circuit for intensifying the outlines of images used in electron microscopes, for the purpose of minimizing astigmatism. The method is based on using a television image amplifier in the electron microscope in lieu of photography to observe the Fresnel rings and other diffraction edge patterns, and on the fact that the information that is used to eliminate the astigmatism is contained essentially in the contours

Card 1/3

APPROVED FOR RELEASE: 06/12/2000 CIA-RDP86-00513R000308320019-5"

"APPROVED FOR RELEASE: 06/12/2000 CIA-RDP86-00513R000308320019-5

ACCESSION NR: AP4042988

of the image. The electronic outlining circuit increases the visibility of the diffraction edges, and operates on the principle of adding the second difference of the video signal (obtained with the aid of an open delay line and a subtracting network to the initial video signal, combined with the use of double limiting. "The authors thank V. N. Vertsner and I. I. Tsukkerman for interest in the work and for many valuable hints. Orig. art. has: 4 figures.

ASSOCIATION: None

SUBMITTED: 18Jul63

ENCL: 01

SUB CODE: EC

NR REF SOV: 001

OTHER: 001

Card 2/3

APPROVED FOR RELEASE: 06/12/2000 CIA-RDP86-00513R000308320019-5"

"APPROVED FOR RELEASE: 06/12/2000 CIA-RDP86-00513R000308320019-5

ACCESSION NR: AP4042988

ENCLOSURE: 01

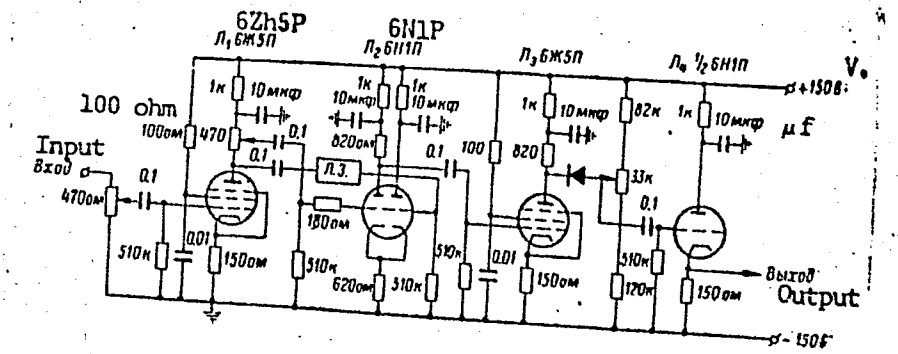


Diagram of video signal outlining block

Card3/3

APPROVED FOR RELEASE: 06/12/2000 CIA-RDP86-00513R000308320019-5"

"APPROVED FOR RELEASE: 06/12/2000 CIA-RDP86-00513R000308320019-5

L 36557-66 EWT(1)/EWT(m)/EWP(t)/ETI IJP(c) AT/JD

ACC NR: AP6015764 (A,N) SOURCE CODE: UR/0048/66/030/005/0778/0780

AUTHOR: Vertsner, V. N.; Lumonov, R. I.; Chentsov, Yu. V.

ORG: none

TITLE: The use of low velocity electrons in an electron scanning microscope /Report, Fifth All-Union Conference on Electron Microscopy held in Sumy 6-8 July 1965/

SOURCE: AN SSSR. Izvdstiya, Seriya fizicheskaya, v. 30, no. 5, 1966, 778-780

TOPIC TAGS: electron microscope, electronic scan, electron beam, electron energy

ABSTRACT: An electron scanning microscope employing an accelerating potential of from 500 to 2000 V has been developed and a pilot model has been constructed. The use of a low accelerating potential entails some deterioration of the resolving power but provides higher sensitivity to small variations of the electric and magnetic fields at the surface of the specimen. The low penetrating power of the low energy probe beam makes it possible to detect very thin films of foreign material on the surface of the specimen. Moreover, the secondary emission coefficient of some insulating materials for low energy incident electrons is close to unity, and it is accordingly possible to study such materials without first coating them with metal. A cross section of the pilot model microscope is shown in the figure. The beam from the electron gun 1 is focused by lenses 2 and 3 onto the specimen 5. The beam is deflected by the windings 4, the currents in which are synchronized with those in the deflection coils of the

Card 1/2

APPROVED FOR RELEASE: 06/12/2000 CIA-RDP86-00513R000308320019-5"

"APPROVED FOR RELEASE: 06/12/2000 CIA-RDP86-00513R000308320019-5

L 36557-66

ACC NR: AP6015764

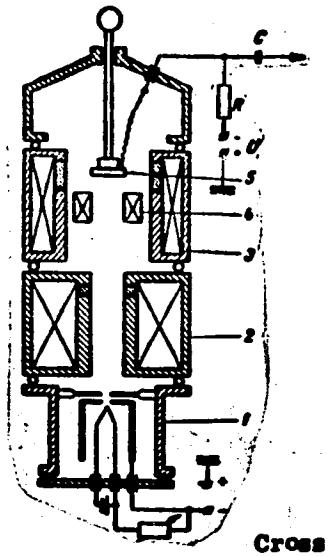


kinescope on which the signal from the specimen, developed across resistor R, is displayed. A decelerating potential can be applied to the specimen holder in order further to decrease the energy of the probe electrons at the specimen. The diameter of the probe beam at the specimen was 1 micron, and the instrument was found to be sensitive to a variation of 0.2 V in the potential at the surface of the specimen. The size of the raster on the specimen could be varied from 12 x 16 mm to 0.3 x 0.4 mm, corresponding to magnifications on the kinescope screen ranging from 17 to 700. Several photographs recorded with the instrument are presented. Orig. art. has: 5 figures.

Cross section of low velocity electron scanning microscope

SUB CODE: 20/ SUBM DATE: 00/ ORIG REF: 001/ OTH REF: 000

Card 2/2 MLP

APPROVED FOR RELEASE: 06/12/2000 CIA-RDP86-00513R000308320019-5"

"APPROVED FOR RELEASE: 06/12/2000 CIA-RDP86-00513R000308320019-5

DEMENT'YEV, L.F.; GLUMOV, I.F.; CHOLOVSKIY, I.P.; CHENTSOVA, G.K.

Method of determining the conditions for calculating petroleum reserves as exemplified by $D_1$ horizon of one of the fields of the Tatar A.S.S.R. Trudy VNII no.36:167-179 '62. (MIRA 15:11)
(Tatar A.S.S.R.--Petroleum geology)

APPROVED FOR RELEASE: 06/12/2000 CIA-RDP86-00513R000308320019-5"

"APPROVED FOR RELEASE: 06/12/2000 CIA-RDP86-00513R000308320019-5

CHENTSOVA, K. I.

CHENTSOVA, K. I. -- "STUDY OF THE WEAR OF BASE RUBBER AND THE DEVELOPMENT OF MORE PRECISE METHODS OF EVALUATING ITS QUALITY." SUB 30 SEP 52, MOSCOW TECHNOLOGICAL INST OF LIGHT INDUSTRY IMENI L. M. KAGANOVICH (DISSERTATION FOR THE DEGREE OF CANDIDATE IN TECHNICAL SCIENCE)

SO: VECHERNAYA MOSKVA, JANUARY-DECEMBER 1952

APPROVED FOR RELEASE: 06/12/2000 CIA-RDP86-00513R000308320019-5"

"APPROVED FOR RELEASE: 06/12/2000 CIA-RDP86-00513R000308320019-5

CHENTSOVA, K.I., kandidat tekhnicheskikh nauk.

Improving shoe lasts. Leg.prom.14 no.3:21-22 Mr '54. (MLRA 7:5)
(Shoe industry)

APPROVED FOR RELEASE: 06/12/2000 CIA-RDP86-00513R000308320019-5"

"APPROVED FOR RELEASE: 06/12/2000 CIA-RDP86-00513R000308320019-5

KOTEL'NIKOV, V.N., kand.tekhn.nauk; CHENTSOVA, K.I., kand.tekhn.nauk; ZYBIN, Yu.P., doktor tekhn.nauk; KOCHETKOVA, T.S.; ZAKATOVA, N.D., kand.tekhn.nauk; GUBAREV, A.S., kand.tekhn.nauk; SHVETSOVA, T.P., inzh.; VOROB'YEVA, A.A., kand.tekhn.nauk; MIRSKIY, V.I., inzh.; NISNEVICH, Ye.A., kand.tekhn.nauk; GOL'DSHTEYN, A.V., inzh.; KALASHNIKOVA, T.A., inzh.; SHUSTOROVICH, M.L., kand.tekhn.nauk; MOHEKHODOV, G.A., inzh.; ZAKHAROV, S.R., retsenzent; BLAGOVESTOV, B.K., retsenzent; STRONGINA, O.P., retsenzent; SHMIDT, M.I., retsenzent; ZUYEV, V.T., retsenzent; KOSAREV, M.I., retsenzent; STEPANOV, I.S., retsenzent; RAMM, S.N., retsenzent; PEVZNER, B.M., retsenzent; VEYNBERG, I.A., retsenzent; TURBIN, A.S., retsenzent, SMIRNOVA, Ye.V., retsenzent; BUGOSLAVSKAYA, L.A., retsenzent; GAMOVA, A.S., retsenzent; KHANIN, N.M., retsenzent; MURVANIDZE, D.S., red.; PLEMYANNIKOV, M.N., red.; GRACHEVA, A.V., red.; MEDVEDEV, L.Ya., tekhn.red.

[Shoemaker's handbook] Spravochnik obuvshchika. Vol.1. Moskva, Gos.nauchno-tekhn.izd-vo lit-ry po legkoi promyshl. 1958. 540 p. (MIRA 12:4)

1.Gosudarstvennaya Ordena Lenina i Ordena Trudovogo Krasnogo Znameni obuvnaya fabrika "Skorokhod" imeni Ya.Kalinina (for Zakharov, Blagovestov, Strongina, Shmidt, Zuyev, Kosarev, Stepanov, Ramm, Pevzner, Veynberg, Turbin, Smirnova, Bugoslavskaya, Gamova, Khanin).
(Shoe manufacture)

APPROVED FOR RELEASE: 06/12/2000 CIA-RDP86-00513R000308320019-5"

"APPROVED FOR RELEASE: 06/12/2000 CIA-RDP86-00513R000308320019-5

CHENTSOVA, K.I., kand.tekhn.nauk

Second international conference on efficient footwear. Leg.prom. 18 no.12:52-53 D '58. (MIRA 11:12)
(Shoe industry)

APPROVED FOR RELEASE: 06/12/2000 CIA-RDP86-00513R000308320019-5"

"APPROVED FOR RELEASE: 06/12/2000 CIA-RDP86-00513R000308320019-5

CHENTSOVA, K.I., kand.tekhn.nauk

Developing principles of the design of the shape and size for mass produced footwear. Nauch.-issl. trudy TSNIKP no. 30:126-131 '59. (MIRA 14:5)

(Shoe manufacture)

APPROVED FOR RELEASE: 06/12/2000 CIA-RDP86-00513R000308320019-5"

"APPROVED FOR RELEASE: 06/12/2000 CIA-RDP86-00513R000308320019-5

CHENTSOVA, K.I., kand.tekhn.nauk

New method of numbering the lasts. Kozh.-obuv.prom. 3 no.12:10-13 D '61. (MIRA 15:1)

(Boots and shoes)

APPROVED FOR RELEASE: 06/12/2000 CIA-RDP86-00513R000308320019-5"

"APPROVED FOR RELEASE: 06/12/2000 CIA-RDP86-00513R000308320019-5

CHENTSOVA, K.I.; VOLKOV-DUBROVIN, V.P.; LEVINA-SHCHIRINA, E.S.

Study of the soles of the population taking age and profession into consideration. Nauch.-issl. trudy TSNIKP no.33:96-106 '63 (MIRA 18:1)

APPROVED FOR RELEASE: 06/12/2000 CIA-RDP86-00513R000308320019-5"

"APPROVED FOR RELEASE: 06/12/2000 CIA-RDP86-00513R000308320019-5

CHENTSOVA, K.I.; KAREVA, V.Ye.

Present-day requirements for heels. Kozh.-obuv. prom. 6 no.4:29-31 Ap'64. (MIRA 17:5)

APPROVED FOR RELEASE: 06/12/2000 CIA-RDP86-00513R000308320019-5"

"APPROVED FOR RELEASE: 06/12/2000 CIA-RDP86-00513R000308320019-5

CHENTSOVA, K.I.

Lasts for the shoe industry made from synthetic materials. Kozh.-obuv. prom. 6 no.8:26-27 Ag '64. (MIRA 17:10)

APPROVED FOR RELEASE: 06/12/2000 CIA-RDP86-00513R000308320019-5"

"APPROVED FOR RELEASE: 06/12/2000 CIA-RDP86-00513R000308320019-5

CHENTSOVA, L.

What the analysis of title records shows. Fin. SSSR 21 no.9:57-58 S '60. (MIRA 13:9)

1. Upravlyayushchiy Novorossiyskim otdeleniyem Stroybanka.
(Novorossiysk--Banks and banking)
(Novorossiysk--Construction industry--Finance)

APPROVED FOR RELEASE: 06/12/2000 CIA-RDP86-00513R000308320019-5"

"APPROVED FOR RELEASE: 06/12/2000 CIA-RDP86-00513R000308320019-5

CHENTSOVA, L.

Faulty planning. Fin. SSSR 23 no.3:70-73 Mr '62. (MIRA 15:3)

1. Upravlyayushchiy Novorossiyskim otdeleniyem Stroybanka.
(Novorossiysk--Construction industry)

APPROVED FOR RELEASE: 06/12/2000 CIA-RDP86-00513R000308320019-5"

"APPROVED FOR RELEASE: 06/12/2000 CIA-RDP86-00513R000308320019-5

CHENTSOVA, L. G.

"Heats of Transformation in the System of Wurtziet-Sphalerite and Cinnabar-Metacinnabarite," Dok. AN, 30, No. 6, 1941. Lab. Phys. Chem. Inst. Econ. Mineral., 1941.

APPROVED FOR RELEASE: 06/12/2000 CIA-RDP86-00513R000308320019-5"

"APPROVED FOR RELEASE: 06/12/2000 CIA-RDP86-00513R000308320019-5

CHENTSOVA, L. G.

PROCESSES AND PROPERTIES INDEX

**Thermal discoloration of smoky quartz.** N. E. Vedeneeva and L. G. Chentsova. *Compt. rend. acad. sci. U.R.S.S.* 55, 437-40(1947)(in English).—A decrease in optical d. in the visible spectrum was used as a measure of the loss of coloration centers. Where measurements were made with nonpolarized light or with the extraordinary ray, stability of the absorption curve was controlled. A Pulfrich photometer was used. About 160 absorption curves and 50 discoloration curves were measured, with 9 different quartz specimens. The relative speed of discoloration for a given temp. varies with different crystals, even with adjacent portions of the same crystal, and with the heating time. There is no simple relation between the discoloration rate and the original color intensity, an originally dark area may become lighter than another light-colored area treated identically. On many discoloration curves, portions show a linear dependence of log $d_\lambda$ on time. When such curves are plotted, with varied wave lengths of nonpolarized light, the straight portions form a series of parallel lines; this shows stability of the quartz spectrum during heating. In no case is there evidence of a bimol. reaction of decompn. In many cases the decay follows the exponential law, and $D_\lambda = D_1e^{-a_1t} + D_2e^{-a_2t}$; with $a_1/a_2 >$ 10 being usual. In some specimens the loss of color centers is pronounced at 180° (where artificial coloration is discharged). The fading of the smoky color in quartz is undoubtedly related to some lattice defects, probably the existence of active centers (foreign ions) of different thermal stability in suitable energy levels. E. W. Claffy

5

Inst. Crystallography, AS USSR.

ASM-SLA METALLURGICAL LITERATURE CLASSIFICATION

APPROVED FOR RELEASE: 06/12/2000 CIA-RDP86-00513R000308320019-5"

"APPROVED FOR RELEASE: 06/12/2000 CIA-RDP86-00513R000308320019-5

CH CHENTSOVA, L. G.

**Nature of inclusions in the structure of smoky quartz.** L. G. Chentsova and N. E. Veleneeva (Akad. Nauk. S.S.S.R.). *Doklady Akad. Nauk S.S.S.R.* **68**, 395-8 (1949). The ionic cond. of quartz above 300° is caused by the migration of small ions (Li, Na) along structural channels in the *c*-axis. Ch. and V. measured the current intensity-time curves (at 400 v.) at 300°. The samples were a dark Volhynian morion. Characteristic is the steep decrease of current intensity with time, down to only about 1 milliamp. After the electrolysis, the samples were irradiated with x-rays which brought about an intense re-coloring all over the cathode surface, while on the anode side only the form of the anode electrode was copied, colorless on the dark background. If the sample was oriented at an angle to the *c*-axis, the colorless anodic spots correspond to the migration of the ions in directions different from the *c*-axis, and under an increased field-potential, analogous to previous measurements of Pershits (*C.A.* 42, 8022). The introduction of $Li^+$ in the quartz structure along the *c*-axis brought about an enormous increase of the conductance in samples cut perpendicular to the *c*-axis, but if the provision of $Li^+$ ions is exhausted, the current intensity rapidly decreases. The free Li metal corrodes the quartz violently on the cathode side. The introduced Li does not influence the discoloring of the quartz in any way. Crystals which are uncolored in nature, are also not colored after the introduction of Li. The coloring phenomenon is apparently brought about by ions of a considerably lower mobility in the structure for which the

APPROVED FOR RELEASE: 06/12/2000 CIA-RDP86-00513R000308320019-5"

"APPROVED FOR RELEASE: 06/12/2000 CIA-RDP86-00513R000308320019-5

calcn. gives an av. distance in the channels of $10^8$ A. There is no trace even of an anionic mobility, which was previously discussed by Ioffe (*Izvest. Politekh. Inst.* 24 (1915).

W. Eitel

APPROVED FOR RELEASE: 06/12/2000 CIA-RDP86-00513R000308320019-5"

"APPROVED FOR RELEASE: 06/12/2000 CIA-RDP86-00513R000308320019-5

CHENTSOVA, L. G.

"Investigation of the Coloration Nature of Smoky Quartz on the Basis of the Phenomena of Thermal Fading and Electric Conductivity." Thesis for degree of Cand. Physico-Mathematical Sci. Sub 28 Jun 50, Inst of Crystallography, Acad Sci USSR

Summary 71, 4 Sep 52, Dissertations Presented for Degrees in Science and Engineering in Moscow in 1950. From Vecherniyaya Moskva, Jan-Dec 1950.

APPROVED FOR RELEASE: 06/12/2000 CIA-RDP86-00513R000308320019-5"

"APPROVED FOR RELEASE: 06/12/2000 CIA-RDP86-00513R000308320019-5

CHENTSOVA L.G.

Nature of the color of smoky quartz investigated by thermal bleaching

[illegible]

color centers had variable [illegible] although the absorption [illegible]

which are stable [illegible] plotted for the centers [illegible] correspond [illegible] ponential functions [illegible] the disintegration of 2 groups of centers [illegible] and [illegible] comparison of the exp[illegible] quartz sample from different occurrences (Volhynia, Murzinka, Maidan-Tal, Adun-Cholong) make it [illegible] that, in the limits of error, the life[illegible] in every special case and [illegible] or artificial [illegible] one and the [illegible] relative concn. in the [illegible] color centers are created [illegible] removal of electrons from the crystal structure of the [illegible] they are fixed in levels of variable [illegible] and nature of foreign matter [illegible]

SMW (1)

APPROVED FOR RELEASE: 06/12/2000 CIA-RDP86-00513R000308320019-5"

"APPROVED FOR RELEASE: 06/12/2000 CIA-RDP86-00513R000308320019-5

CHENTSOVA L G

Ionic conductance and the [illegible] color in smoky quartz [illegible]

[illegible]

crystal structure [illegible]

the channels of [illegible]

for the coloring by irradiation [illegible] ions, and also [illegible] ions, do not activate the luminescence of crystal phosphors. In smoky quartz the thermoluminescence and the color phenomena are not mutually [illegible] W. Eitel

APPROVED FOR RELEASE: 06/12/2000 CIA-RDP86-00513R000308320019-5"

"APPROVED FOR RELEASE: 06/12/2000 CIA-RDP86-00513R000308320019-5

CHENTSOVA, L. G. PA 245T99

USSR/Physics - Crystallography 11 Nov 52

"The Nature of Activators in Quartz Lattice,"
N. Ye. Vedeneyeva and L. G. Chentsova

"Dok Ak Nauk SSSR" Vol 87, No 2, pp 197-199

Find that, by observing the form of the pure layer in plates cut at an angle to the optical axis, one can see the motion of ions in alpha-quartz in the direction of its structural channels, that is, along the c axis. State that quartz is characterized by the phenomena of thermo- and cathodo-luminescence. Submitted by Acad G. S. Landsberg 15 Sep 52.

245T99

APPROVED FOR RELEASE: 06/12/2000 CIA-RDP86-00513R000308320019-5"

"APPROVED FOR RELEASE: 06/12/2000 CIA-RDP86-00513R000308320019-5

**Physical Properties of Synthetic Corundum.** Symposium (Fizicheskie Svoistva Sinteticheskogo Korunda). Edited by A. V. Shubnikov, M. V. Klassen-Neklyudova, and S. V. Grum-Grzhimaĭlo. *Trudy Inst. Kryst. Akad. Nauk S.S.S.R.*, No. 8, 356 pp. (1953). Price R10.—The symposium was held in 1950 to give to the synthetic corundum industry a complete survey of the methods and results of scientific investigations, especially concerning optical and mechanical properties. The boule has been chiefly studied because an accurate knowledge of crystallographic orientation is the basis of every working process. The optical characteristics and structural properties of real (mosaic) crystals are therefore emphasized. The instruments used for the investigations are partly newly constructed and may be particularly recommended for studies of the physical properties of monocrystals other than those of synthetic corundum. References are given with each paper. **Results of laboratory research on different properties of synthetic corundum crystals.** S. V. Grum-Grzhimaĭlo and M. V. Klassen-Neklyudova. *Ibid.*, pp. 5–12.—The influence of impurities, e.g., $Cr_2O_3$, MgO, $SiO_2$, $Fe_2O_3$, $TiO_2$, $V_2O_5$, CaO, MnO, and CuO, is discussed. **Basic facts of the crystallography and structure of corundum crystals.** E. S. Rudnitskaya. *Ibid.*, pp. 13–20. **Thermal constants of $\alpha$-$Al_2O_3$.** L. G. Chentsova. *Ibid.*, pp. 21–26.—Thermochemical data are compiled. **Properties of isomorphous mixes of $Al_2O_3$ and $Cr_2O_3$.** S. V. Grum-Grzhimaĭlo. *Ibid.*, pp. 27–34.—The dimensions of the elementary cells and the fusion points of the crystalline solutions are given, together with data on densities and refractive indices, absorption spectra, and pleochroic phenomena. **Densities of synthetic corundum, especially the effects of crystalline solutions with $Cr_2O_3$.** E. N. Slavinova and L. N. Sonin. *Ibid.*, pp. 35–40. **Short review of the electrical properties of corundum.** I. M. Sil'vestrova. *Ibid.*, pp. 41–42.—Conductance as a function of temperature for white sapphire and the resistance of ceramic corundum bodies are discussed. **Cr content of rubies.** P. I. Pashkovskaya. *Ibid.*, pp. 43–46.—Analytical data are given on the introduction of $Cr_2O_3$ into synthetic corundum from $(NH_4)_2Cr_2O_7$, and special effects of small additions of CaO and MgO (from sulfates) on the color of rubies are described. **Cr content of the batch and of synthetic ruby.** A. A. Kiselev and L. M. Dolgova. *Ibid.*, pp. 47–50.—The losses in $Cr_2O_3$ from the batch to the powder and the finished ruby composition are discussed. **Data on spectral analysis of corundum.** S. V. Grum-Grzhimaĭlo. *Ibid.*, pp. 51–55.—Domestic synthetic sapphires are compared with foreign products. The Russian samples are purer, containing less Fe, Cu, and Ca; foreign synthetic corundum products often contain Ti and V, and two samples showed Na. Only Cr and Mn are higher in domestic corundum products than in the foreign material. **Measurement of the refractive indices of synthetic corundum and of corundum batches.** N. M. Melankholin. *Ibid.*, pp. 57–76.—The immersion method of I. V. Obreimov (1919) for the determination of very small changes in refractive index is described. **Problems of the heating of corundum batches.** E. G. Valyashko, A. A. Kiselev, and V. A. Linitskiĭ. *Ibid.*, pp. 77–88.—Special studies were made on the transition of $\gamma$-$Al_2O_3$, formed from alum, to corundum with increasing temperature and time of heat exposure,

over

APPROVED FOR RELEASE: 06/12/2000 CIA-RDP86-00513R000308320019-5"

"APPROVED FOR RELEASE: 06/12/2000 CIA-RDP86-00513R000308320019-5

CHENTSOVA, L.G.

Thermal constants of α-aluminum oxide. Trudy Inst.krist. no.8: 21-26 '53. (MLRA 7:5)
(Corundum)

APPROVED FOR RELEASE: 06/12/2000 CIA-RDP86-00513R000308320019-5"

"APPROVED FOR RELEASE: 06/12/2000 CIA-RDP86-00513R000308320019-5

CHENTSOVA, L.G.,

"Spectra of Smoked Quartz With F-Centers of Varying Thermal Stability," by L. G. Chentsova, Tr. In-ta kristallogr. An SSSR, No 11, 1955, pp 195-199 (from Referativnyy Zhurnal-Fizika, No 10, Oct 56, Abstract No 29779)

The absorption spectra of quartz specimens from the Volynsk deposits were studied in polarized light. Smoked quartz has two partially overlapping bands: in the visible part (between 380 and 480 mμ) and in the ultraviolet part. During heating, the absorption in the ultraviolet band decreases much slower than in the visible band. Natural smoked quartzes are relatively richer in stable centers. The absorption spectrum of quartz dyed by X rays after a partial thermal decoloring is close to the spectrum of natural specimens. Specimens colored by X rays at 150° have absorption bands in ultraviolet range of higher intensity than those colored at 20°. Specimens colored at 20° did not exhibit, after long storage (about 1.5 years), a conversion of F-centers into more stable ones.

SUM. 1287

APPROVED FOR RELEASE: 06/12/2000 CIA-RDP86-00513R000308320019-5"

"APPROVED FOR RELEASE: 06/12/2000 CIA-RDP86-00513R000308320019-5

CHENTSOVA, L. G.

8277. ON THE QUESTION OF THE NATURE OF THE COLOUR CENTRES OF [illegible] L. G. Chentsova.

Kristal[illegible] 1955. In Russian

Re[illegible] also some of the effects observed when an [illegible] through a noisy quartz

R. F. S. Hearmon

FM

MT

APPROVED FOR RELEASE: 06/12/2000 CIA-RDP86-00513R000308320019-5"

"APPROVED FOR RELEASE: 06/12/2000 CIA-RDP86-00513R000308320019-5

Chentsova, L. G.

51-6-10/25

AUTHORS: Chentsova, L. G., Grechushnikov, B. N., and Batrak, Ye. N.

TITLE: Investigation of Temperature Stimulation of Crystalline Quartz Excited with X-Rays. (Issledovaniye temperaturnogo vysvechivaniya kristallicheskogo kvartsa, vozbuzhdennogo rentgenovymi luchami.)

PERIODICAL: Optika i Spektroskopiya, 1957, Vol. III, Nr. 6, pp. 619-623. (USSR)

ABSTRACT: N.E. Vedenéyeva and G.G. Lemmleyn found that the samples of quartz which luminesce strongly can be coloured intensively by the action of X-rays. The identity of the colour centres and the capture centres which produce thermoluminescence in melted quartz was proved by Lautout (Ref.1). There are two points of view on the nature of capture centres. In the opinion of Yokota (Ref.2) the capture centres are due to oxygen defects. Other workers ascribe colouring on irradiation to the presence of impurities in quartz which are in atomic-disperse state. The authors investigated properties of samples of natural

Card 1/4

APPROVED FOR RELEASE: 06/12/2000 CIA-RDP86-00513R000308320019-5"

"APPROVED FOR RELEASE: 06/12/2000 CIA-RDP86-00513R000308320019-5



Investigation of Temperature Stimulation of Crystalline Quartz Excited with X-Rays.

crystals from several places of origin. These crystals are: (A) Quartz from Volhynia, which can be intensely coloured by X-rays. (B) Quartz from South Urals, which is more difficult to colour. (V) Quartz from Polar Urals, and (G) Quartz from Aldan - samples of the latter two groups can be only weakly coloured by X-rays. (D) Quartz from Elba, which cannot be coloured by the action of X-rays. All samples were heated to 400°C and then irradiated with 180 kV X-rays. Stimulation was produced by uniform increase of temperature (2 deg/min). Fig.1 shows the thermoluminescence curves for X-irradiated quartz A (curve 1 - 1 hour's irradiation, curve 2 - 2 hours', curve 3 - 6 hours'). On all the curves of Fig.1 clear maxima appear at 175 and 290°C. Fig.2 shows similar curves for samples of quartz A and quartz B, irradiated with X-rays for 3 hours. The maximum at 175°C is much stronger in quartz B.



APPROVED FOR RELEASE: 06/12/2000 CIA-RDP86-00513R000308320019-5"

"APPROVED FOR RELEASE: 06/12/2000 CIA-RDP86-00513R000308320019-5



Investigation of Temperature Stimulation of Crystalline Quartz Excited with X-Rays.

Fig.3 shows the thermoluminescence of samples of quartz V and G subjected to 30 hours of irradiation. Quartz V has an inflection around 175°C, and a wide maximum at about 280°C. Quartz G has several maxima. Samples cut from two portions of the same crystal G, separated by a crack, have quite different thermoluminescence curves (Fig.4). Heating of uncoloured quartz D did not produce any emission. In the opinion of the present authors the differences between thermoluminescence curves of quartz from various places of origin support the impurity hypothesis on the nature of capture centres. Quartz possesses structural channels (pores) along the C-axis: when ions of $Li^+$ and $Na^+$ are introduced into these channels by electrodiffusion, quartz does not lose its ability to be coloured on X-irradiation. Fig.5, curve 1 gives thermoluminescence of quartz A before introduction of foreign ions; curve 2 represents the same quartz with $Li^+$ ions, and curve 3 - the same quartz with $Na^+$ ions. In each case the sample was irradiated



APPROVED FOR RELEASE: 06/12/2000 CIA-RDP86-00513R000308320019-5"

"APPROVED FOR RELEASE: 06/12/2000 CIA-RDP86-00513R000308320019-5

51-6-10/25

Investigation of Temperature Stimulation of Crystalline Quartz Excited with X-Rays.

for 6 hours. Introduction of $Li^+$ ions strengthens the 175°C maximum, while introduction of $Na^+$ destroys the 175°C maximum and depresses the 290°C maximum. It follows that the depth of the capture centres producing thermoluminescence is affected by ions such as $Li^+$ and $Na^+$. There are 5 figures and 6 references, of which 1 is Russian, 4 English and 1 French.

ASSOCIATION: Institute of Crystallography, Academy of Sciences of the USSR. (Institut kristallografii AN SSSR)

SUBMITTED: February 11, 1957.

AVAILABLE: Library of Congress.

Card 4/4

APPROVED FOR RELEASE: 06/12/2000 CIA-RDP86-00513R000308320019-5"

"APPROVED FOR RELEASE: 06/12/2000 CIA-RDP86-00513R000308320019-5

48-5-30/56

SUBJECT: USSR/Luminescence

AUTHORS: Chentsova, L.G., Grechushnikov, B.N. and Batrak, Ye.N.

TITLE: Investigation of Temperature De-Luminescence of Crystalline Quartz Excited by X-Rays (Issledovaniye temperaturnogo vysvechivaniya kristallicheskogo kvartsa, vozbuzhdennogo rentgenovymi luchami)

PERIODICAL: Izvestiya Akademii Nauk SSSR, Seriya Fizicheskaya, 1957, Vol 21, #5, pp 699-700 (USSR)

ABSTRACT: The temperature de-luminescence of natural quartz samples from different formation sites was investigated. The curves of samples taken from different sites differ both in intensity of luminescence and in the number and temperature of peaks. This difference indicates the different nature of admixture ions which induce the formation of capture centers.

Alkali "compensating" ions, which presumably are located in the structural channels of quartz, affect the thermal de-luminescence.

The experiments carried out have shown that after migration of

Card 1/2

APPROVED FOR RELEASE: 06/12/2000 CIA-RDP86-00513R000308320019-5"

"APPROVED FOR RELEASE: 06/12/2000 CIA-RDP86-00513R000308320019-5

48-5-3-/56

TITLE: Investigation of Temperature De-Luminescence of Crystalline Quartz Excited by X-Rays (Issledovaniye temperaturnogo vysvechivaniya kristallicheskogo kvartsa, vozbuzhdennogo rentgenovymi luchami)

$Li^+$- and $Na^+$-ions through quartz, they did not lose their ability of being colored by irradiation. Absorption spectra of the samples subjected to roentgenization after the introduction of $Li^+$ and $Na^+$ are very similar, whereas their curves of thermal de-luminescence differ considerably.

The investigation performed has thereby shown that admixture ions, which create charge defects in the crystalline lattice, and ions compensating these defects played an essential role in the formation of capture centers.
The report was followed by a discussion.
One Russian reference is cited.

INSTITUTION: Institute of Crystallography of the USSR Academy of Sciences

PRESENTED BY:

SUBMITTED: No date indicated

AVAILABLE: At the Library of Congress.

Card 2/2

APPROVED FOR RELEASE: 06/12/2000 CIA-RDP86-00513R000308320019-5"

"APPROVED FOR RELEASE: 06/12/2000 CIA-RDP86-00513R000308320019-5

CHENTSOVA, L. G.

24(2) PHASE I BOOK EXPLOITATION SOV/2353

Akademiya nauk SSSR. Institut kristallografii

Rost kristallov, tom. 2 (Growth of Crystals, Vol. 2) Moscow, 1959. 238 p. Errata slip inserted. 2,000 copies printed.

Resp. Eds.: A. V. Shubnikov, Academician, and N. N. Sheftal', Doctor of Geological and Mineralogical Sciences; Ed. of Publishing House: K. S. Aleksandrov; Tech. Ed.: T. V. Polyakova.

PURPOSE: This book is intended for scientists and researchers engaged in crystallography and in growing industrial monocrystals.

COVERAGE: This is the second of two volumes on crystal growth. The first volume contained reports delivered at the First Congress on Crystal Growth. The present volume also contains an extensive study of corundum synthesis by S. K. Popov [deceased]. These studies reflect the development of Soviet research in crystallography in the period following the first congress. The studies contain some essentially new results obtained by Soviet scientists. The editors express the hope that these studies will unite the efforts of Soviet scientists engaged in studying the process of crystal growth and in growing industrially valuable monocrystals. No personalities are mentioned. References are given at the end of each article.


Tsinsker, L. I., L. G. Chentsova, and A. A. Shternberg. The Green and Brown Tint of Synthetic Quartz Crystals 61

Kamentsev, I. Ye. Crystallization of KJ on a Biotite and Muscovite Surface 68

Belyustin, A. V. Possibility of Determining Surface Energy of Crystals From Equilibrium States 70

II. GROWING OF MONOCRYSTALS (APPARATUS, METHODS, SUPPLEMENTARY WORK)

Kachpar, Yan. Growing of Calcite and of Other Carbonates 73

Spendiarov, N. N., and B. S. Aleksandrov. Growing of Anthracene Monocrystals 78

Popova, A. A. Orientation of Monocrystals of Certain Ferrites 84

Timofeyeva, V. A., and A. V. Zaleskiy. Crystallization of Ferrites From Liquid and Gas Phases 88

Timofeyeva, V. A. Studying the Process of Barium Titanate Crystal Growth in a Fused Solution With Barium Chloride 95

Belyarov, L. M., G. S. Belikova, and G. F. Dobrzhanskiy. Apparatus for Growing Organic Crystals From a Melt 102

Bakuka, S. S. New Type of Pistonless Compressor for the Production of Extremely High Gas Pressures 105

Chernakov, A. A. Growing of a Benzophenone Crystal and Its Morphological Symmetry 109

Simyukova, I. A., and I. V. Stepanov. Synthesis of Extrapure Salts of Calcium Fluoride and Barium Fluoride for Growing Optical Monocrystals 115

Kokorish, Yo. Yu. Effect of Cooling Conditions on the Creation of Dislocations on the Creation of Dislocations in Germanium Crystals 120

Rez, I. S., and L. A. Varfolomeyeva. Guanidine-aluminum sulfate-hexahydrate (Synthesis, Growing of Monocrystals, and some Properties of the Monocrystals) 126

Kokorish, N. P. Crystallization of Germanium on Silicon and Silicon on Germanium 132

Popov, S. K. Growing and Certain Uses of Corundum Crystals 140

III. SURVEYS AND DISCUSSION ARTICLES

Kokorish, Yo. Yu. Dislocation in Germanium Crystals (Survey) 211

Slavnova, Ye. N. Main Trends in the Study of Mixed Systems: Inorganic Crystals - Organic Admixture (Survey) 223

AVAILABLE: Library of Congress


25

APPROVED FOR RELEASE: 06/12/2000 CIA-RDP86-00513R000308320019-5"

"APPROVED FOR RELEASE: 06/12/2000 CIA-RDP86-00513R000308320019-5

SOV/70-4-4-34/34

AUTHORS: Tsinober, L.I. and Chentsova, L.G.

TITLE: Synthetic Quartz with Amethyst Coloration

PERIODICAL: Kristallografiya, 1959, Vol 4, Nr 4, pp 633-635 (USSR)

ABSTRACT: It has earlier been shown that synthetic quartz, grown from $K_2CO_3$ solution can be coloured green or brown by $Fe^{2+}$ and $Fe^{3+}$ ions. This may happen by corrosion of the steel container used. All $Fe^{2+}$ ions are sited in the crystal as colloidal impurities and give the green colour. The brown of the $Fe^{3+}$ ions is somewhat dichroic and therefore structural. Various faces are coloured differently. The rhombohedra ⟨R⟩ and ⟨r⟩ readily take on a smoky colour under the action of X-rays. The influence of radiation on crystals grown from $K_2CO_3$ solution with considerable iron was studied.
Polished plates, cut parallel to $11\bar{2}0$ were irradiated with a TRTs-3 tube (W-anode, 80 kV, 200 mA) for 30-60 min, ($1.35 - 2.7 \times 10^6$ rads). The positive rhombohedral faces were coloured amethyst; the pyramidal faces of the negative

Card1/3

APPROVED FOR RELEASE: 06/12/2000 CIA-RDP86-00513R000308320019-5"

"APPROVED FOR RELEASE: 06/12/2000 CIA-RDP86-00513R000308320019-5



rhombohedron became smoky with a violet tinge but the brown and green of the pyramid of growth of the pinacoid ⟨c⟩ were unaffected. Absorption spectra were recorded and spectral analysis gave the iron content material from each growth pyramid as follows:

| | | |
|---|---|---|
| ⟨R⟩ | 0.0040% $Fe_2O_3$ | Amethyst after irradiation |
| ⟨r⟩ | 0.0047% $Fe_2O_3$ | Mixed amethyst and smoky after irradiation |
| ⟨c⟩ | 0.0080% $Fe_2O_3$ | Brown |
| ⟨c⟩ | 0.025% $Fe_2O_3$ | Green |
| ⟨r⟩ | 0.0005% $Fe_2O_3$ | Smoky after irradiation . |

The Fe content for $K_2CO_3$-produced specimens was some 10X greater than for $Na_2CO_3$-produced crystals. The view of Kats and Stevels (Ref 6) that the amethyst colour is



APPROVED FOR RELEASE: 06/12/2000 CIA-RDP86-00513R000308320019-5"

"APPROVED FOR RELEASE: 06/12/2000 CIA-RDP86-00513R000308320019-5

SOV/70-4-4-34/34

Synthetic Quartz with Amethyst Coloration

due to colour centres, analogous to the centres in smoky quartz, with $Fe^{3+}$ taking the role of $Al^{3+}$, is confirmed.
There are 2 figures, 1 table and 6 references, of which 3 are Soviet, 2 English and 1 German.

ASSOCIATIONS: Vsesoyuznyy nauchno-issledovatel'skiy institut p'yezooptcheskogo mineral'nogo syr'ya (All-Union Scientific Research Institute for Piezo-optical Mineral Resources)
Institut kristallografii AN SSSR (Institute of Crystallography of the Ac.Sc., USSR)

SUBMITTED: April 29, 1959

Card 3/3

USCOMM-DC-61,798

APPROVED FOR RELEASE: 06/12/2000 CIA-RDP86-00513R000308320019-5"

"APPROVED FOR RELEASE: 06/12/2000 CIA-RDP86-00513R000308320019-5

S/070/63/008/002/013/017
E021/E120

AUTHORS: Tsincber L.I., and Chentsova L.G.

TITLE: The nature of the smoky color in crystals of synthetic quartz

PERIODICAL: Kristallografiya, v.8, no.2, 1963, 280-283

TEXT: Some experiments were first carried out on natural quartz. No marked displacement of the absorption maxima in the visible region was observed when sodium ions were substituted for lithium. Attempts to introduce potassium ions were unsuccessful. Attention was then turned to synthetic quartz grown from solutions of sodium or potassium carbonate and therefore containing only sodium or potassium ions. The crystals were grown in an autoclave and exposed to X-radiation in a ТРЦ-3 (TRTs-3) apparatus with a tungsten anticathode at 200 mA and 80 kV. None of the crystals grown from potash was noticeably colored. When sodium or potassium carbonate containing an impurity of germanium was used, however, a different result was obtained. Absorption spectra were measured in the region 220 - 1100 mμ. In these samples, the maxima at 460 and 625 mμ were less sharply defined than usual and



APPROVED FOR RELEASE: 06/12/2000 CIA-RDP86-00513R000308320019-5"

"APPROVED FOR RELEASE: 06/12/2000 CIA-RDP86-00513R000308320019-5



there was a maximum at 285 mμ resulting from the impurity germanium. Evidently the isomorphous impurity germanium, as it were, "loosens" the structure of quartz so that it is possible to introduce the large potassium ions (in comparison with sodium) into quartz and therefore to form potential centers of smoky color.

There are 2 figures.

ASSOCIATION: Institut kristallografii AN SSSR (Institute of Crystallography, AS USSR)

SUBMITTED: September 3, 1962



APPROVED FOR RELEASE: 06/12/2000 CIA-RDP86-00513R000308320019-5"

"APPROVED FOR RELEASE: 06/12/2000 CIA-RDP86-00513R000308320019-5

L 26742-66 EWP(e)/EWT(m) WH

ACC NR: AP6011467 SOURCE CODE: UR/0070/66/011/002/0236/0244

61
60
B

AUTHOR: Chentsova, L. G.; Tsinober, L. I.; Samoylovich, M. I.

ORG: Institute of Crystallography, AN SSSR (Institut kristallografii AN SSSR)

TITLE: Investigation of quartz with amethyst color

SOURCE: Kristallografiya, v. 11, no. 2, 1966, 236-244

TOPIC TAGS: quartz, color center, optic property, electron paramagnetic resonance, crystal lattice defect, heat effect

ABSTRACT: To obtain more information on the nature of the amethyst coloring of quartz, the authors investigated the morphology and certain optical and paramagnetic properties of artificial quartz with amethyst color. In addition, the EPR spectra of both synthetic and natural amethyst were determined. The crystal growth procedure was described in an earlier paper (Kristallografiya, v. 4, No. 4, 633-635, 1959). The amethyst coloring was produced by bombarding the synthetic crystals with x-rays from a TRTs-3 tube at 1500 r/sec. The coloring was usually complete after 20 minutes of exposure. The effect of heating the sample to different temperatures (390, 450, 510C) was tested and it was found that the defects causing the amethyst color centers change at temperatures above 500C. The role of different chemical elements entering in the crystal and their influence on the coloring is discussed. The results point to the conclusion that the amethyst color centers are probably $Fe^{3+}$ ions replacing the $Si^{4+}$ ions in conjunction with various lattice defects, particularly alkaline-metal

UDC: 548.0: 535.66

Card 1/2

APPROVED FOR RELEASE: 06/12/2000 CIA-RDP86-00513R000308320019-5"

"APPROVED FOR RELEASE: 06/12/2000 CIA-RDP86-00513R000308320019-5

L 26742-66

ACC NR: AP6011467

ions in the interstices. Other possible interpretations of the cause of the coloring are briefly mentioned. The authors thank A. I. Novozhilov for help with the measurements of the EPR spectra. Orig. art. has: 5 figures, 1 formula, and 1 table.

SUB CODE: 20/ SUBM DATE: 03Feb65/ ORIG REF: 007/ OTH REF: 021

Card 2/2

APPROVED FOR RELEASE: 06/12/2000 CIA-RDP86-00513R000308320019-5"

"APPROVED FOR RELEASE: 06/12/2000 CIA-RDP86-00513R000308320019-5

CHENTSOVA, M.A.

2100. The photocolorimetric determination of copper in platinum - copper and palladium - silver - copper alloys. M. A. Chentsova, V. G. Levian and M. P. Yufa. *Tzv. Sektora Platiny, I.O.N.Kh. Akad. Nauk, SSSR*, 1955, (32), 59-60; *Ref. Zhur. Khim.*, 1956, Abstr. No. 51 107.—Copper is determined by the intensity of the colour of the Cu - aq. $NH_3$ complex; Pd and Ag do not interfere; Pt is decolorised by the action of $NaHSO_3$ at pH 5. To analyse the Pt - Cu alloys, dissolve the sample (0·3 g) in aqua regia (20 ml), evaporate to 0·5 ml and dilute to 10 ml; add 25% $NaHSO_3$ soln. (10 ml), and after 10 min. add 25% aq. $NH_3$ (20 ml); filter, dilute the filtrate to 100 ml and measure the extinction with a red filter in a 5 cm. cell. A calibration curve is used for 1 to 6% Cu and a comparison method for higher percentages. To analyse Pd - Ag - Cu alloys dissolve the sample (0·1 g) in 50% $HNO_3$ (10 ml), [illegible] $NH_3$ (20 ml), filter, dilute the filtrate [illegible] and measure the extinction. The relative error is 3%.

C. D. Kopkin

Chem 5

APPROVED FOR RELEASE: 06/12/2000 CIA-RDP86-00513R000308320019-5"

"APPROVED FOR RELEASE: 06/12/2000 CIA-RDP86-00513R000308320019-5

18(6) PHASE I BOOK EXPLOITATION SOV/3199

Akademiya nauk SSSR. Institut obshchey i neorganicheskoy khimii im. N. S. Kurnakova

Analiz blagorodnykh metallov (Analysis of Noble Metals) Moscow, 1959. 193 p. Errata slip inserted. 2,700 copies printed.

Resp. Ed.: N. K. Pshenitsyn, USSR Academy of Sciences, Corresponding Member; and O. Ye. Zvyagintsev, Doctor of Chemical Sciences; Eds. of Publishing House: T. G. Levi, and D. N. Trifonov; Tech. Ed.: I. N. Guseva.

PURPOSE: This collection of articles is for scientists engaged in the study and analysis of the noble metals.

COVERAGE: This is a collection of articles on the analysis of the noble metals. It includes studies carried out by the Institute of General and Inorganic Chemistry im. N. S. Kurnakov (AN SSSR), as well as reports presented by scientific research organizations and by industrial enterprises at the Third and Fourth Conference on Noble Metals held in 1954 and 1957, respectively. The studies and reports describe new organic reagents for gravimetric determination of platinum metals, and physicochemical methods of analysis (spectrophotometric, polarographic and potentiometric). Special attention is given to spectral analysis for the determination of admixtures in alloys of platinum metals, silver, and gold, as well as in refined noble metals. The collection also includes analytical methods, tables and charts for materials containing metals of the platinum group, as well as a review of the literature on the analysis of platinum metals published in the last five years. No personalities are mentioned. References follow each chapter.

Pshenitsyn, N. K., K. A. Gladyshevskaya and L. M. Ryakhova. Use of the Ion Exchange Method in the Analysis of Platinum Metals. Report 2. Separation of Rhodium from Iridium 103

Anisimov, S. M., Ye. I. Nikitina and V. N. Alyanchikova. Methods of Preparing Poor Industrial Solutions and Obtaining From Them Cemented Substances for the Determination of Platinum Metals by Spectral Analysis 115

Khrapay, V. P. Spectral Method for the Determination of Platinum, Palladium, and Tellurium in Silver-gold Alloys 128

Pankratova, N. I. and A. D. Gut'ko. Spectral Method of Analysis for Refined Iridium and Ruthenium 133

Kuranov, A. A., N. P. Rukaba and M. M. Iriridova. Spectral Determination of Admixtures in Gold, Silver and Alloys 139

Kuranov, A. A. Spectral Analysis of Platinum Alloys Containing Three Components 143

Adakhovskiy, A. P. and V. M. Karbolin. Determining the Chemical Composition of Binary Alloys by the Thermoelectromotive Force 145

Avilov, V. B. Effect of Complexation and of the Acid-Alkali Balance in the Medium on the Potential of the $Au^{III}/Au^{0}$, $Au^{I}/Au^{0}$, $Au^{III}/Au^{I}$, and $Ag^{I}/Ag^{0}$ Systems 150

Avilov, V. B. and V. V. Kosova. Chromatometric Determination of Gold 156

Anisimov, S. M., V. M. Klypenkov and V. P. Tarmbal. Electrometric Method for the Determination of Silver in Silver and Lead Alloys Containing Platinum Metals 163

Yufa, T. P. and M. A. Chentsova. Dissolving Platinum Metals and Their Alloys With the Aid of an Alternating Current 176

Chentsova, M. A., T. P. Yufa and V. G. Levian. New Method for the Analysis of Palladium-silver Alloys 181

Rushnikov, N. S. and K. S. Sheina. Methods of Testing Palladium Alloys and Their Products on a Touchstone and by Chemical Means 184

APPROVED FOR RELEASE: 06/12/2000 CIA-RDP86-00513R000308320019-5"

"APPROVED FOR RELEASE: 06/12/2000 CIA-RDP86-00513R000308320019-5

CHENTSOVA, M. G.

CO

**Experimental investigations in application of the electronic theory to the chemistry of organic compounds. IV. Electronic theory in chemistry of monosulfo derivatives of naphthalene.** A. M. Berkenheim and M. G. Chentsova. *J. Gen. Chem.* (U. S. S. R.) 3, 933-46(1933); cf. *C. A.* 28, 1694[1,2], 1695[1].—β-$C_{10}H_7OSOCl$ was prepd. by slow addn. of $SOCl_2$ to β-naphthol dissolved in abs. ether. The product obtained was similar in some properties to β-$C_{10}H_7SO_2Cl$, but was very unstable and decompd. with evolution of $SOCl_2$. When it was treated with water a waxy mass formed, most probably free $C_{10}H_7OSO_2H$ (I), which shortly after decompd. with evolution of $SO_2$ into the dinaphthyl ether $C_{10}H_7.O.SO.O.C_{10}H_7$. The Na salt of I was prepd. It was a stable product, similar in appearance and soly. to its isomer, β-$C_{10}H_7SO_3Na$, but differing from the latter in that it sapond. easily. It is thought that compds. having an "abnormal" sulfo group are really sulfo ethers of naphthols: R—O—SO—OH. Inasmuch as during action of $SOCl_2$ upon β-naphthol a product not identical with $C_{10}H_7SO_2H$ was obtained, it follows that when the temp. is increased during naphthalene sulfonation, the sulfo group migrates from the α, first, to the β-position, third in respect to the neg. C. In the prepn. of β-naphthol the sulfo group, $-S\cdots\begin{cases}O^{\bullet}\\O^{\bullet}\\O^{\bullet}H^{\cdot}\end{cases}$ rearranges into the sulfo group, $-O'''-S\cdots\begin{cases}O^{\bullet}\\O^{\bullet}H^{\cdot}\end{cases}$ and occupies position 2 in respect to the C atom having 1 neg. and 3 pos. charges. **V. Electronic theory in the chemistry of disulfo derivatives of anthraquinone.** *Ibid.* 947-57.—Optimum conditions for the prepn. of "silver salt" (the Na salt of β-monosulfoanthraquinone), a valuable intermediate product in the manuf. of alizarin, from 2,6-disulfoanthraquinone by treatment with Na-Hg, were established on the basis of the theoretical electronic conceptions regarding the structure of the sulfo derivs. of aromatic compds.

W. P. Ericks

ASM-SLA METALLURGICAL LITERATURE CLASSIFICATION

APPROVED FOR RELEASE: 06/12/2000 CIA-RDP86-00513R000308320019-5"

"APPROVED FOR RELEASE: 06/12/2000 CIA-RDP86-00513R000308320019-5

CHENTSOVA, M.G.

CA

10

**Reaction of cotarnine and hydrastinine and their benzoyl derivatives with caustic alkalies.** V. M. Rodionov and M. G. Chentsova (I. V. Stalin 2nd Med. Inst., Moscow). *Zhur. Obshchei Khim.* (J. Gen. Chem.) 21, 321–7(1951).—Refluxing 6 g. cotarnine, 4 g. 50% KOH, and 5 g. EtOH 5 hrs. at 80° yields on dilu. and acidification with HCl, 34% *exocotarnine-HCl* (I), *2-(4,5-methylenedioxy-3-methoxy-2-carbozyphenyl)-N-methylethylamine-HCl*, decomp. above 300°, while the filtrate on addn. of excess NaOH gave 19.3% *hydrocotarnine*, m. 53–4° (*HCl salt*, m. 214–16°; *HBr salt*, m. 236°). Treatment of 2 g. I in $H_2O$ with excess $Ag_2O$ for 24 hrs. gave 74% of the "*closed*" *isoquinoline form* of the *free base, exocotarnine*, m. 147–9° (with some decompn.), which, contrary to the data of Freund and Wulff [*Ber.* 35, 1737(1902)], is sol. in alkalies and forms water-stable salts with acids. Cotarnine with 30% $CH_2O$ in 50% KOH at 55–60° in 8 hrs. gave 83% hydrocotarnine. Similarly benzoylhydrastinine with $CH_2O$ gave 88% *2-[2-(N-methylbenzamido)ethyl]piperonyl alc.*, $C_{18}H_{19}O_4N$, m. 113° (from EtOH); phenylurethan, m. 153° (from EtOH). Heating 2 g. benzoylhydrastinine, 1 g. KOH, and 10 ml. EtOH 8 hrs. at 40° and extn. with $C_6H_6$ yielded 73% of the *above alc.* and 57% of the *corresponding carboxylic acid*, m. 168° (from dil. EtOH). Crossed Cannizzaro reaction of hydrastinine, 35% $CH_2O$, and 50% KOH in the presence of EtOH gave 70% *hydrohydrastinine*, isolated as the *HCl salt*, m. 263°. Benzoylcotarnine failed to react with alkali either *per se* or in a crossed Cannizzaro reaction.

H. M. Kosolapoff

APPROVED FOR RELEASE: 06/12/2000 CIA-RDP86-00513R000308320019-5"

"APPROVED FOR RELEASE: 06/12/2000 CIA-RDP86-00513R000308320019-5

CHENTSOVA, M.G.

POLUNINA, Ye.F.; CHENTSOVA, M.G.; YAVORSKAYA, Ye.V.; RODIONOV, V.M., akademik, redaktor [deceased]; ZHUKOVA, I.G., redaktor; SACHEVA, A.I., tekhnicheskiy redaktor

[Manual on applied studies on organic chemistry for students in schools of medicine] Rukovodstvo k prakticheskim zaniatiiam po organicheskoi khimii dlia studentov meditsinskikh institutov. Pod red. V.M.Rodionova. Moskva, Gos. izd-vo med. lit-ry, 1954. 110 p. (MLRA 7:10)

1. Sotrudnik kafedry organicheskoy khimii II Moskovskogo meditsinskogo instituta imeni I.V.Stalina (for Polunina, Chentsova, Yavorskaya)

(Chemistry, Organic)

APPROVED FOR RELEASE: 06/12/2000 CIA-RDP86-00513R000308320019-5"

"APPROVED FOR RELEASE: 06/12/2000 CIA-RDP86-00513R000308320019-5

STEPANENKO, B. N.; IGNATYUK-MAYSTRENKO, V. A.; CHENTSOVA, M. G.

"Studies on the Hydrolysis of Glycosylamines."

report submitted for the 6th Intl Biochemistry Cong, New York City, 26 Jul-1 Aug 1964.

APPROVED FOR RELEASE: 06/12/2000 CIA-RDP86-00513R000308320019-5"

"APPROVED FOR RELEASE: 06/12/2000 CIA-RDP86-00513R000308320019-5

STEPANENKO, B.N.; IGNATYUK-MAYSTRENKO, V.A.; CHENTSOVA, M.G.

Hydrolysis kinetics of some N-glycosides. Dokl. AN SSSR 154 no. 3:650-653 Ja '64. (MIRA 17:5)

1. Institut biokhimii im. A.N.Bakha AN SSSR i Pervyy Moskovskiy meditsinskiy institut im. I.M.Sechenova. Predstavleno akademikom A.I.Oparinym.

APPROVED FOR RELEASE: 06/12/2000 CIA-RDP86-00513R000308320019-5"

"APPROVED FOR RELEASE: 06/12/2000 CIA-RDP86-00513R000308320019-5

CHENTSOVA, N.I.

PHASE I BOOK EXPLOITATION SOV/4959

Ural'skoye soveshchaniye po spektrosk

Materialy 2 Ural'skogo soveshchaniya po spektroskopii, Sverdlovsk, 1958 g. (Materials of the Second Urals Conference on Spectroscopy, Held in Sverdlovsk, 1958) Sverdlovsk, Metallurgizdat, 1959. 206 p. Errata slip inserted. 1,000 copies printed.

Sponsoring Agency: Ural'skiy filial Akademii nauk SSSR. Komissiya po spektroskopii and Ural'skiy dom tekhniki VSNTO.

Eds.: Aron Borisovich Shayovich and Gennadiy Pavlovich Skornyakov; Tech. Ed.: N. M. Matiyuk.

PURPOSE: This collection of articles is intended for spectral analysis laboratory workers at ferrous and nonferrous metallurgical plants, and for laboratory personnel of the metal-working industry, geological and prospecting organizations, and similar scientific research laboratories.

COVERAGE: The collection contains papers read at the Second Urals Conference on the spectral analysis of ferrous and nonferrous metals and alloys, slags, ores, agglomerates, refractories and other materials used in industry. The material of the conference includes articles on the analysis of steels (including the determination of gases), ferroalloys, nonferrous and light metals and alloys, pure noble metals, etc. The present volume is intended to disseminate the latest experience in working with spectral laboratories, and to report on the results of scientific research. The author thanks R. I. Gutkina and Yu. M. Buravlev. Almost all of the articles are accompanied by references.


Kuranov, A. A., and M. M. Sviridova. Spectral Analysis of Silver-Copper Alloys From a Standard of Silver and of any Silver-Copper Alloy 116

Kuranov, A. A., N. I. Chentsova, and V. D. Ponomareva. Methods of Preparing Standards for the Spectral Analysis of Spongy Iridium and Rhodium 125

Pankratova, N. I., A. D. Gut'ko, N. M. Bastrakova, and Z. N. Kozyayeva. Spectral Method of Analyzing Refined Iridium and Ruthenium 128

Gutkina, R. I. Spectrochemical Analysis of High-Purity Antimony 134

Shtutman, M. N., and Ye. V. Zvereva. Some Problems in the Spectral Analysis of Slags, Ores, and Agglomerates 138

Shtutman, M. N., V. P. Avdeyenko, Ye. V. Zvereva, V. M. Shteynberg, and T. A. Yeremeyeva. Possibility of Using a Pulse Source for the Analysis of Slags and Agglomerates 146

Lytkina, N. I., and G. F. Preobrazhenskaya. Spectral Determination of Oxides of Vanadium, Magnesium, and Calcium in Agglomerate by the Dilution Method 154

Makhnev, Yu. A., and A. M. Shavrin. Determination of Titanium in Titanomagnetites and Slags by the Dilution Method 157

Semkina, N. V. Spectral Analysis in the Refractories Industry 159

Pinkin, K. Z. Investigation of Certain Characteristics of Vaporization and Excitation of Elements in Assay-With-Graphite Mixtures in the Spectral Analysis of Ores and Minerals 166

Lesnikova, Ye. N. Effect of Certain Factors on the Intensity of Spectral Lines in the Nonconducting Powdered Assays 170

Kolokol'nikova, R. P., and Ya. D. Raykhbaum. Spectrographic Determination of Niobium and Tantalium in Products of Ore Dressing 176

Prokhorov, V. G. Application of Visual Spectroscopy Methods in the Analysis of Rock, Ores, and Minerals 180

Shilenko, R. S. Experience in Operating the Spectral Laboratory of a Geological Prospecting Party 184

Narbutovskikh, T. S., O. D. Frenkel', and A. P. Kopylova. Spectral Determination of Indium and Germanium in Sublimates of Copper-Smelting Plants 186

Shubina, S. B. Spectral Analysis of Saline and Alkaline Baths Used in the Heat Treatment of Steel Products 188

Fedos, F. Z. Low-Voltage Pulse-Discharge Generator for Exciting Spectra 191

Turko, M. M. Method of Taking Into Account Background and Impurities in Practical Work at a Plant Spectral Laboratory. 194

Recommendations of the 2nd Urals Conference on Spectroscopy 202


APPROVED FOR RELEASE: 06/12/2000 CIA-RDP86-00513R000308320019-5"

"APPROVED FOR RELEASE: 06/12/2000 CIA-RDP86-00513R000308320019-5

KURANOV, A.A.; PONOMAREVA, V.D.; CHEMTSOVA, N.I.

Spectral determination of impurities in iridium and rhodium. Zhur. anal.khim. 15 no.4:476-480 Jl-Ag '60. (MIRA 13:9)
(Iridium--Analysis) (Rhodium--Analysis)

APPROVED FOR RELEASE: 06/12/2000 CIA-RDP86-00513R000308320019-5"

"APPROVED FOR RELEASE: 06/12/2000 CIA-RDP86-00513R000308320019-5

CHEMTSOVA, N. YU.

25644

Opredelenie Vozrasta Polevok Misgotus Gregalis Rail. Po Plastichekim Priznakam. Trudy Vsesoyuz. In-ta Zashchity Rasteniy, VYP. 2, 1949, s. 143 - 48.

SO: LETOPIS No. 34

APPROVED FOR RELEASE: 06/12/2000 CIA-RDP86-00513R000308320019-5"

"APPROVED FOR RELEASE: 06/12/2000 CIA-RDP86-00513R000308320019-5

CHENTSOVA, N. Yu.

"Poisoned Baits for Use Against Rodents in Forest Plantings," Les. Khoz., 5, No.6, 1952

APPROVED FOR RELEASE: 06/12/2000 CIA-RDP86-00513R000308320019-5"

"APPROVED FOR RELEASE: 06/12/2000 CIA-RDP86-00513R000308320019-5

CHENTSOVA, N. Yu.

"Behavior of Mice-Like Rodents in Searching for Food and the Protection of Seed Grain from Them," Zool. Zhur., 31, No.3, ~~19~~ 1952

APPROVED FOR RELEASE: 06/12/2000 CIA-RDP86-00513R000308320019-5"

"APPROVED FOR RELEASE: 06/12/2000 CIA-RDP86-00513R000308320019-5

Cherntsova, N. Yu.

CHERNTSOVA, N. Yu.

Scattering poison baits in forests and its effect on some useful birds. Trudy probl. i tem.sov. no.5:74-75 '55. (MLRA 8:12)

1. Vsesoyuznyy institut zashchity rasteniy, Vsesoyuznaya akademiya sel'skokhozyaystvennykh nauk imeni Lenina.
(Pesticides) (Birds, Protection of)

APPROVED FOR RELEASE: 06/12/2000 CIA-RDP86-00513R000308320019-5"

"APPROVED FOR RELEASE: 06/12/2000 CIA-RDP86-00513R000308320019-5

CHENTSOVA, NINA Yu. (USSR)

"Experimental investigation of the reproduction of Lagurus Pall. under different conditions of food and temperature in Russia."

report presented at the Intl. Symposium on Methods of Theriological Investigation. Brno, Czech.,
26 Aug - 4Sept. 1960

APPROVED FOR RELEASE: 06/12/2000 CIA-RDP86-00513R000308320019-5"

"APPROVED FOR RELEASE: 06/12/2000 CIA-RDP86-00513R000308320019-5

CHENTSOVA, O. B.

Dissertation: "Streptomycin in the Treatment of Tuberculosis of the Eye." Cand Med Sci, First Moscow Order of Lenin Medical Inst, 23 Jun 54. (Vechernyaya Moskva, Moscow, 14 Jun 54)

SO: SUM 318, 23 Dec. 1954

APPROVED FOR RELEASE: 06/12/2000 CIA-RDP86-00513R000308320019-5"

"APPROVED FOR RELEASE: 06/12/2000 CIA-RDP86-00513R000308320019-5

CHENTSOVA, O.B., kandidat meditsinskikh nauk

Streptomycin therapy of ocular tuberculosis. Sov.med. 21 no.2: 81-85 F '57. (MIRA 10:6)

1. Iz glaznoy kliniki I Moskovskogo ordena Lenina meditsinskogo instituta (zav. - chlen-korrespondent Akademii meditsinskikh nauk SSSR prof. V.N.Arkhangel'skiy)
(TUBERCULOSIS, OCULAR, ther.
streptomycin)
(STREPTOMYCIN, ther. use
tuberc., ocular)

APPROVED FOR RELEASE: 06/12/2000 CIA-RDP86-00513R000308320019-5"

"APPROVED FOR RELEASE: 06/12/2000 CIA-RDP86-00513R000308320019-5

CHENTSOVA, O.B. (Moskva)

Collagen disease; review of foreign literature. Vest.oft. 70 no.3: 61-64 My-Je '57. (MIRA 10:8)
(COLLAGEN DISEASES, review)

APPROVED FOR RELEASE: 06/12/2000 CIA-RDP86-00513R000308320019-5"

"APPROVED FOR RELEASE: 06/12/2000 CIA-RDP86-00513R000308320019-5

CHENTSOVA, O.

"Eye diseases in pathology of pregnancy" by U.Musabeli. Reviewed by O.Chentsova. Vest.oft. 70 no.4:59-60 Jl-Ag '57. (MIRA 10:10)
(EYE--DISEASES AND DEFECTS)
(PREGNANCY, COMPLICATIONS OF)
(MUSABELI, U.)

APPROVED FOR RELEASE: 06/12/2000 CIA-RDP86-00513R000308320019-5"

"APPROVED FOR RELEASE: 06/12/2000 CIA-RDP86-00513R000308320019-5

CHENTSOVA, O.B.

Resection of the sclera with the use of plastic material; review of foreign literature. Vest.oft. 71 no.6:35-41 N-D '58 (MIRA 11:11)

(SCLERA, surg.
resection with insertion of plastic material, review (Rus))

APPROVED FOR RELEASE: 06/12/2000 CIA-RDP86-00513R000308320019-5"

"APPROVED FOR RELEASE: 06/12/2000 CIA-RDP86-00513R000308320019-5

CHENTSOVA, O.B.

Radioactive isotopes in ophthalmology; a survey review of the literature. Vest.oft. 72 no.4:55-58 Jl-Ag '59. (MIRA 13:4)
(OPHTHALMOLOGY)
(RADIOISOTOPES)

APPROVED FOR RELEASE: 06/12/2000 CIA-RDP86-00513R000308320019-5"

"APPROVED FOR RELEASE: 06/12/2000 CIA-RDP86-00513R000308320019-5

CHENTSOVA, O.B., kand.med.nauk

Late results of treatment for tuberculosis of the eye and its recurrence. Vest.oft. no.6:3-7 '60. (MIRA 14:11)

1. Glaznaya kliniki (zav. - prof. D.I. Berezinskaya) Moskovskogo oblastnogo nauchno-issledovatel'skogo instituta imeni M.F. Vladimirskogo (dir. - P.M. Leonenko).
(EYE—TUBERCULOSIS)

APPROVED FOR RELEASE: 06/12/2000 CIA-RDP86-00513R000308320019-5"

"APPROVED FOR RELEASE: 06/12/2000 CIA-RDP86-00513R000308320019-5

CHENTSOVA, O. B., kand. med. nauk.

Use of Colchamine (omain) in treating malignant tumors of the palpebral skin. Vest. oft. no.5:57-64 '61. (MIRA 14:12)

1. Glaznaya klinika (zav. - prof. D. I. Berezinskaya) Moskovskogo oblastnogo nauchno-issledovatel'skogo klinicheskogo instituta imeni M. F. Vladimirskogo.

(COLCHAMINE) (EYELIDS--CANCER)

APPROVED FOR RELEASE: 06/12/2000 CIA-RDP86-00513R000308320019-5"

"APPROVED FOR RELEASE: 06/12/2000 CIA-RDP86-00513R000308320019-5

BEREZINSKAYA, Dina Isaakovna, prof.; CHENTSOVA, Ol'ga Borisovna, st. nauchn. sotr.; BAYTERYAKOVA, Lyaylya Safovna, st. nauchn. sotr.; RABINOVICH, M.G., red.

[Complex ophthalmoscopic changes and their diagnosis] Slozhnye oftal'moskopicheskie izmeneniia i ikh diagnostika. Moskva, Meditsina, 1965. 140 p. (MIRA 18:7)

1. Glaznaya klinika Moskovskogo oblastnogo nauchno-issledovatel'skogo klinicheskogo instituta (for all except Rabinovich).

APPROVED FOR RELEASE: 06/12/2000 CIA-RDP86-00513R000308320019-5"

"APPROVED FOR RELEASE: 06/12/2000 CIA-RDP86-00513R000308320019-5

CHENTSOVA, O.S., insh.

Features in the calculation of germanium detectors. Trudy MEI no.31: 134-147 '56 (MIRA 13:3)
(Germanium diodes)

APPROVED FOR RELEASE: 06/12/2000 CIA-RDP86-00513R000308320019-5"

"APPROVED FOR RELEASE: 06/12/2000 CIA-RDP86-00513R000308320019-5

CHENTSOVA, O.S.

103-8-4/11

AUTHOR GUTKIN L.S., Regular Member of Society, CHENTSOVA O.S. ~~XXXXXXXX~~

TITLE Analysis of the Transition Processes in the Case of Diode Detection According to the Method of Audio-Frequency Equivalents. (Analiz perekhodnykh protsessov pri diodnom detektirovanii metodom nizkochastotnykh ekvivalentov-Russian)

PERIODICAL Radiotekhnika, 1957, Vol 12, Nr 6, pp 31 - 44 (U.S.S.R.)

ABSTRACT A method for the analysis of the transition processes in a high-frequency-amplifier-diode detector system is given. By means of this method relatively simple results can be obtained and the transition processes in the system of the amplifier circuit, which feed the detector, are taken into account in the case of various types of these circuits as well as of various rules governing modification of the envelope curves of the initial signal. This method is based on a linearization of the processes occuring on the occasion of detection, then on the replacement of the detector as well as of the system of fedding circuits by audio-frequency equivalents. The authors show that the audio-frequency equivalent of the selection system must meet the following two demands: 1.-It must have a transmission coefficient which is similar to the complex transmission coefficient for the envelope curves of the selection system in the case of idle motion i.e. without regard to detector reaction. 2.-It must have an initial resistance which is similar to the initial resistance for the envelope curves of the selection system. The parameters of an audio-frequency equivalent

Card 1/2

APPROVED FOR RELEASE: 06/12/2000 CIA-RDP86-00513R000308320019-5"

"APPROVED FOR RELEASE: 06/12/2000 CIA-RDP86-00513R000308320019-5

Analysis of the Transition Processes in the Case of [redacted]
Diode Detection According to the Method of Audio-Frequency Equivalents.

with a two-circuit filter are determined as examples.
(18 illustrations and 6 Slavic references).

ASSOCIATION Not Given.
PRESENTED BY
SUBMITTED 14.6.1956
AVAILABLE Library of Congress.
Card 2/2

APPROVED FOR RELEASE: 06/12/2000 CIA-RDP86-00513R000308320019-5"

"APPROVED FOR RELEASE: 06/12/2000 CIA-RDP86-00513R000308320019-5

Chentsova, O. S.

AUTHORS: Gutkin, L. S., Real Member of the Society, and Chentsova, O. S. 108-11-6/10

TITLE: Transition-Processes in the "High Frequency-Amplifier-Detector" System (Perekhodnyye protsessy v sisteme "usilitel' vysokoy chastoty-detektor").

PERIODICAL: Radiotekhnika, 1957, Vol. 12, Nr 11, pp. 50-61 (USSR).

ABSTRACT: With reference to the earlier work of the authors (reference 1) and the in this work established method of low frequency-equivalents is adapted for the analysis of the transition-processes in the most common schemes. The indicated method allows to take into consideration the influence of the transition-processes in a system feeding the detector under various variation-rules of the envelope curve of the input signal. Examined are: a tuned resonance-circuit, a untuned resonance-circuit and two coupled circuits.
There are 19 figures and 5 references, 5 of which are Slavic.

SUBMITTED: June 14, 1956.

Card 1/2

APPROVED FOR RELEASE: 06/12/2000 CIA-RDP86-00513R000308320019-5"

"APPROVED FOR RELEASE: 06/12/2000 CIA-RDP86-00513R000308320019-5

108-11-6/10

Transition-Processes in the "High Frequency-Amplifier-Detector" (Cont.)

ASSOCIATION: Nauchno-tekhnicheskoye obshchestvo radiotekhniki i elektrosvyazi im. A.S. Popova (Scientific-technical Society of Radio Engineering and Electrical Communications im. A.S. Popov)

AVAILABLE: Library of Congress

Card 2/2

APPROVED FOR RELEASE: 06/12/2000 CIA-RDP86-00513R000308320019-5"

"APPROVED FOR RELEASE: 06/12/2000 CIA-RDP86-00513R000308320019-5

CHERTSOVA, O.S.

Some problems pertaining to detection with germanium and vacuum diodes. Trudy MEI no.29:230-246 '57. (MIRA 13:3)
(Electron tubes)

APPROVED FOR RELEASE: 06/12/2000 CIA-RDP86-00513R000308320019-5"

"APPROVED FOR RELEASE: 06/12/2000 CIA-RDP86-00513R000308320019-5

CHENTSOVA, O.S., Cand Tech Sci -- (diss) "Certain problems of detecting with semiconductor and vacuum diodes." Mos 1958, 8 pp (Min of Higher Education USSR. Mos Order of Lenin Power Engineering Inst) 100 copies (KL, 21-58, 91)



APPROVED FOR RELEASE: 06/12/2000 CIA-RDP86-00513R000308320019-5"