"APPROVED FOR RELEASE: 06/19/2000 CIA-RDP86-00513R000308720017-3

CHESNOKOV, V.A.; ZHABOTINSKIY, G.Kh.

A new organic acid widely spread in plant leaves [with summary in English]. Vest. LGU 13 no.3:148-151 '58. (MIRA 11:5)
(Plants—Chemical composition) (Itaconic acid)

APPROVED FOR RELEASE: 06/19/2000 CIA-RDP86-00513R000308720017-3"

"APPROVED FOR RELEASE: 06/19/2000 CIA-RDP86-00513R000308720017-3

CHESNOKOV, V.A.; PINEVICH, V.V.; VERZILIN, N.N.; STEPANOVA, A.M.

Some results of mass culture of unicellular algae. Vest. LGU 15 no.9:29-36 '60. (MIRA 13:4)

(ALGAE)

APPROVED FOR RELEASE: 06/19/2000 CIA-RDP86-00513R000308720017-3"

"APPROVED FOR RELEASE: 06/19/2000 CIA-RDP86-00513R000308720017-3

CHESNOKOV, V.A.

Some physiological aspects of increasing the productivity of unicellular algae. Vest. LGU 17 no.9:113-122 '62. (MIRA 15:5)
(ALGAE--CULTURES AND CULTURE MEDIA)

APPROVED FOR RELEASE: 06/19/2000 CIA-RDP86-00513R000308720017-3"

"APPROVED FOR RELEASE: 06/19/2000 CIA-RDP86-00513R000308720017-3

CHESNOKOV, V.A.; RAKHIMOV, G.

Influence of growth conditions on the activity of photosynthetic apparatus in plants. Part 1. Effect of shading on the activity of the photosynthetic apparatus in plants. Vest. LGU 19 no.3:127-138 '64. (MIRA 17:3)

APPROVED FOR RELEASE: 06/19/2000 CIA-RDP86-00513R000308720017-3"

"APPROVED FOR RELEASE: 06/19/2000 CIA-RDP86-00513R000308720017-3

CHESNOKOV, V.A.; RAKHIMOV, G.; BUSHUYEVA, T.M.; NOVIKOVA, N.V.

Effect of warming up of leaves on the photosynthesis and activity of isolated chloroplasts. Vest. LGU 19 no.15:105-110 '64.
(MIRA 17:11)

APPROVED FOR RELEASE: 06/19/2000 CIA-RDP86-00513R000308720017-3"

"APPROVED FOR RELEASE: 06/19/2000 CIA-RDP86-00513R000308720017-3

CHESNOKOV, V. A.; ZHABOTINSKIY, G. Kh.; IL'INSKAYA, N. L.

Organic acids in plants, their physiological role and possibilities for practical use. Trudy PBI no.19:57-87 '62. (MIRA 16:1)

(Acids, Organic) (Plants—Metabolism)

APPROVED FOR RELEASE: 06/19/2000 CIA-RDP86-00513R000308720017-3"

"APPROVED FOR RELEASE: 06/19/2000 CIA-RDP86-00513R000308720017-3

CHESNOKOV, V.A.

Reequipping a VKP-16 machine for assembling lake bundles. Les. prom.14 no.4:25-27 Ap '54. (MLRA 7:4)

1. Starshiy nauchnyy sotrudnik VKP Vsesoyuznogo tsentral'nogo nauchno-issledovatel'skogo instituta. (Lumbering--Machinery)

APPROVED FOR RELEASE: 06/19/2000 CIA-RDP86-00513R000308720017-3"

"APPROVED FOR RELEASE: 06/19/2000 CIA-RDP86-00513R000308720017-3

CHESNOKOV, V.A.; TSVETKOV, N.Ya.

On swithicng and protection in networks of 3--6--10 kv in oil fields and refineries. Energ.biul. no.1:22-23 Ja '57. (MIRA 10:1)

(Electric switchgear) (Petroleum industry--Electric equipment)

APPROVED FOR RELEASE: 06/19/2000 CIA-RDP86-00513R000308720017-3"

"APPROVED FOR RELEASE: 06/19/2000 CIA-RDP86-00513R000308720017-3

CHESNOKOV, V. A.

V. A. Chesnokov, "On a New Vibration Resistant Bearing of High Capacity Developed by M. L. Nowikow."

paper presented at the 2nd All-Union Conf. On Fundamental Problems in the Theory of Machines and Mechanisms, Moscow, USSR, 24-28 March 1958.

APPROVED FOR RELEASE: 06/19/2000 CIA-RDP86-00513R000308720017-3"

"APPROVED FOR RELEASE: 06/19/2000 CIA-RDP86-00513R000308720017-3

CHESNOKOV, V.A.

FEDYAKIN, R.V., kand. tekhn. nauk; CHESNOKOV, V.A., kand. tekhn. nauk, dots.

Gear transmission with M.L. Novikov's meshes. Vest. mash. 38 no.4: 3-11 Ap '58. (MIRA 11:3)

(Gearing)

APPROVED FOR RELEASE: 06/19/2000 CIA-RDP86-00513R000308720017-3"

"APPROVED FOR RELEASE: 06/19/2000 CIA-RDP86-00513R000308720017-3

SOV/122-58-5-2/26

AUTHORS: Fedyakin, R.V. and Chesnokov, V.A., Candidates of Technical Sciences

TITLE: The Design of Gear Transmissions of the M.L. Novikov Type (Raschet zubchatoy peredachi M.L. Novikova)

PERIODICAL: Vestnik Mashinostroyeniya, 1958, Nr 5, pp 11 - 19 (USSR).

ABSTRACT: The sequence of design of the new Novikov tooth form is discussed. The tooth profile consists of circular arcs but the tooth as a whole has a complex shape. The shape and load distribution of the contact area are assumed. Usually, a truncated elliptical area is the result of short teeth. A circular distribution over the middle portion of the tooth width is said to be typical. The case of point contact with an elliptical contact area is also considered. Geometric relations derived in the two authors' previous paper (Vestnik Mashinostroyeniya, 1958, Nr 4) are re-capitulated. The radii of curvature of the pinion and wheel teeth are computed. Linear contact along the tooth height gives the best load capacity. The contact stresses for this case are computed by means of the Hertz theory. Formulae are given for determining the radii of the equivalent cylinders. The calculation yields a "reduced" radius and a "reduced" length of the equivalent

Card1/3

APPROVED FOR RELEASE: 06/19/2000 CIA-RDP86-00513R000308720017-3"

"APPROVED FOR RELEASE: 06/19/2000 CIA-RDP86-00513R000308720017-3

SOV/122-58-5-2/26

The Design of Gear Transmission of the M.L. Novikov Type

cylinder whose product, multiplied by the square of the permissible contact stress and by a numerical factor, gives the limiting tangential force transmitted by the tooth. The permissible contact stress is proportional to the Brinell hardness number and to the sixth root of the reciprocal number of load cycles. Gears so designed and tested under operating conditions are claimed to have exceeded the capacity of involute gears of the same size by a factor of 3 at an average peripheral speed of 12 m/sec. Gears running up to 60 m/sec were tested at the Nikolayevskiy mashinostroitel'nyy zavod (Nikolayevsk Engineering Works) showing a similar superiority. The helix angle has a substantial effect. The best results were obtained with a helix angle of about 15°. The design of the teeth for bending strength is based on a formula by which the bending stress is proportional to the tangential force and the tooth height and inversely proportional to the square of the root cross-section of the tooth. This follows from the application of a load which is uniformly distributed over the height of the tooth and elliptically over the length. Teeth of equal safety against bending and contact stresses are obtained by changes of profile but not by changes in module.

Card2/3

APPROVED FOR RELEASE: 06/19/2000 CIA-RDP86-00513R000308720017-3"

"APPROVED FOR RELEASE: 06/19/2000 CIA-RDP86-00513R000308720017-3

SOV/122-58-5-2/26

The Design of Gear Transmission of the M.L. Nivokov Type

It is thought that at least three different basic profiles will be required to make full use of the potentialities of the new tooth shape. Details of bending strength analysis are given for convex and concave teeth. A safety factor of 2.5 is recommended. A very high strength of the new tooth form is claimed, supported by practical tests. The original teeth with both sides of the profile consisting of concentric circular arcs have excessive strength. After laboratory experiments assisted by strain gauge measurements, the appropriate proportions were established for the tooth thickness and the root fillet radius. The tooth strength is determined mainly by the value of the profile shift, by the pressure angle and by the helix angle. A shift of 0.05 - 0.20, a pressure angle of 20 - 30° and a helix angle of about 12° appear to give best results. With the basic parameters chosen, the geometric design of the tooth profile can be carried out. A detailed instruction and sequence of steps are given in the paper. There are 7 figures and 5 Soviet references.

Card 3/3 1. Transmission gears--Design

APPROVED FOR RELEASE: 06/19/2000 CIA-RDP86-00513R000308720017-3"

"APPROVED FOR RELEASE: 06/19/2000 CIA-RDP86-00513R000308720017-3

CHESNOKOV, V.A.

NOVIKOV, Mikhail Leont'yevich, doktor tekhn.nauk [deceased]. Prinimal uchastiye FEDYAKIN, R.V., kand.tekhn.nauk. CHESNOKOV, V.A., red.; YATSENKO, G.G., otv. za vypusk; SUKHAREVA, R.A., tekhn.red.

[New system of gear meshing] Novaia sistema zubchatogo zatsepleniia. Moskva, Mosk.dom nauchno-tekhn.propagandy im. F.E. Dzerzhinskogo, 1959. 39 p. (Peredovoi opyt proizvodstva. Ser. "Tekhnologiia mashinostroeniia," no.27. Novye tekhnologicheskie protsessy] (MIRA 13:1)

(Gearing)

APPROVED FOR RELEASE: 06/19/2000 CIA-RDP86-00513R000308720017-3"

"APPROVED FOR RELEASE: 06/19/2000 CIA-RDP86-00513R000308720017-3

CHESNOKOV, V., kand.tekhn.nauk

Novikov's gears. Izobr.i rats.. no.6:22-24 Je '59.
(MIRA 12:9)
(Gearing)

APPROVED FOR RELEASE: 06/19/2000 CIA-RDP86-00513R000308720017-3"

"APPROVED FOR RELEASE: 06/19/2000 CIA-RDP86-00513R000308720017-3

CHESNOKOV, V.A., aspirant

Cutting straight-toothed bevel gear wheels on a gear-shaping machine without copying devices. Issl.v obl.metallorezh.stan. no.4:157-163 '61. (MIRA 14:12)

(Gear cutting)

APPROVED FOR RELEASE: 06/19/2000 CIA-RDP86-00513R000308720017-3"

"APPROVED FOR RELEASE: 06/19/2000 CIA-RDP86-00513R000308720017-3

ACC NR: AP7001963 SOURCE CODE: UR/0120/66/000/006/0196/0198

AUTHOR: Ayzenberg, V. N.; Chesnokov, V. A.

ORG: none

TITLE: Rectangular-pulse current generator with a silicon-controlled rectifier

SOURCE: Pribory i tekhnika eksperimenta, no. 6, 1966, 196-198

TOPIC TAGS: pulse generator, pulse signal

ABSTRACT: A pulse generator which uses a silicon-controlled rectifier (SCR) is described (see Fig. 1). A triggering signal amplified by T_6- T_7 causes the SCR to conduct. Simultaneously, the triggering signal amplified by T_1 and T_4 causes thyratron (T_5) to conduct and capacitor C is discharged through it. When the voltage on capacitor C reaches the value $E_1 - \Delta U_t$ (ΔU_t is a voltage drop across the thyratron in the open state), the thyratron turns off. After the time interval which determines the duration of the pulse, a negative pulse is applied to the circuit consisting of 1/2 T_1, T_2, T_3. After being amplified by 1/2 T_1 and T_2, this pulse causes the thyratron to conduct. The voltage on the plate of T_3 and, consequently, that on the plate of the SCR decrease. The SCR is thereby cut off,

 UDC: 621.373.444

APPROVED FOR RELEASE: 06/19/2000 CIA-RDP86-00513R000308720017-3"

"APPROVED FOR RELEASE: 06/19/2000 CIA-RDP86-00513R000308720017-3

ACC NR: AP7001963

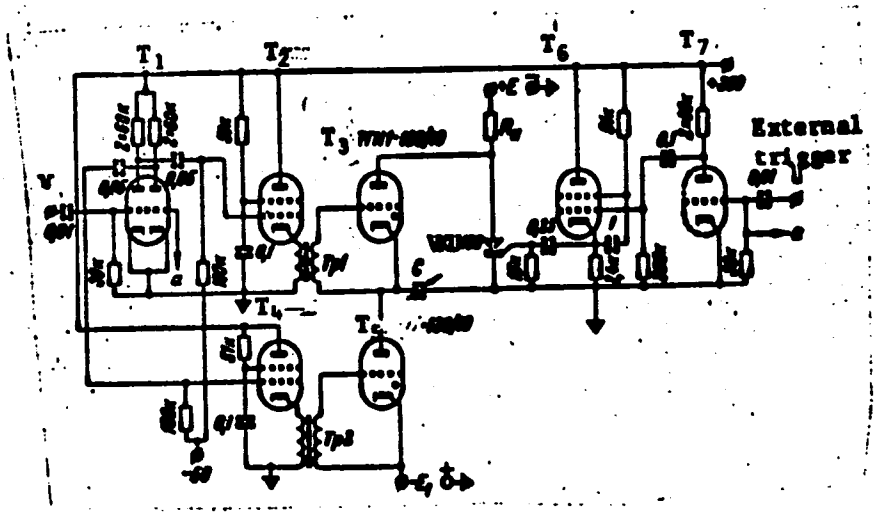

Fig. 1. The circuit of the pulse generator.

and capacitor C is discharged through the thyratron. The described circuit incorporating the silicon-controlled rectifier VKU-100 generates rectangular pulses with up to 100 amp current, 50 μsec duration, and rise and fall durations of 10 and 2 μsec, respectively. Orig. art. has; 3 figures. [GS]

SUB CODE: 09/ SUBM DATE: 24Dec65/ ORIG REF: 002/ ATD PRESS: 5110

Card 2/2

APPROVED FOR RELEASE: 06/19/2000 CIA-RDP86-00513R000308720017-3"

"APPROVED FOR RELEASE: 06/19/2000 CIA-RDP86-00513R000308720017-3

ACC NR: AP7001451 (N) SOURCE CODE: UR/0413/66/000/021/0188/0188

INVENTORS: Fedyakin, R. V.; Chesnokov, V. A.

ORG: none

TITLE: A roller bearing. Class 47, No. 188231 [announced by Military Aviation Engineering Order of Lenin Krasnoznamennaya Academy im. Prof. N. Ye. Zhukovskiy (Voyenno-vozdushnaya inzhenernaya ordena Lenina Krasnoznamennaya Akademiya)]

SOURCE: Izobreteniya, promyshlennyye obraztsy, tovarnyye znaki, no. 21, 1966, 188

TOPIC TAGS: roller bearing, machine accessory, bearing race

ABSTRACT: This Author Certificate presents a roller bearing with grooved working surfaces of rings and rollers. To increase its load-bearing capacity and to diminish the noise it produces, the grooved working surfaces of rings and rollers are concave-convex and are identical in the rings and in the rollers (see Fig. 1). These grooves in the surfaces may be disposed in a herringbone pattern, may be curvilinear or helical.

Card 1/2 UDC: 621.822.84

APPROVED FOR RELEASE: 06/19/2000 CIA-RDP86-00513R000308720017-3"

"APPROVED FOR RELEASE: 06/19/2000 CIA-RDP86-00513R000308720017-3

ACC NR: AP7001451

Fig. 1. 1 - roller; 2 - external race;
3 - internal race

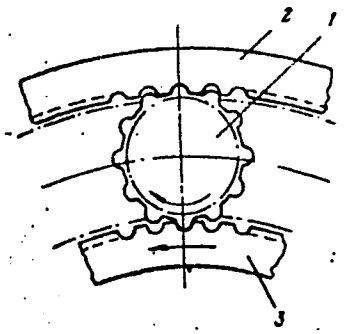

Orig. art. has: 1 figure.

SUB CODE: 13/ SUBM DATE: 15Dec64

Card 2/2

APPROVED FOR RELEASE: 06/19/2000 CIA-RDP86-00513R000308720017-3"

"APPROVED FOR RELEASE: 06/19/2000 CIA-RDP86-00513R000308720017-3

CHESNOKOV, V.F.

Physicochemical analysis of the ternary system urea-acetic acid-phenylacetic acid. I. M. Bokhovkin and V. F. Chesnokov (Forest. Inst., Archangel). *Zhur. Obshchei Khim.* 25, 909-14(1955).—No interaction was found in the binary system of $CO(NH_2)_2$ and $PhCH_2CO_2H$ by thermal-analysis methods. The latter applied to the ternary system showed that the largest area of crystallization is that of $CO(NH_2)_2$, followed by that of $PhCH_2CO_2H$, and finally of the compound $CO(NH_2)_2.2AcOH$, m. 39°; AcOH occupies the smallest of crystallization areas on the diagram. The results are shown graphically. The system has 2 ternary eutectics: one 12° with 35 mole % AcOH, 35 mole % $PhCH_2CO_2H$, and 30 mole % $CO(NH_2)_2$, and the other at −3° with 8 mole % $CO(NH_2)_2$, 74 mole % AcOH, and 18 mole % $PhCH_2CO_2H$. Curves of compn. vs. cond., viscosity, and d. in the binary systems $CO(NH_2)_2$–$PhCH_2CO_2H$ and AcOH–$PhCH_2CO_2H$ were almost rectilinear and indicated the lack of chem. interaction. G. M. Kosolapoff

APPROVED FOR RELEASE: 06/19/2000 CIA-RDP86-00513R000308720017-3"

"APPROVED FOR RELEASE: 06/19/2000 CIA-RDP86-00513R000308720017-3

CHESNOKOV, V.F.; BOKHOVKIN, I.M.

Thermal analysis of the ternary system acetamide - acetic acid - phenylacetic acid. Zhur.ob.khim. 30 no.7:2124-2127 Jl '60. (MIRA 13:7)

1. Arkhangel'skiy lesotekhnicheskiy institut.
(Acetamide) (Acetic acid)

APPROVED FOR RELEASE: 06/19/2000 CIA-RDP86-00513R000308720017-3"

"APPROVED FOR RELEASE: 06/19/2000 CIA-RDP86-00513R000308720017-3

BOKHOVKIN, I.M.; VITMAN, Ye.O.; YERMOLINA, N.N.; CHESNOKOV, V.F.

Physicochemical analysis of the ternary system carbamide-phenol - acetic acid. Zhur.ob.khim. 32 no.9:2755-2759 S '62. (MIRA 15:9)

1. Arkhangel'skiy lesotekhnicheskiy institut imeni V.V. Kuybysheva.

(Urea) (Phenols) (Acetic acid)

APPROVED FOR RELEASE: 06/19/2000 CIA-RDP86-00513R000308720017-3"

"APPROVED FOR RELEASE: 06/19/2000 CIA-RDP86-00513R000308720017-3

CHESNOKOV, V.F.; BOKHOVKIN, I.M.

Thermal analysis of the ternary system acetamide - acetic acid-phenol. Zhur.ob.khim. 32 no.9:2760-2763 S '62. (MIRA 15:9)

1. Arkhangel'skiy lesotekhnicheskiy institut imeni V.V.Kuybysheva.
(Acetamide) (Acetic acid) (Phenols)

APPROVED FOR RELEASE: 06/19/2000 CIA-RDP86-00513R000308720017-3"

"APPROVED FOR RELEASE: 06/19/2000 CIA-RDP86-00513R000308720017-3

CHESNOKOV, V. F.

CHESNOKOV, V. F., Inzh. i, VELKIN, Ya. G., Inzh., TSIKERMAN, L. Ya., Laureat Stalinskoi Premii Kandidaty Tekhn. Nauk, MIKAYLOV, V. A., Laureat Stalinskoi Premii Kandidaty Tekhn. Nauk., DIK, V. M., Inzh.

Akademiya Kommunal'nogo Khozyaystva IM. K. D. Panfilova.

Razrabotka i eksperimental'noye issledovaniye tipovykh ustroystv dlya zashchity napornykh truboprovodov
Page 56

SO: Collection of Annotations of Scientific Research Work on Construction. completed in 1950. Moscow, 1951

APPROVED FOR RELEASE: 06/19/2000 CIA-RDP86-00513R000308720017-3"

"APPROVED FOR RELEASE: 06/19/2000 CIA-RDP86-00513R000308720017-3

22788

S/057/61/031/005/019/020
B104/B205

21.2100

AUTHORS: Chernov, N. N. and Chesnokov, V. I.

TITLE: Improvement of the stability of synchrotron parameters by stabilizing the power supply of the electromagnet

PERIODICAL: Zhurnal tekhnicheskoy fiziki, v. 31, no. 5, 1961, 627-629

TEXT: It is noted that the instabilities of the intensity and energy of gamma emission of a synchrotron are caused chiefly by the varying voltage of the power source feeding the electromagnet. The advantages of a power source independent of the industrial power system are mentioned, and the difficulties associated with the stabilization of alternating currents are discussed. The current stabilizer shown in Fig. 1 is designed for the power source of a synchrotron. Stabilization is done in such a way that the positive feedback will be proportional to the amplitude of the pick-up signal which is determined by the amount and sign of voltage variation. The stability of gamma bremsstrahlung could be increased by the use of such a stabilizer (Fig. 2) which had a stabilization coefficient of 16. The voltage fluctuations of the mains could be lowered from 10 to 0.5%.

Card 1/4

APPROVED FOR RELEASE: 06/19/2000 CIA-RDP86-00513R000308720017-3"

"APPROVED FOR RELEASE: 06/19/2000 CIA-RDP86-00513R000308720017-3

22788

S/057/61/031/005/019/020
B104/B205

Improvement of the stability...

Thus, it was also possible to improve the stability of the final electron energy and to reduce the variation in electron energy occurring with a change of the supply voltage by 10% from 0.8% to 0.05% with the use of the stabilizer described here. The variation in the final energy of the particles, caused by fluctuations in the mains, could be lowered considerably. There are 2 figures and 2 Soviet-bloc references.

ASSOCIATION: Fiziko-tekhnicheskiy institut im. A. F. Ioffe AN SSSR Leningrad (Institute of Physics and Technology imeni A. F. Ioffe, AS USSR, Leningrad)

SUBMITTED: July 6, 1960

Legend to Fig. 1: Stabilizer for the power supply of a synchrotron.

Card 2/4

APPROVED FOR RELEASE: 06/19/2000 CIA-RDP86-00513R000308720017-3"

"APPROVED FOR RELEASE: 06/19/2000 CIA-RDP86-00513R000308720017-3

Card 3/4

22788
S/057/61/031/005/019/020
B104/B205

Improvement of the stability...

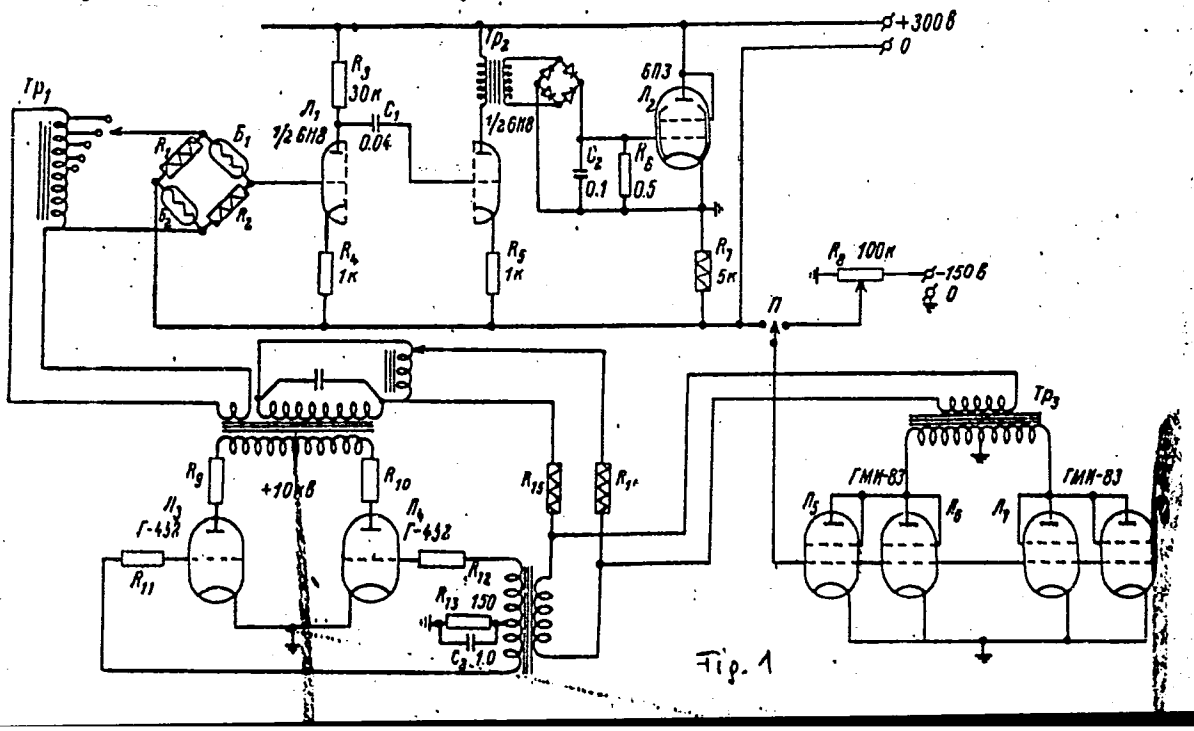

Fig. 1

APPROVED FOR RELEASE: 06/19/2000 CIA-RDP86-00513R000308720017-3"

"APPROVED FOR RELEASE: 06/19/2000 CIA-RDP86-00513R000308720017-3

22788

S/057/61/031/005/019/020
B104/B205

Improvement of the stability...

Legend to Fig. 2: Intensity of gamma emission as a function of the mains voltage. I) With stabilization; II) without stabilization.

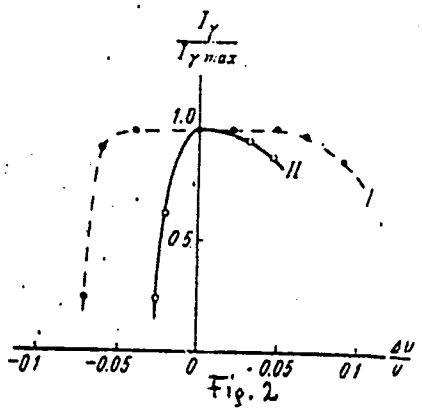

Fig. 2

Card 4/4

APPROVED FOR RELEASE: 06/19/2000 CIA-RDP86-00513R000308720017-3"

"APPROVED FOR RELEASE: 06/19/2000 CIA-RDP86-00513R000308720017-3

L 47091-65 EWT(1)/T/EEC(b)-2 Pl-4 IJP(c) GG

ACCESSION NR: AP5007029 S/0120/65/000/001/0078/0081

AUTHOR: Belyayevskiy, A. I.; Gur'yan, Yu. A.; Chesnokov, V. I.

TITLE: Calibrating large scintillation crystals

SOURCE: Pribory i tekhnika eksperimenta, no. 1, 1965, 78-81

TOPIC TAGS: scintillation crystal, scintillation crystal calibration

ABSTRACT: The flash caused by single-energy electrons isolated by a magnetic field is used for calibration of large scintillation crystals in an [illegible] shown in Enclosure 1. The electrons set up by gamma-quanta in [illegible] by analyzing magnet 3. By varying the field strength of the latt[illegible] electrons can be directed along the selected trajectory and the curves photomultiplier-pulse-amplitude vs. electron energy (20—100 Mev) can be obtained. A standard cosmic mu-meson spectrum was used for comparing the calibration of a crystal with the calibration of other similar crystals. Results of

Card 1/3

APPROVED FOR RELEASE: 06/19/2000 CIA-RDP86-00513R000308720017-3"

"APPROVED FOR RELEASE: 06/19/2000 CIA-RDP86-00513R000308720017-3

L 47091-65

ACCESSION NR: AP5007029

the calibration of NaI(Tl) 100-mm diameter and 100- and 60-mm height crystals are reported. "The authors wish to thank the employees of A. P. Komar's laboratory for their cooperation, and I. F. Bugakov for his help [illegible] electronic equipment." Orig. art. has: 6 figures and 1 table.

ASSOCIATION: Fiziko-tekhnicheskiy institut AN SSSR (Physico-Technical Institute, AN SSSR)

SUBMITTED: 29Nov63 ENCL: 01 SUB CODE: NP

NO REF SOV: 001 OTHER: 002

Card 2/3

APPROVED FOR RELEASE: 06/19/2000 CIA-RDP86-00513R000308720017-3"

"APPROVED FOR RELEASE: 06/19/2000 CIA-RDP86-00513R000308720017-3

CHESNOKOV, V.K.; MORKOVKIN, B.V.

Using extrusion techniques in forging steering knuckles for the ZIL-164 motortruck. Kuz.-shtam.proizv. 1 no.5:16-20 My '59. (MIRA 12:10)

(Extrusion (Metals))

APPROVED FOR RELEASE: 06/19/2000 CIA-RDP86-00513R000308720017-3"

"APPROVED FOR RELEASE: 06/19/2000 CIA-RDP86-00513R000308720017-3

MORKOVKIN, B.V.; CHESNOKOV, V.K.

Drop forging without flashes of third speed gear wheels for the ZIL-164 automobile. Kuz.-shtam. proizv. 1 no.9:5-9 S '59. (MIRA 12:12)

(Forging) (Automobiles--Transmission devices)

APPROVED FOR RELEASE: 06/19/2000 CIA-RDP86-00513R000308720017-3"

"APPROVED FOR RELEASE: 06/19/2000 CIA-RDP86-00513R000308720017-3

YERMOLAYEV, Ye.N.; CHESNOKOV, V.K.; VOLIK, Yu.P.

Ejection devices for drop-forging presses manufacturing crankshafts. Avt. prom. 27 no. 5:38-41 My '61. (MIRA 14:5)

1. Nauchno-issledovatel'skiy tekhnologicheskiy institut avtomobil'noy promyshlennosti.
(Power presses) (Crankshafts)

APPROVED FOR RELEASE: 06/19/2000 CIA-RDP86-00513R000308720017-3"

"APPROVED FOR RELEASE: 06/19/2000 CIA-RDP86-00513R000308720017-3

VOLIK, Yuriy Prokof'yevich; YERMOLAYEV, Yevgeniy Nikolayevich; CHESNOKOV, Viktor Kuz'mich; STEL'MAKOV, S.M., red.; FREGER, D.P., red. izd-va; BELOGUROVA, I.A., tekhn. red.

[Ejecting device for forging on crankshaft presses: stenographic record of a lecture course]Vytalkivaiushchie ustroistva pri shtampovke na krivoshipnykh goriacheshtampovochnykh pressakh; stenogramma lektsii. Leningrad, 1962. 26 p. (MIRA 15:8)

(Forging) (Power presses)

APPROVED FOR RELEASE: 06/19/2000 CIA-RDP86-00513R000308720017-3"

"APPROVED FOR RELEASE: 06/19/2000 CIA-RDP86-00513R000308720017-3

S/193/62/000/002/006/006
A004/A101

AUTHOR: Chesnokov, V. L.

TITLE: Hydrofoil cruising cutter with glass-plastic hull

PERIODICAL: Byulleten' tekhniko-ekonomicheskoy informatsii, no. 2, 1962, 74-75

TEXT: The author reports on a hydrofoil boat with glass-plastic hull, built at the "Krasnoye Sormovo" Plant and intended for pleasure cruises, tourism and official trips on rivers, lakes, reservoirs and the coastal waters of inner seas. The stability of the cutter ensures safe sailing on waves of 2 m height. The boat's hull consists of two sections - hull and deck. The sections are molded in wooden dies. The board and deck sheathing is 3 - 4 mm, that of the bilge is 5 - 6 mm thick. The necessary sheathing thickness is obtained by adequate numbers of glassfiber layers which are impregnated by polyester resins. Corrugated bulkheads, ribs and keelsons are formed in special dies, the ribs and keelsons having a T-section. The hull is divided into four compartments by three water-tight bulkheads. The hydrofoil structure of the cutter consists of two carrying foils and an additional bow foil. The foils are welded structures made of 1X18H9T (1Kh18N9T) stainless steel. A converted M-13 four-stroke carburetor

Card 1/2

APPROVED FOR RELEASE: 06/19/2000 CIA-RDP86-00513R000308720017-3"

"APPROVED FOR RELEASE: 06/19/2000 CIA-RDP86-00513R000308720017-3

engine, with which the "Chayka" cars are fitted, is used as main engine. The engine has a power of 170 HP, is started by an electric starter and is mounted on rubber shock absorbers. The engine operation can be controlled by instruments on the instrument panel. A d-c generator of the ГС -101-ОС (GS-101-OS) type and a 6СТ-68-ЭМ (6St-68-EM) storage-battery are used as electric power sources. The following technical data of the cutter are given: displacement (full) - 1.95 tons; overall draught (on the screw) during navigation - 0.85 m; draught when running on hydrofoils - 0.55 m; maximum cruising speed at full displacment - 100 km/hour; number of seats - 6; overall dimensions (length x width x height) - 8.42 x 2.44 x 0.96 m. During test runs in 1961 on calm waters a speed of 100 km/hour was reached. The good maneuverability of the cutter ensures safe sailing at the normal service speed (85 - 90 km/hour) on winding water ways. There is 1 figure.

APPROVED FOR RELEASE: 06/19/2000 CIA-RDP86-00513R000308720017-3"

"APPROVED FOR RELEASE: 06/19/2000 CIA-RDP86-00513R000308720017-3

CHESNOKOV, V.L.

Pleasure motorboat with submerged wings and a glass-reinforced plastic body. Biul.tekh.-ekon.inform. no.2:74-75 '62. (MIRA 15:3)

(Motorboats)

APPROVED FOR RELEASE: 06/19/2000 CIA-RDP86-00513R000308720017-3"

"APPROVED FOR RELEASE: 06/19/2000 CIA-RDP86-00513R000308720017-3

CHESNOKOV, V.M., inzh.

Selecting the equipment for headwater lock areas. Energ. stroi. no.2:71-76 '59 (MIRA 13:3)

1. Leningradskaya proyektnaya kontora "Gidrostal'proyekt."
(Locks (Hydraulic engineering)

APPROVED FOR RELEASE: 06/19/2000 CIA-RDP86-00513R000308720017-3"

"APPROVED FOR RELEASE: 06/19/2000 CIA-RDP86-00513R000308720017-3

GRESNOKOV, V.M., inzh.

Bearing parts of double side-hung gates. Energ. stroi. no.3: 58-60 (13), 1960. (MIRA 14:9)

1. Leningradskaya kontora "Gidrostal 'konstruktsiya".
(Gates, Hydraulic)

APPROVED FOR RELEASE: 06/19/2000 CIA-RDP86-00513R000308720017-3"

"APPROVED FOR RELEASE: 06/19/2000 CIA-RDP86-00513R000308720017-3

CHESNOKOV, V.M., elektromekhanik

Adaptor for ringing control in the stationary ZhR-3 transmitter-receiver. Avtom. telem. i sviaz' 9 no.6:29-30 Je '65. (MIRA 18:8)

1. Lyublinskaya distantsiya Moskovskoy dorogi.

APPROVED FOR RELEASE: 06/19/2000 CIA-RDP86-00513R000308720017-3"

"APPROVED FOR RELEASE: 06/19/2000 CIA-RDP86-00513R000308720017-3

ACC NR: AP6032268 SOURCE CODE: UR/0076/66/040/009/2101/2104

AUTHOR: Zercheninov, A. N.; Chesnokov, V. N.; Pankratov, A. V.

ORG: none

TITLE: Standard heat of formation of chlorodifluoramine

SOURCE: Zhurnal fizicheskoy khimii, v. 40, no. 9, 1966, 2101-2104

TOPIC TAGS: chlorodifluoramine, heat of formation, potassium iodide solution, gaseous chlorodifluoramine, liquid chlorodifluoramine, FLUORINE COMPOUND, CHLORINE COMPOUND

ABSTRACT: The standard heat of formation of chlorodifluoramine has been determined from its reaction with an aqueous solution of potassium iodide

$$NF_2Cl + I^- + H^+ \rightarrow I_2 + N_2F_4 + Cl^- + F^- + NH_4^+ + N_2. \quad (1)$$

This reaction proceeds in several steps. Selection of proper [unspecified] pH of the solution and contact time of NF_2Cl with the solution reduced reaction 1 to the reaction

$$NF_2Cl + {}^3/_2KI = KCl + {}^1/_2KI_3 + {}^1/_2N_2F_4. \quad (2)$$

NF_2Cl used in the experiments contained, in addition to N_2 and N_2O, 1 to 7% N_2F_2 whose presence caused in the calorimeter the additional reaction

$$N_2F_2 + 3KI = 2KF + KI_3 + N_2. \quad (3)$$

Card 1/4 UDC: 541.11

APPROVED FOR RELEASE: 06/19/2000 CIA-RDP86-00513R000308720017-3"

"APPROVED FOR RELEASE: 06/19/2000 CIA-RDP86-00513R000308720017-3

ACC NR: AP6032268

Table 1.

NF_2Cl content in the sample, %	Analysis of the solution						Rise of temperature in the calorimeter (Δt), deg	Calculated overall heat of reactions 2 and 3 (Q_r), cal	Calculated heat of reaction 3 (Q_3), cal	Calculated heat of reaction 2 (Q_2), cal	Heat of the reaction of NF_2Cl with KI solution ($-\Delta H_r$), kcal/mol
	Cl^-, g	F^-, g	I_2, g	Calculated amount of NF_2Cl formed, g	Calculated amount of N_2F_2, g	Calculated amount of separated I_2, g					
90,1	0,165	0,0054	0,630	0,4070	0,0094	0,627	0,6119	158,9	21,7	137,2	29,48
83,6	0,401	0,0267	1,582	0,9892	0,0464	1,614	1,5363	473,4	107,3	366,1	32,37
83,6	0,426	0,0286	1,680	1,0509	0,0497	1,716	1,5119	465,9	115,0	350,9	29,20
83,6	0,401	0,0324	1,607	0,9892	0,0563	1,652	1,4496	446,7	130,2	316,5	27,98
83,6	0,372	0,0272	1,453	0,9176	0,0473	1,513	1,2973	399,8	109,4	290,4	27,68
80,4	0,261	0,178	1,096	0,6446	0,0309	1,054	1,2773	316,2	71,5	244,7	33,20
78,5	0,283	0,0131	—	0,6981	0,0228	—	1,3024	266,9	52,7	244,2	30,60
76,6	0,179	0,0136	—	0,4416	0,0236	—	0,9327	212,7	54,6	158,1	31,31
76,6	0,322	0,0093	1,272	0,7943	0,0162	1,215	1,4212	324,0	37,5	286,5	31,55
62,1	0,376	0,0188	—	0,9275	0,0327	—	1,2577	379,8	75,6	304,2	28,69
36,1	0,556	0,0228	2,160	1,3715	0,0396	2,142	2,7240	621,1	91,6	529,5	33,77
36,1	0,315	0,0166	1,300	0,7770	0,0288	1,238	1,4973	341,4	66,6	274,8	30,93
36,1	0,333	0,0173	1,290	0,8214	0,0300	1,307	1,4967	341,2	69,4	271,8	28,94
36,1	0,279	0,0142	1,131	0,6882	0,0247	1,093	1,3242	301,9	57,1	244,8	31,11

Average ΔH_r = -30.5±1.6 kcal/mol

Card 2/4

APPROVED FOR RELEASE: 06/19/2000 CIA-RDP86-00513R000308720017-3"

"APPROVED FOR RELEASE: 06/19/2000 CIA-RDP86-00513R000308720017-3

ACC NR: AP6032268

The experiments were conducted in a calorimeter described in earlier studies by the authors. The experimental procedure is described in the source. The reacted solutions were analyzed for F^-, Cl^- and NH_4^+ ions and for separated iodine. The experimental results and the calculated heats of the reactions of NF_2Cl with KI solutions are given in Table 1. The heat of formation of gaseous NF_2Cl was calculated from a thermochemical equation which took into account the heats of formation and solution of the substances involved. The respective heat values were taken from reference books or earlier studies. The missing value of the heat of solution of KCl in KI solution was determined experimentally for a neutral 15% KI solution (Table 2). The standard heat of formation of gaseous NF_2Cl was found to be

Table 2.

G_{KCl}, g	Δt, deg	Heat of solution of KCl in a neutral 15% solution of KI (ΔH_s), kcal/mol
0.8354	-0.1755	3.67
0.8403	-0.17783	3.70
0.8540	-0.1827	3.74
0.9323	-0.19733	3.70

Average ΔH_s = 3.70±0.02 kcal/mol

Card 3/4

APPROVED FOR RELEASE: 06/19/2000 CIA-RDP86-00513R000308720017-3"

"APPROVED FOR RELEASE: 06/19/2000 CIA-RDP86-00513R000308720017-3

ACC NR: AP6032268

3.2 ± 2.9 kcal/mol. The heat of formation of liquid NF_2Cl was calculated by taking the value of 4.35 kcal/mol for the heat of vaporization of NF_2Cl at -67C (boiling point), and in the assumption that the average heat capacity of NF_2Cl in the range 298—206 K is equal to that of NF_3 (11.5 cal/mol·deg). The heat of formation of liquid NF_2Cl at -67C was found to be -2.2 kcal/mol. The N-Cl bond energy was calculated in the assumption that the N-F bond energy in NF_2Cl is equal to that in the free $NF_2^{\cdot}$ radical

$$E(N-Cl) = \Delta H^{\circ}_{f298}(Cl) + \Delta H^{\circ}_{f298}(NF_2^{\cdot}) - \Delta H^{\circ}_{f298}(NF_2Cl) = 35{,}3 \text{ kcal/mol}.$$

Orig. art. has: 3 tables.

SUB CODE: 21, 07/ SUBM DATE: 19Mar65/ ORIG REF: 005/ OTH REF: 003/

Card 4/4

APPROVED FOR RELEASE: 06/19/2000 CIA-RDP86-00513R000308720017-3"

"APPROVED FOR RELEASE: 06/19/2000 CIA-RDP86-00513R000308720017-3

CHESNOKOV, V. N.

21 (0), 24 (0)

AUTHOR: Tyagunov, G. A. SOV/89-7-2-18/24

TITLE: Scientific Conference of the MIFI (Nauchnaya konferentsiya MIFI)

PERIODICAL: Atomnaya energiya, 1959, Vol 7, Nr 2, pp 176-177 (USSR)

ABSTRACT: The yearly scientific meeting was held from 17 April to 15 May 1959 in the Moskovskiy inzhenerno-fizicheskiy institut (Moscow Physical Engineering Institute). More than 600 participants from 100 different institutes attended the 2 plenary and 18 sectional conferences. A total of 148 lectures were held. The following lectures are specially mentioned: M. K. Romanovskiy on the thermo-nuclear examinations, N. G. Basov on the physical foundations of molecular generators and amplifiers, A. I. Leypunskiy on the construction of a fast reactor, A. Ya. Pomeranchuk on the theory of the peripheral collision of mesons and nucleons, A. B. Migdal on superfluidity and momentum of inertia of the nuclei, A. S. Kompaneyets on the strong electromagnetic gravity wave, V. I. Gol'danskiy on levels which are excited within the nucleus shell and methods of comprehending them, I. L. Rozental' and L. A. Prokhorova on the analysis of the possible experiments for the determination of the measurements of the μ-mesons, V. I. Dianov-Klokov on the spectrum of liquid and crystalline hydrogen under pressure (8000-10000 atm) and an instrument for measuring the absorption curves, V. [illegible] Lyapidevskiy and O. V. Glamazdina on new application possibilities of the diffusion chamber, A. V. Shal'nov on calculation methods for linear electron accelerators with migratory waves, P. A. Ryazin, A. B. Minervin and A. I. Zaboyev on new theories of the electron capture under betatron conditions of the acceleration, Ye. G. Pyatnov on optimum wave length for a generator, S. P. Lomnev and G. A. Tyagunov on magnetic focussing in a linear electron accelerator, O. A. Val'dner, P. A. Dmitrovskiy, D. M. Zorin, Yu. V. Mizin on the 3 mev linear accelerators of the MIFI, and V. V. Kuznetskiy, O. A. Val'dner, V. V. Kotov and V. [illegible] Chesnokov on examination of the electron movement in the system of the elutron with consideration of the scattering fields, O. A. Krayev on impulse method for measuring the heat conduction capacity of liquids and the theory of this method, Ye. [illegible] Khabakhpashev, Yu. M. Il'in and D. A. Chirov on heat transmission to the eutectic Na-K which flows in a circular space, V. I. Petrovichev on heat transmission to circulating mercury, V. [illegible] Royzin on special conditions when working with a flat triode in the impulse technique, O. S. Poturayev on calculation methods and construction of an impulse transformer for instruments with semi-conductor elements, Ya. A. Khetagurov on a possibility judge the characteristics of magnetic recording of impulses, B. I. Kal'nin on the element system for a universal digital computer, Ye. S. Malov on multiple control of the parameters of technologic processes, P. I. Popov on analysis of several systems with which physical energy apparatus can be automatically started, Yu. I. Topcheyev on a method to examine the quality of a reactor control when the reactivity changes stepwise or linearily, G. A. Leont'yev and A. I. Yevstyukhin on examination of the iodine method of refining niobium and characteristics of the metal obtained, P. L. Gruzin and G. G. Ryabova on examination of the micro-distribution of carbon, tungsten, iron and other elements in zirconium and its alloys by use of auto-radiography, G. B. Fedorov on determination of the sublimation heat of zirconium and nickel by using radioactive indicators and G. B. Fedorov and A. N. Semenikhin on determination of the diffusion coefficients of chromium, nickel, iron and chromium nickel steels. The literature for all these lectures will be published by the MIFI in a symposium.

Card 1/3

Card 2/3

Card 3/3

APPROVED FOR RELEASE: 06/19/2000 CIA-RDP86-00513R000308720017-3"

"APPROVED FOR RELEASE: 06/19/2000 CIA-RDP86-00513R000308720017-3

CHESNOKOV, V. N.

PHASE I BOOK EXPLOITATION SOV/5134

Moscow. Inzhenerno-fizicheskiy institut

Uskoriteli; sbornik statey (Accelerators; Collection of Articles) Moscow, Atomizdat, 1960. 163 p. Errata slip inserted. 3,600 copies printed.

Sponsoring Agency: Ministerstvo vysshego i srednego spetsial'nogo obrazovaniya RSFSR.

Ed. (Title page): G. A. Tyagunov, Doctor of Technical Sciences, Professor; Tech. Ed.: S. N. Popova.

COVERAGE: The book contains articles by staff members of the Department of Electrophysical Installations of the MIFI (Moscow Engineering Physics Institute) reflecting theoretical and experimental investigations of linear electron accelerators, betatrons and synchrotrons; one article deals with ion sources for cyclotrons. The theoretical papers on linear electron accelerators are a continuation of a similar research paper published in the collection of articles "Lineynye uskoriteli" (MIFI edition, 1959) on the dynamics of particles in these machines. The theoretical papers on particle trapping for acceleration conditions in betatrons and synchrotrons contain a mathematical solution of this problem which takes into account the collective interaction of particles in the beam and the inductive properties of that beam at the moments of onset and break. A number of experimental investigations deals with measurements at shf and with electron accelerator and betatron components, while a special study is concerned with the linear cyclic accelerator ("elutron") proposed a few years ago by one of the coauthors of the article in question. No personalities are mentioned. References accompany most of the articles.

TABLE OF CONTENTS:

Zaborov, A. I. Investigation of Radial Electron Oscillations in a Betatron During the Injection Period, Taking Into Account Their Interaction 105

Lomnev, S. P. Elucidating the Accuracy of the Solution of the Equation of Particle Motion in a Betatron 119

Sobenin, N. P. Comparison of Phasometric Circuits 125

Sobenin, N. P. New Method of Connecting a Phasometer Circuit With a Septate Waveguide 136

Sobenin, N. P., and R. K. Gavrilova. Absorbing Load for Septate Waveguides 140

Nastrukha, A. I., I. I. Afanas'yev, and L. N. Mikhaylov. Mass-Spectrometer Installation For the Investigation of Ion Sources 149

Kuznetskiy, V. V., A. A. Val'dner, V. V. Kotov, and V. N. Chesnokov. Research on Electron Motion in the Magnetic System of the "Elutron" Taking Into Account Stray Fields 153

AVAILABLE: Library of Congress

JP/dwm/oe
5/12/61

Card 5/5

APPROVED FOR RELEASE: 06/19/2000 CIA-RDP86-00513R000308720017-3"

"APPROVED FOR RELEASE: 06/19/2000 CIA-RDP86-00513R000308720017-3

CHESNOKOV, V.N.

Nomogram for constructing outcrops on a map. Razved. i okh. nedr 26 no.9:53-56 S '60. (MIRA 15:7)

1. Kompleksnaya tematicheskaya ekspeditsiya.
(Geology—Maps) (Nomography (Mathematics))

APPROVED FOR RELEASE: 06/19/2000 CIA-RDP86-00513R000308720017-3"

"APPROVED FOR RELEASE: 06/19/2000 CIA-RDP86-00513R000308720017-3

ACC NR: AP6032268 SOURCE CODE: UR/0076/66/040/009/2101/2104

AUTHOR: Zercheninov, A. N.; Chesnokov, V. N.; Pankratov, A. V.

ORG: none

TITLE: Standard heat of formation of chlorodifluoramine

SOURCE: Zhurnal fizicheskoy khimii, v. 40, no. 9, 1966, 2101-2104

TOPIC TAGS: chlorodifluoramine, heat of formation, potassium iodide solution, gaseous chlorodifluoramine, liquid chlorodifluoramine, FLUORINE COMPOUND, CHLORINE COMPOUND

ABSTRACT: The standard heat of formation of chlorodifluoramine has been determined from its reaction with an aqueous solution of potassium iodide

$$NF_2Cl + I^- + H^+ \rightarrow I_2 + N_2F_4 + Cl^- + F^- + NH_4^+ + N_2. \quad (1)$$

This reaction proceeds in several steps. Selection of proper [unspecified] pH of the solution and contact time of NF_2Cl with the solution reduced reaction 1 to the reaction

$$NF_2Cl + {}^3/_2KI = KCl + {}^1/_2KI_3 + {}^1/_2N_2F_4. \quad (2)$$

NF_2Cl used in the experiments contained, in addition to N_2 and N_2O, 1 to 7% N_2F_2 whose presence caused in the calorimeter the additional reaction

$$N_2F_2 + 3KI = 2KF + KI_3 + N_2. \quad (3)$$

APPROVED FOR RELEASE: 06/19/2000 CIA-RDP86-00513R000308720017-3"

"APPROVED FOR RELEASE: 06/19/2000 CIA-RDP86-00513R000308720017-3

ACC NR: AP6032268

Table 1.

NF_2Cl content in the sample, %	Analysis of the solution						Rise of temperature in the calorimeter (Δt), deg	Calculated overall heat of reactions 2 and 3 (Q_r), cal	Calculated heat of reaction 3 (Q_3), cal	Calculated heat of reaction 2 (Q_2), cal	Heat of the reaction of NF_2Cl with KI solution ($-\Delta H_r$), kcal/mol
	Cl^-, g	F^-, g	I_2, g	Calculated amount of NF_2Cl formed, g	Calculated amount of N_2F_2, g	Calculated amount of separated I_2, g					
90,1	0,165	0,0054	0,630	0,4070	0,0094	0,627	0,6119	158,9	21,7	137,2	29,48
83,6	0,401	0,0267	1,582	0,9892	0,0464	1,614	1,5363	473,4	107,3	366,1	32,37
83,6	0,426	0,0286	1,680	1,0509	0,0497	1,716	1,5119	465,9	115,0	350,9	29,20
83,0	0,401	0,0324	1,607	0,9892	0,0563	1,652	1,4496	446,7	130,2	316,5	27,98
83,6	0,372	0,0272	1,453	0,9176	0,0473	1,513	1,2973	399,8	109,4	290,4	27,68
80,4	0,261	0,178	1,096	0,6446	0,0309	1,054	1,2773	316,2	71,5	244,7	33,20
78,5	0,283	0,0131	—	0,6981	0,0228	—	1,3024	266,9	52,7	244,2	30,60
76,6	0,179	0,0136	—	0,4416	0,0236	—	0,9327	212,7	54,6	158,1	31,31
76,6	0,322	0,0093	1,272	0,7943	0,0162	1,215	1,4212	324,0	37,5	286,5	31,55
62,1	0,376	0,0188	—	0,9275	0,0327	—	1,2577	379,8	75,6	304,2	28,69
36,1	0,656	0,0228	2,160	1,3715	0,0396	2,142	2,7240	621,1	91,6	529,5	33,77
36,1	0,315	0,0168	1,300	0,7770	0,0288	1,238	1,4973	341,4	66,6	274,8	30,93
36,1	0,333	0,0173	1,290	0,8214	0,0300	1,307	1,4967	341,2	69,4	271,8	28,94
36,1	0,279	0,0142	1,131	0,6882	0,0247	1,093	1,3242	301,9	57,1	244,8	31,11

Average ΔH_r = -30.5±1.6 kcal/mol

Card 2/4

APPROVED FOR RELEASE: 06/19/2000 CIA-RDP86-00513R000308720017-3"

"APPROVED FOR RELEASE: 06/19/2000 CIA-RDP86-00513R000308720017-3

ACC NR: AP6032268

The experiments were conducted in a calorimeter described in earlier studies by the authors. The experimental procedure is described in the source. The reacted solutions were analyzed for F^-, Cl^- and NH_4^+ ions and for separated iodine. The experimental results and the calculated heats of the reactions of NF_2Cl with KI solutions are given in Table 1. The heat of formation of gaseous NF_2Cl was calculated from a thermochemical equation which took into account the heats of formation and solution of the substances involved. The respective heat values were taken from reference books or earlier studies. The missing value of the heat of solution of KCl in KI solution was determined experimentally for a neutral 15% KI solution (Table 2). The standard heat of formation of gaseous NF_2Cl was found to be

Table 2.

G_{KCl}, g	Δt, deg	Heat of solution of KCl in a neutral 15% solution of KI (ΔH_s), kcal/mol
0.8354	-0.1755	3.67
0.8403	-0.17783	3.70
0.8540	-0.1827	3.74
0.9323	-0.19733	3.70

Average ΔH_s = 3.70±0.02 kcal/mol

Card 3/4

APPROVED FOR RELEASE: 06/19/2000 CIA-RDP86-00513R000308720017-3"

"APPROVED FOR RELEASE: 06/19/2000 CIA-RDP86-00513R000308720017-3

ACC NR: AP6032268

3.2 ± 2.9 kcal/mol. The heat of formation of liquid NF_2Cl was calculated by taking the value of 4.35 kcal/mol for the heat of vaporization of NF_2Cl at -67C (boiling point), and in the assumption that the average heat capacity of NF_2Cl in the range 298—206 K is equal to that of NF_3 (11.5 cal/mol·deg). The heat of formation of liquid NF_2Cl at -67C was found to be -2.2 kcal/mol. The N-Cl bond energy was calculated in the assumption that the N-F bond energy in NF_2Cl is equal to that in the free $NF_2^{\cdot}$ radical

$$E(N-Cl) = \Delta H^{\circ}_{f298}(Cl) + \Delta H^{\circ}_{f298}(NF_2^{\cdot}) - \Delta H^{\circ}_{f298}(NF_2Cl) = 35.3 \text{ kcal/mol}.$$

Orig. art. has: 3 tables.

SUB CODE: 21, 07/ SUBM DATE: 19Mar65/ ORIG REF: 005/ OTH REF: 003/

Card 4/4

APPROVED FOR RELEASE: 06/19/2000 CIA-RDP86-00513R000308720017-3"

"APPROVED FOR RELEASE: 06/19/2000 CIA-RDP86-00513R000308720017-3

Chesnokov, V.V.

CHESNOKOV, V.V., kand. tekhn. nauk.

Planning the course of technological preparations for lot production at an airplane plant. Trudy MAI no.91:106-114 '57.
(Airplane industry) (MIRA 10:12)

APPROVED FOR RELEASE: 06/19/2000 CIA-RDP86-00513R000308720017-3"

"APPROVED FOR RELEASE: 06/19/2000 CIA-RDP86-00513R000308720017-3

ANDRIANOV, D.P., doktor ekon. nauk, prof.; GENDEL'MAN, M.Z., kand. tekhn. nauk, dots.; GLICHEV, A.V., kand. ekon. nauk, dots.; DIDENKO, S.I., kand. ekon. nauk, dots.; ZHURAVLEV, A.N., kand. tekhn.nauk, prof.; ZAKHAROV, K.D., kand. tekhn.nauk,, dots.; MOISEYEV, S.V., kand. tekhn. nauk, dots.; OL'SHEVETS, L.M., kand. tekhn. nauk, dots.; ORLOV, N.A., prof.; POPOV, P.G., ispolnyayushchiy obyazannosti dots.; SARKISYAN, S.A., kand. ekon. nauk, dots.; STARIK, D.E., kand. tekhn.nauk, ispolnyayushchiy obyazannosti dots.; TER-MARKARYAN, A.N., kand. tekhn. nauk, prof.; TIKHOMIROV, V.I., kand. tekhn.nauk, prof.; CHESNOKOV, V.V., kand. ekon. nauk, dots.; SHERMAN, Ye.I., kand. ekon. nauk, dots.; EL'BERT, L.M., kand. ekon. nauk, dots.; LAPSHIN, A.A., dots., retsenzent; NOVATSKIY, V.F., kand. ekon. nauk, red.; TUHYANSKAYA, F.G., red. izd-va; KARPOV, I.I., tekhn. red.

[Organization, planning and economics of airplane production] Organizatsiia, planirovanie i ekonomika aviatsionnogo proizvodstva. [By] D.P.Andrianov i dr. Moskva, Oborongiz, 1963. 694 p. (MIRA 16:10)

(Airplane industry--Management)

APPROVED FOR RELEASE: 06/19/2000 CIA-RDP86-00513R000308720017-3"

"APPROVED FOR RELEASE: 06/19/2000 CIA-RDP86-00513R000308720017-3

L 02216-66 EWT(1)/EWG(m)/T IJP(c) GG

ACC NR: AP5025705 SOURCE CODE: UR/0286/65/000/018/0056/0056

44,55

AUTHOR: Chesnokov, V. V.

56

ORG: none

7,44,55 B

TITLE: A method for making an autoelectronic pellicular electrode system. Class 21, No. 174727

SOURCE: Byulleten' izobreteniy i tovarnykh znakov, no. 18, 1965, 56

TOPIC TAGS: electrode, field emission, thin film circuit, dielectric layer

21,44,55

ABSTRACT: This Author Certificate presents a method for preparing an autoelectronic pellicular electrode system. The system consists of a cathode and an extraction electrode. Conducting films of these electrodes are vaporized on a dielectric backing. To simplify the process of making an electrode system that is divided by an insulating space, a film is vaporized onto the backing of the cathode and extraction electrode simultaneously at an acute angle from a point source. The source is located on the side of the extraction electrode.

SUB CODE: 09/ SUBM DATE: 08Jul64

JW

Card 1/1

UDC: 621.385.032.011.212

APPROVED FOR RELEASE: 06/19/2000 CIA-RDP86-00513R000308720017-3"

"APPROVED FOR RELEASE: 06/19/2000 CIA-RDP86-00513R000308720017-3

CHESNOKOV, V.Ye. (Pushkina Kirovskoy oblasti)

Visual aid for demonstrating the symmetry of certain figures. Mat. v shkole no.6:17 N-D '54. (MLRA 7:11)
(Geometry--Study and teaching)

APPROVED FOR RELEASE: 06/19/2000 CIA-RDP86-00513R000308720017-3"

"APPROVED FOR RELEASE: 06/19/2000 CIA-RDP86-00513R000308720017-3

Chernokov, Ya. I.

PHASE I BOOK EXPLOITATION SOV/5731

Akademiya nauk SSSR. Institut goryuchikh iskopayemykh

Gazifikatsiya i goreniye topliva (Fuel Gasification and Combustion) Moscow, Izd-vo AN SSSR, 1959. 227 p. (Series: Its: Trudy, Vol 11) Errata slip inserted. 1,800 copies printed.

Ed.: N. V. Lavrov; Ed. of Publishing House: V. N. Pokrovskiy; Tech. Ed.: I. N. Borokhina.

PURPOSE: This collection of articles is intended for scientific research workers and engineers studying combustion processes and solid fuel gasification.

COVERAGE: This collection concerns the theoretical and experimental study of the mechanism of chemical reactions occurring in combustion and gasification. Results of the isotopic method of studying the gas generating process and its reactions, and the reaction of carbon monoxide and heated coal are analyzed and the pilot plants used in this study are described. Reactions of coal combustion, coal oxidation, methane dissociation and conversion are discussed and their equilibrium constants given in tables. The processes of methane oxidation by oxygen and synthesis-gas production by oxidizing natural gas with the subsequent reduction of oxidation products by carbon are analyzed as is the effect of an excessive amount of air on the burning process of powdered solid fuel. The utilization of heavy petroleum residue and tar for combustion and gasification purposes is also discussed along with the principles of fluidization. Analysis, routine control and intensification of physical and chemical processes by means of ultrasonic vibrations are also covered. No personalities are mentioned. References accompany all but the first article.

TABLE OF CONTENTS:

Lavrov, N.V., V.V. Korobov, V.I. Filippova, and I. I. Chernenkov. Thermodynamics of Gasification Reactions 23

Galushko, P.N., and B.V. Kantorovich. Kinetics of the Reaction of Carbon With Carbon Dioxide and Steam 39

Chernenkov, I.I. Thermodynamic Analysis of Methane Oxidation Induced by Oxygen With Subsequent Reduction of Oxidation Products by the Carbon in Fuel 46

Lavrov, N.V., I.I. Chernenkov, and V.V. Korobov. Experimental Study of the Process of Producing Synthesis Gas by Natural Gas Oxidation Induced by Oxygen With Subsequent Reduction of Oxidation Products by the Carbon in Fuel 56

Al'tshuler, V.S., and G.A. Shafir. Thermodynamic Study of the Process of Methane Conversion Achieved Under High Pressure by Steam and Carbon Dioxide 66

Lavrov, N.V., and K.B. Trifonova. Study of the Methane Conversion Reaction Induced by Steam in Conjunction With the Underground Gasification of Coal 75

Finyagin, A.P. Experimental Study of the Effect of Excessive Air on the Process of Combustion of a Powdered Solid Fuel Stream 82

Bogdanov, I.F., K.M. Burtsev, V.V. Korobov, N.V. Lavrov, and A.M. Mosin. Organic Synthesis From Carbon Monoxide and Steam 91

Lavrov, N.V., and M.A. Samarskaya. Organic Synthesis From Carbon Monoxide and Steam 100

Gavrilova, A.A. Study of Kinetics of the Reduction of Iron Oxide by Carbon 105

Delyagin, G.N. Experimental Study of Combustion and Heat Exchange Processes During Burning of a Liquid Fuel Spray in a Cylindrical Combustion Chamber Under Pressure 113

Derman, B. M. Stoichiometric Analysis of Chemical Reactions of the Combustion Process and of Carbon Gasification 127

V'yugova, G.Ya., and Ya.I. Chernokov. Analysis of the Process of Burning Coal in a Layer by the Method of Similitude 133

APPROVED FOR RELEASE: 06/19/2000 CIA-RDP86-00513R000308720017-3"

"APPROVED FOR RELEASE: 06/19/2000 CIA-RDP86-00513R000308720017-3

CHESNOKOV, YE. N.

CHESNOKOV, YE. N. -- "The Struggle of S. I. Vavilov for Materialism Against Idealism in Physics." Cand Philos Sci, Acad of Social Sciences, Central Committee of the CPSU, Moscow 1953. (Referativnyy Zhurnal--Fizika Jan 54)

SO: SUM: 168, 22 July 1954

APPROVED FOR RELEASE: 06/19/2000 CIA-RDP86-00513R000308720017-3"

"APPROVED FOR RELEASE: 06/19/2000 CIA-RDP86-00513R000308720017-3

CHESNOKOV, Ye.N., kandidat filosofskikh nauk.

Science of a socialist country. Nauka i zhizn' 21 no.11:1-3 N '54. (MLRA 7:12)

(Science)

APPROVED FOR RELEASE: 06/19/2000 CIA-RDP86-00513R000308720017-3"

"APPROVED FOR RELEASE: 06/19/2000 CIA-RDP86-00513R000308720017-3

30(9) SOV/30-59-1-47/57

AUTHOR: Chesnokov, Ye. N., Candidate of Philosophical Sciences

TITLE: Problems Concerning Philosophy of Modern Natural Science (Filosofskiye voprosy sovremennogo yestestvoznaniya)

PERIODICAL: Vestnik Akademii nauk SSSR, 1959, Nr 1, pp 132-138 (USSR)

ABSTRACT: At the end of October last year an All-Union conference took place which dealt with these problems. The conference had been convened by the Akademiya nauk (Academy of Sciences) and the Ministerstvo vysshego obrazovaniya SSSR (Ministry of Higher Education of the USSR). More than 600 well-known experts in the spheres of sciences and philosophy took part, among them Academicians and Corresponding Members, Academy of Sciences, USSR, representatives of the Academies of the Union Republics and Branch Academies as well as scientists from scientific research institutes and universities. Scientific representatives from Bulgaria, Rumania, Germany, Hungary and Czechoslovakia were guests. It was the aim of the conference to unite the creative powers of Soviet philosophers and scientists for the purpose of a dialectic-materialistic generalization of the achievements of modern science and for raising its level which is intended to contribute towards a solution of the most

Card 1/4

APPROVED FOR RELEASE: 06/19/2000 CIA-RDP86-00513R000308720017-3"

"APPROVED FOR RELEASE: 06/19/2000 CIA-RDP86-00513R000308720017-3

SOV/30-59-1-47/57

Problems Concerning Philosophy of Modern Natural Science

dealt with cybernetics and natural science.
V. A. Ambartsumyan, Academician, spoke about some methodical problems of cosmogony.
V. A. Engel'gardt, Academician, and G. M. Frank, Corresponding Member, AMS USSR reported on the role of physics and chemistry in investigating biological problems.
A. I. Oparin, Academician spoke about the formation of life in the light of the achievements of modern natural science.
N. I. Grashchenkov's report dealt with the Lenin's reflex theory and modern physiology of the sensual organs.
A. Z. Zhmudskiy opposed the opinion expressed by M. E. Omel'-yanovskiy who said that in the capitalist countries a crisis in physics is approaching.
D. I. Blokhintsev, Ya. Terletskiy, D. D. Ivanenko, T. A. Lebedev, E. Ya. Kol'man, V. V. Perfil'yev took part in the discussion of the report delivered by V. A. Fok.
M. F. Shirokov opposed A. D. Aleksandrov's view concerning the general theory of relativity. V. I. Sviderskiy, A. L. Zel'-manov, A. A. Tyapkin also took part in the discussion of A. D. Aleksandrov's report.
G. I. Naan, A. L. Zel'manov took part in the discussion of the

Card 3/4

APPROVED FOR RELEASE: 06/19/2000 CIA-RDP86-00513R000308720017-3"

"APPROVED FOR RELEASE: 06/19/2000 CIA-RDP86-00513R000308720017-3

SOV/30-59-1-47/57

Problems Concerning Philosophy of Modern Science

report given by V. A. Ambartsumyan.
G. V. Nikol'skiy, P. K. Anokhin, G. V. Platonov took part in the discussion of the report by S. L. Sobolev and A. A. Lyapunov.
V. L. Ryzhkov, N. M. Sisakyan and I. Panchev (Bulgaria) participated in the discussion of the report delivered by V. A. Engel'gardt and G. M. Frank.
Yu. P. Frolov, V. N. Kolbanovskiy, S. L. Rubinshteyn participated at the discussion of the report by N. I. Grashchenkov.
P. N. Fedoseyev, Corresponding Member, Academy of Sciences, USSR concluded the conference. The results obtained at the conference were discussed at a joint meeting of the Prezidium Akademii nauk SSSR (Presidium of the AS USSR) and the Kollegiya Ministerstva vysshego obrazovaniya SSSR (Board of the Ministry of Higher Education of the USSR) on January 2, 1959. Measures were outlined for the intensification of working out philosophical problems of modern science.
There is 1 Soviet reference.

Card 4/4

APPROVED FOR RELEASE: 06/19/2000 CIA-RDP86-00513R000308720017-3"

"APPROVED FOR RELEASE: 06/19/2000 CIA-RDP86-00513R000308720017-3

SOV/26-59-4-12/15

AUTHORS: Chesnokov, Ye.N., and Troshin, D.M. (Moscow)

TITLE: Philosophical Problems of Present Natural Science (Filosofskiye problemy sovremennogo yestestvoznaniya)

PERIODICAL: Priroda, 1959, Nr 4, pp 53-58 (USSR)

ABSTRACT: The Presidium of the Akademiya nauk SSSR (AS USSR) and the Ministerstvo vysshego obrazovaniya SSSR (USSR Ministry of Higher Education) convened an All-Union Conference on Philosophical Problems in Natural Science, which took place in Moscow from 21 to 25 October 1958. Apart from leading Soviet scientists, representatives of East-block countries participated as guests. The opening speeches were made by Academician A.N. Nesmeyanov, President of the AS USSR, and by Academician K.V. Ostrovityanov, Head of the Orgkomitet Soveshchaniya (Organization Committee of the Conference). The conference heard the following reports: Academician M.B. Mitin on the permanent importance of Lenin's "Materialism

Card 1/5

APPROVED FOR RELEASE: 06/19/2000 CIA-RDP86-00513R000308720017-3"

"APPROVED FOR RELEASE: 06/19/2000 CIA-RDP86-00513R000308720017-3

and Empiro-Criticism" for present natural science; M.E. Omel'yanovskiy, Academician of the AS UkrSSR, on the great importance of Lenin's philosophical inheritance for modern physics; B.M. Kedrov, Doctor of Philosophical Sciences, on the correlation of movement forms of matter in nature; V.A. Fok, on theoretical problems of quantum mechanics, mentioning in this connection A.D. Aleksandrov, N. Bor, D.I. Blokhintsev, L. de Broglie, D. Bom and Zh. Vizh'ye; A.D. Aleksandrov, Corresponding Member AS USSR, on problems of the theory of relativity; S.L. Sobolev, Academician, and Professor A.A. Lyapunov on the practical side of cybernetics; Academician V.A. Ambartsumyan on qualitative differences in the structure of a cosmic system of various order; Academician V.A. Engel'gardt and G.M. Frank, Corresponding Member of the AMN USSR, on problems of physical, chemical and biological movement forms of matter; Academician A.I. Oparin on

APPROVED FOR RELEASE: 06/19/2000 CIA-RDP86-00513R000308720017-3"

"APPROVED FOR RELEASE: 06/19/2000 CIA-RDP86-00513R000308720017-3

SOV/26-59-4-12/43

Philosophical Problems of Present Natural Science

his hypothesis of the origin of life; N.I. Grashchenkov, Corresponding Member AS USSR, on "Lenin's Theory of Reflection and Modern Physiology of the Organs of Sense". The following scientists participated in discussing and criticizing the papers read at this Conference: Academician A.M. Deborin, Professor V.P. Chertkov, Professor V.I. Sviderskiy, Professor A.Z. Zhmudskiy (Kiyev), Marculescu-Hurduc Ileana, Senior Research Assistant of the Rumanian Institut filosofii (Institute of Philosophy), M.N. Rutkevich (Sverdlovsk), V.D. Kivenko (Rostov-na-Donu), A.I. Ignatov, N.A. Varvarov, P.G. Kuznetsov, Professor G.A. Mashtaler (Kiyev), M.I. Shakhparonov, I. Panchev (Bulgaria), B.V. Yerofeyev, Academician of the Belorussian AS, D.I. Blokhintsev, Corresponding Member AS USSR, Professor Ya.P. Terletskiy, D.D. Ivanenko, T.A. Lebedev, E. Kol'man, V. Perfil'yev (Irkutsk), Professor M.F. Shirokov, P.K. Anokhin, Academician of the AMN USSR, G.V.

Card 3/5

APPROVED FOR RELEASE: 06/19/2000 CIA-RDP86-00513R000308720017-3"

"APPROVED FOR RELEASE: 06/19/2000 CIA-RDP86-00513R000308720017-3

Philosophical Problems of Present Natural Science SOV/26-59-4-12/43

Nikol'skiy, Corresponding Member of AS USSR, G.I. Naan, Academician of the Estonian AS, S.L. Rubinshteyn, Member-Correspondent of AS USSR, A.L. Zel'manov, Senior Research Assistant of the Astronomicheskiy institut im. P.K. Shternberga (Institute of Astronomy imeni P.K. Shternberg); B.V. Gnedenko, Academician of the AS UkrSSR, A.A. Markov, Corresponding Member AS USSR and Professor S.A. Yanovskaya reported on philosophical problems in mathematics and their importance in natural science; N.M. Sisakyan, Corresponding Member of AS USSR, on philosophical problems in biochemistry, Academician A.I. Oparin on the theory of the origin of life, mentioning A.S. Konikov, Doctor of Biological Sciences and A.I. Ignatov, Candidate of Philosophical Sciences; Professor I. Panchev on the important philosophical problem of the qualitative difference between the animate and inanimate. On 2 Janu-

Card 4/5

APPROVED FOR RELEASE: 06/19/2000 CIA-RDP86-00513R000308720017-3"

"APPROVED FOR RELEASE: 06/19/2000 CIA-RDP86-00513R000308720017-3

SOV/26-59-4-12/43

Philosophical Problems of Present Natural Science

ary, a joint session of the Presidium of the AS USSR and the Kollegiya Ministerstva vysshego obrazovaniya SSSR (Board of the Ministry of Higher Education of the USSR) discussed the results of the above-mentioned conference.

Card 5/5

APPROVED FOR RELEASE: 06/19/2000 CIA-RDP86-00513R000308720017-3"

"APPROVED FOR RELEASE: 06/19/2000 CIA-RDP86-00513R000308720017-3

SHAPKIN, I. F., KOCHNEVA, YE. G., CHESNOKOV, YE. YE.

Feed Water Purification

Testing of soda regenerative water softening equipment with a tubular reactor. Energ. biul. No. 3, 1952.

SO: Monthly List of Russian Accessions, Library of Congress, June 1952 1953, Uncl.

APPROVED FOR RELEASE: 06/19/2000 CIA-RDP86-00513R000308720017-3"

"APPROVED FOR RELEASE: 06/19/2000 CIA-RDP86-00513R000308720017-3

26.2532
9.4174

86135

S/112/59/000/012/077/097
A052/A001

Translation from: Referativnyy zhurnal, Elektrotekhnika, 1959, No. 12, p. 218, # 25418

AUTHORS: Cherkasskiy, A.Kh., Chesnokov, Ye.Ye.

TITLE: Thermoelectric Generator for Power Supply of Radio Receivers

PERIODICAL: Tyazh. prom-st' Podmoskov'ya, 1958, No. 1, pp. 50-53

TEXT: Thermoelectric heat generator ТЭГК-2-2 (TEGK-2-2) has 2 independent filament and anode (with a grid output) thermoelectric batteries which are 14 equal symmetrically arranged bars of (8-10) x 92 x 24 mm clamped by means of screws to a hollow 14-hedral metal piece heated with a 20-line petroleum lamp "Молния" ("Molniya"). An alloy of 65% Sb and 35% Zn (with a small percentage of other admixtures) which can be heated up to 400°C serves as the positive arm of each element; the negative arm is constantan (40% Ni and 60% Cu) making up only 10% of the total weight of the element. The temperature of heated facets of the thermal units reaches 350-380°C, that of opposite ones contacting the cooled aluminum ribs reaches 70-80°C. Three units of the filament battery differ from

Card 1/2

APPROVED FOR RELEASE: 06/19/2000 CIA-RDP86-00513R000308720017-3"

"APPROVED FOR RELEASE: 06/19/2000 CIA-RDP86-00513R000308720017-3

86135

S/112/59/000/012/077/097
A052/A001

Thermoelectric Generator for Power Supply of Radio Receivers

11 anode batteries by a larger cross-section. Load characteristics for both batteries are given which enable one to judge on their suitability for the power supply of "РОДИНА -52" ("Rodina-52"), "Новь" ("Nov'"), "Искра" ("Iskra"), and others. Filament and anode units can be also used independently (for instance, in automatic control systems). The height of the heat generator with a supporting appliance is 1 m, the greatest diameter of the thermal head is 0.3 m, weight is 8 kg, service time ≥ 6,000 hours, heating time is 15 min.

B.M.M.

Translator's note: This is the full translation of the original Russian abstract.

Card 2/2

APPROVED FOR RELEASE: 06/19/2000 CIA-RDP86-00513R000308720017-3"

"APPROVED FOR RELEASE: 06/19/2000 CIA-RDP86-00513R000308720017-3

CHESNOKOV, Yu., mayor

Determining the characteristics of aerial targets. Voen. vest. 41 no.1:83 Ja '62. (MIRA 16:11)

APPROVED FOR RELEASE: 06/19/2000 CIA-RDP86-00513R000308720017-3"

"APPROVED FOR RELEASE: 06/19/2000 CIA-RDP86-00513R000308720017-3

ZHARKOVSKIY, A.G., podpolkovnik, kand. fiziko-matem. nauk; SMIRNOVA, V.I.; starsh. 7 inzhener; TROYANOV, G.A., insh.-kapitan 3-go ranga; CHESNOKOV, Yu.I., insh. kapitan 2-go ranga.

Stochastic model of the movement of an object in the sea. Mor. sbor. 49 no. 12:26-29 D '65 (MIRA 19:1)

APPROVED FOR RELEASE: 06/19/2000 CIA-RDP86-00513R000308720017-3"

"APPROVED FOR RELEASE: 06/19/2000 CIA-RDP86-00513R000308720017-3

L 39102-66

ACC NR: AP6015398 (N) SOURCE CODE: UR/0385/65/000/012/0026/0029

AUTHOR: Zharkovskiy, A. G. (Candidate of physico-mathematical sciences, Lieutenant colonel); Smirnova, V. I. (Senior engineer); Troyanov, G. A. (Engineer, Lieutenant commander); Chesnokov, Yu. I. (Commander, Engineer)

ORG: none

TITLE: A stochastic model of the motion of an object at sea

SOURCE: Morskoy sbornik, no. 12, 1965, 26-29

TOPIC TAGS: stochastic process, naval tactic, model theory

ABSTRACT: The problem of predicting the movement of enemy vessels at sea is discussed. Initial data are based upon observations of an enemy vessel for a limited period of time. Trajectories can be computed on the basis of random values for turn angles and the times on various courses. The application of the stochastic method in constructing a model for the zigzag movement of an object at sea is described. A detailed example of the formulation of the problem in ALGOL-60 language is given. Orig. art. has: 7 formulas.

SUB CODE: 09,12 SUBM DATE: none/ OTH REF: 001

Card 1/1 mcp

APPROVED FOR RELEASE: 06/19/2000 CIA-RDP86-00513R000308720017-3"

"APPROVED FOR RELEASE: 06/19/2000 CIA-RDP86-00513R000308720017-3

L 52755-65 EWT(1)/EWG(v)/FCC/EEC(t) Pe-5/Pi-4 GS/GW

ACCESSION NR: AT5011166 UR/0000/64/000/000/0128/0134

AUTHOR: Chesnokov, Yu. M.

TITLE: Indicatrix of scattering of polydisperse water clouds in the visible region of the spectrum

SOURCE: Mezhvedomstvennoye soveshchaniye po aktinometrii i optike atmosfery, 5th, Mos[illegible] Aktinometriya i optika atmosfery (Actinometry and [illegible] Trudy soveshchaniya. Moscow, Izd-vo Nauka, 1964, 128-134

TOPIC TAGS: cloud, atmospheric physics, rainbow, scattering indicatrix, light scattering

ABSTRACT: The following formulas can be used for computing the indicatrix of scattering of a polydisperse cloud

$$X(\gamma) = \frac{\sum_p \frac{1}{p^2} [i_1(\gamma) + i_2(\gamma)] P(p)}{\sum_p P(p)}; \quad (1)$$

$$P(p) = \frac{\sum_\lambda n(a) a^3 S(\lambda) I(\lambda) e^{-\tau_1(\lambda)} e^{-\tau_2(\lambda)}}{\sum_\lambda S(\lambda) I(\lambda) e^{-\tau_1(\lambda)} e^{-\tau_2(\lambda)}}. \quad (2)$$

Card 1/3

APPROVED FOR RELEASE: 06/19/2000 CIA-RDP86-00513R000308720017-3"

"APPROVED FOR RELEASE: 06/19/2000 CIA-RDP86-00513R000308720017-3

L 52755-65

ACCESSION NR: AT5011166

Here, $X(\gamma)$ is the normalized indicatrix for a polydisperse cloud; and γ is the angle of scattering (angle between the directions of the incident and scattered rays). The indicatrix is normalized if

$$\frac{1}{2}\int_0^{\pi} X(\gamma)\sin\gamma d\gamma = 1, \qquad (3)$$

where $i_1(\gamma)$ and $i_2(\gamma)$ are the intensities of scattered radiation in two polarization planes, computed using the Mie formulas, $P(\rho)$ is the weight assigned to the indicatrix for each ρ, $S(\lambda)$ is the spectral sensitivity of the radiation detector, $I(\lambda)$ is the spectral intensity of solar radiation at the upper boundary of the atmosphere, $\tau_1(\lambda)$ is the spectral optical thickness of the layer above the cloud, and $\tau_2(\lambda)$ is the spectral optical thickness of the layer of the atmosphere between the sensor and the cloud. Formulas (1) and (2) were used to compute four indicatrices for polydisperse clouds. It was found that the indicatrices of polydisperse clouds are smoothed considerably in comparison with the indicatrices of individual drops. Maxima are retained in the region γ = 140° (rainbow) and γ [illegible]. A rainbow should be observed in all water clouds, and also a glory. There are no [illegible] in ice clouds. Therefore, drop clouds can be distinguished from crystal [illegible] basis of the presence or absence of a rainbow. From the position of the [illegible] or glory on a television or photographic picture it is possible to determine [illegible]

Card 2/3

APPROVED FOR RELEASE: 06/19/2000 CIA-RDP86-00513R000308720017-3"

"APPROVED FOR RELEASE: 06/19/2000 CIA-RDP86-00513R000308720017-3

L 52755-65

ACCESSION NR: AT5011166

of the television set or camera in space. The region of angles of scattering close to 180° is the most sensitive to change of drop size in a cloud, except for the region of small scattering angles. The effective size of drops in clouds can therefore be judged from observations of the brightness of clouds in the region of large scattering angles. With the exception of the region of small scattering angles, the indicatrices of water clouds of different microstructure differ very little from one another. Therefore, a single computed indicatrix can be used to solve a whole series of practical problems, especially computations of the angular distribution of scattered light at the upper boundary of a water-drop cloud, regardless of its form. Orig. art. has: 6 formulas, 4 figures and 1 table.

ASSOCIATION: Moskovskiy institut inzhenerov geodezii, aerofotos"yemki i kartografii (Moscow Institute of Geodetic, Aerial Mapping and Cartographic Engineers)

SUBMITTED: 25Nov64 ENCL: 00 SUB CODE: ES

NO REF SOV: 008 OTHER: 004

Card 3/3

APPROVED FOR RELEASE: 06/19/2000 CIA-RDP86-00513R000308720017-3"

"APPROVED FOR RELEASE: 06/19/2000 CIA-RDP86-00513R000308720017-3

NOVOMEYSKIY, Yu.D.; DAMMER, V.Kh.; CHESNOKOV, Yu.V.

Experimental replacement of nickel steel in parts made of nonmagnetic steels. Biul. tekh.-ekon. inform. Gos. nauch.-issl. inst. nauch. i tekh. inform. 18 no.2:17-18 F '65. (MIRA 18:5)

APPROVED FOR RELEASE: 06/19/2000 CIA-RDP86-00513R000308720017-3"

"APPROVED FOR RELEASE: 06/19/2000 CIA-RDP86-00513R000308720017-3

DAMMER, V.Kh.; CHESNOKOV, Yu.V.; NOVOMEYSKIY, Yu.D.

Vacuum oven. Mashinostroitel' no.7:21 Jl '65. (MIRA 18:7)

APPROVED FOR RELEASE: 06/19/2000 CIA-RDP86-00513R000308720017-3"

"APPROVED FOR RELEASE: 06/19/2000 CIA-RDP86-00513R000308720017-3

CHESNOKOVA, A.P.

Dynamics of the higher nervous function in puppies during their indivual development. Zh. vysshei nerv. deiat. Pavlova 1 no.4:555-565 July-Aug 1951. (CIML 23:2)

1. Department of Normal Physiology, Gor'kiy Medical Institute.

APPROVED FOR RELEASE: 06/19/2000 CIA-RDP86-00513R000308720017-3"

"APPROVED FOR RELEASE: 06/19/2000 CIA-RDP86-00513R000308720017-3

CHESNOKOVA, A.P.

Reduction of dynamic stereotypy in dogs in various ages as one of the indicators of age factor in the nature of the higher nervous function. Zh. vysshei nerv. deiat. 2 no. 3:373-380 May-June 1952. (CLML 23:3)

1. Department of Normal Physiology of Gor'kiy Medical Institute.

APPROVED FOR RELEASE: 06/19/2000 CIA-RDP86-00513R000308720017-3"

"APPROVED FOR RELEASE: 06/19/2000 CIA-RDP86-00513R000308720017-3

CHESNOKOVA, A. P.

"The Aftereffects of A Single Irradiation Immediately After Birth."

report presented at the Conference on Influence of Ionizing Radiation upon the Higher Developed Parts of the Central Nerve System, Inst. of Higher Nervous Activity, AS USSR, 8-10 May 1958.

APPROVED FOR RELEASE: 06/19/2000 CIA-RDP86-00513R000308720017-3"

"APPROVED FOR RELEASE: 06/19/2000 CIA-RDP86-00513R000308720017-3

CHESNOKOVA, A.P.

Studies on the neural mechanisms of disorders of the higher nervous activity in white rats following a single ionizing irradiation during the early stages of development. Med. rad. 4 no.4:16-21 Ap '59. (MIRA 12:7)

1. Iz laboratorii eksperimental'noy patofiziologii i terapii vysshey nervnoy deyatel'nosti zhivotnykh Instituta vysshey nervnoy deyatel'nosti AN SSSR.

(CENTRAL NERVOUS SYSTEM, physiol.
higher nerv. activity disord. after single dose irradiation of rats (Rus))
(RADIATION, effects,
same)

APPROVED FOR RELEASE: 06/19/2000 CIA-RDP86-00513R000308720017-3"

"APPROVED FOR RELEASE: 06/19/2000 CIA-RDP86-00513R000308720017-3

CHESNOKOVA, A.P.

Some peculiarities in the activity of the cerebral cortex of white rats in ontogenesis. Trudy Inst. vys. nerv. deiat. Ser. patofiziol. no.9:24-29 '61. (MIRA 15:4)
(CONDITIONED RESPONSE)

APPROVED FOR RELEASE: 06/19/2000 CIA-RDP86-00513R000308720017-3"

"APPROVED FOR RELEASE: 06/19/2000 CIA-RDP86-00513R000308720017-3

CHESNOKOVA, A.P.

Dynamics of changes in the activity of the higher sections of the central nervous system of white rats irradiated in the early stages of postnatal development. Trudy Inst. vys. nerv. deiat. Ser. patofiziol. no.9:198-205 '61. (MIRA 15:4)
(GAMMA RAYS--PHYSIOLOGICAL EFFECT) (CONDITIONED RESPONSE)

APPROVED FOR RELEASE: 06/19/2000 CIA-RDP86-00513R000308720017-3"

"APPROVED FOR RELEASE: 06/19/2000 CIA-RDP86-00513R000308720017-3

CHESNOKOVA, G.D.; IVANOVA, A.T.; ZOLOTOKRYLINA, Ye.S.; RYABOVA, N.M.; LEBEDEVA, L.V.

Resuscitation in surgery. Sovet. med. 17 no. 1:18-20 Jan 1953. (CLML 24:1)

1. Of Moscow Municipal Scientific-Research Institute of First Aid imeni Sklifosovskiy (Director -- B. A. Petrov) and of the Laboratory of Experimental Physiology for Revival of the Organism (Head -- Prof. V. A. Negovskiy) of the Academy of Medical Sciences, USSR.

APPROVED FOR RELEASE: 06/19/2000 CIA-RDP86-00513R000308720017-3"

"APPROVED FOR RELEASE: 06/19/2000 CIA-RDP86-00513R000308720017-3

CHESNOKOVA, G.D., kandidat meditsinskikh nauk; AGAYEV, B.A.

General and local anesthesia with hypothermia in some surgical operations. Khirurgiia 33 no.2:92-96 F '57. (MLRA 10:6)

1. Iz gospital'noy khirurgicheskoy kliniki (zav. - prof. A.V. Gulyayev) pediatricheskogo fakul'teta II Moskovskogo gosudarstvennogo meditsinskogo instituta imeni I.V.Stalina.
(HYPOTHERMIA
with anesth. in surg. (Rus))

APPROVED FOR RELEASE: 06/19/2000 CIA-RDP86-00513R000308720017-3"

"APPROVED FOR RELEASE: 06/19/2000 CIA-RDP86-00513R000308720017-3

EXCERPTA MEDICA Sec 9 Vol 13/8 Surgery August 59

4273. (1133) ARTIFICIAL HIBERNATION IN PROPHYLAXIS AND TREATMENT OF SURGICAL AND TRAUMATIC SHOCK (Russian text) - Chesnokova G.D. and Agaev B.A. - KHIRURGIYA 1958, 6 (59-66) ~~Graphs 1 Tables 1~~

Artificial hibernation was induced in patients by administration of neuroplegic drugs (chlorpromazine, promethazine, etizin, fenethazine, promedol, procaine). This method was used in 52 patients for prophylaxis of surgical shock and in 12 for treatment of developing traumatic shock. Artificial hibernation is helpful in the prevention of surgical shock in major surgery. Blood transfusion followed by induction of hibernation gives a positive therapeutic effect in the treatment of traumatic shock of the II and III degrees.

A. Cand. Med. Sci.

Iz gospital'noy khirurgicheskoy kliniki (zav. prof. A. V. Gulyay
II Moskovskogo gosudarstvennogo meditsinskogo instituta
imeni N. I. Pirogova i laboratorii eksperimental'noy fiziologii
po ozhivleniyu organizma (zav. prof. V. A. Negovskiy) AMN SSSR

APPROVED FOR RELEASE: 06/19/2000 CIA-RDP86-00513R000308720017-3"

"APPROVED FOR RELEASE: 06/19/2000 CIA-RDP86-00513R000308720017-3

AGAYEV, B.A., CHESNOKOVA, G.D.

Changes in total gas exchange and basal metabolism during artificial (pharmacological) hibernation. Azerb.med.zhur. no.6:65-70 Je '58 (MIRA 11:7)

1. Iz kliniki gospital'noy khirurgii pediatricheskogo fakul'teta (zav. - prof. A.V. Gulyayev) 2-go Moskovskogo gosudarstvennogo meditsinskogo instituta im. N.I. Pirogova.
(RESPIRATION)
(METABOLISM)

APPROVED FOR RELEASE: 06/19/2000 CIA-RDP86-00513R000308720017-3"

"APPROVED FOR RELEASE: 06/19/2000 CIA-RDP86-00513R000308720017-3

CHESNOKOVA, G.D., ~~kand.~~med.nauk (Moskva)

First All-Russian Congress of Surgeons, anesthesiology section, Leningrad, December 18, 1958. Khirurgiia 35 no.6:148-150 Je '59. (MIRA 12:8)

(ANESTHESIOLOGY)

APPROVED FOR RELEASE: 06/19/2000 CIA-RDP86-00513R000308720017-3"

"APPROVED FOR RELEASE: 06/19/2000 CIA-RDP86-00513R000308720017-3

POKUTSA, Ya.G.; CHESNOKOVA, K.Ya.; MARKOVA, S.M., red.; KAYDALOVA, M.D., tekhn.red.

[For high corn yields] Za vysokii urozhai kukuruzy. Khabarovsk, Khabarovskoe knizhnoe izd-vo, 1960. 22 p. (MIRA 14:2)

1. Glavnyy agronom Birobidzhanskogo sovkhoza (for Pokutsa).
2. Chlen Obshchestva po rasprostraneniyu politicheskikh i nauchnykh znaniy (for Chesnokova).
(Corn (Maize))

APPROVED FOR RELEASE: 06/19/2000 CIA-RDP86-00513R000308720017-3"

"APPROVED FOR RELEASE: 06/19/2000 CIA-RDP86-00513R000308720017-3

ZIKEYEV, T.A., kand.tekhn.nauk; KAZAKOVA, M.D., inzh.; CHESNOKOVA, L.I., inzh.

Effect of natural moisture of Moscow Basin coal on its friability. Teploenergetika 7 no.10:43-46 O '60. (MIRA 14:9)

1. Vsesoyuznyy teplotekhnicheskiy institut.
(Moscow Basin--Coal--Testing)

APPROVED FOR RELEASE: 06/19/2000 CIA-RDP86-00513R000308720017-3"

"APPROVED FOR RELEASE: 06/19/2000 CIA-RDP86-00513R000308720017-3

BOL'SHAKOV, N.; CHESNOKOVA, M.

The way to increase accumulations. Fin. SSSR 23 no.8:28-31 Ag '62. (MIRA 15:8)

(Local finance) (Factory management)

APPROVED FOR RELEASE: 06/19/2000 CIA-RDP86-00513R000308720017-3"

"APPROVED FOR RELEASE: 06/19/2000 CIA-RDP86-00513R000308720017-3

CHESNOKOVA, Mariya Spiridonovna, svinarka; KHUDYAKOV, G.V., red.; TSYUHKO, M.I., tekhn.red.

[I'll fatten two thousand swine in a year] Otkormliu za god dve tysiachi svinei. Orenburg, Orenburgskoe knizhnoe izd-vo, 1960. 10 p. (MIRA 14:2)

1. Sovkhoz "Krasnogvardeyets," Buzulukskogo rayona (for Chesnokova).
(Swine--Feeding and feeds)

APPROVED FOR RELEASE: 06/19/2000 CIA-RDP86-00513R000308720017-3"

"APPROVED FOR RELEASE: 06/19/2000 CIA-RDP86-00513R000308720017-3

FIRSANOV, Nikolay Nikolayevich; SIGAYEV, A.F.; GONCHUKOV, V.S.; CHESNOKOVA, N.G., inzh., retsenzent; ZUBCHENKO, V.V., inzh., red.; USENKO, L.A., tekhn. red.

[Lighting of railroad stations] Osveshchenie zheleznodorozhnykh stantsii. Moskva, Transzheldorizdat, 1963. 185 p. (MIRA 16:5)

(Railroads--Stations) (Railroads--Electric equipment)

APPROVED FOR RELEASE: 06/19/2000 CIA-RDP86-00513R000308720017-3"

"APPROVED FOR RELEASE: 06/19/2000 CIA-RDP86-00513R000308720017-3

CHESNOKOVA, N.G.; FILIPPOVA, L.S., red.; KHITROVA, N.A., tekhn. red.

[Electric lighting of repair shops and industrial enterprises on railroads] Elektricheskoe osveshchenie depo i promyshlennykh predpriiatii zheleznodorozhnogo transporta. Moskva, Vses. izdatel'sko-poligr. ob"edinenie M-va putei soobshcheniia, 1961. 29 p. (MIRA 14:6)

(Railroads—Lighting)

APPROVED FOR RELEASE: 06/19/2000 CIA-RDP86-00513R000308720017-3"

"APPROVED FOR RELEASE: 06/19/2000 CIA-RDP86-00513R000308720017-3

L 3204-66 EWT(m)/EPF(c)/EWP(j)/T RM

ACCESSION NR: AP5016306 UR/0190/64/006/012/2202/2202

AUTHOR: Babitskiy, B. D.; Dogopolsk, B. A.; Korner, V. A.; Lobach, M. I.; Tinyakova, Ye. I.; Chesnokova, N. N.; Yakovlev, V. A.

TITLE: Stereospecific polymerization of butadiene in the presence of pi-allylic complexes

SOURCE: Vysokomolekulyarnyye soyedineniya, v. 6, no. 12, 1964, 2202

TOPIC TAGS: polymerization, butadiene, catalysis, macromolecular chemistry

Abstract: It was shown that the polymerization of butadiene in benzene solutions under the influence of catalytic systems based on pi-allylic complexes of nickel and metal halides ($TiCl_4$, VCl_4, WCl_6, $AlBr_3$, and $NiCl_2$) leads to the formation of a polymer with predominantly (up to 94%) cis-1,4-units. The stereospecificity of these catalysts does not depend on the nature of the metal in the Lewis acid. The polymerization temperature was 30-80° and the time 8-18 hours.

ASSOCIATION: none

SUBMITTED: 13Jul64 ENCL: 00 SUB CODE: OC, GC

NO REF SOV: 000 OTHER: 000 JPRS

Card 1/1

APPROVED FOR RELEASE: 06/19/2000 CIA-RDP86-00513R000308720017-3"

"APPROVED FOR RELEASE: 06/19/2000 CIA-RDP86-00513R000308720017-3

BRESLER, S.Ye.; MOSEVITSKIY, M.I.; PODDUBNYY, I.Ye.; CHESNOKOVA, N.N.

Study of the mechanism of polymerization of isoprene by a complex catalyst on the basis of molecular weight distributions of polymers. Zhur. tekh. fiz. 28 no.11:2487-2492 N '58.

(MIRA 12:1)

(Isoprene) (Polymerization)

APPROVED FOR RELEASE: 06/19/2000 CIA-RDP86-00513R000308720017-3"

"APPROVED FOR RELEASE: 06/19/2000 CIA-RDP86-00513R000308720017-3

KOROTKOV, A.A.; CHESNOKOVA, N.N.; TRUKHMANOVA, L.B.

Catalytic polymerization of isoprene with butyllithium. Vysokom. soed. 1 no.1:46-57 Ja '59. (MIRA 12:9)

1. Vsesoyuznyy nauchno-issledovatel'skiy institut sinteticheskogo kauchuka i Institut vysokomolekulyarnykh soyedineniy AN SSSR.
(Isoprene) (Lithium)

APPROVED FOR RELEASE: 06/19/2000 CIA-RDP86-00513R000308720017-3"

"APPROVED FOR RELEASE: 06/19/2000 CIA-RDP86-00513R000308720017-3

KOROTKOV, A.A.; CHESHOKOVA, N.N.

Catalytic copolymerization of styrene and bivinyl. Vysokom. soed. 2 no. 3:365-376 Mr '60. (MIRA 13:11)

1. Vsesoyuznyy nauchno-issledovatel'skiy institut sinteticheskogo kauchuka im.S.V.Lebedeva.
(Styrene) (Butadiene) (Polymerization)

APPROVED FOR RELEASE: 06/19/2000 CIA-RDP86-00513R000308720017-3"

"APPROVED FOR RELEASE: 06/19/2000 CIA-RDP86-00513R000308720017-3

L 60199-65 EWT(m)/EPF(c)/EWG(m)/EWP(j)/T Pc-4/Pr-4 DS/WW/GS/JAJ/RM

ACCESSION NR: AT5019602 UR/0000/64/000/000/0014/0040

33
24

AUTHOR: Korotkov, A. A.; Chesnokova, N. N.; Krupyshev, M. A.

TITLE: Mechanism and kinetics of catalytic polymerization of isoprene

SOURCE: Vsesoyuznyy nauchno-issledovatel'skiy institut sinteticheskogo kauchuka. Polimerizatsiya izoprena kompleksnymi katalizatorami (Polymerization of isoprene by complex catalysts). Moscow, Izd-vo Khimiya, 1964, 14-40

TOPIC TAGS: isoprene polymerization, kinetics, mechanism, catalyst, catalysis

ABSTRACT: Effect of temperature and concentrations of monomer and catalyst on kinetics of isoprene polymerization in isopentane and on polymer molecular weight and microstructure was studied at 10°, 20°, and 30°C. $TiCl_4$ activated with $(iso\text{-}C_4H_9)_2AlCl$ served as catalyst. Experiments were also conducted without a solvent and in benzene solution. The initial rate of polymerization W (up to 25% conversion) is described by the equation:

$$W \approx \frac{a \cdot k_1 \cdot k_2 \cdot m_0^2}{k_3}\left(n_0 - \frac{1}{K}\right)$$

where: a is a proportionality coefficient, k_1, k_2, and k_3 are rate constants of

Card 1/3

APPROVED FOR RELEASE: 06/19/2000 CIA-RDP86-00513R000308720017-3"