"APPROVED FOR RELEASE: 06/12/2000 CIA-RDP86-00513R000308920001-8

1. CHIZHIK, P.

2. USSR (600)

4. Baking

7. Alteration in design of electric grills for baking wafers. Khol. tekh. 29 no. 3, 1952

9. Monthly List of Russian Accessions, Library of Congress, January 1953. Unclassified.

APPROVED FOR RELEASE: 06/12/2000 CIA-RDP86-00513R000308920001-8"

"APPROVED FOR RELEASE: 06/12/2000 CIA-RDP86-00513R000308920001-8

24.7900 (1055,1144,1147)
5.5450

30863
S/054/61/000/004/004/009
B108/B138

AUTHOR: Chizhik, V. I.

TITLE: Spin-echo device

PERIODICAL: Leningrad. Universitet. Vestnik. Seriya fiziki i khimii, no. 4, 1961, 64 - 68

TEXT: Spin-echo observation is one method of studying nuclear magnetic resonance. It permits measurement of longitudinal and transverse relaxation times, T_1 and T_2, the study of diffusion in liquids and also the achievement of a high resolution, etc. In this paper the author describes a device for spin-echo observation the idea for part of which he adopted from other publications (Refs. 11, 12, see below). A block diagram is shown in Fig. 1 featuring the two timing-pulse generators, No. 1 and No. 2, as well as the transmitter unit No. 3. The electronics of No. 1 and No. 2 are shown in Fig. 2a and b, respectively. No. 1 is used to measure T_2, and No. 2 to measure T_1. This device was used for measurements with

Card 1/5

APPROVED FOR RELEASE: 06/12/2000 CIA-RDP86-00513R000308920001-8"

"APPROVED FOR RELEASE: 06/12/2000 CIA-RDP86-00513R000308920001-8

30863
S/054/61/000/004/004/009
B108/B138

Spin-echo device

hydrogen nuclei in a magnetic field of 3750 gauss ($\nu_o \approx 15.75$ Mcps). The signal-to-noise ratio was 150 - 200. For water, $T_2 = 2.2$ sec, for $PO(OCH_3)_3$ $T_2 = 1.3$ sec. These values are consistent with those obtained by other methods. The author thanks Assistant A. A. Morozov for supervision, and Docent F. I. Skripov for discussion. Mention is made of N. M. Pomerantsev (UFN, 65, vyp. 1, 87, 1958) and of V. I. Yermakov and V. M. Platonov (PTE, 3, 110, 1961). There are 3 figures and 13 references: 2 Soviet and 11 non-Soviet. The three most recent references to English-language publications read as follows: S. Meiboom, D. Gill. Rev. Sci. Instr., 29, 688, 1958; Ref. 11: B. M. Banerjee et al. Indian J. Phys., 31, 211, 1957; Ref. 12: J. C. Buchta et al. Rev. Sci. Instr., 29, 55, 1958.

Legend to Fig. 1: (1) 90°-pulse; (2) master oscillator; (3) chopper; (4) 180°-pulse multivibrator; (5) generator; (6) first mixer; (7) second mixer; (8) 180°-pulse; (9) mixer; (10) phase shifter; (11) generator; (12) amplifier; (13) power amplifier; (14) junction head; (15) receiver; (16) ЭНО-1 (ENO-1) oscilloscope.

Card 2/5

APPROVED FOR RELEASE: 06/12/2000 CIA-RDP86-00513R000308920001-8"

"APPROVED FOR RELEASE: 06/12/2000 CIA-RDP86-00513R000308920001-8

S/054/61/000/004/004/009
B108/B138

Spin-echo device

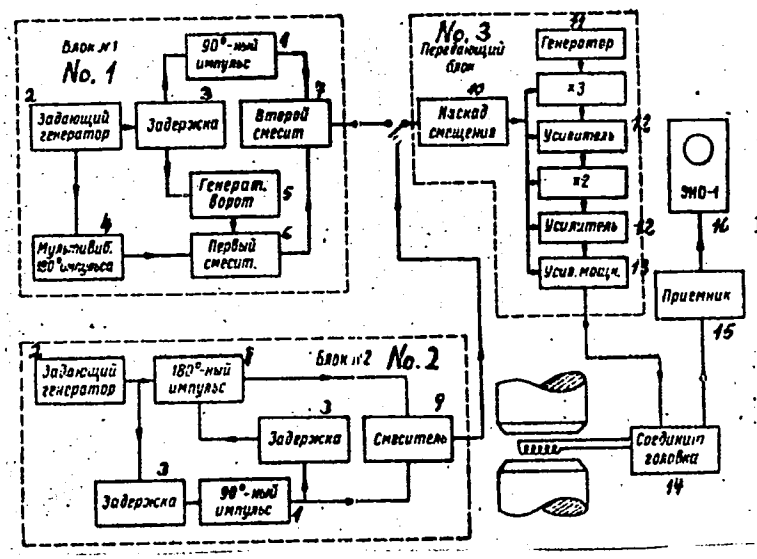

Fig. 1

Card 3/5

APPROVED FOR RELEASE: 06/12/2000 CIA-RDP86-00513R000308920001-8"

"APPROVED FOR RELEASE: 06/12/2000 CIA-RDP86-00513R000308920001-8

30963

S/054/61/000/004/004/009
B108/B138

Spin-echo device

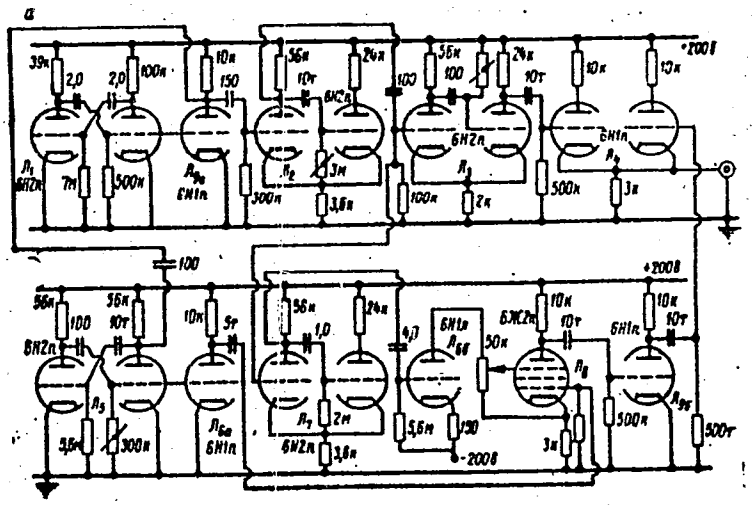

Card 4/5

APPROVED FOR RELEASE: 06/12/2000 CIA-RDP86-00513R000308920001-8"

"APPROVED FOR RELEASE: 06/12/2000 CIA-RDP86-00513R000308920001-8

30863

Spin-echo device

S/054/61/000/004/004/009
B108/B138

6

Fig. 2

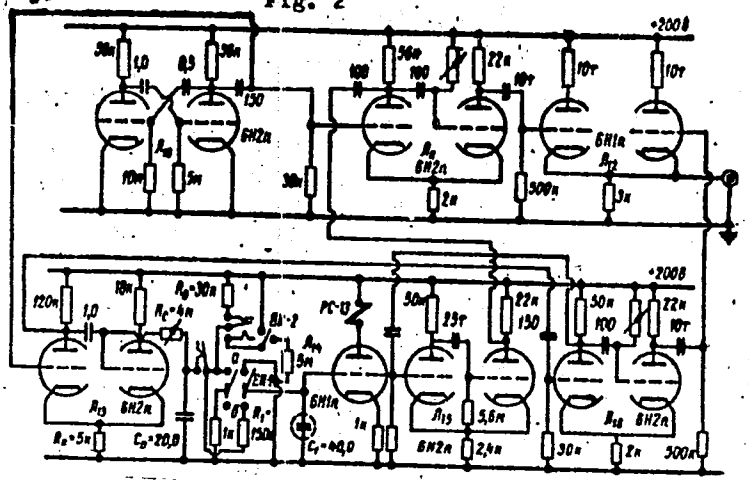

Card 5/5

APPROVED FOR RELEASE: 06/12/2000 CIA-RDP86-00513R000308920001-8"

"APPROVED FOR RELEASE: 06/12/2000 CIA-RDP86-00513R000308920001-8

CHIZHIK, V.I.

Setup for spin-echo observations. Vest LGU 16 no.22:64-68 '61.
(MIRA 14:11)
(Nuclear magnetic resonance and relaxation)

APPROVED FOR RELEASE: 06/12/2000 CIA-RDP86-00513R000308920001-8"

"APPROVED FOR RELEASE: 06/12/2000 CIA-RDP86-00513R000308920001-8

CHERNYSHEV, Yu.S.; CHIZHIK, V.I.

Conditions for measuring the transverse nuclear magnetic relaxation time. Vest. LGU 19 no.22:79-82 '64 (MIRA 18:1)

APPROVED FOR RELEASE: 06/12/2000 CIA-RDP86-00513R000308920001-8"

"APPROVED FOR RELEASE: 06/12/2000 CIA-RDP86-00513R000308920001-8

ACC NR: AP6028189 SOURCE CODE: UR/0032/66/032/006/0683/0686

AUTHOR: Chizhik, V. I.; Ryl'kov, V. V.

ORG: Scientific Research Physics Institute, Leningrad State University (Nauchno-issledovatel'skiy fizicheskiy institut Leningradskogo gosudarstvennogo universiteta)

TITLE: Method for determining resolution in nuclear resonance spectra

SOURCE: Zavodskaya laboratoriya, v. 32, no. 6, 1966, 683-686

TOPIC TAGS: spectrum analysis, nuclear resonance, nuclear spin

ABSTRACT: The article describes a method for determining the displacement frequency between two lines of the nuclear magnetic resonance spectrum. The method is based on separation of the frequencies of the beats from signals of the spin echo. One of the most important characteristics of nuclear resonance spectra is the position of the spectral lines corresponding to nuclei belonging to different molecules or chemical groups. In some cases, the position of the lines depends on the concentration of the component under study. By studying the spectra of the magnetic resonance it is possible to determine the relative concentration of the component and, consequently, to control industrial processes by this method. The article gives a very detailed electric diagram of the circuit used for measurement of the frequency of the beats in the bending of the signal of the spin echo. The method is stated to have the following

Card 1/2

UDC: 539.121.64

APPROVED FOR RELEASE: 06/12/2000 CIA-RDP86-00513R000308920001-8"

"APPROVED FOR RELEASE: 06/12/2000 CIA-RDP86-00513R000308920001-8

ACC NR: AP6028189

limitations: 1) it is difficult or impossible to obtain information for spectra consisting of more than two lines; 2) the pulse method for observation of nuclear resonance is somewhat inferior in sensitivity to the stationary method; this reduces the accuracy of the measurements in the case of weak spectral lines. Orig. art. has: 3 figures and 1 table.

SUB CODE: 20/ SUBM DATE: none/ ORIG REF: 002/ OTH REF: 001

Card 2/2

APPROVED FOR RELEASE: 06/12/2000 CIA-RDP86-00513R000308920001-8"

"APPROVED FOR RELEASE: 06/12/2000 CIA-RDP86-00513R000308920001-8

L 21200-66 EWT(1)/EWT(m)/EWC(f)/EPF(n)-2/EWG(m)/T/EWP(t)/EWP(k)/EWP(1) IJP(c)
ACC NR: AT6004608 (N) SOURCE CODE: UR/0000/65/000/000/0096/0099
DS/WG/JD/GS

AUTHOR: Chizhik, V. I.; Khripun, M. K.

ORG: none

TITLE: Nuclear magnetic relaxation in diamagnetic electrolyte solutions

SOURCE: Leningrad. Universitet. Yadernyy magnitnyy rezonans (Nuclear magnetic resonance). no. 1, 1965, 96-99

TOPIC TAGS: spin lattice relaxation, electrolyte, diamagnetism, nuclear magnetic resonance

ABSTRACT: The authors study the effect of dissolved electrolytes on the intensity of spin-lattice relaxation in water. The relaxation time was measured by the pulse method using a sequence of 180-90-180° rf pulses. The measurement error was 2%. Specimens with solutions of $HClO_4$, HNO_3, HCl, as well as with solutions of calcium and cadmium salts in these acids were sealed in small vials. Curves are given showing the spin-lattice relaxation time for water protons as a function of electrolyte concentration for the various acids and salts studied. Experiments on hydra-

Card 1/2

APPROVED FOR RELEASE: 06/12/2000 CIA-RDP86-00513R000308920001-8"

"APPROVED FOR RELEASE: 06/12/2000 CIA-RDP86-00513R000308920001-8

L 21200-66
ACC NR: AT6004608

tion of chlorine, nitrate and perchlorate anions showed the following series for mobility of water molecules: $ClO_4 > NO_3 > Cl$. Bivalent calcium and cadmium cations have a strong structuring effect on the water molecules surrounding them and should form large and extremely stable hydrate shells. It was found that the hydrogen ions in HCl solutions contribute less to the relaxation time than in $HClO_4$ and HNO_3 solutions. This indicates that hydrochloric acid undergoes incomplete dissociation even in small concentrations. Orig. art. has: 2 figures.

SUB CODE: 20,07/ SUBM DATE: 03Nov65/ ORIG REF: 000/ OTH REF: 004

Card 2/2

APPROVED FOR RELEASE: 06/12/2000 CIA-RDP86-00513R000308920001-8"

"APPROVED FOR RELEASE: 06/12/2000 CIA-RDP86-00513R000308920001-8

L 21201-66 EWT(1)/ETC(m)-6 IJP(c) WW/GS
ACC NR: AT6004611 SOURCE CODE: UR/0000/65/000/000/0123/0131

AUTHOR: Chizhik, V. I.

ORG: none

35
B+1

TITLE: Using the spin echo method for measuring times of spin-lattice T_1 and spin-spin T_2 relaxation

SOURCE: Leningrad. Universitet. Yadernyy magnitnyy rezonans (Nuclear magnetic resonance). no. 1, 1965, 123-131

TOPIC TAGS: NMR spectroscopy, spin relaxation, spin lattice relaxation

ABSTRACT: The spin echo method is one of the best ways for measuring spin-spin and spin-lattice relaxation. The author describes a spin echo spectrometer which may be used for studying liquids containing hydrogen, fluorine and phosphorus nuclei and also discusses several specific problems involved in the design of this type of equipment. A block diagram of the spectrometer is given and the individual sections (noncoherent rf pulse oscillator, pickup, receiver and programming device) are described. The instrument may be used for measuring the relaxation times of H^1

Card 1/2

2

APPROVED FOR RELEASE: 06/12/2000 CIA-RDP86-00513R000308920001-8"

"APPROVED FOR RELEASE: 06/12/2000 CIA-RDP86-00513R000308920001-8

L 21201-66
ACC NR: AT6004611

and F^{19} nuclei in the following ranges: T_1 from 5 μsec to 10 sec with an error of 2-5%, and from 10 sec to 100 sec with an error of 5-10%; T_2 from 100 μsec to 1 sec with an error of 5%, and from 1 sec to 2 sec with an error of 5-10%. Measurements of proton resonance in 0.05 cm^3 of water using a receiver with a passband of 10 kc show a signal to noise ratio of 40. Orig. art. has: 9 figures.

SUB CODE: 20/ SUBM DATE: 03Nov65/ ORIG REF: 001/ OTH REF: 004

Card 2/2 dda

APPROVED FOR RELEASE: 06/12/2000 CIA-RDP86-00513R000308920001-8"

"APPROVED FOR RELEASE: 06/12/2000 CIA-RDP86-00513R000308920001-8

L 21827-66

ACC NR: AT6004614 (N) SOURCE CODE: UR/0000/65/000/000/0144/0163

AUTHOR: Borodin, P. M.; Sventitskiy, Ye. N.; Chizhik, V. I.

ORG: none

66
65
B+1

TITLE: Investigation of toroidal units for measuring the flow velocity and discharge rate of a liquid on the basis of free precession of nuclei in the magnetic field of the earth

SOURCE: Leningrad. Universitet. Yadernyy magnitnyy rezonans (Nuclear magnetic resonance). no. 1, 1965, 144-163

TOPIC TAGS: flow measurement, flow meter, nuclear magnetic resonance, earth magnetic field

ABSTRACT: The authors consider the design of toroidal units for using free precession of nuclei in the magnetic field of the earth to measure the discharge rate of a liquid. Optimum dimensions are found for such a gauge with given rate of flow v, and relaxation times T_1 and T_2. The Packard-Varian method (M. Packard, R. Varian, *Phys. rev.*, 93, 941, 1954) may be used for measuring the flow velocity and discharge rate of a liquid using free precession of nuclei in the magnetic field of the earth in the simplest case. This method gives discrete readings in time inter-

2

Card 1/3

APPROVED FOR RELEASE: 06/12/2000 CIA-RDP86-00513R000308920001-8"

"APPROVED FOR RELEASE: 06/12/2000 CIA-RDP86-00513R000308920001-8

L 21827-66

ACC NR: AT6004614

0

vals of 1-4 seconds. When continuous measurement is necessary, two of these measurement systems may be used with opposed connection of the operating cycles ("magnetization-observation") or any nuclear resonance generator of the Skripov type (F. I. Skripov, *DAN SSSR*, 121, No 6, 998, 1958). The method described in this paper may be used for measuring the flow velocity of liquids which contain hydrogen, fluorine, and various other elements which give a strong nuclear magnetic resonance signal. This noncontact resonance measuring method is advantageous for measuring the discharge rate of aggressive liquids. The primary measuring element is a simple device which has low hydraulic resistance and the secondary instrument may be separated from the pickup unit by distances of more than 100 meters. Since the magnetic field of the earth is highly uniform, nuclear precession may be observed in large volumes, i. e. measurements of large liquid discharges are possible at low flow velocities through the pickup. The authors use units with a cross section of up to 36 cm^2. The proposed method may be used for measuring the discharge of a liquid flowing in any direction through the pickup. When the flow is reversed, the sign of the reading on the instrument is changed. Flow velocities down to approximately 1 cm/ /sec may be measured with no theoretical upper limit. The measurement error in the experiments conducted in this paper was ±(1.5-2) degrees. A change in the physical and chemical properties of the liquid (temperature, viscosity, transparency, elec-

Card 2/3

APPROVED FOR RELEASE: 06/12/2000 CIA-RDP86-00513R000308920001-8"

"APPROVED FOR RELEASE: 06/12/2000 CIA-RDP86-00513R000308920001-8

L 21827-66

ACC NR: AT6004614

trical conductivity, chemical composition, aggressiveness, etc.) has no effect on measurement results. Natural changes in the magnetic field of the earth and instability in the power supplies for the electric circuits have practically no effect on the results of measurements. The authors are sincerely grateful to Senior Engineer A. V. Mel'nikov for helping with the measurements and discussing various problems in the experimental work. Orig. art. has: 12 figures, 1 table, 9 formulas.

SUB CODE: 20/ SUBM DATE: 03Nov65/ ORIG REF: 003/ OTH REF: 001

Card 3/3

APPROVED FOR RELEASE: 06/12/2000 CIA-RDP86-00513R000308920001-8"

"APPROVED FOR RELEASE: 06/12/2000 CIA-RDP86-00513R000308920001-8

ACCESSION NR: AT 4014050 S/3073/63/000/000/0204/0224

AUTHOR: Kudryavtsev, I. V.; Chizhik, V. N.

TITLE: Increasing the fatigue strength of threaded machine parts

SOURCE: Prochnost' metallov pri peremenny*kh nagruzkakh; materialy* tret'yego soveschaniya po ustalosti metallov, 1962 g. Moscow, Izd-vo AN SSSR, 1963, 204-224

TOPIC TAGS: fatigue strength, metal fatigue, metal thread, cold rolling, metal stress, metal strength, cut thread, thread rolling, stress concentrator

ABSTRACT: Stress concentrations caused by threading considerably decrease the fatigue strength of cyclically loaded machine parts. The common method of cutting thread leads to an interruption of grain flow in rolled and forged materials, which adversely affects the strength of details at the location of the thread. The formation of threads by cold-rolling considerably reduces the unfavorable effect of stress concentrations which result in plastic deformation of a metal surface layer in which residual compressive stresses are produced. The original grain flow is not cut but is deformed to follow the profile of the thread. The technological process of thread-rolling insures higher production and is widely applied in mass production of small screws, bolts, and other parts externally threaded.

APPROVED FOR RELEASE: 06/12/2000 CIA-RDP86-00513R000308920001-8"

"APPROVED FOR RELEASE: 06/12/2000 CIA-RDP86-00513R000308920001-8

ACCESSION NR: AT 4014050

However, thread-rolling is practicable only on details of relatively small diameter, up to 40-50 mm, because higher pressure is required on the rollers with details of larger diameters. Rolling devices are also more complex. Experimental investigations have been performed and described in the past, showing that special finishing operations can be applied at the bottom of larger cut threads to increase the fatigue strength of details. New investigations made in this field by TsNIITMASh are described by the authors. New methods have been applied to produce plastic deformation of metal surface, such as the use of vibrating rollers for surface-rolling with the simultaneous application of a vibrational impact load to produce a peening effect to a great depth (see Figs. 1 and 2 of the Enclosure). These new devices are universal and can be applied to details of any size as attachments on the lathe. Fatigue tests have been conducted by pulsating tension and by bending small and large specimens having threads of the buttress, metric, and trapezoidal type. These tests have shown that strengthening of the thread bottom by plastic deformation increases the carrying capacity of threaded details 1-1/2 - 2 times and more. This effect has been observed on both small and large details (shafts up to 215 mm in diameter), on different types of steel, and with different types of cyclic loading. The influence of non-uniform distribution of loading along the threaded portion of bolts under a nut on the fatigue strength

APPROVED FOR RELEASE: 06/12/2000 CIA-RDP86-00513R000308920001-8"

"APPROVED FOR RELEASE: 06/12/2000 CIA-RDP86-00513R000308920001-8

ACCESSION NR: AT 4014[illegible]

by pulsating tension has been experimentally estimated. In contrast to bolts without surface treatment, such bolts which have been surface-rolled with vibrating roller at bottom of thread have not shown sensitivi[illegible] the above mentioned non-uniform distribution of loading along the bolt in the contact zo[illegible] [illegible]th the nut. The methods of strengthening treatment of threaded details by vibrating rollers have been established for practical purposes and corresponding recommendations have been issued to industrial plants where the recommendations have been applied to advantage. Orig. art. has: 15 figures and 6 tables.

ASSOCIATION: none

SUBMITTED: 00 DATE ACQ: 20Feb64 ENCL: 02 3

SUB CODE: MM NR REF SOV: 014 OTHER: 002

Card 3/6

APPROVED FOR RELEASE: 06/12/2000 CIA-RDP86-00513R000308920001-8"

"APPROVED FOR RELEASE: 06/12/2000 CIA-RDP86-00513R000308920001-8

ACCESSION NR: AT4014050

ENCLOSURE: 01

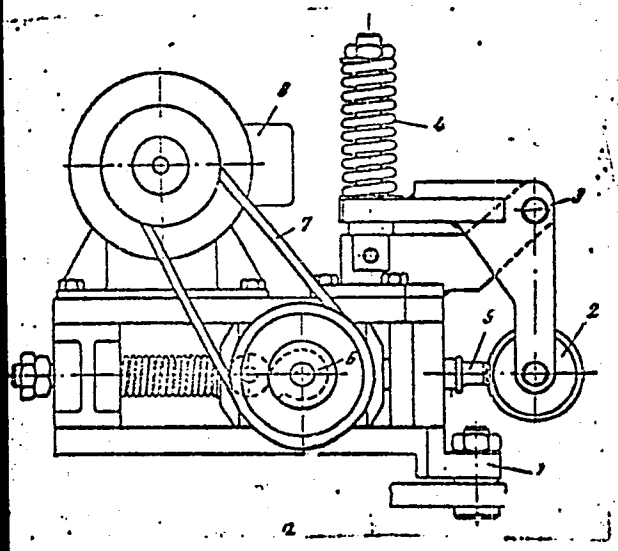

Fig. 1 -- Impact producing device UP-0.25 with vibrating roller

a. Schematic illustration

1 -connection of device to support of lathe

2 -roller for surface-rolling

3 -fulcrum pin of lever

4 -spring

5 -ram

6 -cam

Card 4/6

APPROVED FOR RELEASE: 06/12/2000 CIA-RDP86-00513R000308920001-8"

"APPROVED FOR RELEASE: 06/12/2000 CIA-RDP86-00513R000308920001-8

ACCESSION NR: AT4014050 ENCLOSURE: 02

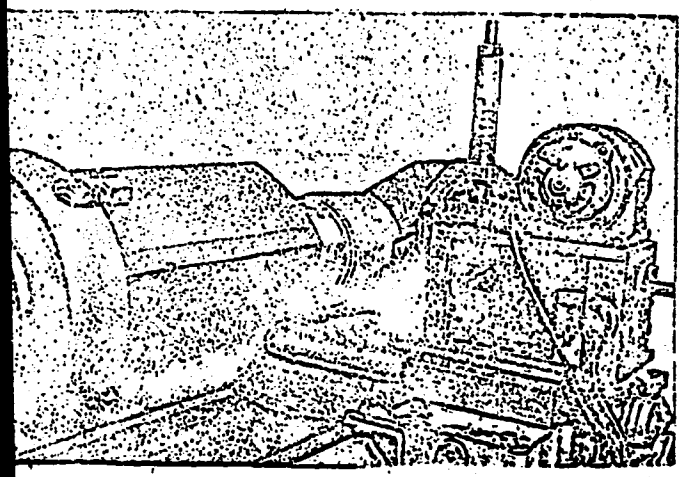

Fig. 1 - Impact producing device UP-0.25 with vibrating roller

b. General View

Card 5/6

APPROVED FOR RELEASE: 06/12/2000 CIA-RDP86-00513R000308920001-8"

"APPROVED FOR RELEASE: 06/12/2000 CIA-RDP86-00513R000308920001-8

ACCESSION NR: AT 4014050

ENCLOSURE 03

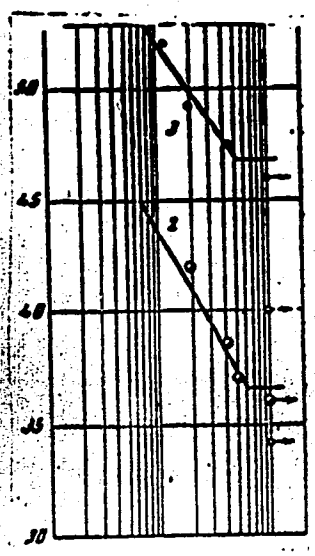

a. Microstructure of thread bottom (x100)

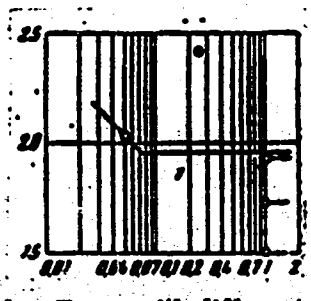

b. Zones with different hardness at thread bottom
1 - HB = 200 kg/mm^2
2 - HB = 190 to 200 kg/mm^2
3 - HB = 180 to 190 kg/mm^2
4 - HB = 170 to 180 kg/mm^2
5 - HB = 160 to 170 kg/mm^2

Basic metal - steel 35; 1.5 mm reduction on diameter

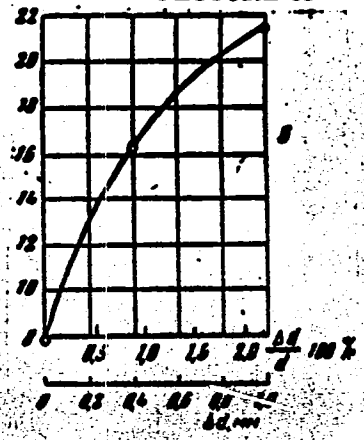

c. Idem.
1 - HB = 350 to 320 kg/mm^2
2 - HB = 280 kg/mm^2

Basic metal - steel 18 KhNVA; 1 mm reduction on diameter

Fig. 2. Microstructure and hardness of specimens with buttress thread UP78x12 after surface-rolling of thread bottom with vibrating roller

Card 6/6

APPROVED FOR RELEASE: 06/12/2000 CIA-RDP86-00513R000308920001-8"

"APPROVED FOR RELEASE: 06/12/2000 CIA-RDP86-00513R000308920001-8

S/122/63/000/001/009/012
D263/D308

AUTHORS: Kudryavtsev, I.V., Doctor of Technical Sciences, Professor and Chizhik, V.N., Engineer

TITLE: Amelioration of the fatigue resistance of threaded components

PERIODICAL: Vestnik mashinostroyeniya, no. 1, 1963, 51-55

TEXT: This work, which is registered with the Komitet po delam izobreteniy i otkrytiy pri Sovete Ministrov SSSR (Committee on Inventions and Discoveries of the Council of Ministers of the USSR) presents the results of the experiments on a new method of increasing the fatigue resistance of threaded components by cold working. The device, designed by I.V. Kudryavtsev and N.A. Lopatinskiy, basically consists of burnishing rollers which are pressed into the working surface by a constant load, and subjected to additional pulsating loads. The results of the experiments on fatigue resistance under alternating extension and bending of samples having diameters of 30 - 210 mm, with various types of threads, show that

Card 1/2

APPROVED FOR RELEASE: 06/12/2000 CIA-RDP86-00513R000308920001-8"

"APPROVED FOR RELEASE: 06/12/2000 CIA-RDP86-00513R000308920001-8

KUDRYAVTSEV, I. V.; CHIZHIK, V. N. (Moscow)

"Fatigue studies of marine thread joints."

report submitted for 2nd Conf, Dimensioning and Strength Calculations, Budapest, 5-10 Oct 1965.

APPROVED FOR RELEASE: 06/12/2000 CIA-RDP86-00513R000308920001-8"

"APPROVED FOR RELEASE: 06/12/2000 CIA-RDP86-00513R000308920001-8

CHIZHIKOV, A., inzh.

Effect of dying conditions on the cracking tendencies and strength of corn. Muk.-elev. prom. 26 no.9:15-16 S '60. (MIRA 13:9)

1. Vsesoyuznyy institut mekhanizatsii sel'skogo khozyaystva.
(Corn (Maize) - Drying)

APPROVED FOR RELEASE: 06/12/2000 CIA-RDP86-00513R000308920001-8"

"APPROVED FOR RELEASE: 06/12/2000 CIA-RDP86-00513R000308920001-8

L 6986-66 EPF(c)/EWT(m)/EWP(e)/EWP(b)/T/EWA(d)/EWP(v)/EWP(t) MJW/JD/WB

ACC NR: AP5022407 SOURCE CODE: UR/0369/65/000/004/0487/0493

63
57
B

AUTHOR: Kudryavtsev, I. V.; Chizhik, V. N.

ORG: TsNIITMASh, Moscow

TITLE: Investigation of endurance of threaded joints in sea water

SOURCE: Fiziko-khimicheskaya mekhanika materialov, no. 4, 1965, 487-493

TOPIC TAGS: corrosion resistance, endurance test, sea water corrosion, cold working

ABSTRACT: Effect of zinc plating and plastic deformation on corrosion resistance in sea water (3% NaCl solution) of the threaded joints of 40Kh-, 40KhNMA-, 18KhNVA-, and NN-3B steels was studied. The corrosion resistance of threaded joints (M30 × 3.5) subjected to alternating symmetric-cycle bending is given in fig. 1. The dependence of the endurance limits of steel threaded joints (M30 × 3.5) upon the degree of cold working (expressed as reduction in inner diameter of nut's hole in mm, Δd, or percent, Δd/d) is given in fig. 2. The endurance limits of joints (bolt - nut) of all four types of steel in sea water under alternating symmetric-cycle bending (10×10^6 cycles) varied within 12-14 kg/mm^2. The cold working of the

Card 1/4 0901 0132

APPROVED FOR RELEASE: 06/12/2000 CIA-RDP86-00513R000308920001-8"

"APPROVED FOR RELEASE: 06/12/2000 CIA-RDP86-00513R000308920001-8

L 6986-66

ACC NR: AP5022407

4

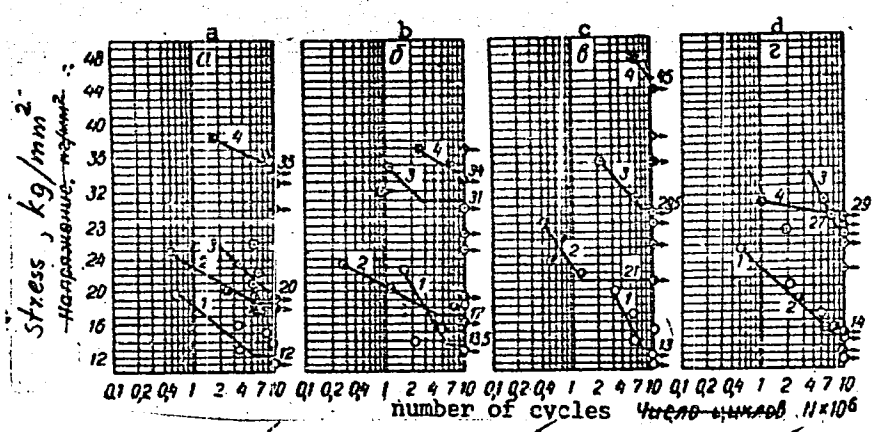

Fig. 1. a - 40Kh steel; b - 40KhNMA steel; c - 18KhNVA steel; d - NN-3B steel; 1 - thread cut with a knife; 2 - a zinc plated thread; 3 - a worked thread; 4 - a cold worked and zinc plated thread.

Card 2/4

APPROVED FOR RELEASE: 06/12/2000 CIA-RDP86-00513R000308920001-8"

"APPROVED FOR RELEASE: 06/12/2000 CIA-RDP86-00513R000308920001-8

L 6986-66

ACC NR: AP5022407

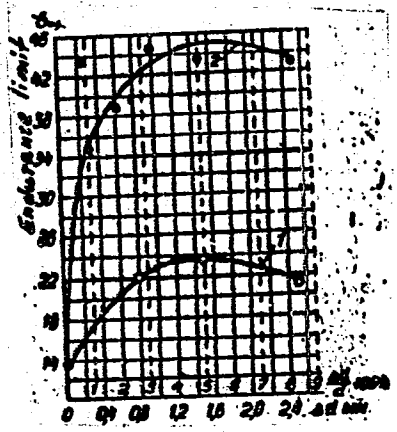

Fig. 2. 1 - standard 45 steel;
2 - the heat treated 45 steel.

Card 3/4

APPROVED FOR RELEASE: 06/12/2000 CIA-RDP86-00513R000308920001-8"

"APPROVED FOR RELEASE: 06/12/2000 CIA-RDP86-00513R000308920001-8

6986-66

ACC NR: AP5022407

2

threaded holes resulted always in a 67-130% increase in the endurance limits of joints in sea water. It was particularly effective in the case of 18KhNVA steel. The zinc plating increased the endurance limits of the 40Kh, 40KhNMA, and 18KhNVA steels but proved ineffective in the case of NN-3B stainless steel. In general, the cold working gave greater improvements than the zinc plating. A combination treatment, cold working of the nut holes and zinc plating of the bolts proved most effective; with all four types of steels, the endurance limits of the joints increased by 107-250% and both the salt concentration and the nature of corrosive medium did not have any effect on the wear resistance of the joint. Zinc plating of bolts made of NN-3B steel did not improve corrosion resistance. The zinc plating of the cold worked nuts having either cutting threads or ordinary threads did not have any effect on the endurance limits. Tests on 18KhNVA steel subjected to oscillating axial stretching confirmed high effectiveness of the cold surface working on the steel joint strength. Orig. art. has: 7 figures, 2 tables.

SUB CODE: MM/ SUBM DATE: 11Jan65/ ORIG REF: 001/ OTH REF: 000

Card 4/4 rdo

APPROVED FOR RELEASE: 06/12/2000 CIA-RDP86-00513R000308920001-8"

"APPROVED FOR RELEASE: 06/12/2000 CIA-RDP86-00513R000308920001-8

CHIZHIKOV, A.

Estimating the duration of the drying of seed corn. Muk.-elev. prom. 29 no.11:26-27 N '63. (MIRA 17:2)

1. Vsesoyuznyy institut mekhanizatsii sel'skogo khozyaystva.

APPROVED FOR RELEASE: 06/12/2000 CIA-RDP86-00513R000308920001-8"

"APPROVED FOR RELEASE: 06/12/2000 CIA-RDP86-00513R000308920001-8

CHIZHIKOV, A.D., veterinarnyy vrach.

Aluminum for quick dissolving of caustic soda. Veterinariia 34 no.4: 82 Ap '57. (MIRA 10:4)
(Aluminum) (Sodium Hydroxide)

APPROVED FOR RELEASE: 06/12/2000 CIA-RDP86-00513R000308920001-8"

"APPROVED FOR RELEASE: 06/12/2000 CIA-RDP86-00513R000308920001-8

CHIZHIKOV, A.D., veterinarnyy vrach.

Komarov's improved disinfection apparatus. Veterinariia 34 no.4: 82 Ap '57. (MLRA 10:4)

1. Mezhrayonnaya vetbaklaboratoriya, st. Manturovo, Kostromskoy oblasti.
(Disinfection and disinfectants)

APPROVED FOR RELEASE: 06/12/2000 CIA-RDP86-00513R000308920001-8"

"APPROVED FOR RELEASE: 06/12/2000 CIA-RDP86-00513R000308920001-8

CHIZHIKOV, A.G.; GORBUNOV, V.M.

The SZS-6 grain dryer operated with liquid fuel. Biul.tekh.-ekon. inform. no.10:70-72 '61. (MIRA 14:10)
(Grain--Drying)

APPROVED FOR RELEASE: 06/12/2000 CIA-RDP86-00513R000308920001-8"

"APPROVED FOR RELEASE: 06/12/2000 CIA-RDP86-00513R000308920001-8

OKUN', G.S.; CHIZHIKOV, A.G.

Aerating and stirring grain during drying. Mekh. i elek. sots. sel'khoz. 19 no.6:58-60 '61. (MIRA 14:12)
(Grain--Drying)

APPROVED FOR RELEASE: 06/12/2000 CIA-RDP86-00513R000308920001-8"

"APPROVED FOR RELEASE: 06/12/2000 CIA-RDP86-00513R000308920001-8

OKUN', G.S.; CHIZHIKOV, A.G.

Units for grain drying. Biul.tekh.-ekon.inform. no.2:92-96 '62. (MIRA 15:3)

(Grain--Drying)

APPROVED FOR RELEASE: 06/12/2000 CIA-RDP86-00513R000308920001-8"

"APPROVED FOR RELEASE: 06/12/2000 CIA-RDP86-00513R000308920001-8

OKUN', G.S.; PTITSYN, S.D.; CHIZHIKOV, A.G.; UL'RIKH, N.N., kand. sel'khoz. nauk, red.; SPICHKIN, I.M., red.; PEVZNER, V.I., tekhn. red.; KOPNINA, N.N., tekhn. red.

[Devices for drying grain abroad; a survey of the foreign literature] Ustanovka dlia sushki zerna za rubezhom; obzor zarubezhnoi literatury. Moskva, Sel'khozizdat, 1963. 254 p. (MIRA 17:1)

APPROVED FOR RELEASE: 06/12/2000 CIA-RDP86-00513R000308920001-8"

"APPROVED FOR RELEASE: 06/12/2000 CIA-RDP86-00513R000308920001-8

CHIZHIKOV, A.G., inzh.

Calculations for the equipment of cleaning and drying plants and stations. Mekh. i elek. sots. sel'khoz. 21 no.1:48-49 '63. (MIRA 16:7)

1. Vsesoyuznyy nauchno-issledovatel'skiy institut mekhanizatsii sel'skogo khozyaystva.
(Grain—Cleaning) (Grain—Drying)

APPROVED FOR RELEASE: 06/12/2000 CIA-RDP86-00513R000308920001-8"

"APPROVED FOR RELEASE: 06/12/2000 CIA-RDP86-00513R000308920001-8

CHIZHIKOV, A.G.

Using liquid fuel as thermal source for grain dryers. Sbor. rab. GOSNITI no.16:14-19 [61]. (MIRA 16:12)

APPROVED FOR RELEASE: 06/12/2000 CIA-RDP86-00513R000308920001-8"

"APPROVED FOR RELEASE: 06/12/2000 CIA-RDP86-00513R000308920001-8

AUTHORS: Chizhikov, A. I.; and Boyarshinov, V. K.

TITLE: Experiment in the Use of Tritium in the Study of the Behavior of Hydrogen in Metals (Opyt primeneniya tritiya dlya izucheniya povedeniya vodoroda v metallakh)

PERIODICAL: Zavodskaya Laboratoriya, 1957, Vol. 23, No. 1, pp. 11-14 (U.S.S.R.)

ABSTRACT: Gaseous hydrogen, marked by tritium, is obtained through the decomposition of water vapor passed through incandescent zinc. A saturation meter is used to record the B-radiation of the tritium. Water, nitrogen and CO_2 are removed from the zinc before the operation of decomposition. This is done through a vacuum created by freezing water with liquid nitrogen. The experiments involved three devices: one to obtain the hydrogen with tritium, one to detect the radiation of the latter and a device for saturating metal with hydrogen. The principle metal used was an alloy of aluminum with 10.4% Mg., 1.6% Si and 0.16% Fe. The metal was degassed at about 625°C and saturated at about 570°C. Other alloys were experimented with and graphs were made showing the results. The temperatures and pressures involved in saturating the various metals are noted and the difference in

Card 1/2

APPROVED FOR RELEASE: 06/12/2000 CIA-RDP86-00513R000308920001-8"

"APPROVED FOR RELEASE: 06/12/2000 CIA-RDP86-00513R000308920001-8

Experiment in the Use of Tritium in the Study of the Behavior of Hydrogen in Metals

behavior of hydrogen and tritium is described, the latter involving the application of mudh more energy. There are 6 references, of which 5 are Slavic.

ASSOCIATION

PRESENTED BY:

SUBMITTED:

AVAILABLE:

Card 2/2

APPROVED FOR RELEASE: 06/12/2000 CIA-RDP86-00513R000308920001-8"

"APPROVED FOR RELEASE: 06/12/2000 CIA-RDP86-00513R000308920001-8

CHIZHIKOV, A. I., MOROZENSKIY, L. I., and ZIGEL, G. D.

"An Investigation of the Thermal Work of the Nucleator Used in the Pouring of Steel on a Continuous Conveyor"

report presented at the 7th Conference on the Interaction of the casting Mould and the Casting, sponsored by the Inst. of Mechanical Engineering, Acad. Sci. USSR, 25-28 January 1961.

APPROVED FOR RELEASE: 06/12/2000 CIA-RDP86-00513R000308920001-8"

"APPROVED FOR RELEASE: 06/12/2000 CIA-RDP86-00513R000308920001-8

CHIZHIKOV. A. S.

Chizhikov, A. S.

"The Functional State of the Kidneys in Hypertonic Disease." Minsk State Medical Inst. Minsk, 1955. (Dissertation for the Degree of Candidate in Medical Science)

So: Knizhnaya letopis', No. 27, 2 July 1955

APPROVED FOR RELEASE: 06/12/2000 CIA-RDP86-00513R000308920001-8"

"APPROVED FOR RELEASE: 06/12/2000 CIA-RDP86-00513R000308920001-8

CHIZHIKOV, A.S., kand.med.nauk

Kidney function in rheumatic fever patients. Zdrav. Belor. 5 no.9: 46-48 S '59. (MIRA 12:12)

1. Kafedra fakul'tetskoy terapii (zaveduyushchiy - zasluzhennyy deyatel' nauki, akademik AN BSSR, prof. B.I. Trusevich) Minskogo meditsinskogo instituta.
(RHEUMATIC FEVER) (KIDNEYS)

APPROVED FOR RELEASE: 06/12/2000 CIA-RDP86-00513R000308920001-8"

"APPROVED FOR RELEASE: 06/12/2000 CIA-RDP86-00513R000308920001-8

CHIZHIKOV, A.S., kand.med.nauk

Diagnostic and prognostic significance of the determination of argentophyllic substances in the urine of hypertensive patients. Zdrav.Belor. 6 no.2:40-42 F '60. (MIRA 13:6)

1. Kafedra fakul'tetskoy terapii (zaveduyushchiy - professor B.I. Trusevich) Minskogo meditsinskogo instituta.
(HYPERTENSION) (URINE--ANALYSIS AND PATHOLOGY)

APPROVED FOR RELEASE: 06/12/2000 CIA-RDP86-00513R000308920001-8"

"APPROVED FOR RELEASE: 06/12/2000 CIA-RDP86-00513R000308920001-8

CHIZHIKOV, A.S., kand.med.nauk

Second fraction of bilirubin (direct bilirubin) in patients with hypertension. Zdrav. Bel. 7 no. 2:20-22 F '61. (MIRA 14:2)

1. Kafedra fakul'tetskoy terapii (zav. - zasluzhennyy deyatel' nauki, akademik AN BSSR, prof. B.I. Trusevich) Minskogo meditsinskogo instituta.

(BILIRUBIN) (HYPERTENSION)

APPROVED FOR RELEASE: 06/12/2000 CIA-RDP86-00513R000308920001-8"

"APPROVED FOR RELEASE: 06/12/2000 CIA-RDP86-00513R000308920001-8

CHIZHIKOV, A.S., kand.med.nauk

Stomach function in patients with hypertension. Zdrav.Bel. 7 no.11:12-15 N '61. (MIRA 15:11)

1. Kafedra fakul'tetskoy terapii (zav. - zasluzhennyy deyatel' nauki, akademik AN BSSR, prof. B.I.Trusevich [deceased]) Minskogo meditsinskogo instituta.
(HYPERTENSION) (STOMACH)

APPROVED FOR RELEASE: 06/12/2000 CIA-RDP86-00513R000308920001-8"

"APPROVED FOR RELEASE: 06/12/2000 CIA-RDP86-00513R000308920001-8

S/598/60/000/004/020/020
D217/D302

AUTHORS: Zviadadze, G.N., Karyazina, I.N. and Chizhikov, B. M.

TITLE: On studying the cyclic electrolysis of titanium tetrachloride

SOURCE: Akademiya nauk SSSR. Institut metallurgii. Titan i yego splavy. No. 4, Moscow, 1960. Metallurgiya titana, 184-190

TEXT: Electrolytes containing lower-valency titanium chloride were prepared in graphite vessels, in which mixtures of titanium chloride and powder were placed. After melting the chlorides and subsequently blowing argon through the melt, a vapor-gas mixture of argon and titanium tetrachloride was supplied to the bottom of the graphite vessel. In a number of experiments, $TiCl_4$ without argon was supplied to the melt. In this case, $TiCl_4$ was delivered through a burette, whose end was joined to a graphite tube which was immersed in the melt. In these experiments, the surface of the melt was protected with argon. On finishing the experiments, the melt was allowed to freeze under an argon atmosphere and

Card 1/4

APPROVED FOR RELEASE: 06/12/2000 CIA-RDP86-00513R000308920001-8"

"APPROVED FOR RELEASE: 06/12/2000 CIA-RDP86-00513R000308920001-8

was submitted to chemical analysis. Di- and trivalent titanium were analyzed as follows: After grinding and mixing the electrolyte, two portions were withdrawn and weighed. The first was dissolved in a 20% solution of iron-ammonium alum, and the second was dissolved in 10 N HCl (or in 5% HCl with subsequent acidification with 10 N HCl). To the first solution, H_2SO_4 (1:3) was added until the color of the solution changed from brown to green, after which this solution was titrated with 0.1 N K_2CrO_4 solution in the presence of phenyl antropinic acid. The second solution, after addition of H_2SO_4 (1:3) was also titrated with 0.1 N K_2CrO_4 solution in the presence of the same indicator. If V_1 is the volume, in ml, of K_2CrO_4 solution, used up in the titration of the first solution (calculated per gram of the weighed portion) and V_2 is the volume, in ml, of K_2CrO_4 solution used up in the titration of the second solution (also as calculated per 1 g of the weighed portion), then the following equation can be set up: $0.0024x + 0.0048(V_1-x) = 0.0048V_2$,

APPROVED FOR RELEASE: 06/12/2000 CIA-RDP86-00513R000308920001-8"

"APPROVED FOR RELEASE: 06/12/2000 CIA-RDP86-00513R000308920001-8

where x is the volume of K_2CrO_4 solution (in ml) used up in the titration of the divalent titanium only. For investigating the electrolysis of melts produced by chlorination of titanium by its tetrachloride, a two-stage scheme was adopted, i.e. titanium was at first chlorinated and then electrolytically deposited from the melts produced in the same vessel. Graphite vessels were used for the experiments, which were charged with a mixture of NaCl, KCl and Ti. After melting the electrolyte and supplying the vessel with the required quantity of $TiCl_4$, the melt obtained was electrolyzed without a further $TiCl_4$ supply. Molybdenum wire of 2 mm diameter was used as the cathode and the non-working portion was protected by a porcelain tube. Initially a graphite rod of 15 mm diameter was used as the anode. Subsequently, the surface of the graphite vessel was used as the anode. After the experiment, the melt together with the products of electrolysis were frozen and subjected to phase separation. The experiments have shown that it is possible to obtain titanium by electrodeposition from melts produced by chlorination of titanium by its tetrachloride. An X-ray analysis of the

APPROVED FOR RELEASE: 06/12/2000 CIA-RDP86-00513R000308920001-8"

"APPROVED FOR RELEASE: 06/12/2000 CIA-RDP86-00513R000308920001-8

On studying the cyclic ... S/598/60/000/004/020/020
D217/D302

electrodeposited powders, after treatment of the latter with a 5% HCl solution, confirms that they consist of metallic titanium and donot contain metallic oxides. There are 5 tables and 2 Soviet-bloc references.

Card 4/4

APPROVED FOR RELEASE: 06/12/2000 CIA-RDP86-00513R000308920001-8"

"APPROVED FOR RELEASE: 06/12/2000 CIA-RDP86-00513R000308920001-8

CHIZHIKOV, D. A.

TRATSEVITSKAYA, B.Ya.; TRUSOVA, V.G.; CHIZHIKOV, D.A.; KORSUNSKAYA, V.N.

Separation of niobium and titanium in chloride complexes. Trudy Inst. met. no.2:87-91 '57. (MIRA 10:11)

(Chlorides) (Niobium) (Titanium)

APPROVED FOR RELEASE: 06/12/2000 CIA-RDP86-00513R000308920001-8"

"APPROVED FOR RELEASE: 06/12/2000 CIA-RDP86-00513R000308920001-8

CHIZHIKOV, D.I.

USSR/ Physical Chemistry - Electrochemistry

B-12

Abs Jour : Referat Zhur - Khimiya, No 4, 1957, 11360

Author : Chizhikov D.I., Ustinskiy B.Z.

Title : Investigation of Anodic Polarization of Sulfides of Copper, Nickel and Some Allos of these Sulfides

Orig Pub : Zh. prikl. khimii, 1956, 29, No 7, 1129-1131

Abstract : In continuation of the authors' work (Zh. prikl. khimii, 1949, 22,12) an investigation was made of the dependence upon current density i and duration of electrolysis, of the potential φ of sulfide anodes having the following composition: Cu_2S; 75% Cu_2S + 25% Ni_3S_2; 50% Cu_2S + 50% Ni_3S_2; 25% Cu_2S + 75% Ni_3S_2; Ni_3S_2 in solution 100 g/l H_2SO_4; 70 g/l H_2SO_4 + 30 g/l Ni^{2+}; 10 g/l H_2SO_4 + 60 g/l Ni^{2+}.

Aodes of Cu_2S + Ni_3S_2 alloys dissolve at less positive φ, than anodes of Cu_2S and Ni_3S_2 taken separately. Cu of Cu_2S passes in solution at more positive φ than Ni of Ni_3S_2. The conclusion is reached that with a low i there will be dissolved from Cu_2S + Ni_3S_2 alloys, first structural components (Ni_3S_2, crystals of eutectic 0.9 Ni_3S_2 + 0.1 Cu_2S), that have less positive φ.

1/1

APPROVED FOR RELEASE: 06/12/2000 CIA-RDP86-00513R000308920001-8"

"APPROVED FOR RELEASE: 06/12/2000 CIA-RDP86-00513R000308920001-8

CHIZHIKOV, D.M. (Moskva); SHARKOV, A.I. (Moskva); KITLER, I.N. (Moskva)

Interaction during the sintering of aluminum oxide and soda in the presence of reducing agents. Izv. AN SSSR. Met. i gor. delo no.1:51-57 Ja-F '64. (MIRA 17:4)

APPROVED FOR RELEASE: 06/12/2000 CIA-RDP86-00513R000308920001-8"

"APPROVED FOR RELEASE: 06/12/2000 CIA-RDP86-00513R000308920001-8

BEREZKINA, L.G.; YERMAKOVA, N.I.; CHIZHIKOV, D.M.

Kinetics of the reduction of tin dioxide by carbon monoxide.
Kin. i kat. 5 no.5:815-822 S-O '64. (MIRA 17:12)

1. Institut metallurgii imeni Baykova.

APPROVED FOR RELEASE: 06/12/2000 CIA-RDP86-00513R000308920001-8"

"APPROVED FOR RELEASE: 06/12/2000 CIA-RDP86-00513R000308920001-8

FRENTS, Galina Sergeyevna; CHIZHIKOV, D.M., otv. red.; CHERNOV, A.N., red.; KYLINA, Yu.V., tekhn. red.

[Oxidation of metal sulfides] Okislenie sul'fidov metallov. Moskva, Izd-vo "Nauka," 1964. 189 p. (MIRA 17:4)

1. Chlen-korrespondent AN SSSR (for Chizhikov).

APPROVED FOR RELEASE: 06/12/2000 CIA-RDP86-00513R000308920001-8"

"APPROVED FOR RELEASE: 06/12/2000 CIA-RDP86-00513R000308920001-8

CHIZHIKOV, David Mikhaylovich; SCHASTLIVYY, Viktor Petrovich

[Selenium and selenides] Selen i selenidy. Moskva, Nauka, 1964. 319 p. (MIRA 17:10)

APPROVED FOR RELEASE: 06/12/2000 CIA-RDP86-00513R000308920001-8"

"APPROVED FOR RELEASE: 06/12/2000 CIA-RDP86-00513R000308920001-8

CHIZHIKOV, D.M. (Moskva); VOLKOVA, M. Ye. (Moskva), TSVETKOV, Yu.V. (Moskva)

Certain physicochemical properties of melts in the system tin monoxide - silica. Izv. AN SSSR Met. i gor. delo no.3: 82-90 My-Je '64 (MIRA 17:7)

APPROVED FOR RELEASE: 06/12/2000 CIA-RDP86-00513R000308920001-8"

"APPROVED FOR RELEASE: 06/12/2000 CIA-RDP86-00513R000308920001-8

VOLKOVA, M.Ye. (Moskva); TSVETKOV, Yu.V. (Moskva); CHIZHIKOV, D.M. (Moskva)

Thermodynamics and kinetics of the carbothermic reduction of tin oxide from molten silicates. Izv. AN SSSR. Met. i gor. delo no.4:63-67 Jl-Ag '64. (MIRA 17:9)

APPROVED FOR RELEASE: 06/12/2000 CIA-RDP86-00513R000308920001-8"

"APPROVED FOR RELEASE: 06/12/2000 CIA-RDP86-00513R000308920001-8

CHIZHIKOV, D.M.; KITLER, I.N.; SHARKOV, A.I.

Carbonization of alkali during sodium ferrite reduction by carbon monoxide. Dokl. AN SSSR 154 no.4:936-939 F '64. (MIRA 17:3)

1. Institut metallurgii im. A.A. Baykova. 2. Chlen-korrespondent AN SSSR (for Chizhikov).

APPROVED FOR RELEASE: 06/12/2000 CIA-RDP86-00513R000308920001-8"

"APPROVED FOR RELEASE: 06/12/2000 CIA-RDP86-00513R000308920001-8

BEREZKINA, L.G.; YERMAKOVA, N.I.; CHIZHIKOV, D.M.

Behavior of tin monoxide on heating. Zhur. neorg. khim. 9 no.7:1760-1763 Jl '64. (MIRA 17:9)

APPROVED FOR RELEASE: 06/12/2000 CIA-RDP86-00513R000308920001-8"

"APPROVED FOR RELEASE: 06/12/2000 CIA-RDP86-00513R000308920001-8

1ST AND 2ND ORDERS

PROCESSES AND PROPERTIES INDEX

Purifying zinc by dry method. D. M. Chizhikov. *Mineralnoe Suir'e i Tsvetnoie Met.* 4, 1211-8(1929). —The processes of purifying Zn are described briefly. M. A. I.

ASM SLA METALLURGICAL LITERATURE CLASSIFICATION

APPROVED FOR RELEASE: 06/12/2000 CIA-RDP86-00513R000308920001-8"

"APPROVED FOR RELEASE: 06/12/2000 CIA-RDP86-00513R000308920001-8

Ca

18

The Volkhov Aluminum Combine. D. M. Chizhikov. *Tsvetnye Metal.* 1933, No. 4, 3-12.—The usual processes of obtaining Al from bauxites contg. low SiO_2 (3-4%) are not applicable to Russian bauxites found in large quantities at Volkhov, because they are low in Al and contain up to 20% SiO_2. Lab. expts. and plant tests were made to develop a practical process. The principal difficulties of the process, the removal of SiO_2, carbonisation and the evapn. of soda, have not yet been overcome, and no practicable process of treating the ores has yet been worked out.

B. N. Daniloff

ASM-SLA METALLURGICAL LITERATURE CLASSIFICATION

APPROVED FOR RELEASE: 06/12/2000 CIA-RDP86-00513R000308920001-8"

"APPROVED FOR RELEASE: 06/12/2000 CIA-RDP86-00513R000308920001-8

PROCESSES AND PROPERTIES INDEX

CA

9

Chlorination in nonferrous and gold industry. D. M. Chizhikov and A. Yu. Brechstedt. *Tsvetnaia Metal.* 10[illegible], No. 5, 24-37.—The authors describe the extn. of metals from both oxidized and sulfidic Pb-Zn ores by chlorination. The samples of ores contained Pb 5-25, Zn 2-14, Fe 2-14 and Cu 0.18-0.[illegible]2%. Some of the ores contained As (2.1 and 5.7%), [illegible]g (225-80 g. per ton), and traces of Au. Preliminary lab. expts. showed that 90% of the metal content of preliminarily calcined ore can be volatilized as chlorides by heating in dry Cl gas at 1000° for 4 hrs. Further expts. showed that by chlorination of oxidized ores at 900-1000°, with mixts. of Cl and H_2O vapor, 85% of Zn and Pb can be converted into volatile chlorides. At lower temps. (about 700°) the major part of the Zn and Pb remains in the ore in the form of nonvolatile chlorides. With the addn. of 20% charcoal the temp. can be lowered to 600° with the conversion of 90% of Zn and Pb into nonvolatile chlorides. With sulfidic and mixed ores the max. extn. is obtained by 4-hr. treatment in a mixt. of Cl and water vapor at 700°.

B. N. Danilov

ASM-SLA METALLURGICAL LITERATURE CLASSIFICATION

APPROVED FOR RELEASE: 06/12/2000 CIA-RDP86-00513R000308920001-8"

"APPROVED FOR RELEASE: 06/12/2000 CIA-RDP86-00513R000308920001-8

1ST AND 2ND ORDERS

PROCESSES AND PROPERTIES INDEX

First Soviet nickel. D. M. Chizhikov. *Tsvetnye Metal.* 1933, No. 6, 3-16. A description of the first Soviet nickel plant, at Ufaley, Ural. The ore supply comes from the oxidized Ni ore deposits in the vicinity of the works with an av. Ni content of 2%. The proved ore contains 10,000 tons of Ni. It is intended to smelt the ore into the Fe-Ni mat, and sep. and refine the Ni. The approved metallurgical processes, furnaces and the ore-mining conditions are described. The plant was to be put in operation during the winter of 1933. B. N. Damloff

ASM-SLA METALLURGICAL LITERATURE CLASSIFICATION

APPROVED FOR RELEASE: 06/12/2000 CIA-RDP86-00513R000308920001-8"

"APPROVED FOR RELEASE: 06/12/2000 CIA-RDP86-00513R000308920001-8

Complex treatment of polymetal sulfide ore of the Takeli (Middle Asia) deposits by means of gaseous chlorine. D. M. Chizhikov and A. S. Shakhov. *Tsvetnaia Metal.* 1934, No. 2, 63-72.—The Takeli sulfide ore contains on the av. As 0.56, Pb 2.76, Zn 2.92, Fe_2O_3 10.70, S 2.00, Cu 0.18, Al_2O_3 14.20, CaO 2.85, MgO 1.27, CO_2 1.03, SiO_2 47.50, H_2O 0.22, Ag 316 g./ton and Au trace. Expts. on chlorination with gaseous Cl were carried out at temps. of 300-700° at 100° intervals. It was found that ore treated thus at 800° and extd. with H_2O and a satd. soln. of NaCl yields 93-5%, 92-3% and 90% of its Zn, Pb and Ag, resp. The As volatilizes and is condensed as $AsCl_3$. A large plant for electrolysis of NaCl is being constructed in the vicinity of the polymetal sulfide deposit to furnish Cl_2 for its treatment. S. L. Malovsky

ASM-SLA METALLURGICAL LITERATURE CLASSIFICATION

APPROVED FOR RELEASE: 06/12/2000 CIA-RDP86-00513R000308920001-8"

"APPROVED FOR RELEASE: 06/12/2000 CIA-RDP86-00513R000308920001-8

1ST AND 2ND ORDERS

3RD AND 4TH ORDERS

PROCESSES AND PROPERTIES INDEX

77

***Use of Pure Oxygen in Lead Refining.** D. M. Chizhikov and M. N. Sokolov (*Tsvetnye Metally* (*Non-Ferrous Metals*), **1934**, (7), 59–73; *C. Abs.*, 1935, **29**, 4303).—[In Russian.] Oxygen was blown through molten impure lead, contained in an iron crucible at lower temperatures and in a clay crucible at higher temperatures, by means of a porcelain tube. At 330–500° C. a considerable time is required to remove all the zinc, arsenic, antimony, and tin, which leads to the formation of litharge (40–47% by weight of charge). At 860°–900° C. the removal of the impurities is almost complete in 5–10 minutes, and litharge formation is only 4·0–5·5%. As compared with air, oxygen speeds up the reaction and, therefore, results in a saving of fuel.—S. G.

ASM/SLA METALLURGICAL LITERATURE CLASSIFICATION

APPROVED FOR RELEASE: 06/12/2000 CIA-RDP86-00513R000308920001-8"

"APPROVED FOR RELEASE: 06/12/2000 CIA-RDP86-00513R000308920001-8

1ST AND 2ND ORDERS

3RD AND 4TH ORDERS

PROCESSES AND PROPERTIES INDEX

Cu

18

Sulfate formation from the action of chlorine on mixtures of cupric sulfate, cupric oxide, cuprous sulfide and ferric oxide. D. M. Chibikov and G. S. Balikhina. *J. Chem. Ind.* (Moscow) 12, 1038-41(1935). When Cl_2 reacts with a mixt. of Cu_2S and CuO, a small amt. of $CuSO_4$ is formed. Addn. of Fe_2O_3 to the mixt. greatly increases the amt. of $CuSO_4$, especially at higher temps. Addn. of $CuSO_4$ contg. H_2O of crystn. decreases the formation of more $CuSO_4$ at high temp. Anhyd. $CuSO_4$ has little effect. $CuSO_4$ and Cu_2S react to give S, which also oxidizes CuO, but not as easily as Cu_2S does. When a mixt. of $CuSO_4$ (H_2O), CuO, Cu_2S and Fe_2O_3, approximating the compn. of Cu pyrites slag, is chlorinated, the amt. of $CuSO_4$ formed rises to 85% of the possible amt.

H. M. Leicester

ASM-SLA METALLURGICAL LITERATURE CLASSIFICATION

APPROVED FOR RELEASE: 06/12/2000 CIA-RDP86-00513R000308920001-8"

"APPROVED FOR RELEASE: 06/12/2000 CIA-RDP86-00513R000308920001-8

Ca

9

The purification of solutions from iron in the hydrometallurgy of zinc. D. M. Chizhikov and G. S. Balikhina. *Tsvetnye Metal.* 1936, No. 9, 67-70. Air and O_2 are not satisfactory for oxidizing Fe to the trivalent state before pptg. it from the electrolytic soln. MnO_2 in acid solns. or in neutral solns. contg. ZnO is best for this purpose.

H. M. Leicester

ASM-SLA METALLURGICAL LITERATURE CLASSIFICATION

APPROVED FOR RELEASE: 06/12/2000 CIA-RDP86-00513R000308920001-8"

"APPROVED FOR RELEASE: 06/12/2000 CIA-RDP86-00513R000308920001-8

2

Solubility of the systems lead chloride-calcium chloride, lead chloride-zinc chloride and calcium chloride-zinc chloride. D. M. Chizhikov and A. S. Shakhov. *J. Applied Chem.* (U. S. S. R.) 9, 1387-93(in German 1393) (1936).—Soly. isotherms for (1) $PbCl_2$-$ZnCl_2$-H_2O, (2) $PbCl_2$-$CaCl_2$-H_2O and (3) $ZnCl_2$-$CaCl_2$-H_2O at 25° and 60° were constructed. In systems (1) and (2) the soly. isotherms pass through a min., showing the formation of undetd. double salts. The min. soly. of $PbCl_2$ at 25° for (1) is 0.08 g. at a $ZnCl_2$ concn. of 26.0 g. and at 60° it is 0.147 g. at a $ZnCl_2$ concn. of 43.71 g./100 g. of soln. The min. soly. of $PbCl_2$ in (2) at 25° is 0.12 g. at a $CaCl_2$ concn. of 4.83 g. and at 60° it is 0.471 g. at a $CaCl_2$ concn. of 4.17 g./100 g. of soln. System (3) has binary points at 25°: $ZnCl_2$ 60.86 and $CaCl_2$ 22.29 g./100 g. of soln. and at 60°: $ZnCl_2$ 50.19 and $CaCl_2$ 28.30 g./100 g. of soln. The forms of the isotherms of (3) show the possibility of formation of a complex. Fourteen references.

A. A. Podgorny

ASB-SLA METALLURGICAL LITERATURE CLASSIFICATION

APPROVED FOR RELEASE: 06/12/2000 CIA-RDP86-00513R000308920001-8"

"APPROVED FOR RELEASE: 06/12/2000 CIA-RDP86-00513R000308920001-8

CA

18

Precipitation by lime of zinc and iron in the form of hydroxides from solutions containing zinc and ferrous chlorides and the properties of the resulting precipitates. D. M. Chizhikov and O. N. Soboleva. *J. Chem. Ind.* (Moscow) 13, 342-5(1936).—When solns. of $ZnCl_2$ and $FeCl_2$ are treated with very finely divided $Ca(OH)_2$ for 30 min., the ratio of Zn to Fe in the ppt. is very much higher than in the soln. When the ppt. is heated to 400° or above, the ZnO in the presence of Fe becomes very slightly sol. in 5% H_2SO_4 or HCl, and even after heating only to 300°, all of the Zn does not dissolve. H. M. Leicester

ASM-SLA METALLURGICAL LITERATURE CLASSIFICATION

APPROVED FOR RELEASE: 06/12/2000 CIA-RDP86-00513R000308920001-8"

"APPROVED FOR RELEASE: 06/12/2000 CIA-RDP86-00513R000308920001-8

PROCESSES AND PROPERTIES INDEX

4/

CA

The oxidation of lead and zinc sulfides by pure oxygen. D. M. Chizhikov and G. S. Bakhina. *Tsvetnye Metal.* 1937, No. 4, 72-4.--Oxidation of powd. galena and pptd. ZnS begins strongly only at 300° and at 600° is nearly complete. ZnS is more completely oxidized than PbS.
H. M. Lakeester

ASM-SLA METALLURGICAL LITERATURE CLASSIFICATION

APPROVED FOR RELEASE: 06/12/2000 CIA-RDP86-00513R000308920001-8"

"APPROVED FOR RELEASE: 06/12/2000 CIA-RDP86-00513R000308920001-8

CA

PROCESSES AND PROPERTIES INDEX

Chlorination of tin concentrates. D. M. Chizhikov and G. S. Balikhina. *Tsvetnye Metal.* No. 8, 68-75 (1937).—The authors' expts. showed that Sn can be recovered from ore by chlorination, and the following advantages of this method are claimed: (1) Concentrates as low in Sn as 25-30% can be treated while pyrometallurgical processes require 50 to 60% Sn concentrates. This means that the use of this process will result in increased recovery of Sn from ore, because the losses in tailings are the higher the richer the concentrate. (2) Metal free from impurities can be obtained whereas in pyrometallurgical processes the tin is contaminated by other metallic elements and requires further refining operations. The authors experimented with chlorination of oxides and sulfides of Sn, Pb, Zn, Cu, Fe, Ag and As at temps. from 150° to 700°. These metals, with the exception of Fe, are converted into chlorides at 700° to the extent of 79 to 100%, while SnO_2 is little affected. At 700° the chlorides Zn and As volatilize, and the chlorides of Pb, Fe, Cu and Ag can be easily leached out. Natural SnO_2 (cassiterite) does not react with Cl. However, in presence of C, CO, or oxides of Fe, chlorination takes place. Samples of cassiterite contg. 97.4% SnO_2 and 1.79% Fe_2O_3 were chlorinated for 2 hrs. in the presence of C and (or) CO at 400°, 600° and 800°. At 800° in presence of CO, 10.3% of Sn was converted into chloride, and in presence of solid C, 73%. When both C and CO were present 84% of the Sn was chlorinated. With Fe_2O_3 present (in the ratio of 1 part Fe to 3 parts Sn) 5.8% Sn was chlorinated at 800°. The chlorination is still further favored by simultaneous presence of C and Fe_2O_3, or CO and Fe_2O_3 whereby over 98% of Sn is chlorinated. Further expts. on semicom. scale are contemplated. B. N. Daniloff

ASM-SLA METALLURGICAL LITERATURE CLASSIFICATION

APPROVED FOR RELEASE: 06/12/2000 CIA-RDP86-00513R000308920001-8"

"APPROVED FOR RELEASE: 06/12/2000 CIA-RDP86-00513R000308920001-8

CHIZHIKOV4D8M8

600

1. CHIZHIKOV, D.M.

2. USSR (600)

"An Analysis of the Operation of the Ridder Lead-Smelting Plant from the Point of View of Metal Losses", Tsvet. Met 14, No. 10-11, Oct.-Nov. 1939.

9. [redacted] Report U-1506, 4 Oct 1951

APPROVED FOR RELEASE: 06/12/2000 CIA-RDP86-00513R000308920001-8"

"APPROVED FOR RELEASE: 06/12/2000 CIA-RDP86-00513R000308920001-8

CHIZHIKOV, D. M.

"Zinc Metallurgy" (bk) by Chizhikov, D. M. Reviewed by Volskiy, A. M. Tsvet. Met. 14, No. 8, August 1939.

U-1506, 4 Oct. 1951

APPROVED FOR RELEASE: 06/12/2000 CIA-RDP86-00513R000308920001-8"

"APPROVED FOR RELEASE: 06/12/2000 CIA-RDP86-00513R000308920001-8

1. CHIZHIKOV, D.M., Corr Mem of Academy of Sciences

2. USSR (600)

"Scientific Problems in Nonferrous Metallurgy in the third Five-Year Plan," Iz. Ak. Nauk SSSR, Otdel, Tekh. Nauk, No. 5, 1940

9. [redacted] Report U-1530, 25 Oct. 1951

APPROVED FOR RELEASE: 06/12/2000 CIA-RDP86-00513R000308920001-8"

"APPROVED FOR RELEASE: 06/12/2000 CIA-RDP86-00513R000308920001-8

CHIZHIKOV, DAVID MIKHAILOVICH.

The chlorine method of processing tin ores and concentrates. Moskva, Izd-vo Akademii nauk SSSR, 1941. 70 p. (43-50354)

TN793.C45

APPROVED FOR RELEASE: 06/12/2000 CIA-RDP86-00513R000308920001-8"

"APPROVED FOR RELEASE: 06/12/2000 CIA-RDP86-00513R000308920001-8

CHIZHIKOV, D. M.

"On the Development of the National Economy of the Urals under War Conditions," 1941

APPROVED FOR RELEASE: 06/12/2000 CIA-RDP86-00513R000308920001-8"

"APPROVED FOR RELEASE: 06/12/2000 CIA-RDP86-00513R000308920001-8

1ST AND 2ND ORDERS

PROCESSES AND PROPERTIES INDEX

3RD AND 4TH ORDERS

Ca

9

The significance of the quality of flotation concentrates in the metallurgy of nonferrous metals. D. M. Chizhikov. *Tsvetnye Metal.* 1941, No. 1, 24-8; *Khim. Referat. Zhur.* 4, No. 9, 101(1941).—Pb concentrates should contain at least 60% Pb and not more than 1% Cu and 5% Zn, because large amts. of Cu and Zn interfere with the smelting and refining of Pb. Zn concentrate must contain at least 55% Zn and not more than 2% Pb and 8% Fe. During flotation the Cd must be concd. in the Zn product. Sn concentrate should contain not less than 45% of Sn. The concentrate vitrifies if the content of Sn is 15-20%. Concentrates contg. 15-20% of Sn can be treated by chlorination. Hg concentrates should contain up to 30-45% of Hg.

W. R. Henn

COMMON ELEMENTS

MATERIALS INDEX

ASM-SLA METALLURGICAL LITERATURE CLASSIFICATION

APPROVED FOR RELEASE: 06/12/2000 CIA-RDP86-00513R000308920001-8"

"APPROVED FOR RELEASE: 06/12/2000 CIA-RDP86-00513R000308920001-8

PROCESSES AND PROPERTIES INDEX

CA

9

Continuous purification of Zn by distillation. D. M. Chizhikov and N. N. Sevriukov. *Bull. acad. sci. U.R.S.S., Classe sci. tech.* **1941**, No. 9, 89-97.—Vapor compn. over Cd-Zn alloys is detd. by passing H over the molten alloys; it is ascertained that the rate of H flow is sufficient for the equil. to be established. The vapor pressure of Zn is 16, 86, and 73 mm. Hg, and of Cd 63, 146, and 200 mm. Hg at 600°, 650°, and 700°, resp. The b.p. and the vapor compn. at b.p. for atm. pressure are measured: at 900° the Cd concn. is 3 at.-% in liquid and 9 at.-% in vapor; at 860° 17% and 50%; at 800° 49% and 73%; at 790° 59% and 76%; and at 780° 70% and 90%. In an exptl. rectification column of graphite Zn contg. 2% of Cd gave at 780°, Zn contg. 0.084% of Cd and dust contg. 30% of Cd, and Zn contg. 0.21% of Cd gave at 750°, Zn containing 0.002% of Cd and dust contg. 57% of Cd.

B. C. P. A.

ASM-SLA METALLURGICAL LITERATURE CLASSIFICATION

APPROVED FOR RELEASE: 06/12/2000 CIA-RDP86-00513R000308920001-8"

"APPROVED FOR RELEASE: 06/12/2000 CIA-RDP86-00513R000308920001-8

PROCESSES AND PROPERTIES INDEX

CA

9

Concentration of oxidized ores of the colored metals. D. M. Chizhikov, N. N. Zaprudskii and S. M. Shurygin. *Tsvetnye Metal.* 16, No. 8, 37-8(1941); *Chem. Zentr.* 1943, I, 1008.—Flotation of oxidized ores is in general carried out after preliminary surface sulfidization of the oxidized minerals in the wet way with Na sulfide or in the dry way with elementary S. By heating a mixt. of $CuCO_3$ and S at 350° for 25 min. practically all the Cu is converted into sulfide. Sulfidization of $ZnCO_3$ requires a higher temp. than that of $CuCO_3$. When a mixt. of $ZnCO_3$ and S is heated at 400° for 1 hr. 80% of the Zn is converted into the sulfide. In the sulfidization of the oxidized Cu ores of the Dzhezkazgan deposits 90% of the Cu is converted into sulfide compds. by heating 1 hr. at 150°. Besides the carbonate, other O-contg. compds. of Cu, e. g., chrysocolla or brochantite, can be simply sulfidized. Sulfidization increases the flotation yield from 37-40% to 70-75%, with a richer concentrate being obtained. The results thus indicate that the flotation yield is definitely increased by a preliminary dry sulfurization of oxide and other O-contg. Cu ores.

M. G. Moore

ASM-SLA METALLURGICAL LITERATURE CLASSIFICATION

APPROVED FOR RELEASE: 06/12/2000 CIA-RDP86-00513R000308920001-8"

"APPROVED FOR RELEASE: 06/12/2000 CIA-RDP86-00513R000308920001-8

CA

9

Flotation of oxidized ores of the colored metals. (Co-ment on the paper by D. M. Chizhikov, N. N. Zaprudskii, and S. M. Shurygin on "Concentration of oxidized ores of the colored metals.") O. S. Bogdanov, V. V. Dolivo-Dobrovolskii, and A. I. Andreeva. *Tsvetnye Metal* 10, No. 20, 20-2(1941); *Chem. Zentr.* 1944, I, 1218; cf. *C.A.* 38, 3933°.—The process of complete sulfidization is of interest in the flotation of hard, oxidized ores, difficult to concentrate.

M. G. Moore

ASM-SLA METALLURGICAL LITERATURE CLASSIFICATION

APPROVED FOR RELEASE: 06/12/2000 CIA-RDP86-00513R000308920001-8"

"APPROVED FOR RELEASE: 06/12/2000 CIA-RDP86-00513R000308920001-8

CA

9

Light metals. E. I. Khazanov and D. M. Chizhikov. U.S.S.R. 69,628, Nov. 30, 1947. The vapor mixt. obtained when the metal oxides are reduced with C are sprayed with a molten high-boiling metal or alloy having a low m.p., e.g., Sn, Pb, or their alloy. This method of rapid cooling prevents the re-oxidation of the light metal.
M. Hosch

APPROVED FOR RELEASE: 06/12/2000 CIA-RDP86-00513R000308920001-8"

"APPROVED FOR RELEASE: 06/12/2000 CIA-RDP86-00513R000308920001-8

1ST AND 2ND ORDERS

PROCESSES AND PROPERTIES INDEX

3RD AND 4TH ORDERS

2

Deposition of metals from chloride solutions. D. M. Chizhikov and B. Ya. Tratsevitskaya (A. A. Baikov Inst. Metallurgy Acad. Sci. U.S.S.R.). *Izvest. Akad. Nauk S.S.S.R., Otdel. Tekh. Nauk* 1947, 1653-60.—The rate of deposition from chloride soln. of H, Cu, and Pb by metallic Sn, and of H, Sn, and Fe by metallic Zn was detd. at 20-75°. Sn displaced Cu completely and Pb partially. Zn displaced Sn almost completely but did not displace Fe at a concn. of 2 g. per l. Fe^{++} or less.

H. W. Rathmann

COMMON ELEMENTS

OPEN

MATERIALS INDEX

COMMON VARIABLES INDEX

ASM-SLA METALLURGICAL LITERATURE CLASSIFICATION

MATERIALS INDEX

AUTHOR INDEX

1ST AND 2ND LETTER

APPROVED FOR RELEASE: 06/12/2000 CIA-RDP86-00513R000308920001-8"

"APPROVED FOR RELEASE: 06/12/2000 CIA-RDP86-00513R000308920001-8

CHIZHIKOV, D. M. PA 57T59

USSR/Metals Dec 1947
Precipitation
Kinetics

"Cementation of Metals From Their Chloride Solutions," D. M. Chizhikov, B. Ya. Tratsevitskaya, Corr Members, Acad Sci USSR, Metal Inst imeni A. A. Baykov, Acad Sci USSR, 8½ pp

"Izv Akad Nauk SSSR, Otdel Tekh Nauk" No 12

Authors conducted experiments to study kinetics of the cementation of metals from their chloride compounds. Metals used were Zn, Fe, Sn, Pb, H, and Cu. Among results obtained was the fact that iron does not displace zinc at concentrations of Fe**2 grams per liter or less. Submitted, 15 Jul 1947.

57T59

APPROVED FOR RELEASE: 06/12/2000 CIA-RDP86-00513R000308920001-8"

"APPROVED FOR RELEASE: 06/12/2000 CIA-RDP86-00513R000308920001-8

CHIZHIKOV, David Mikhailovich

CHIZHIKOV, David Mikhailovich. Metallurgiia tiazhelykh tsvetnykh metallov. Moskva, AN SSSR, 1948. 1056 p. (Akademiia Nauk SSSR. Institut metallurgii.)
"Spisok osnovnoi literatury": p. 1025-1026

DLC: TN758.C5

SO: LC, Soviet Geography, Part I, 1951, Uncl.

APPROVED FOR RELEASE: 06/12/2000 CIA-RDP86-00513R000308920001-8"

"APPROVED FOR RELEASE: 06/12/2000 CIA-RDP86-00513R000308920001-8

1ST AND 2ND ORDERS

PROCESSES AND PROPERTIES INDEX

3RD AND 4TH ORDERS

9

Ca

Interaction between tin and metal silicates. D. M. Chizhikov and E. I. Khazanov (A. A. Baikov Metallurg. Inst. Acad. Sci. U.S.S.R., Moscow). *Izvest. Akad. Nauk S.S.S.R., Otdel. Tekh. Nauk.* 1948, 223-8.—In view of detg. the most favorable conditions for the production of Fe-free Sn from SnO_2, the equil. $Sn + 2FeO \rightleftarrows 2Fe + SnO_2$ (1) and $Sn + FeO \rightleftarrows Fe + SnO$ (2) was calcd. Thermodynamic calcn. gives (1) at 298, 505, 1041, 1179, 1400, 1473, 1674, 1807° K, $\Delta F^\circ = -6.730, -3.574, 6.600, 9.163, 13.328, 14.652, 17.203, 20.603$ kcal./mol., $\ln K = 4.93, 1.55, -1.40, -1.72, -2.09, -2.19, -2.25, -2.5$; (2) at 298, 505, 1041, 1179, 1400° K, $\Delta F^\circ = -2.790, -2.026, -0.553, 0.371, 1.226$, $\ln K = 2.78, 0.88, 0.116, -0.009, -0.192$. Expt. shows that presence of SiO_2 and CaO influences the equil. relatively little. Thus, in 30-min. fusion expts. with artificial slags of 3 different compns., resulting in metal: I. Sn 97.77, Fe 2.23 mole %, II. 96.28, 3.72, III. 92.26, 7.74, and in slags: I. SiO_2 32.92, FeO 25.72, CaO 32.87, SnO 3.06, Al_2O_3 5.43 mole %, II. 42.10, 18.73, 32.47, 1.93, 4.77, III. 47.87, 38.84, 8.39, 1.81, 3.06, the exptl. equil. const. Fe.SnO/Sn.FeO at 1200°C. is, resp., I. 2.71×10^{-3}, II. 3.98×10^{-3}, III. 3.9×10^{-3}. In terms of the acidity of the slag, $A = (SiO_2)/(FeO + CaO)$, where the compds. express the O of SiO_2, FeO, and CaO, and of the ratio FeO/CaO, the Fe content in the metal is lower at $A \sim 1.30$ than at 1.25, the content of Sn in the slag lower at $A \sim 1.25$. Both Sn in the slag and Fe in the metal increase with increasing FeO/CaO, e.g., A 1.25, FeO/CaO = 1, 2, 3, Sn in slag 3.60, 5.20, 5.65%, Fe in metal 1.32, 3.28, 6.05%, A 1.50, FeO/CaO = 1, 2, 3, Sn in slag 5.04, 6.35, 7.45%, Fe in metal 0.60, 2.50, 2.65%. At the optimum FeO/CaO = 1, A = 1.00, 1.25, 1.50, 2.00, Sn in slag 5.37, 3.60 (min.), 5.04, 8.60%, Fe in metal 0.88, 1.32, 0.60 (min.), 1.10%. The effect of Al_2O_3 is illustrated by the example: const. A 1.25, const. FeO/CaO = 1, Al_2O_3 0.00, 2.00, 4.00, 8.00, 12.00%, Sn in slag 3.6, 6.08, 7.40, 10.09, 11.63%, Fe in metal 1.32, 0.51, 0.49, 0.39, 0.93%. Effect of Na_2O: at const. A 1.25, FeO/CaO = 1, Na_2O 0.00, 3.00, 6.00, 9.00%, Sn in slag 3.6, 2.34, 2.69, 2.92%, Fe in metal 1.32, 1.42, 2.59, 3.41%. The degree of extn. of Sn from cassiterite falls rapidly with A increasing over 1.25, e.g., at FeO/CaO = 1, A = 1.00, 1.25, 1.50, 2.00, extn. of Sn 62.1, 62.1, 43.6, 25.2%. Sn gone into the slag 12.50, 30.44, 34.30, 55.60%.

N. Thon

ASM-SLA METALLURGICAL LITERATURE CLASSIFICATION

APPROVED FOR RELEASE: 06/12/2000 CIA-RDP86-00513R000308920001-8"

"APPROVED FOR RELEASE: 06/12/2000 CIA-RDP86-00513R000308920001-8

1ST AND 2ND ORDERS

PROCESSES AND PROPERTIES INDEX

4

Electrochemical solution of metal sulfides. D. M. Chizhikov and B. Z. Ustinskii (A. A. Baikov Metallurg. Inst. Acad. Sci. U.S.S.R., Moscow). *Izvest. Akad. Nauk S.S.S.R., Otdel. Tekh. Nauk* **1948**, 229–34.—Artificial pure sulfides of Cu, Ni, and Co, in plates 80 × 40 × 15 mm., 300–350 g., were subjected to anodic soln. in 10% H_2SO_4 in 12-hr. runs at 35–40°. With 100 amp./sq. m., CuS is dissolved in H_2SO_4 100 g./l. with an anodic current efficiency *e* of 60–65%, with visible evolution of H_2S; in H_2SO_4 100 g./l. + Cu^{++} 40 g./l., anodic *e* rises to 74%, no H_2S is evolved. Under 100 amp./sq. m., with a Cu cathode, in H_2SO_4, the voltage is 2.0–2.5 v., rising to 4 v. at the end of 12 hrs.; under 200 amp./sq. m., it is 6.8 v. Under 100 amp./sq. m., the sludge contains Cu 32, free S 60.1, sulfide S 5.00%. In anodic soln. of NiS in H_2SO_4 100 g./l., under 100, 200, and 300 amp./sq. m., *e* is 63, 66, and 60%, resp.; the voltage increases in 12 hrs. from 0.6 to 1.7, 1.5 to 2.5, and 1.7 to 3.5 v., resp.; the amt. of Ni^{++} in soln. at the end of 12 hrs. is 23, 48, and 61 g./l., resp.; Ni content of the sludge is 33.8, 21.9, and 16.3%; free S content of the sludge 37.8, 48.7, and 56.4%; sulfide S content 10.5, 5.1, and 3.5%, resp. In anodic soln. of CoS in H_2SO_4 100 g./l., under 100, 200, and 300 amp./sq. m., *e* is 67, 65, and 63%, resp.; the voltage increases in 12 hrs. from 1.4 to 1.7, 1.7 to 2.1, and 1.9 to 2.8 v., the amt. of Co^{++} in soln. at the end of 12 hrs. is 21.6, 40.5, and 57 g./l.; Co content of the sludge 31, 22, and 20%, free S content of the sludge 40.00, 12.8, and 13.11%; sulfide S content 0.04, 0.0, and 0.00%, resp. Under the above conditions, electrolysis with CuS anodes gave at the cathode Cu + H_2, with NiS and CoS anodes, only H_2.

ASB-SLA METALLURGICAL LITERATURE CLASSIFICATION

APPROVED FOR RELEASE: 06/12/2000 CIA-RDP86-00513R000308920001-8"

"APPROVED FOR RELEASE: 06/12/2000 CIA-RDP86-00513R000308920001-8

CHIZHIKOV, D. M.

PA 43/43T2

USSR/Chemistry - Electrochemistry Feb 1948
Chemistry - Sulfides, Metallic

"Dissolving Metallic Sulfides Electrochemically," D. M. Chizhikov, Corr Mem, Acad Sci USSR; B. Z. Ustinskiy, Inst Metal imeni A. A. Baykov, Acad Sci USSR, 6 pp

"Izv Akad Nauk SSSR, Otdel Tekh Nauk" No 2

Describes experiments giving methodical study of anode dissolution of synthetic sulfides of copper, nickel, and cobalt in acid electrolyte, and tabulates results.

[redacted] 43T2

APPROVED FOR RELEASE: 06/12/2000 CIA-RDP86-00513R000308920001-8"

"APPROVED FOR RELEASE: 06/12/2000 CIA-RDP86-00513R000308920001-8

CA

Mechanism and kinetics of the oxidation of lead sulfide by oxygen. D. M. Chizhikov, G. S. Frents, and B. Ya. Tratsevitskaya (Inst., Moscow). *Izvest. Akad. Nauk S.S.S.R., Otdel. Tekh. Nauk* 1949, 1352–60.—(1) Thermodynamic calcns. of the free-energy changes and the equil. consts. (with the aid of the data of Kelley) of the reactions (I) $PbS + 2O_2 = PbSO_4$, (II) $PbS + {}^3/_2O_2 = PbO + SO_2$, and (III) $PbS + O_2 = Pb + SO_2$, between 600 and 1200°K., show that these reactions proceed practically to completion even at the lowest partial pressures of O_2; the very high values of the equil. consts. permit no certain conclusion about the predominance of the 1st reaction. Similar calcns. were made for the 3 possible intermediate reactions (IV) $PbS + PbSO_4 = 2Pb + 2SO_2$, (V) $PbS + 2PbO = 3Pb + SO_2$, and (VI) $2Pb + O_2 = 2PbO$. Selected data of log K_p at 600, 800, 1000, and 1200°K., are IV, −16.524, −7.260, −1.980, and 1.498; V −9.873, −4.720, −1.715, and 0.218; VI 2.009, 1.861, 1.298, and 0.927. The close values for IV and V permit no conclusion as to predominance of either of these reactions, which can proceed only if the equil. is displaced through removal of SO_2 from the system. (2) Expts. were run with natural galenite ground to 0.060–0.074 mm. grain size, heated to 700, 800, or 900° in a 450 ml./min. stream of a $N_2 + O_2$ mixt. with 1, 5, 10, 20, and 100% O_2, with direct analyses of the solid phase for $PbSO_4$, Pb, PbS, and PbO by the difference. At 800° and 900°, with 5% O_2, the amt. of PbS decreases, and the amt. of PbO increases with time; the amts. of metallic Pb and of $PbSO_4$ first increase, pass through a max. at about 10 min., then fall; the kinetic curves indicate consecutive reactions, with Pb and $PbSO_4$ as intermediate products. The decrease of $PbSO_4$ is due to reaction IV; the decrease of Pb, to VI. At the lower temp., 700°, the reaction between PbS and O_2 becomes less intense; the fraction of PbS reacted in 30 min. is 18.8%, of which 13.5% corresponds to $PbSO_4$. Reaction IV is equally slowed down. With 10% O_2, at 800° and 900°, the fall of PbS and the increase of PbO become faster; the max. of $PbSO_4$ is masked at 800°, but reappears at 900°. At 700°, the fraction of PbS reacted in 30 min. is 28.18%, of which 9.8% corresponds to $PbSO_4$, and 18.38% to PbO; no metallic Pb is found. With 1% O_2, at 800 and 900°, the rate of consumption of $PbSO_4$ is greater than the rate of its formation, and consequently no $PbSO_4$ is detected; however, at 700°, reaction IV becomes slow, and $PbSO_4$ is found in the product. (3) Expts. with mixts. of galenite with $PbSO_4$, and of galenite with PbO, in a stream of pure N_2, showed reaction IV to be considerably faster than V. Both reactions are accelerated from 700 to 800°. (4) The accumulation of $PbSO_4$ increases with the amt. of O_2 in the gas. In pure O_2, the rate of formation of $PbSO_4$ from PbS is so fast that not enough PbS remains available for reaction IV. For that reason, the amt. of the final product, PbO, is somewhat lower, after 10 min., than with a 20% O_2 gas mixt. (5) The primary reaction is $PbS + O_2 = PbSO_4$; its rate increases with the temp. and with the concn. of O_2. The $PbSO_4$ formed can react further according to IV, and the metallic Pb is oxidized according to VI. Metallic Pb thus appears as an intermediate product; it can be partially reformed through reaction V. Further possible products are the basic sulfates $PbO.PbSO_4$, $2PbO.PbSO_4$, and $3PbO.PbSO_4$, which also can react with PbS.

N. Thon

APPROVED FOR RELEASE: 06/12/2000 CIA-RDP86-00513R000308920001-8"

"APPROVED FOR RELEASE: 06/12/2000 CIA-RDP86-00513R000308920001-8

CHIZHIKOV, D. M.

USSR/Engineering
Bibliography
Metallurgy

Mar 49

PA 45/49T43

"Annotations of Works of Academicians, Corresponding Members of the Academy of Sciences USSR, and Other Scientific Collaborators of the Department of Technical Sciences, Academy of Sciences USSR, Published in 1948" 1 p

"Iz Ak Nauk SSSR, Otdel Tekh Nauk" No 3

In 1948 academicians and candidates submitted important works in many fields. Some which evoked the most interest were: D. M. Chizhikov's "Metallurgy of Heavy Nonferrous Metals," Volume V of the

45/49T43

USSR/Engineering (Contd) Mar 49

"Engineer's Handbook," "Applied Gas Dynamics," by S. A. Khristianovich, V. G. Gal'perin, et al, and L. A. Melent'yev's "Central Heating."

45/49T43

APPROVED FOR RELEASE: 06/12/2000 CIA-RDP86-00513R000308920001-8"

"APPROVED FOR RELEASE: 06/12/2000 CIA-RDP86-00513R000308920001-8

USSR/Metals - Magnesium, Oxidation of
Metallurgy, Nonferrous

Oct 49

"Interaction of Magnesium With Carbon Monoxide," D. M. Chizhikov, Corr Mem, Acad Sci USSR, Ye. I. Khazanov, A. G. Nikonov, Inst of Metal imeni A. A. Baykov, 8 pp

"Iz Ak Nauk SSSR, Otdel Tekh Nauk" No 10

Discusses experiments for establishing dependence of rate of magnesium oxidation with carbon monoxide on temperature, partial pressure of carbon monoxide, dispersion degree and composition of metallic powder. Describes vacuum installation used for

161T101

[redacted]

USSR/Metals - Magnesium, Oxidation of
(Contd)

Oct 49

experiments and gives some practical conclusions, useful in condensation of metallic magnesium from gas mixture obtained in process of producing magnesium by carbon-thermal method.

161T101

[redacted]

CHIZHIKOV, D. M.

APPROVED FOR RELEASE: 06/12/2000 CIA-RDP86-00513R000308920001-8"

"APPROVED FOR RELEASE: 06/12/2000 CIA-RDP86-00513R000308920001-8

Oct 49

USSR/Metals - Alloys, Sulfide
Electrochemistry

"Electrochemical Dissolving of Sulfide Alloys," D. M. Chizhikov, Corr Mem, Acad Sci USSR, B. Z. Ustinskiy, Inst of Metal imeni A. A. Baykov, 11 pp

"Iz Ak Nauk SSSR, Otdel Tekh Nauk" No 10

Describes conditions and results of electrochemical dissolving of copper-nickel and multimetallic sulfide alloys. Concludes, on basis of experimental data and analysis of phase diagram, that most complete solution of copper-nickel alloy is attained

161T102

[redacted]

USSR/Metals - Alloys, Sulfide (Contd) Oct 49

when latter consists of the eutectic or the crystals of nickel sulfide and eutectic.

161T102

CHIZHIKOV, D. M.

[redacted]

APPROVED FOR RELEASE: 06/12/2000 CIA-RDP86-00513R000308920001-8"

"APPROVED FOR RELEASE: 06/12/2000 CIA-RDP86-00513R000308920001-8

FA 159T10

USSR/Engineering - Metallurgy Nov 49
Oxides, Sulfidizing

"Sulfidizing Metal Oxides With Sulfur Vapors," D. M. Chizhikov, Corr Mem, Acad Sci USSR, R. M. Serebryanaya, Inst of Metal imeni A. A. Baykov, Acad Sci USSR, 6 pp

"Iz Ak Nauk SSSR, Otdel Tekh Nauk" No 11

Describes experiments for sulfidizing magnetite, ferric oxide, siderite, nickelous oxide, and cuprous oxide. Suggests improvement of oxide-sulfidizing process by blowing sulfur-containing materials through tuyeres, thus increasing sulfur

159T10

USSR/Engineering - Metallurgy (Contd) Nov 49

vapor concentration in gases, a factor which has a favorable effect on extraction of metals from ores.

CHIZHIKOV, D. M.

159T10

APPROVED FOR RELEASE: 06/12/2000 CIA-RDP86-00513R000308920001-8"

"APPROVED FOR RELEASE: 06/12/2000 CIA-RDP86-00513R000308920001-8

CA

4

Potentials of metal sulfides and their alloys. B. Z. Ustinskii and D. M. Chizhikov (Acad. Sci. U.S.S.R.). *Zhur. Prikkl. Khim.* (J. Applied Chem.) 22, 1249-52 (1949).— In the absence of current, the following potentials (on the H scale) were measured, in H_2SO_4 100 g./l., and in a 1 *N* soln. of the sulfate of the corresponding metal: Cu_2S 0.444 and 0.520 v.; Ni_3S_2, 0.202 and 0.235; ZnS, 0.140 and 0.145; alloy $Cu_2S.Ni_3S_2$ (1:1) 0.480 and 0.595 (in $CuSO_4$), 0.470 (in $NiSO_4$); $Cu_2S.Ni_3S_2$ (3:1) 0.520 and 0.580 (in $CuSO_4$), 0.440 (in $NiSO_4$). In anodic polarization with 400 amp./sq. m., the potentials increase strongly with time; thus, after 15 min. and 4 hrs., Cu_2S, 1.45 and 1.70, Ni_3S_2 1.45 and 1.50, $Cu_2S.Ni_3S_2$ (1:1) 0.80 and 1.63, $Cu_2S.Ni_3S_2$ (3:1) 0.85 and 1.75 v. The strong anodic passivation is due to the formation of a S film; when this is scraped off, the potentials after 4 hrs. fell to, resp., 0.82, 0.84, 0.75, and 0.70 v. N. Thon

APPROVED FOR RELEASE: 06/12/2000 CIA-RDP86-00513R000308920001-8"

"APPROVED FOR RELEASE: 06/12/2000 CIA-RDP86-00513R000308920001-8

USSR

Electrolysis of nickel sulfate in a cell with a nonfiltering diaphragm. D. M. Chizhikov and B. Z. Ustinskii. *Zhur. Prikład. Khim.* 22, 1303-8(1949).—Electrolysis of $NiSO_4$ was carried out at 45–50° in a cell consisting of 2 concentric ceramic, unglazed cups with a Ni cathode and a Pb anode in the central and outside cups. The anolyte contained Na_2SO_4 + 10–80 g./l. H_2SO_4; the catholyte $NiSO_4$ + H_3BO_3 + KCl + variable concns. of H_2SO_4. With 40–60 g./l. H_2SO_4 in the anolyte, diffusion was sufficient to maintain acidity in the catholyte const.; otherwise it was made up by the circulation of a neutral or slightly acid soln. of $NiSO_4$ + H_3BO_3. Dense deposits of Ni were obtained from solns. of 3 g./l. H_2SO_4 with a c.d. of 250 amp./sq. m. and a current efficiency of 60–70%. The last was somewhat higher with 500–1000 than with 250 amp./sq.m. from a soln. contg. 12–15 g./l. H_2SO_4. J. Boncowitz

(1)

62

APPROVED FOR RELEASE: 06/12/2000 CIA-RDP86-00513R000308920001-8"

"APPROVED FOR RELEASE: 06/12/2000 CIA-RDP86-00513R000308920001-8

USSR/Metals - Cementation Mar 50
Cobalt

"Cementation of Cobalt From Aqueous Solutions With Metallic Zinc," D. M. Chizhikov, Corr Mem, Acad Sci USSR, B. P. Kreingauz, Inst of Metal imeni A. A. Baykov, 7 pp

"Iz Ak Nauk SSSR, Otdel Tekh Nauk" No 3

Investigations of cementation of cobalt from its sulfate solution (one gram of metal per liter) demonstrated that by raising temperature from 50 to 96° and increasing concentration of cabalt to 3 grams per liter, process of cobalt separation may be accelerated. Presence of nickel in solution has negative effect on cementation process. Separation of cobalt from

[redacted] 158T71

USSR/Metals - Cementation (Contd) Mar 50

nickel by cementation on zinc is possible only in the case when cobalt concentration in solution exceeds nickel concentration by two or more times.

[redacted] 158T71

CHIZHIKOV, D. M.

APPROVED FOR RELEASE: 06/12/2000 CIA-RDP86-00513R000308920001-8"

"APPROVED FOR RELEASE: 06/12/2000 CIA-RDP86-00513R000308920001-8

CHIZHIKOV D. M.

181T78

USSR/Metals - Cadmium Dec 50

"Oxidation Mechanism of Cadmium Sulfide," D. M. Chizhikov, Corr Mem, Acad Sci USSR, G. S. Frents, B. Ya. Tratsevitskaya, Inst of Metallurgy imeni A. A. Baykov.

"Iz Ak Nauk SSSR, Otdel Tekh Nauk" No 12, pp 1815-1826

Studies oxidation rate of cadmium sulfide and mech of reactions in roasting sulfide concs to obtain heavy nonferrous metals. Process may be represented by series of parallel and successive

181T78

USSR/Metals - Cadmium (Contd) Dec 50

reactions. Gives results of thermodynamic calcns for primary and secondary reactions. Expts conducted at 300-800°C.

181T78

APPROVED FOR RELEASE: 06/12/2000 CIA-RDP86-00513R000308920001-8"

"APPROVED FOR RELEASE: 06/12/2000 CIA-RDP86-00513R000308920001-8

CHIZHIKOV, D. M.

184T93

USSR/Metals - Cadmium Jan 51

"On the Interaction of Cadmium With Carbon Oxides," D. M. Chizhikov, Corr Mem, Acad Sci USSR, Ye. I. Khazanov, A. G. Nikonov, Inst Metallurgy imeni A. A. Baykov, Acad Sci USSR

"Iz Ak Nauk SSSR, Otdel Tekh Nauk" No 1, pp 68-73

Showed that Cd is not oxidized with C oxides at temp above its bp (768°). Oxidation with CO occurs below 350° and oxidation with CO_2 is noticeable only near Cd mp (319°). Low rates of oxidation of Zn and Cd with C oxides suggest possibility of fractional condensation of vapors of Zn

184T93

USSR/Metals - Cadmium (Contd) Jan 51

and Cd from their mixt with CO in obtaining metal by distillation.

184T93

APPROVED FOR RELEASE: 06/12/2000 CIA-RDP86-00513R000308920001-8"

"APPROVED FOR RELEASE: 06/12/2000 CIA-RDP86-00513R000308920001-8

CHIZHIKOV, D. M., (Corr Mb Acad Sci USSR)

USSR/Metallurgy - Copper Sulfide Ores, Roasting Apr 53

"Mechanism of Oxidizing Copper Sulfide with Oxygen," D. M. Chizhikov, Corr Mb Acad Sci USSR, G. S. Frents, B. Ya. Tratsevitskaya

Iz Ak Nauk, OTN, No 4, pp 523-532

Discusses two stages of investigation conducted at Inst of Metallurgy, Acad Sci USSR, namely: thermodynamic calcns of reactions occurring in process of oxidation of copper sulfides, and exptl investigation into oxidation of copper sulfide depending on temp changes and O concn in gaseous phase.

276T44

APPROVED FOR RELEASE: 06/12/2000 CIA-RDP86-00513R000308920001-8"