"APPROVED FOR RELEASE: 07/19/2001 CIA-RDP86-00513R000514510017-7

L 19045-65 EWT(1)/EWG(k)/EPA(sp)-2/EPA(w)-2/EEC(t)/T/EEC(b)-2/EWA(m)-2 Po-4/Pi-4/Pz-6/Pab-10 AEDC(b)/AFETR/ASD(p)-3/RAEM(a)/SSD(b)/AFWL/ESD(gs)/IJP(c) AT
ACCESSION NR: AP5000307 S/0056/64/047/005/1631/1643

AUTHOR: Baby*kin, M. V.; Gavrin, P. P.; Zavoyskiy, Ye. K.; Rudakov, L. I.; Skoryupin, V. A.

TITLE: Stability of a turbulently heated plasma during adiabatic compression

SOURCE: Zhurnal eksperimental'noy i teoreticheskoy fiziki, v. 47, no. 5, 1964, 1631-1643

TOPIC TAGS: plasma confinement, plasma diffusion, bremsstrahlung, adiabatic trap, plasma trapping, plasma heating

ABSTRACT: This is a continuation of a series of earlier investigations by the authors (1961 Salzburg Conference, paper No. 209; ZhETF v. 43, 411, 1547, 1976, 1962 and v. 46, 511, 1964). The present paper reports on experiments on adiabatic compression of turbulently heated plasma and investigations of its stability, diffusion

Card 1/4

APPROVED FOR RELEASE: 07/19/2001 CIA-RDP86-00513R000514510017-7"

"APPROVED FOR RELEASE: 07/19/2001 CIA-RDP86-00513R000514510017-7

L 19045-65
ACCESSION NR: AP5000307

transversely to the magnetic field, and bremsstrahlung. The experimental setup is illustrated in Fig. 1 of the enclosure. The maximum compression magnetic field was 9 kOe, with a half-cycle duration 2.5 msec. The results have led to the following conclusions: 1. Turbulent heating together with adiabatic compression is an effective means of obtaining a dense high-temperature plasma with relatively low coefficients of magnetic compression. 2. This plasma was fully stable in a mirror trap for ~2 msec. The hot plasma occupied the volume of a cylinder coaxial with the magnetic field of the trap. The stability is due to the presence of cold plasma, and the amount of cold plasma obtained by ionization of the residual neutral gas by fast electrons is sufficient for the stabilization. 3. The upper limit of the velocity of hydrogen plasma transverse to the magnetic field, determined by the measurement accuracy, is 2 m/sec at $T_e \approx 10$ keV and $n \approx 2 \times 10^{13}$ cm^{-3}. The electron temperature, determined from the bremsstrahlung radiated from the volume of the plasma is ~30 keV at the density of $\sim 2 \times 10^{13}$ cm^{-3}. "The

Card 2/4

APPROVED FOR RELEASE: 07/19/2001 CIA-RDP86-00513R000514510017-7"

"APPROVED FOR RELEASE: 07/19/2001 CIA-RDP86-00513R000514510017-7

L 19045-65
ACCESSION NR: AP5000307

8

authors thank L. V. Groshev, A. M. Demidov, G. V. Sholin, L. V. Korablev, A. V. Gordeyev, and D. D. Ryutov for useful advice and V. K. Voytovetskiy for providing a scintillator to register the bremsstrahlung. The authors thank also A. I. Gorlanov for help in preparing and carrying out the experiments." Orig. art. has: 9 figures and 3 formulas.

ASSOCIATION: none

SUBMITTED: 24Apr64 ENCL: 01 SUB CODE: ME

NO REF SOV: 007 OTHER: 001 ATD PRESS: 3157

Card 3/4

APPROVED FOR RELEASE: 07/19/2001 CIA-RDP86-00513R000514510017-7"

"APPROVED FOR RELEASE: 07/19/2001 CIA-RDP86-00513R000514510017-7

L 19045-65
ACCESSION NR: AP5000307 ENCLOSURE: 01

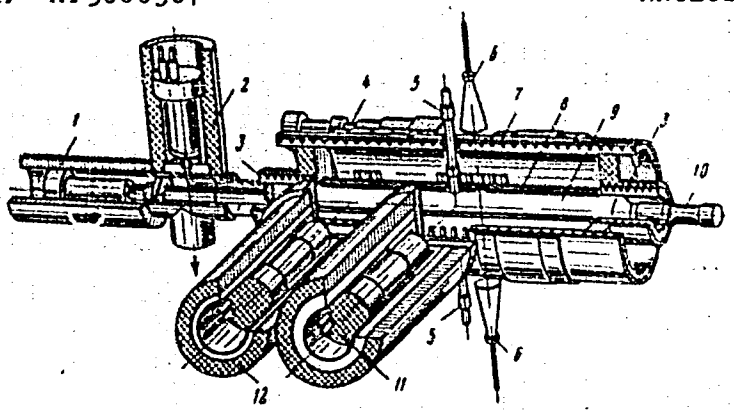

Fig. 1. Experimental setup

1, 2 - Longitudinal x-ray probes; 3 - magnetic-mirror coils; 4 - monochromator with photomultiplier; 5 - ion probes; 6 - microwave probes; 7 - coil for adiabatic compression; 8 - high-frequency shock excitation circuit; 9 - vacuum chamber; 10 - plasma injector; 11 - scintillation counter with collimator; 12 - monitoring scintillation counter.

Card 4/4

APPROVED FOR RELEASE: 07/19/2001 CIA-RDP86-00513R000514510017-7"

"APPROVED FOR RELEASE: 07/19/2001 CIA-RDP86-00513R000514510017-7

GAVRIN, V.F.; DONAUROV, S.S.

Wolves in the Byalovezhska Pushcha. Zool.zhur. 33 no.4:904-924 Jl-Ag '54. (MIRA 7:8)

1. Glavnoye upravleniye po zapovednikam i okhotnich'yemu khozyaystvu Ministerstva sel'skogo khozyaystva SSSR.
(Byalovezhska Pushcha--Wolves) (Wolves--Byalovezhska Pushcha)

APPROVED FOR RELEASE: 07/19/2001 CIA-RDP86-00513R000514510017-7"

"APPROVED FOR RELEASE: 07/19/2001 CIA-RDP86-00513R000514510017-7

GAVRIN, V. F.

GAVRIN, V. F. --"The Ecology of Grouse-Family Birds of the Belovezha Forest." Alma-Ata, 1956. (Dissertation for the Degree of Candidate in Biological Sciences).

So: Knizhnaya letopis', No 8, 1956, pp 97-103

APPROVED FOR RELEASE: 07/19/2001 CIA-RDP86-00513R000514510017-7"

"APPROVED FOR RELEASE: 07/19/2001 CIA-RDP86-00513R000514510017-7

GAVRIN, V.F. (Alma-Ata)

Unusual snowfall. Priroda 45 no.5:125 My '56. (MLRA 9:8)

1. Institut zoologii Akademii nauk Kazakhskoy SSR.
(Byalovezhska Pushcha--Snow)

APPROVED FOR RELEASE: 07/19/2001 CIA-RDP86-00513R000514510017-7"

"APPROVED FOR RELEASE: 07/19/2001 CIA-RDP86-00513R000514510017-7

GAVRIN, V.F.; DATSKEVICH, V.A.

Ecology of the shrike Lanius cristatus collurio L. in the Byalovezhska Pushcha [with summary in English]. Zool. zhur. 37 no.7:1082-1090 Jl '58. (MIRA 11:9)

1.Gosudarstvennyy zapovednik "Belovezhskaya pushcha."
(Byalovezhska Pushcha--Shrikes)

APPROVED FOR RELEASE: 07/19/2001 CIA-RDP86-00513R000514510017-7"

"APPROVED FOR RELEASE: 07/19/2001 CIA-RDP86-00513R000514510017-7

GAVRIN, V.F., RAKOV, N.V.

Material on a study of the spring passage of water birds through the upper course of the Argun' River. Migr.zhiv. no.1:59-66 '59. (MIRA 13:6)

1. Kafedra zoologii i okhotovedeniya Urkutskogo sel'khozinstituta.
(Argun' Valley--Water birds) (Birds--Migration)

APPROVED FOR RELEASE: 07/19/2001 CIA-RDP86-00513R000514510017-7"

"APPROVED FOR RELEASE: 07/19/2001 CIA-RDP86-00513R000514510017-7

GAVRIN, V.F.; RAKOV, N.V.

Materials on the study of spring migration of water birds along the upper course of the Argun' River. Migr. zhiv. no. 2:146-174 '60. (MIRA 13:12)

1. Zoologicheskiy institut AN Kazakhskoy SSR.
(Argun' Valley--Water birds) (Birds--Migration)

APPROVED FOR RELEASE: 07/19/2001 CIA-RDP86-00513R000514510017-7"

"APPROVED FOR RELEASE: 07/19/2001 CIA-RDP86-00513R000514510017-7

GAVRIN, V.F.

Ecology of the pintail in Kazakhstan. Trudy Inst. zool. AN Kazakh. SSR 24:5-58 '64. (MIRA 17:12)

APPROVED FOR RELEASE: 07/19/2001 CIA-RDP86-00513R000514510017-7"

"APPROVED FOR RELEASE: 07/19/2001 CIA-RDP86-00513R000514510017-7

GAVRIN, V.F.; CHAKMENEV, D.I. [deceased]

Mass molting of the crane in Lake Selety-Teniz. Trudy Inst. zool. AN Kazakh. SSR 24:59-64 '64.

(MIRA 17:12)

APPROVED FOR RELEASE: 07/19/2001 CIA-RDP86-00513R000514510017-7"

"APPROVED FOR RELEASE: 07/19/2001 CIA-RDP86-00513R000514510017-7

SUKHORUKOV, I.F.; BABENKO, E.M.; GAVRINA, M.V.

Surface phenomena at the boundary between a carbon material and coal tar pitch. TSvet.met. 38 no.3:65-68 Mr '65. (MIRA 18:6)

APPROVED FOR RELEASE: 07/19/2001 CIA-RDP86-00513R000514510017-7"

"APPROVED FOR RELEASE: 07/19/2001 CIA-RDP86-00513R000514510017-7

S/079/60/030/05/12/074
B005/B002

AUTHORS: Yevstigneyeva, R. P., Gavrina, N. K., Preobrazhenskiy, N. A.

TITLE: Investigations in the Series of Isoquinoline Compounds. XVII. Synthesis of 4',5'-Dimethoxy-7-(1"-methyl-6",7"-dimethoxytetrahydroisoquinolyl)-3,4,5,6,7,8-hexahydrobenz-(1,2:1',2')-quinolizine, or C-Noremetine

PERIODICAL: Zhurnal obshchey khimii, 1960, Vol. 30, No. 5, pp. 1454-1458

TEXT: C-Noremetine differs from the alkaloid emetine by the absence of the ethyl group on C_6. The authors made use of the scheme of emetine synthesis to work out a procedure for the synthesis of C-noremetine (formula VI), in order to be able to draw comparisons between end products and intermediate products obtained in different ways. These comparisons are important for the clarification of certain problems of stereoisomerism of the natural alkaloid emetine. The synthesis worked out runs along the following scheme:

Card 1/5

APPROVED FOR RELEASE: 07/19/2001 CIA-RDP86-00513R000514510017-7"

"APPROVED FOR RELEASE: 07/19/2001 CIA-RDP86-00513R000514510017-7

Investigations in the Series of Isoquinoline Compounds. XVII. Synthesis of 4',5'-Dimethoxy-7-(1"-methyl-6",7"-dimethoxytetrahydroisoquinolyl)-3,4,5,6,7,8-hexahydrobenz-(1,2:1',2')-quinolizine, or C-Noremetine

S/079/60/030/05/12/074
B005/B002

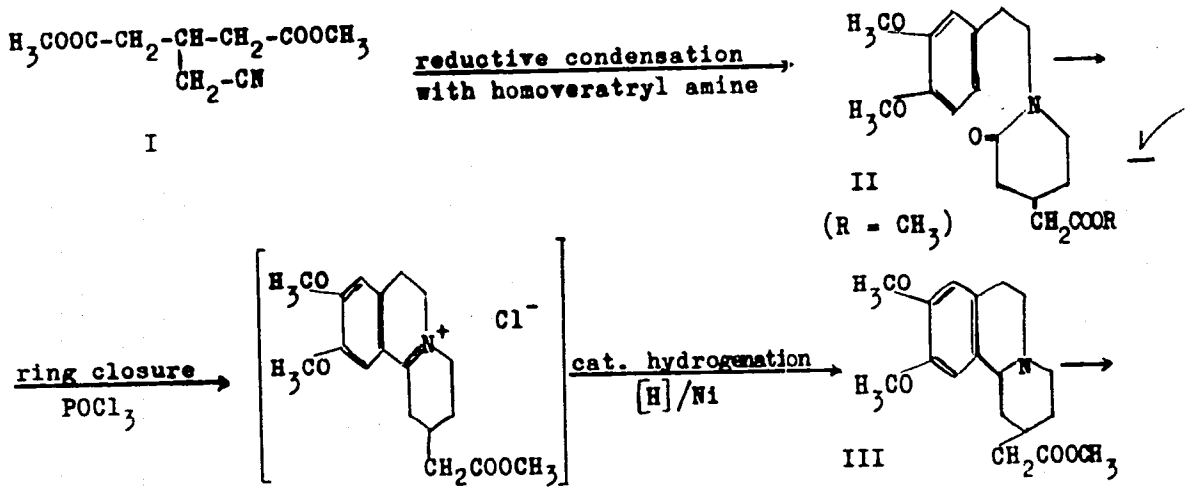

Card 2/5

APPROVED FOR RELEASE: 07/19/2001 CIA-RDP86-00513R000514510017-7"

"APPROVED FOR RELEASE: 07/19/2001 CIA-RDP86-00513R000514510017-7

Investigations in the Series of Isoquinoline Compounds. XVII. Synthesis of 4',5'-Dimethoxy-7-(1"-methyl-6",7"-dimethoxytetrahydroiso-quinolyl)-3,4,5,6,7,8-hexahydrobenz-(1,2:1',2')-quinolizine, or C-Noremetine

S/079/60/030/05/12/074
B005/B002

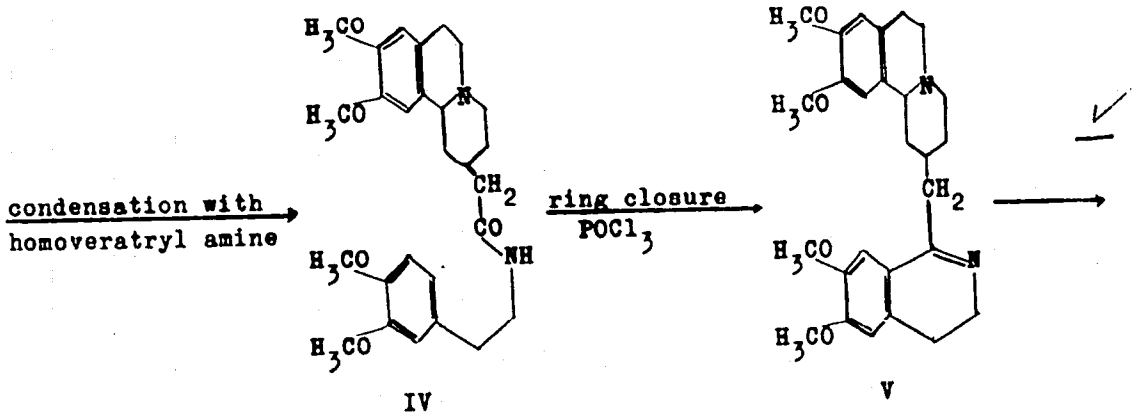

Card 3/5

APPROVED FOR RELEASE: 07/19/2001 CIA-RDP86-00513R000514510017-7"

"APPROVED FOR RELEASE: 07/19/2001 CIA-RDP86-00513R000514510017-7

Investigations in the Series of Isoquinoline Compounds. XVII. Synthesis of 4',5'-Dimethoxy-7-(1"-methyl-6",7"-dimethoxytetrahydroiso-quinolyl)-3,4,5,6,7,8-hexahydrobenz-(1,2:1',2')-quinolizine, or C-Noremetine

S/079/60/030/05/12/074
B005/B002

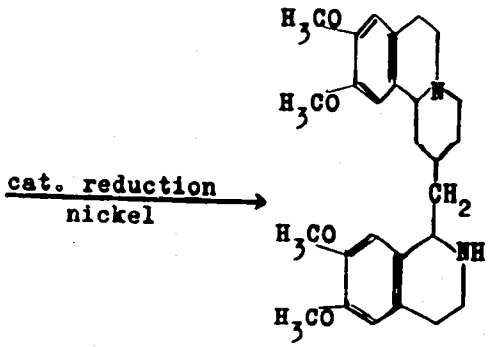

VI

Card 4/5

APPROVED FOR RELEASE: 07/19/2001 CIA-RDP86-00513R000514510017-7"

"APPROVED FOR RELEASE: 07/19/2001 CIA-RDP86-00513R000514510017-7

Investigations in the Series of Isoquinoline Compounds. XVII. Synthesis of 4',5'-Dimethoxy-7-(1"-methyl-6",7"-dimethoxytetrahydroisoquinolyl)-3,4,5,6,7,8-hexahydrobenz-(1,2:1',2')-quinolizine, or C-Noremetine

S/079/60/030/05/12/074
B005/B002

Compound I was obtained by selective saponification and decarboxylation of the methyl ester of β-(cyano-, carbethoxy)-methyl glutaric acid, which is an intermediate product in the synthesis of emetine (Ref. 5). An experimental part describes in great detail the procedure followed in the synthesis. Yields and characteristic data concerning the intermediate products are given for each stage of synthesis. There are 5 references: 2 Soviet, 1 English, and 2 German.

ASSOCIATION: Moskovskiy institut tonkoy khimicheskoy tekhnologii (Moscow Institute of Fine Chemical Technology)

SUBMITTED: June 2, 1959

Card 5/5

APPROVED FOR RELEASE: 07/19/2001 CIA-RDP86-00513R000514510017-7"

"APPROVED FOR RELEASE: 07/19/2001 CIA-RDP86-00513R000514510017-7

TA 75137

GAVRIPENKO, V. S.

USSR/Engineering May 1948
Furnaces, Gas
Fuel Conservation

"Gas Flameless Heating in Factory Furnaces," V. S. Gavripenko, 2 pp

"Prom Energet" No 5

Describes subject furnace with aid of two sectional elevations. Attempts to show by means of numerical examples that operating costs are lower than those of an electric furnace.

75137

APPROVED FOR RELEASE: 07/19/2001 CIA-RDP86-00513R000514510017-7"

"APPROVED FOR RELEASE: 07/19/2001 CIA-RDP86-00513R000514510017-7

GAVRIS', G.A.

Prospects for pine tapping in the Ukraine. Gidroliz. i lesokhim. prom. 17 no.3:28-29 '64. (MIRA 17:9)

1. Ukrgiprolesdrevprom.

APPROVED FOR RELEASE: 07/19/2001 CIA-RDP86-00513R000514510017-7"

"APPROVED FOR RELEASE: 07/19/2001 CIA-RDP86-00513R000514510017-7

COUNTRY : USSR

CATEGORY : General and Specialized Zoology. Insects. Harmful Insects and Acarids. P

ABS. JOUR. : RZhBiol., No.23, 1958, No.105335

AUTHOR : Gusev, V. I., Gavris, V. A.

INST. : -

TITLE : Spindle Tree Snout Moth Alisca angustella Hb. (Lepidoptera Pyralidae) - A Pest of Spindle Tree Seeds.

ORIG. PUB. : Zool. zh., 1957, 36, No. 10, 1580-1583

ABSTRACT : In Ukraine, the snout moth produces two generations. The flight of the first generation lasts up to 2 weeks from the end of May. In 7-16 days caterpillars emerge from the eggs deposited on the set fruits and gnaw into the fruit. Up to 4 caterpillars feed on the seeds in the boll. Pupation takes place in the litter starting with the last 10 days of July. The flight of the II generation lasts from the end of July to the 2nd half of August. The caterpillars of the II generation appear in August-September and later. Pupation takes place in white cocoons in the soil at the depth of to 5 cm. Most severely injured are the fruits of

Card: 1/2

APPROVED FOR RELEASE: 07/19/2001 CIA-RDP86-00513R000514510017-7"

"APPROVED FOR RELEASE: 07/19/2001 CIA-RDP86-00513R000514510017-7

GAVRISH, A.; ABDULKHAKIMOV, Shamsudin

Members of the All-Union Volunteer Society for Assistance to the Army, Airforce, and Navy organize the use of equipment on collective farms. Za rul. 16 no. 5:2-4 My '58. (MIRA 11:7)

1. Predsedatel' komiteta pervichnoy organizatsii Dobrovol'nogo obshchestva sodeystviya armii, aviatsii i flotu kolkhoza imeni V.I.Lenina(for Gavrish). 2. Predsedatel' pervichnoy organizatsii Dobrovol'nogo obshchestva sodeystviya armii, aviatsii i flotu kolkhoza "Leningrad," Stalinabadskiy rayon, Tadzhikskaya SSR(for Abdulkhakimov).

(Collective farms)

APPROVED FOR RELEASE: 07/19/2001 CIA-RDP86-00513R000514510017-7"

"APPROVED FOR RELEASE: 07/19/2001 CIA-RDP86-00513R000514510017-7

S/893/61/000/005/004/005
B117/B186

AUTHORS: Vishnevskiy, I. I., Sukharevskiy, B. Ya., Gavrish, A. M.

TITLE: Method of quantitative phase analysis applied to ZrO_2 using the diffractometer of type УРС-50И (URS-50I)

SOURCE: Kharkov. Ukrayins'kyi naukovodoslidchyi instytut vohnetryviv. Sbornik nauchnykh trudov, no. 5(52), 1961, 315-323

TEXT: A special method of quantitative phase analysis of ZrO_2 was developed using the diffractometer, type УРС-50И (URS-50I) which eliminates the background in x-ray pictures. The annular shape of the standard specimen makes it possible to keep the illumination of the test specimen permanently constant, even if the cross section of the primary beam is inhomogeneous. The percentage content of monoclinic and cubic phases is determined with the aid of a calibrating curve $c_x = f(I_x/I_{stand})$. It has been shown that, irrespectively of the lattice distortion of the specimen

Card 1/2

APPROVED FOR RELEASE: 07/19/2001 CIA-RDP86-00513R000514510017-7"

"APPROVED FOR RELEASE: 07/19/2001 CIA-RDP86-00513R000514510017-7

and its grain size ($< 60\mu$), the amount of the monoclinic modification can be determined from calibration curves for a specimen burnt at 800°C with a grain size of $< 60\mu$. Separate calibration curves have to be constructed for determining the cubic modification according to the stabilizing addition used. To determine the phase composition of ZrO_2 it is, therefore, easier to use the diagram for the monoclinic modification. In the determination of the concentration by the method suggested, the absolute error is 1.2-5%. There are 5 figures and 2 tables.

APPROVED FOR RELEASE: 07/19/2001 CIA-RDP86-00513R000514510017-7"

"APPROVED FOR RELEASE: 07/19/2001 CIA-RDP86-00513R000514510017-7

SUKHAREVSKIY, B.Ya.; VISHNEVSKIY, I.I.; GAVRISH, A.M.

Disintegration of solid solutions in the ZrO - CaO system. Dokl. AN SSSR 140 no.4:884-887 O '61. (MIRA 14:9)

1. Predstavleno akademikom N.V.Belovym.
(Zirconium oxide) (Calcium oxide) (Solutions, Solid)

APPROVED FOR RELEASE: 07/19/2001 CIA-RDP86-00513R000514510017-7"

"APPROVED FOR RELEASE: 07/19/2001 CIA-RDP86-00513R000514510017-7

VISHNEVSKIY, I.I.; GAVRISH, A.M.; SUKHAREVSKIY, B.Ya.

Study of the stabilization and destabilization processes of the cubic modification ZrO_2. Rent. min. syr. no.2:3-4 '62. (MIRA 16:11)

1. Ukrainskiy nauchno-issledovatel'skiy institut ogneuporov.

APPROVED FOR RELEASE: 07/19/2001 CIA-RDP86-00513R000514510017-7"

"APPROVED FOR RELEASE: 07/19/2001 CIA-RDP86-00513R000514510017-7

BEREZHNOY, A.S.; GUL'KO, N.V. [Hul'ko, N.V.]; GAVRISH, A.M. [Havrysh, A.M.]

Solid solutions in the system $MgCr_2O_4$-Mg_2TiO_4, $CaTiO_3$-$CaZrO_3$ and $Cr_2Ti_2O_7$-$CaZrTi_2O_7$. Dop. AN URSR no. 12:1614-1617 '64.

1. Ukrainskiy institut ogneuporov. 2. Chlen-korrespondent AN UkrSSR (for Berezhnoy).

APPROVED FOR RELEASE: 07/19/2001 CIA-RDP86-00513R000514510017-7"

"APPROVED FOR RELEASE: 07/19/2001 CIA-RDP86-00513R000514510017-7

SUKHAREVSKIY, B. Ya.; GAVRISH, A. M.

Special features of the polymorphic transformation of cristobalite. Dokl. AN SSSR 155 no. 2:438-441 Mr '64. (MIRA 17:5)

1. Ukrainskiy nauchno-issledovatel'skiy institut ogneuporov. Predstavleno akademikom N. V. Belovym.

APPROVED FOR RELEASE: 07/19/2001 CIA-RDP86-00513R000514510017-7"

"APPROVED FOR RELEASE: 07/19/2001 CIA-RDP86-00513R000514510017-7

SUKHAREVSKIY, B.Ia.; ALAPIN, B.G.; GAVRISH, A.M.

Characteristics of the kinetics of polymorphic transformation of zirconium dioxide on cooling. Dokl. AN SSSR 156 no. 3: 677-680 '64. (MIRA 17:5)

1. Ukrainskiy nauchno-issledovatel'skiy institut ogneuporov. Predstavleno akademikom N.V.Belovym.

APPROVED FOR RELEASE: 07/19/2001 CIA-RDP86-00513R000514510017-7"

"APPROVED FOR RELEASE: 07/19/2001 CIA-RDP86-00513R000514510017-7

SHKOLREVSKIY, [illegible]; ALAPIN, [illegible]; [illegible], [illegible].

Kinetics and mechanism of the polymorphic conversion of zirconium dioxide. Tzv. AN SSSR. Neorg. mat. [illegible] no [illegible] 1944. 5 '65. (MIRA 18:[illegible])

1. Ukrainskiy nauchno-issledovatel'skiy institut ogneuporov.

APPROVED FOR RELEASE: 07/19/2001 CIA-RDP86-00513R000514510017-7"

"APPROVED FOR RELEASE: 07/19/2001 CIA-RDP86-00513R000514510017-7

L 16587-66 EWT(m)/EPF(n)-2/T/EWP(t)/EWP(b) IJP(c) JD/JG/GS

ACC NR: AP5025790 SOURCE CODE: UR/0363/65/001/009/1537/1544

AUTHOR: Sukharevskiy, B. Ya.; Alapin, B. G.; Gavrish, A. M. 52

ORG: Ukrainian Scientific Research Institute of Refractories (Ukrainskiy nauchno-issledovatel'skiy institut ogneuporov)

TITLE: Kinetics and mechanism of polymorphous transition of zirconium dioxide

SOURCE: AN SSSR. Izvestiya. Neorganicheskiye materialy, v. 1, no. 9, 1965, 1537--1544

TOPIC TAGS: zirconium compound, phase transition, crystal dislocation, crystal defect, physical diffusion, X RAY DIFFRACTION, ACTIVATION ENERGY

ABSTRACT: Certain aspects of the $\alpha \rightleftarrows \beta$ transition in zirconium dioxide, involving the change of the monoclinic phase into the cubic phase at about 1100°C are investigated. The experiments involved the use of x ray diffraction at high temperatures by means of a URS-50I apparatus. X-ray diffraction at low temperatures was performed by using an attachment which permitted quenching in liquid nitrogen and the recording of x-ray at nitrogen temperatures. The polymorphous transition of

Card 1/2 UDC: 546.831.4'221 : 541.7

APPROVED FOR RELEASE: 07/19/2001 CIA-RDP86-00513R000514510017-7"

"APPROVED FOR RELEASE: 07/19/2001 CIA-RDP86-00513R000514510017-7

L 14587-66
ACC NR: AP5025790

ZrO_2 was found to be diffusionless and to take place with isothermal kinetics during the $\alpha \rightarrow \beta$ transition and during the first stage of the $\beta \rightarrow \alpha$ transition. The main reason for isothermal kinetics, at least in the $\beta' \rightarrow \alpha$ transition, are structural defects which cause a diffusion of the lines on the x-ray pattern. Mathematical analysis of the dislocation model of the transition shows the existence of limited isothermal kinetics during which the transition rate is determined by the number of defects preventing the motion of the dislocations and by the activation energy required to overcome them by diffusion. The activation energy of the transition measured (approximately 150 kcal/mol) is close to the activation energy of self-diffusion in ZrO_2. The causes of the increase in the transition range and the decrease in hysteresis following high temperature preliminary annealing of the samples are indicated. Orig. art. has: 6 figures, 15 formulas.

SUB CODE: 11,07/ SUBM DATE: 08Jan65/ ORIG REF: 010/ OTH REF: 013

FW

Card 2/2

APPROVED FOR RELEASE: 07/19/2001 CIA-RDP86-00513R000514510017-7"

"APPROVED FOR RELEASE: 07/19/2001 CIA-RDP86-00513R000514510017-7

GAVRISH, A.P.; CHIZHOV, V.B.

Copying devices are increasing labor productivity. Sbor.st. UZTM no.7:149-170 '58. (MIRA 12:6)
(Machine tools--Numerical control)

APPROVED FOR RELEASE: 07/19/2001 CIA-RDP86-00513R000514510017-7"

"APPROVED FOR RELEASE: 07/19/2001 CIA-RDP86-00513R000514510017-7

GAVRISH, A.P., inzh.

Establishing a program for program controlled machine tools.
Mashinostroenie no.4:16-23 Jl-Ag '62. (MIRA 15:9)
(Machine tools--Numerical control)
(Programming (Electronic computers))

APPROVED FOR RELEASE: 07/19/2001 CIA-RDP86-00513R000514510017-7"

"APPROVED FOR RELEASE: 07/19/2001 CIA-RDP86-00513R000514510017-7

GAVRISH, A.P., inzh.

Approximate calculations for the technological development of a digital program for machine-tool control. Mashinostroenie no.3:3-6 My-Je '63. (MIRA 16:7)

(Electronic digital computers--Programming)
(Machine tools—Numerical control)

APPROVED FOR RELEASE: 07/19/2001 CIA-RDP86-00513R000514510017-7"

"APPROVED FOR RELEASE: 07/19/2001 CIA-RDP86-00513R000514510017-7

GAVRISH, A.P.; IZMAYLOV, N.A., prof., rukoveditel' raboty

Constants of dissociation of some xanthic acids in aqueous solutions. Ukr. khim.zhur. 29 no.9:900-904 '63. (MIRA 17:4)

1. Khar'kovskiy gornyy institut.

APPROVED FOR RELEASE: 07/19/2001 CIA-RDP86-00513R000514510017-7"

"APPROVED FOR RELEASE: 07/19/2001 CIA-RDP86-00513R000514510017-7

LEBEDEV Anatoliy Yakovlevich [Lebedev, A.IA.; GAV[illegible], [illegible] Vasil'yevna [Harvysh, H.V.]; KAL'NITSKIY, R.Ya. [Kal'nyts'kyi, R.IA.], red.

[The intercollective relations are getting stronger] Mitsniiut' mizhkolhospni zv'iazky. Kharkiv, Kharkivs'ke knyzhkove vyd-vo, 1962. [illegible] p. (MIRA [illegible])

APPROVED FOR RELEASE: 07/19/2001 CIA-RDP86-00513R000514510017-7"

"APPROVED FOR RELEASE: 07/19/2001 CIA-RDP86-00513R000514510017-7

1ST AND 2ND ORDERS

3RD AND 4TH ORDERS

PROCESSES AND PROPERTIES INDEX

GAVRISH, D. I.

CA

19

Production of stoppers and ladles at the N. Tagilskii refractory plant. G. T. Bardagov and D. I. Gavrish. *Ogneupory* 10, No. 2-3, 3-11(1945).—Under war conditions the production of stoppers and ladles from Ural raw materials was developed. The manuf. of flint andalusite and grog andalusite ladles made possible the production of high-grade steel products. M. V. Condoide

ASM-SLA METALLURGICAL LITERATURE CLASSIFICATION

APPROVED FOR RELEASE: 07/19/2001 CIA-RDP86-00513R000514510017-7"

"APPROVED FOR RELEASE: 07/19/2001 CIA-RDP86-00513R000514510017-7

GAVRISH, D.I.

C

PROCESSES AND PROPERTIES INDEX

PRODUCTION OF LADLE BRICK WITH NEV'YANSK KAOLIN. D. I. Gavrish and D. P. Zegzhda. Огнеупоры, 13 [3] 99-104 (1948).— An account is given of the experience since 1945 of the Nishne-Tagil'sk refractory plant in the Urals in producing ladle brick with Nev'yansk kaolin. At present the following charge is used: (1) 50% Bal'kinsk clay grog (SiO_2 57.64, Al_2O_3 39.53, and Fe_2O_3 1.55%, refractoriness 1730°C., and water absorption 9.[illegible]); (2) 25% Nishne-Uvel'sk clay (SiO_2 64.36, Al_2O_3 28.72, Fe_2O_3 1.0, ignition loss 4.58%, and refractoriness 1670°). The brick are fired at 1300° and are well sintered because of the high content (4 to 4.5%) of alkali in the kaolin. Characteristics of the brick were as follows: refractoriness 1690°, compressive strength 385 kg./cm.^{2}, apparent porosity 18.5%, and reheat shrinkage (at 1400°) 0.15%. The brick passed a thermal-shock test consisting of 10 cycles of heating at 800°C. for 40 min. and cooling in water with a weight loss less than 20%. Resistance to slag and Mn steel was high; washing out and destruction of the lining occurred chiefly along the seams. B.Z.K.

APPROVED FOR RELEASE: 07/19/2001 CIA-RDP86-00513R000514510017-7"

"APPROVED FOR RELEASE: 07/19/2001 CIA-RDP86-00513R000514510017-7

F61/49T29

USSR/Engineering
Refractories
Furnaces

Dec 48

"Utilization of Waste Heat From Hoffman Furnaces for Drying Fire Clay Articles at the Nizhne-Tagil Refractory Factory," D. I. Gavrish, T. F. Shutenko, F. G. Valenburger, Engineers, 3 pp

"Ogneupory" No 12

In 1945, the two-burner Hoffman furnace at subject plant was converted from solid fuel to gas. Describes system developed to use waste hot air. Furnace services two dryers which have temperatures of 110

61/49T29

USSR/Engineering (Contd)

Dec 48

to 120°. Articles are admitted with an 8 to 9% humidity and emerge with not more than 3% humidity.

61/49T29

APPROVED FOR RELEASE: 07/19/2001 CIA-RDP86-00513R000514510017-7"

"APPROVED FOR RELEASE: 07/19/2001 CIA-RDP86-00513R000514510017-7

GAVRISH, D. I. PA 12/49T63

USSR/Engineering Sep 48
Refractories
Fire Brick

"Chamotte Ladle Articles of the Novo-Tagil'sk Refractory Plant," Ye. S. Chuprinko, Engr, D. I. Gavrish, 3½ pp

"Ogneupory" Vol XIII, No 9

Report of experiments. Concludes that chamotte brick prepared from Ural clays is superior to plastic bricks. Among other advantages they can be fired without preliminary drying. Discusses further refinements in technique.

12/49T63

APPROVED FOR RELEASE: 07/19/2001 CIA-RDP86-00513R000514510017-7"

"APPROVED FOR RELEASE: 07/19/2001 CIA-RDP86-00513R000514510017-7

GAVRISH, D. I.

Improving the quality of Dinas at the Pervoural'sk Works. V. A. Bron, S. S. Bovkun, D. I. Gavrish, and T. S. Ignatova. *Ogneupory*, 15 [2] 51-58 (1950).—To improve the quality of Dinas, particularly for coke ovens, the existing grain composition, which was >5 mm. 0.5 to 1%, 5 to 3 mm. 8 to 12%, <0.5 mm. 40 to 53%, and <0.088 mm. 30 to 35%, was changed to exclude grains of 3 mm. and over. The proposed grain composition allows a residue of not more than 2% on the 3-mm. sieve and a grain size of <0.5 mm. 55 to 60%, including 35 to 40% of <0.088 mm. Fine grain composition increased the compressive strength by 50 to 70 kg./cm.^{2} and the tridymite content by 10%; porosity remained at about 20%, and specific gravity decreased. The external appearance of the Dinas improved sharply. Crumbling and rubbing-out of grains on the edges almost disappeared; roughness of the faces also disappeared, and the networks of cracks on the surface were reduced considerably. Dimensional variations and rejects for this cause were lower. B.Z.K.

APPROVED FOR RELEASE: 07/19/2001 CIA-RDP86-00513R000514510017-7"

"APPROVED FOR RELEASE: 07/19/2001 CIA-RDP86-00513R000514510017-7

KAYNARSKIY, I.S., prof. doktor,; GAVRISH, D.I., inzh.; PINDRIK, B.Ye.; KUDRYAVTSEV, S.N.

Mastering the production of high-density, high-alumina dinas bricks. Ogneupory 19 no. 3:128-135 '54. (MIRA 11:8)

1. Pervoural'skiy dinasovyy zavod i Khar'kovskiy institut ogneuporov. (Firebrick)

APPROVED FOR RELEASE: 07/19/2001 CIA-RDP86-00513R000514510017-7"

"APPROVED FOR RELEASE: 07/19/2001 CIA-RDP86-00513R000514510017-7

SOV/137-58-7-14125

Translation from: Referativnyy zhurnal, Metallurgiya, 1958, Nr 7, p 21 (USSR)

AUTHOR: Gavrish, D. I.

TITLE: New Refractories in Steelmaking (Novyye ogneupornyye materialy v staleplavil'nom proizvodstve)

PERIODICAL: Tr. Nauchno-tekhn. o-va chernoy metallurgii, 1957, Vol 18, pp 119-125

ABSTRACT: The provision of powerful equipment and advanced processes for refractories plants and the increase in manufacture of magnesite-chromite (MC) refractories have had as their result that 90% of the open-hearth steel produced in the plants of the ferrous-metallurgy industry is smelted in furnaces with MC roofs. The maximum life of MC roofs attained in 185-t open hearths has been 752 heats, and in 380-t hearths 561 heats. The production of heat-resistant periclase-spinelide MC of 14% maximum porosity has been mastered. The life of these refractories is 60% higher than that of conventional roof MC. The manufacture of forsterite checkers capable of a service life of as many as 3 campaigns (1495 heats) as roof material in regenerative open hearths after replacement of the 2 or 3

Card 1/2

APPROVED FOR RELEASE: 07/19/2001 CIA-RDP86-00513R000514510017-7"

"APPROVED FOR RELEASE: 07/19/2001 CIA-RDP86-00513R000514510017-7

SOV/137-58-7-14125

New Refractories in Steelmaking

top courses has been organized, as has that of conventional silica brick-and-chromite checkers which have demonstrated a life of 449 heats in the regenerators of 250-t open hearths. Periclase-spinelide linings of converters in which pig iron is top-blown with O_2 have shown a life of 100-150 heats. The service life of MC in the roofs of electric arc steelmaking furnaces is higher by a factor of 2.5-4 than that of conventional silica brick. The production of long-lived refractories of pure ZrO_2, BeO, MgO, CaO, and Ti carbide for induction furnaces making special alloys has been mastered. High-duty fireclay brick capable of withstanding as many as 17 heats (13-heat average) in 185-200-t ladles is the only type being manufactured to line steel pouring ladles. The manufacture of graphite-fireclay brick nozzles for continuous casting of steel and high-alumina stopper rods for ladles in vacuum steel making is being organized.

1. Furnaces--Design 2. Refractory materials--Applications Ya. G.
3. Refractory materials--Temperature factors

Card 2/2

APPROVED FOR RELEASE: 07/19/2001 CIA-RDP86-00513R000514510017-7"

"APPROVED FOR RELEASE: 07/19/2001 CIA-RDP86-00513R000514510017-7

SAMARIN, A.M.; YEFIMOV, L.M.; VESELKOV, N.G.; ORMAN, R.Z.; SHABANOV, A.N.; MOROZENSKIY, L.I.; GRANAT, I.Ya.; TOCHINSKIY, A.S.; ALYAVDIN, V.A.; DANILOV, P.M.; PETRIKEYEV, V.I.; POPOV, B.N.; BOBKOV, T.M.; ROSTKOVSKIY, S.Ye.; GAVRISH, D.I.; D'YAKONOV, N.S.; TIMOSHPOL'SKIY, M.N.; ROMANOV, V.D.; POCHTMAN, A.M.; MELESHKO, A.M.; PODGORETSKIY, A.A.; OFENGENDEN, A.M.; BRONSHTEYN, V.M.; PRIDANTSEV, M.V.; LIVSHITS, G.L.; ROZHKOV, V.A.; RUTES, V.S.

Reports (brief annotations). Biul. TSNIICHM no.18/19:15-16 '57. (MIRA 11:4)

1. Chlen-korrespondent AN SSSR (for Samarin). 2. TSentral'nyy nauchno-issledovatel'skiy institut chernoy metallurgii (for Rutes, Rostkovskiy, Pridantsev, Livshits, Rozhkov). 3. Stal'proyekt (for Shabanov). 4. Kuznetskiy metallurgicheskiy kombinat (for Alyavdin, Danilov, Petrikeyev). 5. Zavod "Elektrostal'" (for Popov). 6. "Dneprospetsstal'" (for Bobkov). 7. Glavogneupor Ministerstva chernoy metallurgii SSSR (for Gavrish). 8. Planovoye upravleniye Ministerstva chernoy metallurgii SSSR (for D'yakonov). 9. Otdel rabochikh kadrov, truda i zarplaty Ministerstva chernoy metallurgii SSSR (for Timoshpol'skiy). 10. Glavvtorchermet Ministerstva chernoy metallurgii SSSR (for Romanov). 11. Giprostal' (for Pochtman). 12. Zavod im. Voroshilova (for Meleshko). 13. Zavod "Zaporozhstal'" (for Podgoretskiy). 14. Stalinskiy metallurgicheskiy zavod (for Ofengenden). 15. Nizhne-Tagil'skiy metallurgicheskiy kombinat (for Bronshteyn).

(Steel—Metallurgy)

APPROVED FOR RELEASE: 07/19/2001 CIA-RDP86-00513R000514510017-7"

"APPROVED FOR RELEASE: 07/19/2001 CIA-RDP86-00513R000514510017-7

GAVRISH, D.I.; GUBKO, I.T.

First Urals dinas brick plant, holder of the Red Banner labor medal, on the eve of the 40th anniversary of the Great October Revolution. Ogneupory 22 no.11:481-483 '57. (MIRA 11:1)
(Ural Mountain region--Refractories industry)

APPROVED FOR RELEASE: 07/19/2001 CIA-RDP86-00513R000514510017-7"

"APPROVED FOR RELEASE: 07/19/2001 CIA-RDP86-00513R000514510017-7

Gavrish, D. I.

25(1) PHASE I BOOK EXPLOITATION SOV/1788

Ogneupory dlya chernoy metallurgii; sbornik statey (Refractories in Ferrous Metallurgy; Collection of Articles) Moscow, Metallurgizdat, 1958. Errata slip inserted. 4,000 copies printed.

Ed.: D. I. Gavrish, Engineer; Ed. of Publishing House: I. P. Kirsanov; Tech. Ed.: A. I. Karasev.

PURPOSE: This book is intended for engineers and technicians working in ferrous metallurgy.

COVERAGE: The book consists of 20 articles on the development and use of refractories in the Soviet metallurgical industry. D. I. Gavrish, in the first paper, presents the prospects for development and research projects for the period 1959-1965. He emphasizes development of refractory plants in the eastern part of the USSR. In general the articles deal with recent developments in basic and acidic refractories for blast and open hearth furnaces, and for the lining of ladles and special equipment used in continuous casting and in vacuum treatment of steel. A. S. Berezhnoy discusses the technology of manufacturing magnesite and forsterite refractories which frequently replace Dinas brick and fire clay. Several authors state that good results were obtained with

Card 1/5

APPROVED FOR RELEASE: 07/19/2001 CIA-RDP86-00513R000514510017-7"

"APPROVED FOR RELEASE: 07/19/2001 CIA-RDP86-00513R000514510017-7

periclase-spinell brick and with bricks made of magnesium and chromite compounds. The application of new refractories, insulating materials, high-temperature mortars, binding media, and cements, combined with advanced techniques in lining furnaces, are said to have more than doubled the time intervals between relining and overhauling furnaces. O. M. Margulis and A. G. Karaulov discuss the use of "tagged atoms" to determine the degree of contamination of steel by refractory-lining particles. N. S. Lesnyak describes the production of refractories by the semidry pressing method employed at the Nizhne-Tagil' plant, and I. S. Kaynarski and V. D. Tsigler cover the use of lightweight Dinas bricks in industrial furnaces. The last paper written by A. N. Makarychev compares and evaluates the physical properties and service life of fire-clay bricks, forsterite bricks, Dinas bricks and bricks with high alumina content. Graphs, diagrams, and photographs accompany the papers. For references, see Table of Contents.

TABLE OF CONTENTS:

Gavrish, D.I. Basic Trends for the Development of Production of High-resistance Refractories for Ferrous Metallurgy, 1959-1965 5

Berezhnoy, A.S. Technology of the Production of Magnesite and Forsterite Refractories [28 Soviet references] 26

APPROVED FOR RELEASE: 07/19/2001 CIA-RDP86-00513R000514510017-7"

"APPROVED FOR RELEASE: 07/19/2001 CIA-RDP86-00513R000514510017-7

Panarin, A. P. Periclase-spinel Brick 38

Frenkel', A. S. High-refractory Products for All-basic Open Hearths and Ways of Increasing Durability [There are 12 references, 9 of which are Soviet, 2 English, 1 German] 55

Pirogov, A.A. Air Setting High-refractory Magnesium Cement [8 Soviet references] 86

Dubrov, N.F., and I. Sh. Shvartsman. Experience With Heat Insulation of the Magnesium Chromite Roof of an Open Hearth Furnace 99

D'yachkov, P.N., and Z.S. D'yachkova. Magnesium Chromite Products for Vacuum Treatment of Transformer Steel in Ladles[5 Soviet references] 114

Uzberg, A.I. Nonfired Magnesite Ladle Liners 122

Glebov, S.V., and L.A. Tikhonova. Lining the Hearth Bottom and the Hearth in Modern Blast Furnaces [There are 25 references, 19 of which are Soviet, 3 English, 2 German, and 1 Polish] 132

APPROVED FOR RELEASE: 07/19/2001 CIA-RDP86-00513R000514510017-7"

"APPROVED FOR RELEASE: 07/19/2001 CIA-RDP86-00513R000514510017-7

Zhikharevich, S.A., and I.A. Getman. Technology of Manufacturing High-density and Dimensionally Stable Alumino-Silicate Refractories for Blast Furnaces Linings.
[There are 13 references, 6 of which are Soviet, and 7 English] 142

Kukolev, G.V., and K.F. Vasil'yeva. Service Life of Ladle Liners for Pouring Steel [13 Soviet references] 162

Rutman, D.S., L.V. Vinogradovova, K.A. Krasotin, and D.B. Min'kov. Heat-resistant High Alumina Ladle-Lining Brick and Stopper Nozzles of Mullite-Corundum Composition [5 Soviet references] 173

Margulis, O.M., and A.G. Kharaulov. The Use of Tagged Atoms to Determine the Effect of Refractory Contamination of Steel With Nonmetallic Inclusions [There are 12 references, 9 of which are Soviet, and 3 English] 178

Lesnyak, N.F. Manufacture of Steel-pouring Devices by the Semidry Pressing Method in the Refractory Shop of the Nizhne-Tagil' Metallurgical Combine and the Results of Practical Application in Metallurgy 186

APPROVED FOR RELEASE: 07/19/2001 CIA-RDP86-00513R000514510017-7"

"APPROVED FOR RELEASE: 07/19/2001 CIA-RDP86-00513R000514510017-7

Strelets, V.M., A.G. Karaulov, and I.S. Zozulya. Refractory Liners for Continuous Casting of Killed Steel [There are 13 references, 8 of which are Soviet, and 5 English] 195

Tseytlin, L.A., and V.P. Rakina. Plasticized Fire Clays and High Alumina Mortars [8 Soviet references] 206

Kaynarskiy, I.S., Improving the Technology of Producing Dinas Refractories for Coke Ovens 216

Kaynarskiy, I.S., and V.D. Tsigler. Use of Lightweight Dinas Brick in the Furnaces [5 Soviet references] 229

Nazarov, M.P. Use of Refractories in Open Hearth Furnaces 245

Makarychev, A.P. Use of Forsterite, Dinas, and Fireclay Bricks With Increased Alumina Content in Checker of Open Hearth Furnaces 268

AVAILABLE: Library of Congress

Card 5/5

GO/fal
7-17-59

APPROVED FOR RELEASE: 07/19/2001 CIA-RDP86-00513R000514510017-7"

"APPROVED FOR RELEASE: 07/19/2001 CIA-RDP86-00513R000514510017-7

GAVRISH, D.I.; LARIN, A.P.; STROFILOV, A.A.

In Austrian refractory plants. Ogneupory 27 no.8:381-386 '62. (MIRA 15:9)

1. Gosplan SSSR (for Gavrish). 2. Vsesoyuznyy institut ogneuporov (for Larin, Strofilov).
(Austria--Refractory materials)

APPROVED FOR RELEASE: 07/19/2001 CIA-RDP86-00513R000514510017-7"

"APPROVED FOR RELEASE: 07/19/2001 CIA-RDP86-00513R000514510017-7

ACC NR: AM5025165 Monograph UR

Gavrish, D. I. (Engineer), ed.

Refractory production; a handbook (Ogneupornoye proizvodstvo; spravochnik), V. 1. [Moscow] Izd-vo "Metallurgiya", 1965, 578 p. illus., biblio. 3,865 copies printed.

TOPIC TAGS: refractory, refractory coating, refractory compound, refractory oxide, refractory product, clay refractory product, nonclay refractory product, concrete

PURPOSE AND COVERAGE: This volume presents data on mining and reserves of refractory raw materials, discusses the physicochemical principles of refractory materials, and describes the technology of manufacture of refractories. It is intended for specialist in the manufacture and application of refractories, as well as for students at institutes offering courses in this field.

TABLE OF CONTENTS [abridged]:

Foreword — 3

Ch. I. Deposits Part 1. Refractory raw materials

Ch. I. Deposits and reserves of refractory raw materials (A. D. Fedoseyev, Professor, Doctor of Technical Sciences) — 5

Card 1/3 UDC: 666.76 (083)

APPROVED FOR RELEASE: 07/19/2001 CIA-RDP86-00513R000514510017-7"

"APPROVED FOR RELEASE: 07/19/2001 CIA-RDP86-00513R000514510017-7

ACC NR: AM5025165

Ch. II. Mining and concentration of refractory raw materials (G. P. Davidyants, Candidate of Technical Sciences) -- 62

Part 2. Physicochemical principles of refractory materials

Ch. III. Physicochemical characteristics of refractory properties (P. S. Mamykin, Professor, Doctor of Technical Sciences) - - 110

Ch. IV. Aspects of modification, polymorphic transformations, and stability range of refractories (P. S. Mamykin, Professor, Doctor of Technical Sciences) - - 142

Ch. V. Phase diagrams of refractory materials (P. S. Mamykin, Professor, Doctor of Technical Sciences) - - 160

Part 3. Manufacture of refractories

Ch. VI. Chamotte, kaolin, and semiacid refractories (K. K. Strelov, Candidate of Technical Sciences; T. S. Ignatova, Candidate of Technical Sciences) - - 202

Ch. VII. Dinas refractories (V. A. Bron, Candidate of Technical Sciences) - - 258

Ch. VIII. Magnesia refractories (P. S. Mamykin, Professor, Doctor of Technical Sciences) - - 300

Ch. IX. Dolomite refractories (G. Z. Dolgina, Candidate of Technical Sciences) - - 364

Ch. X. High-alumina refractories (R. Ya. Popil'skiy, Candidate of Technical Sciences - - 384

Card 2/3

APPROVED FOR RELEASE: 07/19/2001 CIA-RDP86-00513R000514510017-7"

"APPROVED FOR RELEASE: 07/19/2001 CIA-RDP86-00513R000514510017-7

ACC NR: AM5025165

Ch. XI. Carbon and graphite refractories (V. P. Zegzhda, Candidate of Technical Sciences) -- 415
Ch. XII. Highly refractory products made from chemically pure oxides and silicon carbide (V. I. Kushakovskiy, Candidate of Technical Sciences) - - 433
Ch. XIII. Highly refractory materials made from oxygen-free compounds (G. V. Samsonov, Corresponding Member AN UkrSSR) - - 482
Ch. XIV. Light-weight refractories (S. V. Glebov, Professor, Candidate of Technical Sciences) - - 513
Ch. XV. Heat-resistant refractories (Nekrasov, K. D., Professor, Doctor of Technical Sciences; A. P. Tarasova, Candidate of Technical Sciences) - - 530
Ch. XVI. Refractory mortars, mixtures [filler, putty, mix, etc.], and coatings (V. P. Rakina, Candidate of Technical Sciences; L. A. Tseytlin, Candidate of Technical Sciences; B. I. Levitanskiy, Engineer) - - 552

SUB CODE: 11/ SUBM DATE: 08Apr65/ BOV REF: 325/ OTH REF: 053

Card 2/3

APPROVED FOR RELEASE: 07/19/2001 CIA-RDP86-00513R000514510017-7"

"APPROVED FOR RELEASE: 07/19/2001 CIA-RDP86-00513R000514510017-7

ACC NR: AM5025166 Monograph UR

Gavrish, D. I. (Engineer), ed.

Refractory production; a handbook (Ogneupornoye proizvodstvo; spravochnik) v. 2 Moscow, Izd-vo "Metallurgiya", 1965. 583 p. illus., biblio., fold. chart, index. Errata slip inserted. 3,865 copies printed.

TOPIC TAGS: refractory, refractory product, automation, automatic control equipment, roasting furnace, furnace, sintering furnace, laboratory furnace, spectrum analysis, photometric analysis, colorimetric analysis, polarographic analysis

PURPOSE AND COVERAGE: This volume of the handbook describes refractory plant equipment, automatic control of production, application of refractories, methods of analysis, as well as thermal engineering problems. It includes data on refractory plant designs and economics of refractory manufacture. The handbook is intended for specialists in the manufacture and application of refractories, as well as for students at institutes offering courses in this field.

TABLE OF CONTENTS [abridged]:

PART 4. Mechanical and electrical equipment
Ch. XVII. Equipment of refractory plants (A. P. Larin, Engineer) - - 3
Ch. XVIII. Automation in the manufacture of refractories (A. P. Larin, Engineer; V. P. Viktorov, Engineer) - - 144

Card 1/4 UDC: 666.76(038)

APPROVED FOR RELEASE: 07/19/2001 CIA-RDP86-00513R000514510017-7"

"APPROVED FOR RELEASE: 07/19/2001 CIA-RDP86-00513R000514510017-7

ACC NR: AM5025166

Ch. XIX. Drying and calcination of refractories (A. A. Shumilin, Candidate of Technical Sciences) - - 166
Ch. XX. Automatic control and regulation of thermotechnical processes in the industry of refractories (M. M. Frenkel', Engineer; V. Ya. Lavrov, Engineer) - - 231
PART 5. Methods of analysis
Ch. XXI. Technical control of refractory manufacture (K. K. Strelov, Candidate of Technical Sciences) - - 271
Ch. XXII. Modern methods of analysis and control of refractory quality (L. I. Karyakin, Professor, Doctor of Technical Sciences) - - 298
Ch. XXIII. Methods of analysis of the porous structure (the texture) and of the specific surface area of refractories (K. K. Strelov, Candidate of Technical Sciences) - - 308
Ch. XXIV. Methods for the determination of the mechanical and plastic properties of refractories (V. P. Zegzhda, Candidate of Technical Sciences) - - 316
Ch. XXV. Dynamic methods for the determination of the elastic characteristics of refractory materials at normal temperatures (N. G. Khatnyukova, Engineer) - - 325
Ch. XXVI. Methods for the determination of coefficients of heat transfer (V. A. Fedosov, Engineer) - - 329
Ch. XXVII. Thermographic methods of analysis of refractories (L. V. Kozlovskiy, Candidate of Technical Sciences) - - 338
Ch. XXVIII. X-ray methods of analysis (I. V. Yavorskiy, Candidate of Physics and Mathematics) - - 342

Card 2/4

APPROVED FOR RELEASE: 07/19/2001 CIA-RDP86-00513R000514510017-7"

"APPROVED FOR RELEASE: 07/19/2001 CIA-RDP86-00513R000514510017-7

ACC NR: AM5025166

Ch. XXIX. Application of radioactive isotopes and nuclear radiation (I. A. Vasil'yev, Candidate of Chemical Sciences) - - 359
Ch. XXX. Methods of spectrum analysis (O. I. Setkina, Candidate of Chemical Sciences) - - 371
Ch. XXXI. Complexometric, photocolorimetric, and polarographic methods of analysis ((I. A. Kedrinskiy, Candidate of Chemical Sciences) - - 379
Ch. XXXII. Chemical analysis methods for refractories (A. M. Shevyakov, Engineer) -384
Ch. XXXIII. Laboratory furnaces (Yu. N. Vil'k, Engineer) - - 388
PART. 6. Use of refractories
Ch. XXXIV. Use of refractories in cast iron and steel production (M. A. Lifshits, Engineer; D. B. Martsinkovskiy, Engineer; G. G. Aristov, Engineer) - - 406
Ch. XXXV. Use of refractories in coke ovens (I. Sh. Shvartsman, Engineer) - - 466
Ch. XXXVI. Use of refractories in nonferrous metallurgy (M. A. Lur'ye, Candidate of Technical Sciences; B. A. Velikin, Candidate of Technical Sciences; B. I. Levitanskiy, Candidate of Technical Sciences; L. A. Tseytlin, Candidate of Technical Sciences) - - 478
Ch. XXXVII. Use of refractories in the glass manufacturing industry (T. I. Ryakhovskaya, Candidate of Technical Sciences) - - 503
Ch. XXXVIII. Use of refractories in furnaces for the calcination of cement (G. A. Sokhatskaya, Candidate of Technical Sciences) - - 513

Card 3/4

APPROVED FOR RELEASE: 07/19/2001 CIA-RDP86-00513R000514510017-7"

"APPROVED FOR RELEASE: 07/19/2001 CIA-RDP86-00513R000514510017-7

ACC NR: AM5025166

Ch. XXXIX. Use of refractories in boiler units (I. Ya. Zalkind, Candidate of Technical Sciences) - - 527
Ch. XL. Radial lining made of refractory bricks (I. Sh. Shvartsman, Engineer) - - 540

SUB CODE: 11/ SUBM DATE: 29Apr65/ SOV REF: 362/ OTH REF: 045

Card 4/4

APPROVED FOR RELEASE: 07/19/2001 CIA-RDP86-00513R000514510017-7"

"APPROVED FOR RELEASE: 07/19/2001 CIA-RDP86-00513R000514510017-7

GAVRISH, D. K., Engr.; ZBOZHDA, D. T., Engr.

"Production of foundry ladle brick utilizing Nev'yansk Kaolin,"

Ogneupory, No. 3, 1948

APPROVED FOR RELEASE: 07/19/2001 CIA-RDP86-00513R000514510017-7"

"APPROVED FOR RELEASE: 07/19/2001 CIA-RDP86-00513R000514510017-7

GAVRISH, D. M.

Manual of safety measures and industrial hygiene for the food industry and trade. Moskva, Pishchepromizdat, 1949- (50-37875)

TX357.R93

APPROVED FOR RELEASE: 07/19/2001 CIA-RDP86-00513R000514510017-7"

"APPROVED FOR RELEASE: 07/19/2001 CIA-RDP86-00513R000514510017-7

IVANOV, N.A., prof., YEGOROV, G.P., KOVAL', P.I., GAVRISH, I.A. (Leningrad)

Clinical aspects of oleogranulomas caused by injections of cod-liver oil. Vrach.delo no.3:297 Mr'58 (MIRA 11:5)

1. Kafedra koshnykh i venerisheskikh bolezney (nach. - prof. polkovnik meditsinskoy sluzhby S.Ye. Gorbovitskiy) Voyenno-meditsinskoy akademii im. Kirova.
(COD--LIVER OIL)
(TUMORS)

APPROVED FOR RELEASE: 07/19/2001 CIA-RDP86-00513R000514510017-7"

"APPROVED FOR RELEASE: 07/19/2001 CIA-RDP86-00513R000514510017-7

TUKALEVSKAYA, N.I. [Tukalievs'ka, N.I.]; GAVRISH, I.P. [Havrysh, I.P.]

Mechanization of production processes in the Cherkassy Clothing Factory. Leh.prom. no.1:44-45 Ja-Mr '64.
(MIRA 19:1)

APPROVED FOR RELEASE: 07/19/2001 CIA-RDP86-00513R000514510017-7"

"APPROVED FOR RELEASE: 07/19/2001 CIA-RDP86-00513R000514510017-7

GAVRISH, M.

From the work practice of grain procurement stations. Muk.-elev. prom. 24 no.10:17 O '58. (MIRA 11:12)

1.Direktor Serekinskogo khlebopriyemnogo punkta Krasnoyarskogo kraya.

(Grain trade)

APPROVED FOR RELEASE: 07/19/2001 CIA-RDP86-00513R000514510017-7"

"APPROVED FOR RELEASE: 07/19/2001 CIA-RDP86-00513R000514510017-7

GAURISH, M.

Two years of the work of the combined Sorokinsk Grain Receiving Station. Muk.-elev.prom.26 no.5:11-12 My '60. (MIRA 14:3)

1. Direktor Sorokinskogo khlebopriyemnogo punkta.
(Krasnoyarsky Territory--Grain elevators)

APPROVED FOR RELEASE: 07/19/2001 CIA-RDP86-00513R000514510017-7"

"APPROVED FOR RELEASE: 07/19/2001 CIA-RDP86-00513R000514510017-7

GAVRISH, M.

Improve the quality of machinery and equipment sent to grain-receiving stations. Muk.-elev. prom. 27 no.2:30 F '61. (MIRA 14:4)

1. Direktor Sorokinskogo khlebopriyemnogo punkta Krasnoyarskogo upravleniya khleboproduktov.
(Grain-handling machinery)

APPROVED FOR RELEASE: 07/19/2001 CIA-RDP86-00513R000514510017-7"

"APPROVED FOR RELEASE: 07/19/2001 CIA-RDP86-00513R000514510017-7

GAVRISH, M. [Havrysh, M.]

Television station at Vinnitsa. Znan. ta pratsia no.3:20-21 Mr '62. (MIRA 16:7)

(Vinnitsa—Television—Transmitters and transmission)

APPROVED FOR RELEASE: 07/19/2001 CIA-RDP86-00513R000514510017-7"

"APPROVED FOR RELEASE: 07/19/2001 CIA-RDP86-00513R000514510017-7

GAVRISH, M.L.

USSR/ Chemistry - Physical chemistry

Card 1/1 Pub. 22 - 22/49

Authors : Gavrish, M. L., and Galinker, I. S.

Title : Solubility of salts at high temperatures

Periodical : Dok. AN SSSR 102/1, 89-91, May 1, 1955

Abstract : Experiments were conducted to determine the solubility of AgCl, AgBr, AgJ, CuCl, CuBr and CuJ salts at temperatures ranging from 160 to 360°. The results regarding the solubility of the investigated halide salts of monovalent Ag and Cu are given. Six USSR references (1948-1953). Table; drawing.

Institution : The Kharkov Agric. Inst. im. V. V. Dokuchayev

Presented by : Academician I. I. Chernyaev, November 4, 1954

APPROVED FOR RELEASE: 07/19/2001 CIA-RDP86-00513R000514510017-7"

"APPROVED FOR RELEASE: 07/19/2001 CIA-RDP86-00513R000514510017-7

S/076/60/034/011/021/024
B004/B064

AUTHORS: Galinker, I. S. and Gavrish, M. L.

TITLE: Solubility of Alkaline-earth Hydroxides at High Temperatures

PERIODICAL: Zhurnal fizicheskoy khimii, 1960, Vol. 34, No. 11, pp. 2610-2612

TEXT: On the basis of their studies of the solubility of silver and copper halide compounds in water at temperatures of up to 340°C (Ref. 1), the authors arrived at the following conclusions: 1) Solubility increases rapidly with rising temperature in all readily melting salts which have a large number of covalent bonds. 2) In all salts with predominantly ionic binding and melting points above 800°C, the solubility first rises with temperature, and decreases above 300°C. These compounds become almost insoluble at the critical temperature of water. The authors have checked the validity of these assumptions by means of alkaline-earth hydroxides. The published data for $Ca(OH)_2$ hold only up to 190°C; for $Sr(OH)_2$, up to 100°C; and for $Ba(OH)_2$, up to 109°C; solubility

Card 1/2

APPROVED FOR RELEASE: 07/19/2001 CIA-RDP86-00513R000514510017-7"

"APPROVED FOR RELEASE: 07/19/2001 CIA-RDP86-00513R000514510017-7

Solubility of Alkaline-earth Hydroxides at High Temperatures

S/076/60/034/011/021/024
B004/B064

rises with temperature. According to the authors, especially the strongly ionically bound $Ba(OH)_2$ should show a decreasing solubility at higher temperatures. This was examined by means of an autoclave introduced into a nitrate-nitrite melt with a $Ba(OH)_2$ solution from which samples were filtered off. The solubility of barium hydroxide decreases rapidly above 250°C and is only 0.5% at 360°C. This observation is in accordance with the authors' assumption. There are 1 figure, 1 table, and 1 Soviet reference.

SUBMITTED: February 18, 1959

Card 2/2

APPROVED FOR RELEASE: 07/19/2001 CIA-RDP86-00513R000514510017-7"

"APPROVED FOR RELEASE: 07/19/2001 CIA-RDP86-00513R000514510017-7

S/081/62/000/019/025/053
B144/B180

AUTHORS: Gavrish, M. L., Galinker, I. S.

TITLE: Behavior of melted magnesium oxide in water at high temperatures

PERIODICAL: Referativnyy zhurnal. Khimiya, no. 19, 1962, 353, abstract 19K190 (Tr. Khar'kovsk. s.-kh. in-ta, v. 35 (72), 1961, 83-86)

TEXT: Tests showed that MgO sintered at 2800°C remains practically undissolved after prolonged boiling in distilled water, and the surface of the sample is unaltered. If this dead-burned MgO is heated between 175 and 350°C, lumps are quickly quenched to $Mg(OH)_2$ by water or by saturated steam. The chief factor in this process is the additional energy of the steam under pressure. [Abstracter's note: Complete translation.]

Card 1/1

APPROVED FOR RELEASE: 07/19/2001 CIA-RDP86-00513R000514510017-7"

"APPROVED FOR RELEASE: 07/19/2001 CIA-RDP86-00513R000514510017-7

GAVRISH, M.L.; GALINKER, I.S.

Reduction of cupric chloride by metallic silver in aqueous solutions at high temperatures. Zhur.fiz.khim. 37 no.2: 463-464 F '63. (MIRA 16:5)

1. Sel'skokhozyaystvennyy institut imeni Dokuchayeva.
(Copper chlorides) (Silver) (Reduction, Electrolytic)

APPROVED FOR RELEASE: 07/19/2001 CIA-RDP86-00513R000514510017-7"

"APPROVED FOR RELEASE: 07/19/2001 CIA-RDP86-00513R000514510017-7

GAVRISH, M.L.; GALINKER, I.S.

Complex salts of silver and copper halides in aqueous solutions at 300°C. Zhur. neorg. khim. 9 no.5:1289-1290 My '64. (MIRA 17:9)

APPROVED FOR RELEASE: 07/19/2001 CIA-RDP86-00513R000514510017-7"

"APPROVED FOR RELEASE: 07/19/2001 CIA-RDP86-00513R000514510017-7

L 28529-66 EWP(j)/EWT(m)/EWP(t)/ETI IJP(c) RM/JD/WB/GD

ACC NR: AT6013803 (A) SOURCE CODE: UR/0000/65/000/000/0284/0295

AUTHOR: Rozenfel'd, I. L.; Persiantseva, V. P.; Reyzin, B. L.; Shustova, Z. F.; Gavrish, N. M. 44 B+1

ORG: none

TITLE: Investigation of certain nitrobenzoic amine salts as corrosion inhibitors for ferrous and nonferrous metals 16 16

SOURCE: Korroziya metallov i splavov (Corrosion of metals and alloys), no. 2. Moscow, Izd-vo Metallurgiya, 1965, 284-295

TOPIC TAGS: amine salt, corrosion inhibitor, ferrous metal, nonferrous metal

ABSTRACT: The article presents the results of an investigation of the protective properties of certain inhibitors (nitro- and dinitrobenzoates) synthesized at the authors' laboratory; these properties were tested in natural as well as accelerated conditions involving cyclic and continuous exposure to moisture, with the aid of a specially developed device (Persiantseva, V. P., Rozenfel'd, I. L. Zavodskaya laboratoriya, 1958, 24, 7, 282). (The tests under natural conditions simulated the conditions under which metal products are stored in unheated warehouses and lasted for 21 months.) The inhibitors investigated were: hexamethyleneimine meta-nitrobenzoate, hexamethyleneimine ortho-nitrobenzoate, hexamethyleneimine 3,5-dinitrobenzoate, and piperidine 3,5-dinitrobenzoate. The coating of metal surface with

Card 1/2

APPROVED FOR RELEASE: 07/19/2001 CIA-RDP86-00513R000514510017-7"

"APPROVED FOR RELEASE: 07/19/2001 CIA-RDP86-00513R000514510017-7

L 28529-66

ACC NR: AT6013803

an inhibitor was accomplished through adsorption from vapor phase or by washing the specimens in alcohol solutions of the inhibitors with subsequent drying at room temperature. Protective properties were determined according to the time elapsed until the appearance of first signs of corrosion and according to corrosion rate (as determined by gravimetric method). Findings: When applied in the form of alcohol solutions, all the four tested chemicals proved to be effective inhibitors of atmospheric corrosion under conditions simulating storage of metals in unheated warehouses, in industrial districts (where the atmosphere is more contaminated), for not only ferrous metals but also the most widely used nonferrous metals, (Cu and its alloys, Ag, Sn, Al and its alloys, Ni and Cr coatings, and Zn and Cd coatings passivated in a $K_2Cr_2O_7$ solution). These findings should represent a major advance considering that previously the only other known volatile inhibitors used in industry protected only ferrous metals. Orig. art. has: 7 tables and 1 figure.

SUB CODE: 11, 07 / SUBM DATE: 19Jul65/ ORIG REF: 004/ OTH REF: 002

Card 2/2 cc

APPROVED FOR RELEASE: 07/19/2001 CIA-RDP86-00513R000514510017-7"

"APPROVED FOR RELEASE: 07/19/2001 CIA-RDP86-00513R000514510017-7

GAVRISH, M.T., kand.ekonom.nauk; OSTROVSKIY, S.Ya., kand.ekonom.nauk; PETROVSKIY, A.M., red.; LIMANOVA, M.I., tekhn.red.

[Forty years of agriculture in Kharkov Province] Sel'skoe khoziaistvo Khar'kovshchiny za 40 let. Khar'kov, Khar'kovskoe obl.izd-vo, 1958. 268 p. (MIRA 12:12)
(Kharkov Province--Agriculture)

APPROVED FOR RELEASE: 07/19/2001 CIA-RDP86-00513R000514510017-7"

"APPROVED FOR RELEASE: 07/19/2001 CIA-RDP86-00513R000514510017-7

KRAVCHENKO, Petr Stepanovich; TSYGANOK, Ivan Mikhaylovich [TSyhanok, I.M.], kand. ekonom. nauk ; GAVRISH, Mefodiy Timofeyevich [Havrysh, M.T.], kand. ekonom. nauk; PETROVSKIY, O.M. [Petrovs'kyi, O.M.], red.; LIMANOVA, M.I. [Lymanova, M.I.], tekhn. red.

[On the new virgin lands] Na novykh rubezhakh. Kharkiv, Kharkivs'ke knyzhkove vyd-vo, 1960. 92 p. (MIRA 14:10)

1. Predsedatel kolkhoza im. Kirova Kharkovskoy oblasti (for Kravchenko).

(Ukraine—Agriculture)

APPROVED FOR RELEASE: 07/19/2001 CIA-RDP86-00513R000514510017-7"

"APPROVED FOR RELEASE: 07/19/2001 CIA-RDP86-00513R000514510017-7

GAVRISH, N. P.

3

Melting-point diagram of the system benzene hexachloride-naphthalene. N. P. Gavrish. *Zhur. Obshchei Khim.* 25, 1700-1(1955). The cooling curve method was used to det. the phase diagram of the system of γ-isomer of benzene hexachloride (I) with $C_{10}H_8$. The results, shown graphically, indicate the existence of a max. at $2C_{10}H_8 \cdot C_6H_6Cl_6$, m.p. 58.25°, which is an unstable complex. A further break in the curve occurs at about 20% I and 80°.

G. M. Kosolapoff

APPROVED FOR RELEASE: 07/19/2001 CIA-RDP86-00513R000514510017-7"

"APPROVED FOR RELEASE: 07/19/2001 CIA-RDP86-00513R000514510017-7

GAVRISH N.P.

USSR / General and Special Zoology. Insects. P

Abs Jour: Ref Zhur-Biol., No 4, 1958, 16470

Author : Negrash K.A., Arabrarchuk I.L., Gavrish N.P.
Inst : Not given
Title : The Search for New Preparations in the Control of the Larvae of the Beet Weevil. (Bothynoderes punctiventris Germ.) (Izyskaniye novykh preparatov v bor'be s lichinkami sveklovichnogo dolgonosika. (Bothynoderes punctiventris Germ.)

Orig Pub: Nauchn. tr. Ukr. s.-kh.akad., 1956, 8, 163-170

Abstract: The fusion of 24.7% technical HCCH and 75.3% o [hexachloro cyclohexane] (preparation P-36) and of a 0.1% mixture with grey podzol soil caused the death of all the weevil beetles on the 12th day in laboratory experiments, just as the technical hexachlorocyclohexane (HCCH) did. P-36 used

Card 1/3

APPROVED FOR RELEASE: 07/19/2001 CIA-RDP86-00513R000514510017-7"

"APPROVED FOR RELEASE: 07/19/2001 CIA-RDP86-00513R000514510017-7

SKORODUMOV, B.A.; GAVRISH, N.P.

Closed systems for the testing of scraper conveyer reduction gear. Sbor.nauch.trud. KHGI 5:163-173 '58. (MIRA 14:4)
(Gearing—Testing)

APPROVED FOR RELEASE: 07/19/2001 CIA-RDP86-00513R000514510017-7"

"APPROVED FOR RELEASE: 07/19/2001 CIA-RDP86-00513R000514510017-7

GAVRISH, N.P.; SKORODUMOV, B.A.

Check testing of scraper conveyer reduction gear by the open circuit method. Sbor.nauch.trud. KHGI 5:175-184 '58. (MIRA 14:4)

(Gearing—Testing)

APPROVED FOR RELEASE: 07/19/2001 CIA-RDP86-00513R000514510017-7"

"APPROVED FOR RELEASE: 07/19/2001 CIA-RDP86-00513R000514510017-7

SINYAVSKAYA, V.M., inzh.; GAVRISH, P.D., inzh.; RUBANIK, M.N., inzh.

Actual testing of the hydraulic structures of the Stalingrad hydroelectric development. Gidr. stroi. 31 no.9:21-27 S '61.(MIRA 14:12)
(Volga Hydroelectric Power Station (22d Congress of the CPSU)—
Hydraulic structures)

APPROVED FOR RELEASE: 07/19/2001 CIA-RDP86-00513R000514510017-7"

"APPROVED FOR RELEASE: 07/19/2001 CIA-RDP86-00513R000514510017-7

GAVRISH, Pavel Ivanovich; TATARINOV, M.Ye., redaktor; ANDRIANOV, B.I., tekhnicheskiy redaktor.

[The combat engineers go ahead] Sapery idut vperedi. Moskva, Izd-vo DOSAAF, 1956. 55 p. (MLRA 9:5)
(Military field engineering)

APPROVED FOR RELEASE: 07/19/2001 CIA-RDP86-00513R000514510017-7"

"APPROVED FOR RELEASE: 07/19/2001 CIA-RDP86-00513R000514510017-7

VINOGRADOV, S.S., inzhener; GAVRISH, P.I., inzhener.

Static and dynamic balancing of marine turbine mechanisms. Sudostroenie 23 no.7:40-42 Jl '57. (MLRA 10:8)
(Turbomachines) (Marine engineering)

APPROVED FOR RELEASE: 07/19/2001 CIA-RDP86-00513R000514510017-7"

"APPROVED FOR RELEASE: 07/19/2001 CIA-RDP86-00513R000514510017-7

GAVRISH, F.I., inzh.

Over-all engineering documentation for repairing standard machinery. Sudostroenie 24 no. 6:43-45 Je '58. (MIRA 11:8)
(Marine engineering)

APPROVED FOR RELEASE: 07/19/2001 CIA-RDP86-00513R000514510017-7"

"APPROVED FOR RELEASE: 07/19/2001 CIA-RDP86-00513R000514510017-7

IVANOVA, A.M., inzh.; GAVRISH, P.I., inzh.

Developing a record of ship maintenance procedures. Sudostroenie 26 no.8:52-53 Ag '60. (MIRA 13:10)
(Ships—Maintenance and repair)

APPROVED FOR RELEASE: 07/19/2001 CIA-RDP86-00513R000514510017-7"

"APPROVED FOR RELEASE: 07/19/2001 CIA-RDP86-00513R000514510017-7

GAVRISH, P.I., inzh.

Function of nonequilibrium tolerance in static and dynamic balancing. Sudostroenie 27 no.12:19-27 D '61. (MIRA 15:1)
(Marine engineering)

APPROVED FOR RELEASE: 07/19/2001 CIA-RDP86-00513R000514510017-7"

"APPROVED FOR RELEASE: 07/19/2001 CIA-RDP86-00513R000514510017-7

L 47074-65 EWT(1)/EEC(m)/EEC(k)-2/EWA(h) Pc-4/Pq-4/Pq-4/Peb/P1-4/P1-4

ACCESSION NR: AP5011878 UR/0120/65/000/002/0094/0100

38
37
B

AUTHOR: Gavrish, P. P.; Denisov, Yu. N.; Komissarov, A. G.; Lachinov, V. M.; Prilipko, V. I.; Susov, Yu. I.; Shishlyannikov, P. T.

TITLE: Wide-range automatic electronic-counter frequency meter

SOURCE: Pribory i tekhnika eksperimenta, no. 2, 1965, 94-100

TOPIC TAGS: frequency meter, electronic frequency meter 25

ABSTRACT: An electronic-counter-type frequency meter is described which is intended for measuring the frequency of sinusoidal or pulse signals within the 0.1—100-Mc range. Measurements can be made either automatically every 5—30 sec or sporadically by pushbutton. The digital-type instrument operates from 0.05—1 v at its input, displays the results on decade tubes, and can also deliver a binary-decimal code suitable for computers. The frequency meter can be used not only for direct frequency measurement but also in conjunction with a nuclear

Card 1/2

APPROVED FOR RELEASE: 07/19/2001 CIA-RDP86-00513R000514510017-7"

"APPROVED FOR RELEASE: 07/19/2001 CIA-RDP86-00513R000514510017-7

L 47074-65

ACCESSION NR: AP5011878

magnetometer for precision measurement of magnetic field strength. A block diagram and circuit diagrams of the amplifier, a 1-Mc reference crystal oscillator, a cold-cathode-tube relaxation generator, frequency dividers, counter decades, an output-to-printer unit, and a clock-frequency decade unit are presented. Orig. art. has: 7 figures and 1 formula. [03]

ASSOCIATION: Ob"yedinennyy institut yadernykh issledovaniy (Joint Institute of Nuclear Research)

SUBMITTED: 06Mar64 ENCL: 00 SUB CODE: EC

NO REF SOV: 003 OTHER: 000 ATD PRESS: 4001

Card 2/2

APPROVED FOR RELEASE: 07/19/2001 CIA-RDP86-00513R000514510017-7"

"APPROVED FOR RELEASE: 07/19/2001 CIA-RDP86-00513R000514510017-7

GAVRISH, V. G.

How to prevent the infection of grain by pests Moskva, Ministerstvo sel'skogo khoziaistva i zagotovok SSSR, 1953. 50 p. (Biblioteka rabotnika elevatorno-skladskogo khoziaistva)

APPROVED FOR RELEASE: 07/19/2001 CIA-RDP86-00513R000514510017-7"

"APPROVED FOR RELEASE: 07/19/2001 CIA-RDP86-00513R000514510017-7

GAVRISH, V.

Continue experimenting on the utilization of mechanical ventilation systems for drying ear corn. Muk.-elev.prom. 21 no.11:29 N '55. (MLRA 9:4)

1.Rossiyskaya kontora Zagotzerno.
(Corn (Maize)) (Grain--Drying)

APPROVED FOR RELEASE: 07/19/2001 CIA-RDP86-00513R000514510017-7"

"APPROVED FOR RELEASE: 07/19/2001 CIA-RDP86-00513R000514510017-7

GAVRISH, V.[G.]

Pamphlet on marketing and storing corn ("Corn; marketing and storing." L.A.Trisviatskii. Reviewed by V.Gavrish). Muk.-elev.prom.22 no.2:32 F '56. (MLRA 9:6)

1.Rossiyskaya respublikanskaya kontora, Zagotzerno.
(Corn (Maize))

APPROVED FOR RELEASE: 07/19/2001 CIA-RDP86-00513R000514510017-7"

"APPROVED FOR RELEASE: 07/19/2001 CIA-RDP86-00513R000514510017-7

GAVRISH, V., agronom.

Transportation of seed corn. Muk.-elev.prom 22 no.9:11-12 S '56. (MLRA 10:8)

1.Roglavserno Ministerstva khleboproduktov RSFSR.
(Corn (Maize))--Transportation)

APPROVED FOR RELEASE: 07/19/2001 CIA-RDP86-00513R000514510017-7"

"APPROVED FOR RELEASE: 07/19/2001 CIA-RDP86-00513R000514510017-7

AUTHOR: Gavrish, V., Engineer SOV/29-58-7-16/23

TITLE: Little Town on Wheels (Gorodok na kolesakh)

PERIODICAL: Tekhnika molodezhi, 1958, Nr 7, pp. 26-27 (USSR)

ABSTRACT: Usually agricultural field work and the preliminary work in connection with the digging of pits, building of roads, and the erection of hydrotechnical and industrial buildings is carried out at some distance from human settlements. Kolkhoz- and construction workers are taken to the places where they work in lorries. This, however, is a useless waste of working capacity, time, and fuel. The idea of creating a "town on wheels" which serves as a temporary dwelling as necessity arises was heartily welcomed by young workers. The rapid construction of 35 shafts in the Donets basin caused a large number of "Komsomol members" from all parts of the Ukraine to come to this area. A group of workers of the ministry of coal-mine construction of the Ukraine SSR under the supervision of Komsomol member V.Zinov'yev designed and completed in their automobile repair-shop a mobile automobile town able to accommodate 50 persons. This town consists of 6 wagons, of which 4 are used for dwelling purposes; the other two contain a bath and a

Card 1/3

APPROVED FOR RELEASE: 07/19/2001 CIA-RDP86-00513R000514510017-7"

"APPROVED FOR RELEASE: 07/19/2001 CIA-RDP86-00513R000514510017-7

Little Town on Wheels

SOV/ 29-58-7-16/23

cantine respectively. The number of wagons used as living-rooms can be increased or reduced according to necessity; they are trailers with two axles divided into 4 compartments: 1.) A lavatory with heating- and hot-water boiler, washbasin, W.C., 2.) Bedroom with folding beds, folding tables, chests for baggage, 3.) A compartment containing wardrobes and presses for working clothes and -kit, 4.) Antechamber under the floor of which a detachable ladder is mounted. The floors are covered with waxcloth. The wagon is lighted by a 12 Volt electrical plant. There is a telephone and a wireless set. The cantine wagon has 3 compartments: kitchen, dining room, and pantry. The kitchen and the dining room have two ventilators each. Under the floors there is storage room for ice and provisions. The mobile bath has 5 compartments: boiler room, shower, dressing- and anteroom, laundry. The "town on wheels" gave excellent proof of its usefulness when the Chernovitskaya-Komsomol'skaya shaft of the "Voroshilovgradshakhtprokhodka" Trust was built in record time. Apart from its economy and the considerable saving of expense, a town on wheels offers the additional and main advantage of providing normal dwelling- and living conditions for workers working far

Card 2/3

APPROVED FOR RELEASE: 07/19/2001 CIA-RDP86-00513R000514510017-7"

"APPROVED FOR RELEASE: 07/19/2001 CIA-RDP86-00513R000514510017-7

Little Town on Wheels

SOV/29-58-7-16/23

away from their homes. There are 4 figures.

1. Construction--USSR 2. Agriculture--USSR 3. Personnel --Performance

Card 3/3

APPROVED FOR RELEASE: 07/19/2001 CIA-RDP86-00513R000514510017-7"

"APPROVED FOR RELEASE: 07/19/2001 CIA-RDP86-00513R000514510017-7

GAVRISH, Valentin Ivanovich; KIRZHNER, D.M., redaktor; FEYTEL'MAN, N.G., redaktor; ALADOVA, Ye.I., tekhnicheskiy redaktor; ANDREYEV, G.G. tekhnicheskiy redaktor.

[Cost accounting and the growth of capital in the coal industry] Khozraschet i uvelichenie nakoplenii v ugol'noi promyshlennosti. Moskva, Ugletekhizdat, 1955. 149 p. [Microfilm] (MLRA 9:1)
(Coal mines and mining--Accounting)

APPROVED FOR RELEASE: 07/19/2001 CIA-RDP86-00513R000514510017-7"

"APPROVED FOR RELEASE: 07/19/2001 CIA-RDP86-00513R000514510017-7

GAVRISH, V.I., dotsent.

[redacted]

Profitableness of coal mining as reflected in economic publications on mining. Ugol' 32 no.5:45-47 My '57. (MLRA 10:5)
(Coal mines and mining) (Mining industry and finance)

APPROVED FOR RELEASE: 07/19/2001 CIA-RDP86-00513R000514510017-7"

"APPROVED FOR RELEASE: 07/19/2001 CIA-RDP86-00513R000514510017-7

PODKOLZIN, P.S.; PINSKER, P.Z.; GOLOVKO, Ya.S.; GAVRISH, V.I.

Mining industry in the Ukraine on the 40th anniversary of the Great October. Nauch. trudy KHGI no.6:15-29 '58. (MIRA 14:4)

(Ukraine--Mines and mineral resources)

APPROVED FOR RELEASE: 07/19/2001 CIA-RDP86-00513R000514510017-7"