"APPROVED FOR RELEASE: 09/17/2001 CIA-RDP86-00513R000614220016-9

MUSHTARI, Kh.M., red.; ALUMYAE, N.A., red.; BOLOTIN, V.V., red.; VOL'MIR, A.S., red.; GANIYEV, N.S., red.; GOL'DENVEYZER, A.L., red.; ISANBAYEVA, F.S., red.; KIL'CHEVSKIY, N.A., red.; KORNISHIN, M.S., red.; LUR'YE, A.I., red.; SAVIN, G.N., red.; SACHENKOV, A.V., red.; SVIRSKIY, I.V., red.; SURKIN, R.G., red.; FILIPPOV, A.P., red.; ALEKSAGIN, V.I., red.; SEMENOV, Yu.P., tekhn. red.

[Proceedings of the Conference on the Theory of Plates and Shells] Trudy Konferentsii po teorii plastin i obolochek, Kazan', 1960. Kazan', Akad. nauk SSSR, Kazanskii filial, 1960. 426 p. (MIRA 15:7)

1. Konferentsiya po teorii plastin i obolochek, Kazan', 1960. 2. Moskovskiy energeticheskiy institut (for Bolotin). 3. Kazanskiy khimiko-tekhnologicheskiy institut (for Ganiyev). 4. Institut mekhaniki Akademii nauk USSR (for Kil'chevskiy). 5. Kazanskiy gosudarstvennyy universitet (for Sachenkov). 6. Kazanskiy filial Akademii nauk SSSR (for Svirskiy).
(Elastic plates and shells)

APPROVED FOR RELEASE: 09/17/2001 CIA-RDP86-00513R000614220016-9"

"APPROVED FOR RELEASE: 09/17/2001 CIA-RDP86-00513R000614220016-9

S/124/63/000/001/044/080
D234/D308

AUTHOR: Ganiyev, N.S.

TITLE: Inverse problems of bending of shells rectangular in plan

PERIODICAL: Referativnyy zhurnal, Mekhanika, no. 1, 1963, 12, abstract 1V81 (Tr. Konferentsii po teorii plastin i obolochek, 1960, Kazan' 1961, 107-112)

TEXT: Two examples of inverse problems of the theory of shells are given (see Kh.M. Mushtari, Dokl. AN SSSR, 1957, v. 116, no. 1, 35-37, RZhMekh, 1959, no. 4, 4146). In the first example the author considers the bending of a hinged shallow shell rectangular in plan. The initial form of the shell with which it goes over into a plane under the action of normal pressure, is determined. The problem is solved and numerical results are obtained. In the second example cylindrical bending of a plate with initial curvature is considered. The author determines the form of the initial deflection for which an infinitely long plate assumes a plane position under

Card 1/2

APPROVED FOR RELEASE: 09/17/2001 CIA-RDP86-00513R000614220016-9"

"APPROVED FOR RELEASE: 09/17/2001 CIA-RDP86-00513R000614220016-9

S/124/63/000/001/044/080
D234/D308

Inverse problems of bending ...

uniformly distributed normal load.
[Abstracter's note: Complete translation]

Card 2/2

APPROVED FOR RELEASE: 09/17/2001 CIA-RDP86-00513R000614220016-9"

"APPROVED FOR RELEASE: 09/17/2001 CIA-RDP86-00513R000614220016-9

S/879/62/000/000/061/088
D234/D308

AUTHOR: Ganiyev, N. S. (Kazan')

TITLE: Medium bending of a rectangular plane with an initial warping, subjected to a uniformly distributed load

SOURCE: Teoriya plastin i obolochek: trudy II Vsesoyuznoy konferentsii, L'vov, 15-21 sentyabrya 1961 g. Kiev, Izd-vo AN USSR, 1962, 353-357

TEXT: The form of the initial deviation from plane for was chosen as

$$w^0 = \delta_0 \sin \frac{\pi x}{a} \sin \frac{\pi y}{b} \qquad (4)$$

The edges were assumed to be hinged and deformable along their length. Equations obtained by the Bubnov-Galerkin method are not quoted, being rather unwieldy. Formulas are given for deflection membrane stress and bending stress at the center, as well as support reaction at the corners are given for $\lambda = 1$ and 2, and some coefficients are tabulated. There are 2 tables.

Card 1/1

APPROVED FOR RELEASE: 09/17/2001 CIA-RDP86-00513R000614220016-9"

"APPROVED FOR RELEASE: 09/17/2001 CIA-RDP86-00513R000614220016-9

GANIYEV, R.F. (Moskva); FROLOV, K.V. (Moskva)

A typical problem of vibration damping in a nonlinear setup. Mashinovedenie no.4:17-23 '65. (MIRA 18:8)

APPROVED FOR RELEASE: 09/17/2001 CIA-RDP86-00513R000614220016-9"

"APPROVED FOR RELEASE: 09/17/2001 CIA-RDP86-00513R000614220016-9

L 8930-66 EWT(d)/EWT(1)/EWT(m)/EWP(w)/EWP(k)/ETC(m) IJP(c) WW/EM

ACC NR: AP5026927 SOURCE CODE: UR/0373/65/000/005/0031/0037

44,55 44,55

AUTHORS: Ganiyev, R. F. (Moscow); Kononenko, V. O. (Moscow)

ORG: none

21, 44, 55

TITLE: On nonlinear oscillations of a solid body supporting a rotating rotor

SOURCE: AN SSSR. Izvestiya. Mekhanika, no. 5, 1965, 31-37

TOPIC TAGS: nonlinear mechanics, forced oscillation, free oscillation, stability criterion, Euler equation

16, 44, 55

ABSTRACT: The nonlinear oscillations of a solid body carrying a rotating rotor R (see Fig. 1) are studied analytically. The purpose of the investigation was to find the conditions which generate intensive body oscillations in the direction of the solid body's normal coordinate where no external perturbations exist. The rotor is assumed to rotate with constant speed p and to have a center of mass that coincides with the center of mass of the solid body S. The analysis is carried out by using movable coordinates $O_1\xi_1\eta_1\zeta_1$ with the following relations between the various inertial forces and moments

$$H_\xi = H_1\xi^{\cdot}, H_\eta = H_2\eta^{\cdot}, H_\zeta = H_3\zeta^{\cdot}, N_\theta = H_4\theta^{\cdot}, N_\psi = H_5\psi^{\cdot}, N_\varphi = H_6\varphi^{\cdot}.$$

Card 1/4

APPROVED FOR RELEASE: 09/17/2001 CIA-RDP86-00513R000614220016-9"

"APPROVED FOR RELEASE: 09/17/2001 CIA-RDP86-00513R000614220016-9

L 8930-66

ACC NR: AP5026927

Fig. 1.

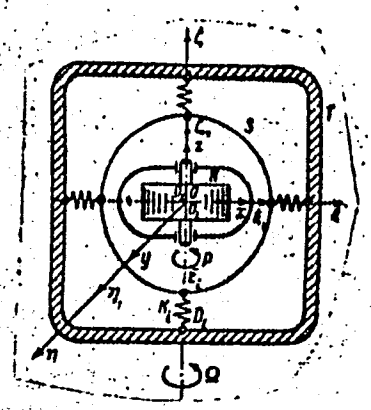

The generalized Euler equations and the various kinematic relations are written for the spring-mass model given in Fig. 2. The equations are simplified for a near resonance case $\omega_4 \approx {}^1/_2\omega$ to yield the set of equations

$$\frac{dy_1}{dt} = \mu S_1 y_2,\ \frac{d\beta_1}{dt} = 0,\quad \frac{dy_2}{dt} = \mu S_2 y_2,\ \frac{d\beta_2}{dt} = 0,\ \frac{dy_3}{dt} = -\frac{1}{2}\mu h_3 y_3,\ \frac{d\beta_3}{dt} = 0$$

$$\frac{dy_4}{dt} = \mu(g_1 + g_2 \sin 2\beta_4 + g_3 \cos 2\beta_4)\, y_4,\ \frac{d\beta_4}{dt} = \mu e_4 + \mu(g_3 \cos 2\beta_4 - g_2 \sin 2\beta_4)$$

$$\frac{dy_5}{dt} = \mu S_5 y_5,\ \frac{d\beta_5}{dt} = 0,\quad \frac{dy_6}{dt} = -\frac{\mu}{2} h_6 y_6,\ \frac{d\beta_6}{dt} = 0.$$

Card 2/4

APPROVED FOR RELEASE: 09/17/2001 CIA-RDP86-00513R000614220016-9"

"APPROVED FOR RELEASE: 09/17/2001 CIA-RDP86-00513R000614220016-9

L 8930-66
ACC NR: AP5026927

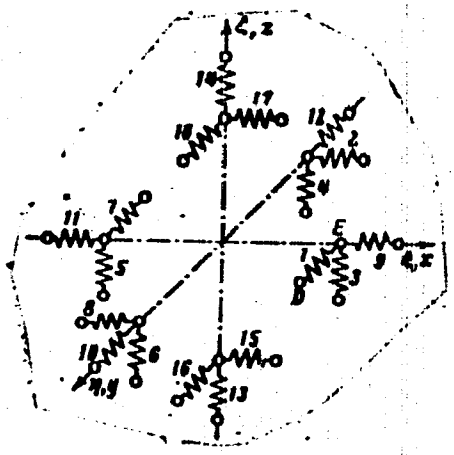

Fig. 2.

It is shown that conditions $y_3 = 0$ and $y_6 = 0$ are stable for $h_3 > 0$ and $h_6 > 0$ and $y_1 = y_2 = y_5 = 0$ are stable for negative values of S_1, S_2, S_5. The necessary and sufficient conditions for stability in $y_4 = 0$ are shown to be

$$\mu g_1 < 0, \quad \mu^2 (g_1^2 - g_2^2 - g_3^2 + g_4^2) > 0 .$$

Card 3/4

APPROVED FOR RELEASE: 09/17/2001 CIA-RDP86-00513R000614220016-9"

"APPROVED FOR RELEASE: 09/17/2001 CIA-RDP86-00513R000614220016-9

L 8930-66
ACC NR: AP5026927

These stability criteria are reviewed for cases with and without body rotations Ω. Orig. art. has: 17 equations and 2 figures.

SUB CODE: 20/ SUBM DATE: 10May65/ ORIG REF: 005

Card 4/4

APPROVED FOR RELEASE: 09/17/2001 CIA-RDP86-00513R000614220016-9"

"APPROVED FOR RELEASE: 09/17/2001 CIA-RDP86-00513R000614220016-9

GANIYEV, Salom Gulyamovich; TIKHONOVA, I., red.; SALAKHUTDINOVA, A., tekhn. red.

[Sericulture of Uzbekistan] Shelkovodstvo Uzbekistana. Tashkent, Gos.izd-vo UzSSR, 1961. 26 p. (MIRA 17:2)

APPROVED FOR RELEASE: 09/17/2001 CIA-RDP86-00513R000614220016-9"

"APPROVED FOR RELEASE: 09/17/2001 CIA-RDP86-00513R000614220016-9

L 63613-65 EWT(d)/EEC-4/EED-2/EWP(1) Pq-4/Pac-4/Pg-4/Pk-4 IJP(c) BB/GG

ACCESSION NR: AT5012463 UR/3151/64/000/001/0180/0183

33
B+1

AUTHOR: Ganiyev, S. K.

TITLE: Remote transmission of the results of calculations from a 'Ural' computer with the aid of start-stop telegraph equipment

SOURCE: AN UzSSR. Institut mekhaniki i Vychislitel'nyy tsentr. Voprosy vychislitel'noy matematiki i tekhniki, no. 1, 1964, 180-183

TOPIC TAGS: computer readout, computer output transmission, telegraph transmission, remote transmission

ABSTRACT: The reason for using start-stop telegraph apparatus to transmit the output of a digital computer over some distance is the low cost of the apparatus and the fact that the latter is commercially obtainable. In addition, standard telegraph apparatus prints the results on a broad chart (250 mm) with a carbon copy. This makes it possible to monitor visually the results of the calculations. The apparatus for transmitting the results of the calculations over a distance consists of a generator of single pulses, a start register,

Card 1/2

APPROVED FOR RELEASE: 09/17/2001 CIA-RDP86-00513R000614220016-9"

"APPROVED FOR RELEASE: 09/17/2001 CIA-RDP86-00513R000614220016-9

L 63613-65

ACCESSION NR: AT5012463

a 'response signal' register, a printer register, inverters, and relays. The operation of the equipment is briefly described and is based on conversion of the number from the computer from binary code to the telegraph code. The 'response signal' is used to prevent copying of the results from the adder to the register of the printing unit until the preceding number has been transmitted and printed. Original article has: 1 figure

ASSOCIATION: None

SUBMITTED: 00 ENCL: 00 SUB CODE: DP

NR REF SOV: 000 OTHER: 000

llc

Card 2/2

APPROVED FOR RELEASE: 09/17/2001 CIA-RDP86-00513R000614220016-9"

"APPROVED FOR RELEASE: 09/17/2001 CIA-RDP86-00513R000614220016-9

SOV/137-59-3-7059

Translation from: Referativnyy zhurnal. Metallurgiya, 1959, Nr 3, p 304 (USSR)

AUTHORS: Pivovarov, I. F., Ganiyev, S. M.

TITLE: A Device for Normalization of Welded Seams of Pipes Employed in Geological Prospecting (Ustanovka dlya normalizatsii svarnykh shvov geologorazvedochnykh trub)

PERIODICAL: Novosti neft. tekhn. Neftepromysl. delo, 1958, Nr 7, pp 26-28

ABSTRACT: A description of a semiautomatic device designed to perform the operations of normalization of welded seams of pipes employed in geological prospecting. The installation consists of a frequency converter, an induction device permitting heating of the seam area by means of HF currents (a description of the device is given), three control pulpits containing also the automatic apparatus, and a conveyor. A generator of the type PVS-100/2500 serves as a frequency converter. Stable results are achieved by means of automatically maintaining the generator voltage at a constant value with the aid of an amplifier of the type EMU-12 and by controlling the heating time with the aid of a time-delay relay. The temperature fluctuations in the zone of heating of the pipe vary within the allowable limits of

Card 1/2

APPROVED FOR RELEASE: 09/17/2001 CIA-RDP86-00513R000614220016-9"

"APPROVED FOR RELEASE: 09/17/2001 CIA-RDP86-00513R000614220016-9

SOV/137-59-3-7059

A Device for Normalization of Welded Seams of Pipes (cont.)

1980±50[°C]. The power supplied to the induction device amounts to 30 kw, the heating time constituting 25 seconds; the consumption of electrical energy on one connection of a 60-mm pipe amounts to 0.45 kw/hr.

V. A.

Card 2/2

APPROVED FOR RELEASE: 09/17/2001 CIA-RDP86-00513R000614220016-9"

"APPROVED FOR RELEASE: 09/17/2001 CIA-RDP86-00513R000614220016-9

KORNEV, T.N.; GANIYEV, S.M.

Selecting a method of quality control of butt-welded drill pipe joints. Avtom. svar. 16 no.6:55-62 Je '63. (MIRA 16:7)

1. Azerbaydzhanskiy nauchno-issledovatel'skiy institut neftyanogo mashinostroyeniya.
(Pipe, Steel--Welding) (Nondestructive testing)

APPROVED FOR RELEASE: 09/17/2001 CIA-RDP86-00513R000614220016-9"

"APPROVED FOR RELEASE: 09/17/2001 CIA-RDP86-00513R000614220016-9

SUTOVSKIY, P.M., inzh.; GANIYEV, S.M., inzh.; TIMOFEYEV, V.I., inzh.

Machine for the friction welding of connection ends to drill pipes. Svar.proizv. no.2:15-17 F '64. (MIRA 18:1)

1. Azerbaydzhanskiy nauchno-issledovatel'skiy institut neftyanogo mashinostroyeniya.

APPROVED FOR RELEASE: 09/17/2001 CIA-RDP86-00513R000614220016-9"

"APPROVED FOR RELEASE: 09/17/2001 CIA-RDP86-00513R000614220016-9

GANIZEV, T. K.

Ganizev, T. K. and Agabalyan, M. M. - "On the problem of specific prophylaxis of pasteurellosis in large horned cattle and buffaloes", Izvestiya Akad. nauk Azerbaydzh. SSR, 1948, No. 10, p. 65-74, (Resume in Azerbaijani), - Bibliog: 6 items.

SO: U-3042, 11 March 53, (Letopis 'Zhurnal 'nykh Statey, No. 8, 1949).

APPROVED FOR RELEASE: 09/17/2001 CIA-RDP86-00513R000614220016-9"

"APPROVED FOR RELEASE: 09/17/2001 CIA-RDP86-00513R000614220016-9

38246 GANIYEV, T. K.

Epizootologiya pasterelleza keupnogo rogatogo skota i buyvolov. - V ogl: T. G. (!) Ganiev. Trudy Azerbaydzh. Nauch.-issled. vet. opyt. stantsii, t. III, 1949, s. 56-67. - Na azerbaydzh. i rus. yaz.

APPROVED FOR RELEASE: 09/17/2001 CIA-RDP86-00513R000614220016-9"

"APPROVED FOR RELEASE: 09/17/2001 CIA-RDP86-00513R000614220016-9

33247 GANIYEV, T. K. and AGABABYAN, M. M.

K voprosy o pnevmonii yagnyat s nevyyasnennoy etiologiyey. - V ogl. l.-y avt: T. G. (!) Ganiyev. Trudy Azerbaydzh. Nauch.-issled. vet. opytstantsii, t. III, 1949, s. 75-80.- Bibliogr: 8 Nazv.

APPROVED FOR RELEASE: 09/17/2001 CIA-RDP86-00513R000614220016-9"

"APPROVED FOR RELEASE: 09/17/2001 CIA-RDP86-00513R000614220016-9

GANIYEV, T. K., Prof

FM 63/49T96

USSR/Medicine - Pasteurellosis Mar 49
Medicine - Vaccinotherapy

"In the Ministry of Agriculture USSR" 1 p

"Veterinariya" No 3

Prof T. K. Ganiyev, Dr Vet Sci, submitted a report on the results of using his vaccine against pasteurellosis in large horned cattle and water buffalo. Effect of the vaccine was tested in 1947 - 1948 in several kolkhozes of Azerbaydzhan SSR. Vaccine was used on 3,000 head of large horned cattle and 1,400 buffalo with good results. Conference recommended production tests of the vaccine.

63/49T96

USSR/Medicine - Pasteurellosis (Contd) Mar 49

At a conference held 15 - 16 Dec 48, participants agreed that a 5% solution of DDT in oil and a 20% decoction of white hellebore rhizome proved best in protecting large horned cattle against skin gadflies.

63/49T96

APPROVED FOR RELEASE: 09/17/2001 CIA-RDP86-00513R000614220016-9"

"APPROVED FOR RELEASE: 09/17/2001 CIA-RDP86-00513R000614220016-9

USSR/Medicine, Veterinary - Infectious Diseases

Jun 52

"Investigation of a Vaccine Against Pasteurellosis of Cattle and Buffalos in Azerbaydzhan," Prof T. K. Ganiyev, M. M. Agababyan, Azerbaydzhan NIVOS (Vet Sci Res Exptl Sta)

"Veterinariya" No 6, pp 30-31

Describes exptl vaccination of cattle and buffalos in Azerbaydzhan, with a new semiliquid formol vaccine against pasteurellosis. States this vaccine was prepd according to a formula developed at the

PA 228T43

(1)

228T43

Azerbaydzhan NIVOS. It proved efficient, article says, possessing good immunological properties and contributing to the saving of a large amt of previously used antipasteurellosis serum. Expts showed that immunization of animals with the semi-liquid vaccine gave best results when the vaccination was performed in 2 stages, at 2-3 wk intervals between the injections. States that this method produces an immunity in animals effective for 6 mos. Active vaccination reduced the number of infected herds and lowered the mortality of animals from pasteurellosis. It has been found advisable to vaccinate the cattle twice a yr, early in the spring, in Mar or Apr, and in the autumn, in Sep or Oct. The new

(2)

228T43

GANIYEV, T. K.

semiliquid vaccine against pasteurellosis in cattle and buffalos has been officially designated for use by the Vet Admin, Main Animal Husbandry Admin, Min of Agr USSR.

(3)

228T43

Also in MIRA for Aug 1952

APPROVED FOR RELEASE: 09/17/2001 CIA-RDP86-00513R000614220016-9"

"APPROVED FOR RELEASE: 09/17/2001 CIA-RDP86-00513R000614220016-9

GANIEV

Category: USSR / Farm Animal Diseases Caused by Bacteria and Fungi V-2

Abs Jour: Refer. Zhur-Biologiya, No 16, 1957, 72288

Author : Ganiev, Akhmedov, Kyamalov, Vanesyan
Inst : Not given
Title : Diplococcic Infection in Calves.

Orig Pub: Sots. S-KH. Azerbaidzhana, 1956, No 11, 34-37

Abstract: Diplococcic infection was observed on a farm, where 58.1 percent of calves were diseased, and 16.5 percent died. The calves became sick at the age of 1 day to 3 months. The course of disease was acute, subacute, and chronic in form. In the acute form the body temperature rose, there was a loss in appetite, tearing, and a depressed state. In the subacute - there was a rise in temperature, cough, diarrhea, swelling of the joints, and lameness. The duration of the disease - 10-12 days. In the chronic form a cough was noted, delayed growth and exhaustion of the animals. The disease lasted at times longer than one month. The infection occurred in utero, aerongenously, and particularly through the digestive tract. The spreading

Card : 1/2

APPROVED FOR RELEASE: 09/17/2001 CIA-RDP86-00513R000614220016-9"

"APPROVED FOR RELEASE: 09/17/2001 CIA-RDP86-00513R000614220016-9

Category: USSR / Farm Animal Diseases Caused by Bacteria and Fungi. V-2

Abs Jour: Refer. Zhur-Biologiya, No 16, 1957, 72288

of the disease was increased by high relative humidity, increase in ammonia and carbon dioxide in the barn. From the preparations used for the treatment of calves the best results (92.8 percent of cure) gave ekmonovocillin-1, given intramuscularly in a dose of 5,000 international units per kg every 20-24 hours (cure in 3-6 injections).

Card : 2/2

APPROVED FOR RELEASE: 09/17/2001 CIA-RDP86-00513R000614220016-9"

"APPROVED FOR RELEASE: 09/17/2001 CIA-RDP86-00513R000614220016-9

GANIYEV, T.K., prof.; MAMEDOVA, D.G., mladshiy nauchnyy sotrudnik

Natural focuses of listeriosis in farm animals. Veterinariia 39 no.8:22-24 Ag '62. (MIRA 17:12)

1. Azerbaydzhanskiy nauchno-issledovatel'skiy veterinarnyy institut.

APPROVED FOR RELEASE: 09/17/2001 CIA-RDP86-00513R000614220016-9"

"APPROVED FOR RELEASE: 09/17/2001 CIA-RDP86-00513R000614220016-9

GANIYEV, U. G.

130. Investigations of the Effect of Bacterial Dysentery on the Liver

"Functional Condition of the Liver in Acute Bacterial Dysentery," by U. G. Ganiyev, Tr. Kliniki Infekts. Bolezney, Tashkentts. Med. In-t, Tashkent, Academy of Sciences Uzbekistan SSR, 1955, 45-52 (from Referativnyy Zhurnal -- Khimiya, Biologicheskaya Khimiya, No 21, 10 Nov 56, Abstract No 20437)

It was established that in acute bacterial dysentery the antitoxin and glycogen forming functions of the liver are disturbed, and are only partially restored by specific therapy.

Sum 1219

APPROVED FOR RELEASE: 09/17/2001 CIA-RDP86-00513R000614220016-9"

"APPROVED FOR RELEASE: 09/17/2001 CIA-RDP86-00513R000614220016-9

GANIYEV, U. G.: Master Med Sci (diss) -- "The functional state of the liver in patients with acute bacterial dysentery treated with synthomycin and phthalazole". Tashkent, 1959. 14 pp (Tasheknt State Med Inst), 220 copies (KL, No 15, 1959, 119)

APPROVED FOR RELEASE: 09/17/2001 CIA-RDP86-00513R000614220016-9"

"APPROVED FOR RELEASE: 09/17/2001 CIA-RDP86-00513R000614220016-9

MADZHIDOV, N.M., kand.med.nauk; GANIYEV, U.G., kand.med.nauk

Case of a tetanus syndrome following A_2 influenza (winter, 1959). Med. zhur. Uzb. no.5:83-84 My '60. (MIRA 15:3)

1. Iz kafedry infektsionnykh (zav. - prof. T.Kh. Nadzhmiddinov) i nervnykh bolezney Tashkentskogo gosudarstvennogo meditsinskogo instituta.

(TETANUS) (INFLUENZA)

APPROVED FOR RELEASE: 09/17/2001 CIA-RDP86-00513R000614220016-9"

"APPROVED FOR RELEASE: 09/17/2001 CIA-RDP86-00513R000614220016-9

GANIYEV, U.G.; TURSUNOV, Sh.T.

Antibiotic sensitivity of typhoid pathogens isolated from children and the problems of antibiotic therapy. Med. zhur. Uzb. no.9:41-42 S '62. (MIRA 17:2)

1. Iz kafedry infektsionnykh bolezney Andizhanskogo meditsinskogo instituta.

APPROVED FOR RELEASE: 09/17/2001 CIA-RDP86-00513R000614220016-9"

"APPROVED FOR RELEASE: 09/17/2001 CIA-RDP86-00513R000614220016-9

UZHAFAROV, A.D.; GANIYEV, U.G.; NEVSKIY, M.V.

State of the cardiovascular system in some infectious diseases. Sbor.nauch.trud. TCMI 22:83-86 '62. (MIRA 18:10)

1. Kafedra infektsionnykh bolezney (zav. kafedroy - prof. T.Kh. Nadzhmiddinov) Tashkentskogo gosudarstvennogo meditsinskogo instituta.

APPROVED FOR RELEASE: 09/17/2001 CIA-RDP86-00513R000614220016-9"

"APPROVED FOR RELEASE: 09/17/2001 CIA-RDP86-00513R000614220016-9

GRETSOV [illegible] [illegible]NIYEV, U.C.

[illegible] of treatment of nonrecurrent typhoid fever. Sbor.nauch.trud. TashGMI 22:185-190 '62. (MIRA 18:10)

1. Kafedra infektsionnykh bolezney (zav. kafedroy zasluzhennyy deyatel' nauki, doktor med.nauk prof. T.Kh.Nadzhmiddinov) Tashkentskogo gosudarstvennogo meditsinskogo instituta.

APPROVED FOR RELEASE: 09/17/2001 CIA-RDP86-00513R000614220016-9"

"APPROVED FOR RELEASE: 09/17/2001 CIA-RDP86-00513R000614220016-9

GANIYEV, U.G., kand. med. nauk; SAVINA, N.S.

Treatment of typhoid fever in children with average doses of synthomycin and levomycetin. Med. zhur. Uzb. no.6:55-58 Je'63 (MIRA 17:3)

1. Iz kafedry infektsionnykh bolezney Andizhanskogo meditsinskogo instituta.

APPROVED FOR RELEASE: 09/17/2001 CIA-RDP86-00513R000614220016-9"

"APPROVED FOR RELEASE: 09/17/2001 CIA-RDP86-00513R000614220016-9

GANIYEV, U.G.; SAVINA, N.S.

Effective therapy in dysentery and the degree of sensitivity of the causative agent of the disease to antibiotics. Sov.med. 26 no.1:126-129 Ja '63. (MIRA 16:4)

1. Iz kafedry infektsionnykh bolezney (zav. - dotsent U.G. Ganiyev) Andizhanskogo meditsinskogo instituta.
(DYSENTERY) (ANTIBIOTICS)

APPROVED FOR RELEASE: 09/17/2001 CIA-RDP86-00513R000614220016-9"

"APPROVED FOR RELEASE: 09/17/2001 CIA-RDP86-00513R000614220016-9

GANIYEV, V.G.

Using local honey locust as building materials. Izv. AN Uz. SSR. Ser. tekh. nauk no.5:81-86 '58. (MIRA 11:12)

1.Tashkenetskiy institut inzhenerov irrigatsii i mekhanizatsii sel'skogo khozyaystva.
(Uzbekistan--Honey locust)
(Uzbekistan--Building materials)

APPROVED FOR RELEASE: 09/17/2001 CIA-RDP86-00513R000614220016-9"

"APPROVED FOR RELEASE: 09/17/2001 CIA-RDP86-00513R000614220016-9

GANIYEV, V.Sh.

Role of additional lateral branches in cotton yield. Uzb. biol. zhur. 8 no.3:54-57 '64. (MIRA 17:12)

1. Institut genetiki i fiziologii rasteniy AN Uzbekskoy SSR.

APPROVED FOR RELEASE: 09/17/2001 CIA-RDP86-00513R000614220016-9"

"APPROVED FOR RELEASE: 09/17/2001 CIA-RDP86-00513R000614220016-9

GELLER, Z.I.; RASTORGUYEV, Yu.L.; GANIYEV, Yu.A.

Heat conductivity of selective solvents. Izv. vys. uchebn. zav.; neft' i gaz 8 no.6:79-83 '65. (MIRA 18:7)

1. Groznenskiy neftyanoy institut.

APPROVED FOR RELEASE: 09/17/2001 CIA-RDP86-00513R000614220016-9"

"APPROVED FOR RELEASE: 09/17/2001 CIA-RDP86-00513R000614220016-9

GANIYEVA, A.Kh.; GANDEL'SMAN, A.M.

New forms of activity of the Scientific and Technical Society and factory technical councils. Shvein.prom. no.3:27-28 My-Je '62. (MIRA 15:6)

(Clothing industry--Technological innovations)

APPROVED FOR RELEASE: 09/17/2001 CIA-RDP86-00513R000614220016-9"

"APPROVED FOR RELEASE: 09/17/2001 CIA-RDP86-00513R000614220016-9

ACCESSION NR: AP4033720 S/0218/64/029/002/0288/0299

AUTHOR: Vereshchagin, A. G.; Ganiyeva, M.

TITLE: Lipid metabolism in maturing and germinating cotton seeds and the effect of gamma irradiation on this process

SOURCE: Biokhimiya, v. 29, no. 2, 1964, 288-299

TOPIC TAGS: lipid metabolism, cottonseed irradiation, germinating seed irradiation, gamma irradiation, cottonseed stored lipid, lipid interconversion, seed lipid expenditure, free fatty acid, triglyceride, triglyceride double bond

ABSTRACT: The conversion of stored lipids in sprouting seeds has not been fully studied as yet. Based on earlier work on the triglyceride composition of cottonseed oil (Gossypium hirsutum) and their biosynthesis, the authors used the chromatographic methods developed at that time to conduct the work presented. The preparation of the seeds is described (variety C-1622, obtained from the Tashkent Scientific Research Institute for Seed Selection). Seeds for sprouting were kept in water for 12 hours, then irradiated with 200 r (Co^{60} source). Sprouting was stopped after 1, 3, 5, 7, 10 and 15 days, the lipids were extracted from the dried

Card 1/3

APPROVED FOR RELEASE: 09/17/2001 CIA-RDP86-00513R000614220016-9"

"APPROVED FOR RELEASE: 09/17/2001 CIA-RDP86-00513R000614220016-9

ACCESSION NR: AP4033720

seeds with petroleum ether and then treated for chromatography. The lipid composition of maturing and mature seeds is reported for various varieties, change and expenditure of stored lipids in irradiated and non-irradiated sprouting seeds. The findings are discussed and compared with those of other authors. The triglyceride fatty acid composition of maturing cottonseed (C-1622) did not change markedly between the 30th and 80th day after fertilization. Cottonseed varieties differing in the length of their vegetative period had almost the same fatty acid and triglyceride composition. Germination had a marked effect on the total fatty acid composition; changes appeared while half the store was still in existence. Expenditure of stored lipids was not influenced by irradiation. The following classes of lipids were found in the developing seedling: free fatty acids, unidentified lipids (appearing on the 10th day), triglycerides and sterol esters. The free fatty acids, probably produced by enzymatic hydrolysis of phospholipids, were hardly influenced by the gamma rays. Sprouting caused decrease in palmitic and increase in oleic and stearic acids. A small amount of myristic and palmitoleic acid was always found. There was interconversion between oleic, linoleic and linolenic acid, and linoleic acid decreased while linolenic appeared for the first time. The metabolism of the complex fatty acid esters and sterols proved resistant to irradiation. Irradiation of swelling seeds before sprouting had a pronounced

Card 2/3

APPROVED FOR RELEASE: 09/17/2001 CIA-RDP86-00513R000614220016-9"

"APPROVED FOR RELEASE: 09/17/2001 CIA-RDP86-00513R000614220016-9

ACCESSION NR: AP4033720

effect on the direction and speed of interconversion and synthesis of the triglyceride fatty acids, as well as on triglyceride synthesis itself. More linoleic was converted into linolenic acid and the speed of interconversion was increased. Without irradiation the newly synthesized linolenic acid formed mainly trilinolenin and linoleodilinolenin, with irradiation mainly (unstable) triglycerides with 7 double bonds. Orig. art. has: 5 tables, 4 figures and 8 formulas.

ASSOCIATION: Institut fiziologii rasteniy Akademii nauk SSSR, Moskva (Institute of Plant Physiology, Academy of Sciences, SSSR, Moscow)

SUBMITTED: 06Jul63 DATE ACQ: 07May64 ENCL: 00

SUB CODE: LS NO REF SOV: 004 OTHER: 014

Card 3/3

APPROVED FOR RELEASE: 09/17/2001 CIA-RDP86-00513R000614220016-9"

"APPROVED FOR RELEASE: 09/17/2001 CIA-RDP86-00513R000614220016-9

GANIYEVA, M.; RAKHMANOV, R.R.

60

Effect of the presowing treatment of cotton seed with Co gamma rays on its chemical composition and the yield of raw cotton. Uzb. biol. zhur. 9 no. 6:5-9 '65 (MIRA 19:1)

1. Institut eksperimental'noy biologii rasteniy AN UzSSR. Submitted May 15, 1964.

APPROVED FOR RELEASE: 09/17/2001 CIA-RDP86-00513R000614220016-9"

"APPROVED FOR RELEASE: 09/17/2001 CIA-RDP86-00513R000614220016-9

GANIYEVA, M.R.

[Dieseases of mulberry silkworm; textbook for the students of agricultural technical schools] Tut ipak kurti kasalliklari va zararkunandalari; kishlok khuzhaligi tekhnikumlari uchun ukuv kullanma. Toshkent, Urta va olin maktab, 1963. 59 p. [In Uzbek] (MIRA 17:10)

APPROVED FOR RELEASE: 09/17/2001 CIA-RDP86-00513R000614220016-9"

"APPROVED FOR RELEASE: 09/17/2001 CIA-RDP86-00513R000614220016-9

GANI-ZADE, N.K.; MANAFOV, M.I.

Effect of well diameter on the economic effectiveness of drilling.
Azerb. neft. khoz. 37 no.7:47-48 Jl '58. (MIRA 11:9)
(Oil well drilling)

APPROVED FOR RELEASE: 09/17/2001 CIA-RDP86-00513R000614220016-9"

"APPROVED FOR RELEASE: 09/17/2001 CIA-RDP86-00513R000614220016-9

GANI-ZADE, N.K.; MANAFOV, M.I.

Amortization in the petroleum industry. Azerb.neft.khoz. 37 no.10:46-48 O '58. (MIRA 12:2)
(Amortization)

APPROVED FOR RELEASE: 09/17/2001 CIA-RDP86-00513R000614220016-9"

"APPROVED FOR RELEASE: 09/17/2001 CIA-RDP86-00513R000614220016-9

GANI-ZADE, N.K.; MANAFOV, M.I.

"Simplifying and improving the record system of incomplete production at petroleum machinery manufacturing plants." Azerb. neft. khoz. 37 11:46-47 N '58. (MIRA 12:3)

(Petroleum industry--Equipment and supplies)

APPROVED FOR RELEASE: 09/17/2001 CIA-RDP86-00513R000614220016-9"

"APPROVED FOR RELEASE: 09/17/2001 CIA-RDP86-00513R000614220016-9

MANAFOV, M.I.; GANIZADE, N.K.

Determining the economic effectiveness of capital investments in the petroleum production industry. Azerb.neft.khoz. 38 no.12: 44-46 D'59. (MIRA 13:10)
(Capital investments) (Petroleum industry)

APPROVED FOR RELEASE: 09/17/2001 CIA-RDP86-00513R000614220016-9"

"APPROVED FOR RELEASE: 09/17/2001 CIA-RDP86-00513R000614220016-9

MANAFOV, M.I.; GANI-ZADE, N.K.

Determining the economic effectiveness of capital investments in the oil field industry. Azerb. neft. khoz. 39 no.2:42-44 F '60. (MIRA 14:8)

(Oil fields—Production methods)

APPROVED FOR RELEASE: 09/17/2001 CIA-RDP86-00513R000614220016-9"

"APPROVED FOR RELEASE: 09/17/2001 CIA-RDP86-00513R000614220016-9

MANAFOV, M.I.; GANI-ZADE, N.K.

Planning the introduction of new techniques in the petroleum industry. Azerb. neft. khoz. 40 no.1:45-46 Ja '61. (MIRA 14:8)

(Oil fields--Production methods)

APPROVED FOR RELEASE: 09/17/2001 CIA-RDP86-00513R000614220016-9"

"APPROVED FOR RELEASE: 09/17/2001 CIA-RDP86-00513R000614220016-9

MANAFOV, M.I.; GANI-ZADE, N.K.; MUSTAFAYEV, M.M.

Economic effectiveness of large-block reinforced concrete bases for oil and gas derricks. Azerb.neft.khoz. 41 no.2:46-48 F '62. (MIRA 15:8)

(Oil well drilling rigs)
(Reinforced concrete construction)

APPROVED FOR RELEASE: 09/17/2001 CIA-RDP86-00513R000614220016-9"

"APPROVED FOR RELEASE: 09/17/2001 CIA-RDP86-00513R000614220016-9

GANI-ZADE, R.A., otv. red.

[Supplementary catalog of estimates for basic building materials, products, intermediate products and structural elements for Baku, Kirovabad, and nineteen zones of the Azerbaijan S.S.R., determined by local conditions] Dopolnitel'nyi katalog smetnykh tsen osnovnykh stroitel'nykh materialov, izdelii, polufabrikatov i konstruktsii po g.g.Baku, Kirovabad i 19-ti zonam Azerbaidzhanskoi SSR, priviazannykh k mestnym usloviiam. Baku, 1960. 9 p. (MIRA 16:4)

1. Azerbaijan. Gosudarstvennyy komitet po delam stroitel'stva i arkhitektury.
(Azerbaijan—Precast concrete—Estimates)

APPROVED FOR RELEASE: 09/17/2001 CIA-RDP86-00513R000614220016-9"

"APPROVED FOR RELEASE: 09/17/2001 CIA-RDP86-00513R000614220016-9

GANI-ZADE, R.A., otv. red.

[Standard district estimates for construction and assembly work for construction projects of the first and second groups in Baku, Kirovabad, and nineteen zones of the Azerbaijan S.S.R.; adapted to local conditions and in the new price scale] Sbornik edinykh raionnykh edinichnykh rastsenok na stroitel'no-montazhnye raboty dlia stroek pervoi i vtoroi grupp po g.g.Baku, Kirovabad i 19-ti zonam Azerbaidzhanskoi SSR, priviazannykh k mestnym usloviiam v novom masshtabe tsen. Baku. Razdel 1 - 5. 1961. 25 p. Razdel 5. D. 1961. 39 p. Razdel 7. 7-D, 17-D, PP i SKh. 1961. 37 p. Razdel 13-a. [Landscape gardening]Raboty po ozeleneniiu. 1960. 19 p. (MIRA 16:4)

1. Azerbaijan. Gosudarstvennyy komitet po delam stroitel'stva i arkhitektury.

(Azerbaijan--Building--Estimates)

APPROVED FOR RELEASE: 09/17/2001 CIA-RDP86-00513R000614220016-9"

"APPROVED FOR RELEASE: 09/17/2001 CIA-RDP86-00513R000614220016-9

GANI-ZADE, R.A., otv. red.

[Standard district estimates for construction work, determined by local conditions of construction projects for the first and second groups of construction projects in Baku and Kirovabad and nineteen zones of the Azerbaijan S.S.R.] Sbornik edinykh raionnykh edinichnykh rastsenok na stroitel'nye raboty, priviazannykh k mestnym usloviiam stroek dlia pervoi i vtoroi grupp stroek po g.g.Baku, Kirovabad i 19-ti zonam Azerbaidzhanskoi SSR. Baku, 1960. 17 p. (MIRA 16:3)

1. Azerbaijan. Gosudarstvennyy komitet po delam stroitel'stva i arkhitektury.
(Azerbaijan--Bridges--Estimates)
(Azerbaijan--Culverts--Estimates)

APPROVED FOR RELEASE: 09/17/2001 CIA-RDP86-00513R000614220016-9"

"APPROVED FOR RELEASE: 09/17/2001 CIA-RDP86-00513R000614220016-9

GAN'KA, Ladislav (Praga)

Development of the electric industry in Czechoslovakia.
Elektrichestvo no.10:72-77 O '60. (MIRA 14:9)
(Czechoslovakia--Electric industry)

APPROVED FOR RELEASE: 09/17/2001 CIA-RDP86-00513R000614220016-9"

"APPROVED FOR RELEASE: 09/17/2001 CIA-RDP86-00513R000614220016-9

GANKE, A.A.

Needed book ("Production of pressed sugar." I.F.Zelikman, F.A. Demchinskii. Reviewed by A.A.Ganke). Sakh.prom. 29 no.7:46-47 '55. (MLRA 9:1)
(Sugar industry) (Zelikman, I.F.) (Demchinskii, F.A.)

APPROVED FOR RELEASE: 09/17/2001 CIA-RDP86-00513R000614220016-9"

"APPROVED FOR RELEASE: 09/17/2001 CIA-RDP86-00513R000614220016-9

GANKE, Ye.V., inzh.

Arrangement in pairs of the TSDK-4 machine tools. Der.prom. 8 no.3:21 Mr '59. (MIRA 12:4)

1. Ul'yanovskoye oblastnoye upravleniye mebel'noy i derevoobrabatyvayushchey promyshlennosti.
(Furniture industry)

APPROVED FOR RELEASE: 09/17/2001 CIA-RDP86-00513R000614220016-9"

"APPROVED FOR RELEASE: 09/17/2001 CIA-RDP86-00513R000614220016-9

USSR/Plant Physiology Growth and development H-5

Abs Jour : Referat. Zh - Biol., No 6, 25 March 1957, 22399

Author : Sperrou, A.G., Gankel, Dzh. E.
Inst : Not given
Title : The effect of prolonged irradiation by cobalt gamma-rays on plant development.

Orig Pub : V sb.: Primenenie radioaktivnikh izotopov v prom-sti, meditsine i s. kh., M., AN SSSR, 1956, 490-509

Abstract : For study of the effect of γ-rays on plants the Brookhaven Laboratory (USA) used in nurseries a source with 1.5-4 curies intensity, and on fields of 1 and 3.5 hectares - a source with 16-1800 curies intensity. The plant irradiation was conducted during 20 hours of the 24; the remaining 4 hours were spent in care of plants and observation. Plants with very large chromosomes are p rticularly ensitive to irradiation. Polyploid species within the same family are less sensitive than diploids. Under some irradiation dosages a growth stimulation was observed in the garden snapdragon (Anthirrhinum majus) and hybrid Nicotiana glauca x.N. Langsdorffii. The morphological changes in roots, stems, leaves, buds and flowers are de-

Card 1/2 -26-

APPROVED FOR RELEASE: 09/17/2001 CIA-RDP86-00513R000614220016-9"

"APPROVED FOR RELEASE: 09/17/2001 CIA-RDP86-00513R000614220016-9

USSR/Plant Physiology Growth and development H-5

Abs Jour : Referat. Zh - Biol., No 6, 25 March 1957, 22399

scribed which occur under the influence of prolonged irradiation of plants by γ-rays. A prolonged irradiation caused a more active development of tumors in the hybrid Nicotiana glauca x N. Langsdorffii. A delay in germination of some vegetables under the influence of irradiation has a practical significance in agriculture. In potatoes this was attained by irradiating tubers with γ-rays with an intensity of 10,000-20,000 r, in sweet Spanish onions with a dose of 4,000 r. The irradiation of potatoes with 20,000 r stopped the multiplication of golden nematodes. Attention is called to the theoretical significance of studying processes occuring in plants under irradiation. Bibl. 36 refs.

Card 2/2 -27-

APPROVED FOR RELEASE: 09/17/2001 CIA-RDP86-00513R000614220016-9"

"APPROVED FOR RELEASE: 09/17/2001 CIA-RDP86-00513R000614220016-9

GANKEVICH, F.

SHLEYFER, L., inzhener; BYKHOVSKIY, G., inzhener; GANKEVICH, F., inzhener.

Loading machinery in the new Stalin five-year plan. Mor.flot 7 no.7:5-8 Jl '47. (MLRA 9:6)
(Loading and unloading)

APPROVED FOR RELEASE: 09/17/2001 CIA-RDP86-00513R000614220016-9"

"APPROVED FOR RELEASE: 09/17/2001 CIA-RDP86-00513R000614220016-9

GANKEVICH, F.

SHLEYFER, L.; BOLKHOVSKOY, G.; GANKEVICH, F.

Loading machinery in the new Stalin five-year plan. Mor.flot 7 no.9:5-10 S '47. (MLRA 9:6)
(Loading and unloading) (Cranes, derricks, etc.)

APPROVED FOR RELEASE: 09/17/2001 CIA-RDP86-00513R000614220016-9"

"APPROVED FOR RELEASE: 09/17/2001 CIA-RDP86-00513R000614220016-9

GANKEVICH, G.A., mladshiy nauchnyy sotrudnik

Some changes in hemopoiesis in radiation sickness and its treatment. Akt.vop.perel.krovi no.6:95-104 '58. (MIRA 13:1)

1. Radiobiologicheskaya laboratoriya Leningradskogo instituta pereli-vaniya krovi (zav. - kand.med.nauk G.M. Murav'yev).
(RADIATION SICKNESS) (HEMOPOIETIC SYSTEM)

APPROVED FOR RELEASE: 09/17/2001 CIA-RDP86-00513R000614220016-9"

"APPROVED FOR RELEASE: 09/17/2001 CIA-RDP86-00513R000614220016-9

KLIMOVA, K.N.; GANKEVICH, G.A.

Problem of bone marrow norms. Akt.vop.perel.krovi no.7:67-69 '59. (MIRA 13:1)

(MARROW--ANALYSIS) (BLOOD DONORS)

APPROVED FOR RELEASE: 09/17/2001 CIA-RDP86-00513R000614220016-9"

"APPROVED FOR RELEASE: 09/17/2001 CIA-RDP86-00513R000614220016-9

FILATOV, A.N., prof.; GANKEVICH, G.A., nauchnyy sotrudnik; TEODOROVICH, V.P., starshiy nauchnyy sotrudnik

Experimental studies on the reproduction and prevention of gastric ulcer in dogs. Akt.vop.perel.krovi no.7:228-242 '59. (MIRA 13:1)

1. Chlen-korrespondent AMN SSSR (for Filatov).
(PEPTIC ULCER) (CINCHOPHEN)

APPROVED FOR RELEASE: 09/17/2001 CIA-RDP86-00513R000614220016-9"

"APPROVED FOR RELEASE: 09/17/2001 CIA-RDP86-00513R000614220016-9

GANKEVICH, G.A., nauchnyy sotrudnik

Immunotransfusions in radiation sickness. Akt.vop.perel.krovi no.7: 372-375 '59. (MIRA 13:1)

1. Laboratoriya radiobiologii (zav. laboratoriyey - starshiy nauchnyy sotrudnik G.M. Murav'yev) Leningradskogo instituta perelivaniya krovi.
(RADIATION SICKNESS) (ZYMOSAN--THERAPEUTIC USE)

APPROVED FOR RELEASE: 09/17/2001 CIA-RDP86-00513R000614220016-9"

"APPROVED FOR RELEASE: 09/17/2001 CIA-RDP86-00513R000614220016-9

GANKEVICH, I., mayor

Young communits are studing. Komm. Vooruzh. Sil 3 no.18:68 S '63. (MIRA 16:10)

(Russia—Armed Forces—Political activity)

APPROVED FOR RELEASE: 09/17/2001 CIA-RDP86-00513R000614220016-9"

"APPROVED FOR RELEASE: 09/17/2001 CIA-RDP86-00513R000614220016-9

GANKEVICH, K. M.

Transporting bees for the honey flow. Pchelovodstvo 29, No 8, 1952.

APPROVED FOR RELEASE: 09/17/2001 CIA-RDP86-00513R000614220016-9"

"APPROVED FOR RELEASE: 09/17/2001 CIA-RDP86-00513R000614220016-9

GANKEVICH, K.M.

USSR/Farm Animals. Honey Bee Q-6

Abs Jour : Ref Zhur - Biol., No 8, 1958, No 35770

Author : Gankevich K.M.
Inst : ~~Not Given~~
Title : The Problem of Warming the Honey Bee Nests (Utepleniye pchelinykh gnezd na zimu)

Orig Pub : Pchelovodstvo, 1957, No 9, 11-13

Abstract : A number of cases are adduced, where honey bees wintered well at large in the Krasnodar region in hives without any warming device from above or at the sides of the nest.

Card : 1/1

APPROVED FOR RELEASE: 09/17/2001 CIA-RDP86-00513R000614220016-9"

"APPROVED FOR RELEASE: 09/17/2001 CIA-RDP86-00513R000614220016-9

GANKEVICH, L. (Engr.-Col.)

"New Detail in Equipping an Antiaircraft Firing Center"

Voyennyy Vestnik, No. 7, 1954

APPROVED FOR RELEASE: 09/17/2001 CIA-RDP86-00513R000614220016-9"

"APPROVED FOR RELEASE: 09/17/2001 CIA-RDP86-00513R000614220016-9

GANKEVICH, L., inzh.-polkovnik.

Cleaning caterpillar tracks. Tankist no.5:58 My '58. (MIRA 11:6)
(Tanks (Military science))

APPROVED FOR RELEASE: 09/17/2001 CIA-RDP86-00513R000614220016-9"

"APPROVED FOR RELEASE: 09/17/2001 CIA-RDP86-00513R000614220016-9

GANKEVICH, T.TS., inzhener (g. Chardzhou).

Mechanical adjustment of the bearing block of Diesel locomotive engines. Zhel.dor.transp. 37 no.1:80 Ja '56. (MLRA 9:3)
(Diesel locomotives)

APPROVED FOR RELEASE: 09/17/2001 CIA-RDP86-00513R000614220016-9"

"APPROVED FOR RELEASE: 09/17/2001 CIA-RDP86-00513R000614220016-9

GANKEVICH, T.TS., inzhener (st. Chardzhou)

Stand for washing diesel locomotive cooler parts. Elek. i tepl. tiaga no.2:43 F '57. (MLRA 10:5)
(Diesel locomotives)

APPROVED FOR RELEASE: 09/17/2001 CIA-RDP86-00513R000614220016-9"

"APPROVED FOR RELEASE: 09/17/2001 CIA-RDP86-00513R000614220016-9

GONCHAROV, Yuriy Grigor'yevich, inzh.; GANKEVICH, Tadeush TSezarevich, inzh.; PETROV, Vladimir Yegorovich, inzh.; SHAMANOV, L.G., inzh., retsenzent; IVANIK, V.F., inzh., retsenzent; VUL'F, V.V., inzh., red.; KHITROV, P.A., tekhn. red.

[Operation and maintenance of a diesel locomotive] Upravlenie teplovozom i ego obslukhivanie. Moskva, Vses. izdatel'sko-poligr. ob"edinenie M-va putei soobshcheniia, 1961. 180 p. diagr. (MIRA 14:8)
(Diesel locomotives)

APPROVED FOR RELEASE: 09/17/2001 CIA-RDP86-00513R000614220016-9"

"APPROVED FOR RELEASE: 09/17/2001 CIA-RDP86-00513R000614220016-9

GANKEVICH, V.; VASHATOVSKIY, V. (Leningrad)

A creative laboratory. Okhr. truda i sots. strakh. 3 no.8:46-49 Ag '60. (MIRA 13:9)

(Leningrad--Machinery industry--Hygienic aspects)

APPROVED FOR RELEASE: 09/17/2001 CIA-RDP86-00513R000614220016-9"

"APPROVED FOR RELEASE: 09/17/2001 CIA-RDP86-00513R000614220016-9

PETRUKOVICH, A.A., kand.tekhn.nauk (Gomel'); TARTAKOVSKIY, R.N., kand.-tekhn.nauk (Gomel'); SMYKOV, Ye.K., kand.tekhn.nauk (Gomel'); LIPSKIY, M.V., dotsent (Gomel'); LIZOGUB, I.G., starshiy prepodavatel' (Gomel'); GANKEVICH, V.I. (Gomel'); PETROV, A.G. (Gomel'); ANAMENSKIY, ~~P.I. (Gomel')~~

"The railroad track" by G.M.Shakhuniants. Reviewed by A.A. Petrukovich and others. Zhel.dor.transp. 44 no.4:95-96 Ap '62. (MIRA 15:4)

1. Zamestitel' nachal'nika Belorusskoy dorogi (for Gankevich).
2. Nachal'nik sluzhby puti Belorusskoy dorogi (for Petrov).
3. Glavnyy inzh. sluzhby puti Belorusskoy dorogi (for Znamenskiy).

(Railroads--Track)
(Shakhuniants, G. M.)

APPROVED FOR RELEASE: 09/17/2001 CIA-RDP86-00513R000614220016-9"

"APPROVED FOR RELEASE: 09/17/2001 CIA-RDP86-00513R000614220016-9

ACC NR: AP6029698 SOURCE CODE: UR/0413/66/000/015/0060/0060

INVENTORS: Gankin, I. A.; Loykin, I. V.; Gorodotskiy, M. A.; Romm, I. M.

ORG: none

TITLE: A multichannel device for controlling the closing reliability of contacts. Class 21, No. 184352 [announced by Leningrad Industrial Society "Krasnaya Zarya" (Leningradskoye proizvodstvennoye ob"yedineniye "Krasnaya zarya")]

SOURCE: Izobret prom obraz tov zn, no. 15, 1966, 60

TOPIC TAGS: circuit reliability, electric switch, resistance bridge

ABSTRACT: This Author Certificate presents a multichannel device for controlling the closing reliability of contacts of low voltage electric equipment. The device provides for recording the failure associated with the increase of the junction resistance of the contacts being tested above an established limit. The device includes the test contacts, a power supply source for the test contacts, load resistances in the contact circuits, transistorized amplifiers with a source of stabilized voltage bias, a threshold sensing element, and a unit for recording the failures (see Fig. 1). The design increases the precision and stability of the device and makes it possible to reset simultaneously the recording threshold of all channels. The threshold sensing element of the device is made in the form of a bridge

Card 1/3 UDC: 621.318.56.066.6.087-752

APPROVED FOR RELEASE: 09/17/2001 CIA-RDP86-00513R000614220016-9"

"APPROVED FOR RELEASE: 09/17/2001 CIA-RDP86-00513R000614220016-9

L 10310-67

ACC NR: AP6029898

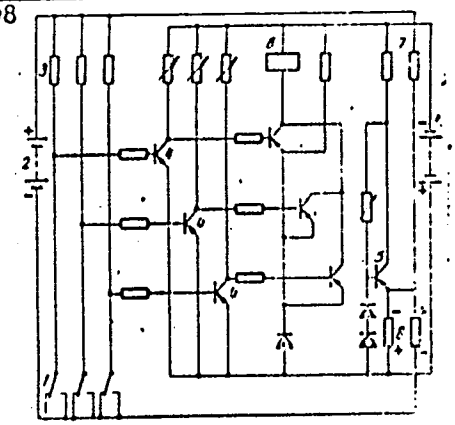

Fig. 1. 1 - test contacts; 2 - power supply source; 3 - load resistances; 4 - amplifiers; 5 - source of stabilized voltage; 6 - recording unit; 7 - resistance equal to the load resistance; 8 - resistance equal to the established limiting value of the junction resistance

with one arm comprised of a load resistance and the test contact of each channel. The other arm of the bridge is comprised of a divider consisting of a resistance equal to the load resistance and of a resistance equal to the established limiting value of the junction resistance. The power supply source of the test contacts is connected to one of the diagonals of the bridge. The amplifiers (made with transistors) are connected to the appropriate diagonals of each of the channels. To reduce the mutual influence of the separate channels on the recording threshold of each channel with a distinct magnitude of the junction resistance of the test contacts, the recording unit is connected to the amplifiers through buffer stage transistors. To reduce the influence of the amplifier on the conditions of the test contacts and to protect the

Card 2/3

APPROVED FOR RELEASE: 09/17/2001 CIA-RDP86-00513R000614220016-9"

"APPROVED FOR RELEASE: 09/17/2001 CIA-RDP86-00513R000614220016-9

L 30770-67

ACC NR: AP6029893

transistors of the amplifier when an increased voltage is fed to the test contacts, a diode is connected between the amplifier and the test contact of each channel. The diode obtains its voltage bias from an auxiliary power supply source. Orig. art. has: 1 figure.

SUB CODE: 09/ SUBM DATE: 12Mar65

Card 3/3

APPROVED FOR RELEASE: 09/17/2001 CIA-RDP86-00513R000614220016-9"

"APPROVED FOR RELEASE: 09/17/2001 CIA-RDP86-00513R000614220016-9

BOROVKOV, G.S.; GANKIN, I.V.

Mechanized production line for the finishing of raw cloth at silk factories. Biul.tekh.-ekon.inform. no.10:54-55 '58. (MIRA 11:12)

(Silk manufacture)

APPROVED FOR RELEASE: 09/17/2001 CIA-RDP86-00513R000614220016-9"

"APPROVED FOR RELEASE: 09/17/2001 CIA-RDP86-00513R000614220016-9

GANKIN, I.V.

Economic efficiency of production lines in dying and finishing shops of the silk industry. Biul.tekh.-ekon.inform.Gos.nauch.-issl.inst.nauch.i tekh.inform. no.2:61-63 '63. (MIRA 16:2)
(Dyes and dyeing--Silk) (Machinery, Automatic)

APPROVED FOR RELEASE: 09/17/2001 CIA-RDP86-00513R000614220016-9"

"APPROVED FOR RELEASE: 09/17/2001 CIA-RDP86-00513R000614220016-9

GANKIN, Mark

Let's talk about your snapshots. Sov.foto 20 no.8:20 Ag '60. (MIRA 13:8)

1. Fotokorrespondent zhurnala "Sovetskaya zhenshchina".
(Photography)

APPROVED FOR RELEASE: 09/17/2001 CIA-RDP86-00513R000614220016-9"

"APPROVED FOR RELEASE: 09/17/2001 CIA-RDP86-00513R000614220016-9

GANKIN, M. Z., Engineer

"The Selection of Parameters of Automatic Regulation of Linear Systems With the Aid of a D-Pulse Curve." Cand Tech Sci, Moscow Order of Lenin Power Engineering Inst imeni V. M. Lomonosov, 17 Dec 54. (VM,8 Dec 54)

Survey of Scientific and Technical Dissertations Defended at USSR Higher Educational Institutions (12)
SO: Sum. No. 556, 24 Jun 55

APPROVED FOR RELEASE: 09/17/2001 CIA-RDP86-00513R000614220016-9"

"APPROVED FOR RELEASE: 09/17/2001 CIA-RDP86-00513R000614220016-9

GANKIN, M. Z.

99-5-4/11

AUTHOR: Beglyarov, S.A., Engineer, Gankin, M.Z., Candidate of Mechanical Sciences, Kondrat'yev, V.V., Engineer

TITLE: Selection of Type for Drainage Canal Pumping Stations (Tipovoye proyektirovaniye melioralivnykh nasosnykh stantsiy na kanalakh)

PERIODICAL: Gidrotekhnika i Melioratsiya, 1957, # 5, p 23-32 (USSR)

ABSTRACT: In 1955 and 1956 the USSR Ministry of Agriculture selected 11 types of pumping stations for irrigation systems, and 2 types for drainage systems. The capacities of the pumps ranged from 100 liter/sec to 6 cu m/sec with manometric pressures up to 30 m, to be installed at canals with variations of water levels up to 2 m. For pumps with up to 150 kw power input, asynchronous, squirrel cage motors of the series "A", "AO" and "ГАМ-6" for vertical and horizontal assembly were used; for pumps with a power input of 150 - 300 kw synchronous low-voltage motors of the type "ДС", and for pumps with a power input exeeding 300 kw high voltage motors (6,000 v) of the types "ДС"and "МС" were used. Giprovodkhoz endeavored to standardize as much as possible the construction of the pumping units as well as their components. In 1957, development of 8 new types of pumping stations, of which 7 are to serve for irrigation, and 1 for drainage

Card 1/3

APPROVED FOR RELEASE: 09/17/2001 CIA-RDP86-00513R000614220016-9"

"APPROVED FOR RELEASE: 09/17/2001 CIA-RDP86-00513R000614220016-9

purposes, were planned. Great attention was paid to automatic operation, and provisions were made for mechanization of construction work by applying pre-fabricated reinforced concrete elements. The types and dimensions of pumping station buildings depend on the types of pumps and electric motors used. For axial pumps, buildings of the chamber type with dry or wet chambers are chosen; for rotary pumps with a capacity of 300 liters/sec (pumps of the types "6K-12", "6K-8", "8K-18", "8K-12", "12-Д-19" and "12-НДс") buildings of the water-conducting type and for rotary pumps with a capacity exceeding 30 liters, chamber-type buildings with dry chambers are used. Transformers are either installed inside or outside of the buildings. The selection of the layout as well as the hydromechanical and electric installation of pumping stations was dictated by requirements for efficiency and technical expediency, e.g. minimum capital investments, minimum number of types, and remote-controlled operation of stations. Four technological systems have been developed for pumping stations. For the development of various types of buildings, special attention was paid to the use of prefabricated reinforced concrete structural parts and prefabricated reinforced concrete pipes. The buildings of the

APPROVED FOR RELEASE: 09/17/2001 CIA-RDP86-00513R000614220016-9"

"APPROVED FOR RELEASE: 09/17/2001 CIA-RDP86-00513R000614220016-9

Selection of Type for Drainage Canal Pumping Stations 99-5-4/11

chamber type are designed either as monolithic or prefabricated reinforced concrete constructions. The buildings of the water-conducting type are of more simple construction, without complex and expensive underground chambers. The walls are supported by quarry stone-concrete prefabricated foundations.

This article contains 6 figures and 1 table.

ASSOCIATION: State Planning Institute for Water Supply Installations (Gosudarstvennyy institut po proyektirovaniyu vodokhozyaystvennykh ob"yektov - Giprovodkhoz)

AVAILABLE: Library of Congress

Card 3/3

APPROVED FOR RELEASE: 09/17/2001 CIA-RDP86-00513R000614220016-9"

"APPROVED FOR RELEASE: 09/17/2001 CIA-RDP86-00513R000614220016-9

report to be presented at the 1st Intl Congress of the Intl Federation of Automatic Control, 25 Jun-5 Jul 1960, Moscow, USSR.

BYKHOVSKIY, M. L. - "Ultra stability in electronic calculating devices in the solution of nonlinear equations in indefinite form"

CHECHUNKIN, A. B. - "Use of calculating devices in systems for the automatic control of rolling mills"

CHICHINADZE, V. K. - "Concerning some problems of the organization of self-adjusting and self-teaching systems of automatic control, based on principles of random search"

DAVYDOV, N. I. - "Development of automatic control systems for boiler units"

DUDNIKOV, Ye. G. - "Determination of optimum adjustments of industrial automatic regulation systems according to initial data obtained from experience"

DUR'YE, A. I., and ROZENVASSER, E. N. - "Methods of organizing Lyapunov functions in the theory of nonlinear regulating systems"

DRUZHININ, N. N. - "Balanced regulation and inter-communications of a multi-motor electric drive and technology in continuous rolling mills"

FEL'DBAUM, A. A. - "Problems of statistical theory of automatic optimization systems"

FETISOV, V. I. - "Automation of a reversible cold rolling mill for nonferrous metals"

FILIPPOV, A. F. - "Application of the theory of differential equations with a discontinuous right side to nonlinear problems of automatic regulation"

GAVRILOV, M.A. - "Structural surplus and operational reliability of relay devices"

GAMZIN, M. Z. - "Automation of irrigation systems"

GRUZDEVICH, G. R., KASTELYAN, V. N., KOSTIKOV, M. P., KRYMAN, L. E., and SIRKY, E. S. - "Power regulation of disturbance and problems of the stability of electric power systems"

GUSELNIKOV, S. A. - "Logical method of synthesis of functional converters"

IL'IN, V. A. - "Methods of transmission of information and the structure of telemechanical systems for dispersed structures"

IRGSON, V. L., and LUTSKIY (fnu) - "The code-impulse system of tele-measurement for dispatched operations of trunk-line gas pipe lines"

IVAKHNENKO, A.G. - "Concerning the application of the theory of combined regulation systems for cybernetic adaptation systems"

KARAMURZIN, L. R., and SUTAMBEKOV, G. A. - "A quasi-equilibrated bridge as an element in a system of automatic control"

KAZAKEVICH, V. V. - "Concerning the process of extra regulation of inert objects in the presence of disturbance"

KAZAKOV, I. E. - "Some problems of the theory of statistical linearization and its application"

KELIN, F. M. - "Some problems of the theory of impulse systems with time selectors"

KORNEYCHUK, A. E., BOLSHOVITIN, S. V., VOLKOBOYNIKOV, L.M., KOVR, D. M., POLYAK, E. P., POPOV, B. P., KLAUTSKIY, Ya. L., SYSIN, A. Ya., and TRIFONOV, Ye. S. - "The problem of bio-electric control"

KOLOMIYETS, E.T.. - "New types of photo resistances and their field of use"

KONOSHO, M.I., KLIKYUNOV, B. G., and SEMAKIN, E. A. - "System of automatic control and regulation of blast distribution in the tuyeres of blast furnace"

KORNOUSHIN, E. L. - "Investigation of the dynamics of the hydraulic duct of a copying lathe"

KRASOVSKIY, A. A. - "Dynamics of continuous systems of automatic regulation with extra self-adjustment of corrective devices"

KRASOVSKIY, N. N. - "Concerning the selection of parameters of optimum stability systems"

KRUTKOVO, A. I. - "The dynamics of devices imitating living organisms"

KULEBAKIN, V. S. - "The invariant theory of automatic regulation and control systems"

LAMIN, I. D. - "Pneumatic calculating devices as a means of insuring the reliability of complex automation systems"

LAZAREV, V. G. and NEKRASOVKO, P. P. - "Mechanization of processes of analysis and synthesis of the structure of relay devices"

APPROVED FOR RELEASE: 09/17/2001 CIA-RDP86-00513R000614220016-9"

"APPROVED FOR RELEASE: 09/17/2001 CIA-RDP86-00513R000614220016-9

KROL', E.G., inzh.; KHOKHLOVA, A.N., inzh.; BEGLYAROV, S.A., inzh., rukovoditel' raboty; IGNATYUK, G.L., glavnyy red.; KAGAN, G.S., zamestitel' glavnogo red.; GANKIN, M.Z., red.; DEVILLERS, B.P., red.; ZHEREBTSOV, V.V., red.; ZHUKOV, G.A., red.; KREMER, Ye.S., red.; OFFENGENDEN, S.R., red.; PAVLOV, Ye.L., red.; PETROVSKAYA, I.V., red.; FAYNTSIMMER, V.M., red.; FROG, N.P., red.; CHERNIKEVICH, L.A., red.; SHAPAYEV, A.M., red.

[Special operating conditions of irrigation pumping stations.] Spetsial'nye rezhimy orositel'nykh nasosnykh stantsii. Moskva, Giprovodkhoz, 1964. 136 p. (Moscow. Vsesoiuznyi proektno-izyskatel'skii i nauchno-issledovatel'skii institut Giprovodkhoz. Trudy, no.27). (MIRA 19:1)

1. Nachal'nik otdela nasosnykh stantsiy Vsesoyuznogo gosudarstvennogo proyektno-izyskatel'skogo i nauchno-issledovatel'skogo instituta vodokhozyaystvennogo stroitel'stva (for Beglyarov).

APPROVED FOR RELEASE: 09/17/2001 CIA-RDP86-00513R000614220016-9"

"APPROVED FOR RELEASE: 09/17/2001 CIA-RDP86-00513R000614220016-9

GANKIN, N.

Fruitful cooperation. Sov.profsoiuzy 7 no.4:30 Fe '59. (MIRA 12:5)

1. Zamestitel' predsedatelya pravleniya nauchno-tekhnicheskogo otdela Oktyabr'skoy zheleznoy dorogi.
(Leningrad--Railroads--Employees)

APPROVED FOR RELEASE: 09/17/2001 CIA-RDP86-00513R000614220016-9"

"APPROVED FOR RELEASE: 09/17/2001 CIA-RDP86-00513R000614220016-9

ZIMIN, V.I.; GANKIN, N.B.

Railwaymen of the October Trunk Line in the effort for technological progress. Uch. zap. LIIZHT no.3:106-114 '62. (MIRA 17:3)

1. Glavnyy inzhener Upravleniya Oktyabr'skoy zheleznoy dorogi (for Zimin). 2. Nachal'nik tekhnicheskogo otdela Upravleniya Oktyabr'skoy zheleznoy dorogi (for Gankin).

APPROVED FOR RELEASE: 09/17/2001 CIA-RDP86-00513R000614220016-9"

"APPROVED FOR RELEASE: 09/17/2001 CIA-RDP86-00513R000614220016-9

VOROPAY, A.P.; VYZHEKHOVSKAYA, M.F.; DRUGOV, I.P.; KOMARNITSKIY, Yu.A.; MAKSIMENKO, I.I.; PAVLOVSKIY, V.V.; STEPANOV, D.A.; CHEREDNICHENKO, Ye.T.; GANKIN, N.P., retsenzent; FATEYEV, P.Ya., retsenzent; PESKOV, L.N., red.; DROZDOVA, N.D., tekhn.red.

[Competition for communist labor in railroad transportation] Sorevnovanie za kommunisticheskii trud na zheleznodorozhnom transporte. Moskva, Transzheldorizdat, 1963. 158 p. (MIRA 16:9)

(Socialist competition) (Railroads—Employees)

APPROVED FOR RELEASE: 09/17/2001 CIA-RDP86-00513R000614220016-9"

"APPROVED FOR RELEASE: 09/17/2001 CIA-RDP86-00513R000614220016-9

GANKIN, N.B. (Leningrad); POPOV, V.A., inzh. (Leningrad)

High-speed train traffic on the Oktiabr' Railroad. Zhel. dor. transp. 45 no.6:69-73 Je '63. (MIRA 16:7)

1. Nachal'nik tekhnicheskogo otdela Oktyabr'skoy dorogi (for Gankin).

(Railroads--Train speed)

APPROVED FOR RELEASE: 09/17/2001 CIA-RDP86-00513R000614220016-9"

"APPROVED FOR RELEASE: 09/17/2001 CIA-RDP86-00513R000614220016-9

LEMESHCHUK, [illegible] (Leningrad); GANKIN, N.B. (Leningrad)

Prospects for high-speed traffic. Zhel. dor. transp. 47 no.7:7-11 Jl '65. (MIRA 18:7)

1. Nachal'nik Oktyabr'skoy dorogi (for Lemeshchuk). 2. Zamestitel' glavnogo inzhenera Oktyabr'skoy dorogi (for Gankin).

APPROVED FOR RELEASE: 09/17/2001 CIA-RDP86-00513R000614220016-9"

"APPROVED FOR RELEASE: 09/17/2001 CIA-RDP86-00513R000614220016-9

OPENDIK, Moisey Davidovich; GANKIN, Nikolay Borisovich;
LOMIDZE, G.I., red.

[High-speed traffic of passenger trains; experience of the Oktiabr' Railroad] Skorostnoe dvizhenie passazhirskikh poezdov; opyt Oktiabr'skoi dorogi. Moskva, Transport, 1965. 70 p. (MIRA 18:10)

APPROVED FOR RELEASE: 09/17/2001 CIA-RDP86-00513R000614220016-9"

"APPROVED FOR RELEASE: 09/17/2001 CIA-RDP86-00513R000614220016-9

GANKIN, S. Z

33441
S/064/62/000/001/004/008
B110/B138

5.3400

AUTHORS: Fioshin, M. Ya., Lebedev, I. M., Kazakova, L. I., Gankin, S. Z., Khol'mer, O. M., Gurevich, G. I., Neyman, Ye. Ya.

TITLE: Electrosynthesis of ω-oxypentadecanoic acid

PERIODICAL: Khimicheskaya promyshlennost', no. 1, 1962, 41 - 43

TEXT: ω-oxypentadecanoic acid (I) is produced by "mutual" anodic condensation of ω-acetoxyundecanoic acid (II) and adipic acid monoethyl ester (III), during the electrolysis of an aqueous solution of a mixture of their salts: $CH_3COO(CH_2)_{10}COO^- + {}^-OOC(CH_2)_4COOC_2H_5 \longrightarrow CH_3COO(CH_2)_{14}COOC_2H_5 + 2CO_2$ and then saponification of ethyl ester. The authors wished to obtain better yields by substituting the aqueous by an alcoholic medium, and the Pt anode by PbO_2, magnetite, and graphite anodes. A cylindrical glass electrolyser with cylindrical, Pt anode, perforated Ni cathode and graphite rod anode concentrically arranged, was

Card 1/3

APPROVED FOR RELEASE: 09/17/2001 CIA-RDP86-00513R000614220016-9"

"APPROVED FOR RELEASE: 09/17/2001 CIA-RDP86-00513R000614220016-9

33441
S/064/62/000/001/004/008
B110/B138

Electrosynthesis of...

filled with an alcoholic solution of II, III, potash, and soda. Current intensity, voltage, and temperature were measured, and the electrolysis was concluded when 0.7 - 1.0 ml of 0.1 N KOH solution (phenol phthalein) was used per ml of electrolyte. After distilling C_2H_5OH at 20 mm Hg, the following quantities were fractionated at 2 - 5 mm Hg: (a) 30% at 160°C; (b) 25% at 183°C; and (c) 30% at 183 - 200°C. The (c) substance was the ester of I. ~10% ester was separated from (a) and (b). It was saponified for 2 hrs with a 50% KOH solution in the presence of ethanol, then acidified with HCl, and I was extracted with toluene. With 125 ml C_2H_5OH, 21 g II, 45 g III, and 5 g K_2CO_3, the I yield was 45 - 48% at 10 a/dm^2. As 3.42 times the theoretical amount of current is required with an aqueous solution, the yield, 27% must be appropriately divided: 27/3.42 ≈ 8%. As Pt consumption is 150 g ton the possibility of using PbO_2, magnetite, or graphite was studied. The dependence of yield on electrolysis conditions was studied with nonporous graphite in ethyl and propyl alcohol with 112 g of II, 238 g of III, and 24 g of K_2CO_3 at 60 - 65°C. Yield of I, 48 - 50%, was not dependent on the current

Card 2/3

APPROVED FOR RELEASE: 09/17/2001 CIA-RDP86-00513R000614220016-9"

"APPROVED FOR RELEASE: 09/17/2001 CIA-RDP86-00513R000614220016-9

33441
S/064/62/000/001/004/008
B110/B138

Electrosynthesis of...

intensity in a wide range. Maximum yields were obtained with a II : III ratio of 2 : 1 and 1 : 3 at 12 a/дm^2, 60 - 65°C and a K_2CO_3 concentration of 20 g/liter. Voltage increases rapidly with anode density and decreases with K_2CO_3 concentration. The optimum is 40 - 50 v. With 7 g/liter H_2O, a ratio of II : III = 1 : 3, and at 14 a/дm^2 and 60 - 65°C, the yield is 49.2% decreasing to 35%, with 100 g/liter of H_2O. Optimum yields (49.2% current efficiency) are obtained with ethanol or propanol solutions of 112 g/liter II, 238.6 g/liter III, 24 g/liter K_2CO_3;, 7 g/liter H_2O and anode density of 14 a/дm^2 at 60 - 65°C. If the old solution was replaced when acidity reached 1.2 - 1.4 ml of 0.1 N KOH/ml, yield was 44 - 45% (41.5% current efficiency) at 15 a/дm^2 and 65 - 70°C. Yield was almost doubled by using an alcoholic electrolyte (six times the current efficiency). Part II which is bound as a salt and does not react, can be recycled. The higher energy consumption (voltage increase 3 - 4 times) is compensated by increased current efficiency. There are 4 figures, 1 table, and 3 Soviet references.

Card 3/3

APPROVED FOR RELEASE: 09/17/2001 CIA-RDP86-00513R000614220016-9"

"APPROVED FOR RELEASE: 09/17/2001 CIA-RDP86-00513R000614220016-9

S/133/61/000/006/001/017
A054/A129

AUTHORS: Itskovich, G. M., Gankin, V. B., - Engineers

TITLE: Structure of continuous rimming steel ingots

PERIODICAL: Stal', no. 6, 1961, 505-514

TEXT: The introduction of continuous rimming steel casting on an industrial scale in the Novolipetsk Plant was made possible after an extended investigation in this field, (in the UNRS of the Novo-Tula Plant more than 500 tests were carried out). 90-ton ladles and crystallizing molds 150 x 620, 150 x 770 and 170 x 1,020 mm in cross-section were used in the process. The section of continuously cast ingots depends on the dimensions of the rolling mill used in this plant and therefore it was smaller than that of conventional ingots rolled on blooming or slab mills. The pouring speed depends on the time required for emptying the ladle and on the quality of steel. 170 x 1,020 mm section ingots are poured at a rate of 0.6 m/min, those with a section of 150 x 620 mm at a 0.8 - 0.9 m/min rate, whereas for the conventional ingots the speed of bottom casting is not more than 0.3 m/min. The practice in the plants referred to showed that continuous casting of rimming steel in 200 x 200, 150 x 620,

Card 1/6

APPROVED FOR RELEASE: 09/17/2001 CIA-RDP86-00513R000614220016-9"

"APPROVED FOR RELEASE: 09/17/2001 CIA-RDP86-00513R000614220016-9

S/133/61/000/006/001/017
A054/A129

Structure of continuous rimming steel ingots

150 x 770 and 170 x 1,020 mm section molds takes place at a uniform rimming of the metal without any outbursts and effervescence. The special features of continuous casting are reflected in the structure of rimming steel ingots, mainly on account of the intensity of gas-separation in this process. In the structure of continuous castings there are only three zones instead of five as in conventional castings: an external skin, a zone not developed to any marked extent and containing surface-blow holes, moreover a central zone which is denser than that of standard castings. The special features of continuous casting responsible for this change in the structure of the ingots are: pouring from the top, at a greater speed than usually, into molds having smaller cross section; the downward flow of the molten metal meets a rising flow of gas and metal and this has a regulating effect on the metal circulation, so that it takes place without any turbulence; the initial speed of crystallization is higher, the depth of the liquid phase is also greater and the hydrostatic pressure in the central part of the casting during solidification is higher than for the usual process. The factors which have a very pronounced effect on the quality of rimming steel are the degree of oxidation and the temperature of the metal, because these factors affect the separation of gases and skin formation. By obtaining the optimum degree of oxidation and by improving the construction of the mold walls,

Card 2/6

APPROVED FOR RELEASE: 09/17/2001 CIA-RDP86-00513R000614220016-9"

"APPROVED FOR RELEASE: 09/17/2001 CIA-RDP86-00513R000614220016-9

S/133/61/000/006/001/017
A054/A129

Structure of continuous rimming steel ingots

it is possible to produce a continuous rimming steel ingot with a compact external skin, not containing blow holes, (with a carbon-content of the metal of less than 0.10%). At pouring rates of 0.5 m/min for the Ст.3кп, Ст.4кп (St.3kp, St.4kp) steel ingots of 170 x 1,020, 200 x 1,000, 200 x 1,200 mm and of 0.9 m/min for 200 x 200, 150 x 600 mm sections, the relation between pouring rate and the thickness of the external skin has a linear character. At higher rates than indicated above the width of the external skin sharply decreases most probably due to the decrease in gas-separation, caused by the rise of hydrostatic pressure, whereby the possibility of removing blow holes decreases. The effect of temperature on the structure of the ingot was determined on a casting with a 0.14 - 0.17 carbon content and 0.32 - 0.47% manganese content at a pouring rate of 0.7 m/min. It was found that by increasing the temperature from 1,515 to 1,560°C and above, the thickness of the external skin decreases due to the effect of high temperature on the reaction rate of gas-separation (Fig. 5). By blowing oxygen through the metal during pouring from the ladle the thickness of the external skin can be increased considerably. Thus, the arrangement of surface blowholes can efficiently be controlled at high pouring rates. With regard to the central zone of the casting it was found that the increased depth of the liquid phase (3.5 - 6.3 m) results in crystallization at higher hydrostatic pressure than in the conventional

Card 3/6

APPROVED FOR RELEASE: 09/17/2001 CIA-RDP86-00513R000614220016-9"

"APPROVED FOR RELEASE: 09/17/2001 CIA-RDP86-00513R000614220016-9

process. Due to this fact, the central zone of medium-carbon-containing rimming steel is more dense and blow holes do not develop. At a given section of the ingot and a given pouring rate the density of the central zone depends on the carbon and oxygen content of the metal. The chemical composition of continuous rimming steel ingots displays a greater uniformity than the usual ones, both vertically and horizontally. Any departure from this uniformity, a segregation of elements can only be observed to some extent in the top of the ingot. The distribution of sulfur in the central zone of St.3kp and St.4kp ingots is considerably more uniform than in the conventional ingots. The distribution of elements in the various structural zones of the continuous casting depends to a great extent on the intensity of gas-separation and on the control of the metal-circulation. The higher degree of uniformity in the chemical composition made a reduction of the cropping to 1% possible compared with 8-15% croppings necessary for the conventional castings. Some of the tests (in the "Krasnoye Sormovo" Plant and the Novo-Tula Plant) were carried out with the cooperation of N. A. Nikolayev, V. B. Gankin (from TsNIIChM). There are 16 figures, 1 table and 15 references: 9 Soviet-bloc and 6 non-Soviet-bloc.

ASSOCIATION: TsNIIChM

APPROVED FOR RELEASE: 09/17/2001 CIA-RDP86-00513R000614220016-9"

"APPROVED FOR RELEASE: 09/17/2001 CIA-RDP86-00513R000614220016-9

S/133/62/000/005/004/008
A054/A127

AUTHORS: Itskovich, G.M., Engineer, Zubarev, A.G., Engineer, Gankin, V.B., Engineer, Petrichenko, D.P., Engineer, and Genkin, V.Ya., Engineer

TITLE: The smelting of rimming steel in 80-ton electric furnaces with continuous pouring

PERIODICAL: Stal', no. 5, 1962, 420 - 425

TEXT: The industrial-scale electric smelting of rimming steel is carried out in furnaces with a rated capacity of 80 tons and an actual capacity of 90 - 95 tons, (transformer capacity: 25,000 kW, electrode-diameter: 555 mm, depth of the bath: 1000 mm). Tests have shown that one of the most important conditions of this process is the oxidation of the metal before tapping which determines its uniform rimming in the ingot mold. The oxygen quantity involved in the process depends mainly on the carbon content of the metal and the ferric oxide content of the slag. This, in turn, is conditioned by the quantity of ore added to the charge and the basicity of the slag. For slags with a basicity of 3.0 - 5.0 and at metal temperatures of 1635 - 1645°C, the average value of FeOtotal was 24.1%; [Abstracter's note: subscript total is the translation of the Russian subscript

Card 1/5

APPROVED FOR RELEASE: 09/17/2001 CIA-RDP86-00513R000614220016-9"

"APPROVED FOR RELEASE: 09/17/2001 CIA-RDP86-00513R000614220016-9

S/133/62/000/005/004/008
A054/A127

The smelting of.....

общий - (obshchiy)], at temperatures above 1660°C: 18.2%. To obtain the required oxidation during rimming of the metal three methods were used: a) adding ore, b) with oxygen and ore, c) with oxygen alone. Generally method b) is applied, ensuring quick heating of the bath, a higher oxidation rate of carbon (0.25 - 1.0% C per hour) and a ferric oxide content of the slag of 20.3%. The optimum metal temperature at the beginning of oxygen blowing was found by tests to be 1,570 - 1,580°C. The optimum degree of metal oxidation ensuring a uniform rimming in the mold, can be obtained when the slag contains 15 - 23% FeO_{total} before reduction. Oxidation and rimming can be promoted by adding 50 - 200 g/ton aluminum in the ladle, depending on the carbon content and oxidation of the slag. Desulfuration of the metal takes place most intensively (before slag tapping) at a slag basicity of 2.5 - 3.0. In this case it will be 0.011% of the smelt (average value). When electro-smelting of rimming steel is combined with continuous pouring, the charge must be composed so that the carbon content of the smelting metal is 0.10 - 0.20% higher than prescribed for the given grade. The charge usually consists of 80 tons iron-steel scrap, 5 tons scrap and waste from the converting shops and 5 tons pig iron; the first batch (55 - 65% of the charge) is molten in 1 - 1.5 hours, then 1.5 - 2.5% ore is added to obtain a 13 - 20% FeO_{total} content of the slag, then lime or limestone (4 - 5% or 7 - 8% respective-

Card 2/5

APPROVED FOR RELEASE: 09/17/2001 CIA-RDP86-00513R000614220016-9"

"APPROVED FOR RELEASE: 09/17/2001 CIA-RDP86-00513R000614220016-9

ly) is added to get a slag basicity of 2.5 - 3.0. Pig iron stabilizes the carbon content during smelting and improves desulfuration at the beginning of rimming. Oxygen (98.5 - 99.2% pure) is blown through the bath twice, for 8 - 15 minutes, at a pressure of 10 - 13 atm. The average oxygen consumption per smelt is 3 - 8 m^3/ton. The temperature upon the first oxygen blowing should be over 1560°C, before the second blowing over 1580°C, to prevent over-oxidation of the metal. The composition of steel grades produced by the method is: (in %)

	C	Mn	S	P
Ст.3кп (St.3kp)	0.17	0.40	0.040	0.022
Ст.2кп (St.2kp)	0.11	0.40	0.034	0.012
Ст.1кп (St.1kp)	0.09	0.35	0.035	0.011

Continuous pouring is carried out with double-channel, vertical type equipment, for casting 150 x 620, 150 x 780 and 170 x 1040 mm ingots. Close attention was paid to the ladle-spout lining. The best results were obtained by using for the ladle and intermittent ladle casings with a high aluminum oxide content, which last longer and ensure a controlled flow of a quantity of 90 tons of molten steel. The pouring rates are: for 150 x 620 mm ingots 0.8 - 0.9 m/min, for 150 x 780 mm ingots 0.7 - 0.8 m/min and for 170 x 1040 mm ingots 0.5 - 0.6 m/min. Pouring 90 tons of metal through two channels requires 65 - 70 minutes. The rate of

APPROVED FOR RELEASE: 09/17/2001 CIA-RDP86-00513R000614220016-9"