"APPROVED FOR RELEASE: 03/20/2001 CIA-RDP86-00513R000619310017-3

IVASHIN, Nikolay Antonovich; KNOPP, Lazar' Mikhaylovich; SURGUCHEV, Vasiliy Andreyevich; ZLOBINA, Z.P., red.

[Operation of communication and signaling systems in fire prevention] Ekspluatatsiia pozharnoi sviazi i signalizatsii. Moskva, Stroiizdat, 1964. 170 p. (MIRA 17:12)

APPROVED FOR RELEASE: 03/20/2001 CIA-RDP86-00513R000619310017-3"

"APPROVED FOR RELEASE: 03/20/2001 CIA-RDP86-00513R000619310017-3

IVASHIN, N. N.

"Reorganization of the Cortical Dynamic Stereotype of Locomotion in Dogs of Different Ages After Unilateral Amputation of Both Extremities." Cand Med Sci, Sverdlovsk State Medical Inst, Sverdlovsk, 1953. (RZhBiol, No 4, Feb 55)

SO: Sum. No. 631, 26 Aug 55 - Survey of Scientific and Technical Dissertations Defended at USSR Higher Educational Institutions (14)

APPROVED FOR RELEASE: 03/20/2001 CIA-RDP86-00513R000619310017-3"

"APPROVED FOR RELEASE: 03/20/2001 CIA-RDP86-00513R000619310017-3

IVASHIN, N. G.

Elektrifikatsiia rechnoi obstanovki. [Electrification on river installations] (Vodnyi transport, 1940, no. 4, p. 30-33).
DLC: HE561.R6

SO: Soviet Transportation and Communications, A Bibliography, Library of Congress, Reference department, Washington, 1952, Unclassified.

APPROVED FOR RELEASE: 03/20/2001 CIA-RDP86-00513R000619310017-3"

"APPROVED FOR RELEASE: 03/20/2001 CIA-RDP86-00513R000619310017-3

IVASHIN, N. G. (Eng)

Docks

Higher standard of construction engineering in river transportation. Mech. transp. 12 no. 3, 1952.

9. Monthly List of Russian Accessions, Library of Congress, August 1952, Uncl.

APPROVED FOR RELEASE: 03/20/2001 CIA-RDP86-00513R000619310017-3"

"APPROVED FOR RELEASE: 03/20/2001 CIA-RDP86-00513R000619310017-3

IVASHIN, S.M.

Model for installing electric wire boxes. [Suggested by S.M. Ivashin] Rats. i izobr. predl. v stroi. no.145:19-20 '56. (MLRA 10:3)
(Electric wire)

APPROVED FOR RELEASE: 03/20/2001 CIA-RDP86-00513R000619310017-3"

"APPROVED FOR RELEASE: 03/20/2001 CIA-RDP86-00513R000619310017-3

BELOKON', Anatoliy Prokof'yevich, dotsent, kand.voyennykh nauk, polkovnik zapasa. Prinimali uchastiye: SUKHAREV, kand.voyennykh nauk, polkovnik; RUSSKIKH, V.A., kand.tekhn.nauk, polkovnik; IVASHIN, V.A., kand.tekhn.nauk, polkovnik; BARANIN, B.V., red.; SRIBNIS, N.V., tekhn.red.

[Engineering facilities in the zone of defense of a rifle company] Inzhenernoe oborudovanie raiona oborony strelkovoi roty. Moskva, Voen.izd-vo M-va obor.SSSR, 1960. 250 p. (MIRA 14:3)

(Fortification, Field)

APPROVED FOR RELEASE: 03/20/2001 CIA-RDP86-00513R000619310017-3"

"APPROVED FOR RELEASE: 03/20/2001 CIA-RDP86-00513R000619310017-3

Ivashin, V. G.

3-10-20/30

AUTHORS: Malyshev, A.Ya., Ivashin, V.G., and Babitskiy, B.Ye., Dotsents

TITLE: **Conference on Methods Used in Correspondence Courses** (Metodicheskaya konferentsiya po zaochnomu obucheniyu)

PERIODICAL: Vestnik Vysshey Shkoly, 1957, # 10, 67-69 (USSR)

ABSTRACT: At the end of May of this year the first methodic conference on correspondence training took place at the Belorussian State University. General matters of correspondence training, the structure of lectures, the schedule of surveying and determining lectures were the subjects under discussion.

It was decided that lectures must not exceed 6 hours daily. Works submitted in writing were unsatisfactory, owing to low requirements of teachers and the overburdening of students with such work. The author proposes to eliminate this written work from certain disciplines.

The evaluation of the submitted works was stated to be unsatisfactory as some teachers limit their criticisms into a single phrase without any explanations. The methodics of diploma work, the selection of themes and the connection between student and teacher were dealt with.

Card 1/2

APPROVED FOR RELEASE: 03/20/2001 CIA-RDP86-00513R000619310017-3"

"APPROVED FOR RELEASE: 03/20/2001 CIA-RDP86-00513R000619310017-3

A Methodic Conference on Correspondence Training 3-10-20/30

The organization of consultations and lectures in various places, towns and districts was suggested, as well as the supplementing of the teaching staff.

ASSOCIATION: The Belorussian State University imeni V.I. Lenin (Belorusskiy gosudarstvennyy universitet imeni V.I. Lenina)

AVAILABLE: Library of Congress

Card 2/2

APPROVED FOR RELEASE: 03/20/2001 CIA-RDP86-00513R000619310017-3"

"APPROVED FOR RELEASE: 03/20/2001 CIA-RDP86-00513R000619310017-3

IVASHIN, V.M., inzh

Luganskugol' Combine miners are raising their working tempo. Shakht. stroi. 9 no.2:3-4 F '65. (MIRA 18:4)

1. Normativno-issledovatel'skaya stantsiya kombinata Luganskugol'.

APPROVED FOR RELEASE: 03/20/2001 CIA-RDP86-00513R000619310017-3"

"APPROVED FOR RELEASE: 03/20/2001 CIA-RDP86-00513R000619310017-3

DMITRIYENKO, Yu.I., inzh.; IVASHIN, V.M., inzh.; KUZNETSOV, V.P., inzh.; MATSYUK, M.F., inzh.; YAKOVLEV, N.A., inzh.

The "Lugansk Hour" competition in the mines of Luganskugol' Combine. Ugol' Ukr. 6 no.5:23-26 My '62. (MIRA 15:11)
(Donets Basin--Coal mines and mining)
(Socialist competition)

APPROVED FOR RELEASE: 03/20/2001 CIA-RDP86-00513R000619310017-3"

"APPROVED FOR RELEASE: 03/20/2001 CIA-RDP86-00513R000619310017-3

DMITRIYENKO, Yu.I., inzh.; IVASHIN, V.M., inzh.; MATSYUK, M.F., inzh.; PANIN, G.G., inzh.; SMIRNOV, N.D., inzh.; YAKOVLEV, N.A., inzh.

Ways of increasing the labor productivity of miners at the mines of the "Luganskugol'" Combine. Shakht. stroi. 8 no.2: 2-7 F '64. (MIRA 17:3)

1. Normativno-issledovatel'skaya stantsiya kombinata Luganskugol' (for all, except Yakovlev). 2. Kommunarskiy gorno-metallurgicheskiy institut (for Yakovlev).

APPROVED FOR RELEASE: 03/20/2001 CIA-RDP86-00513R000619310017-3"

"APPROVED FOR RELEASE: 03/20/2001 CIA-RDP86-00513R000619310017-3

S/058/62/000/012/010/048
A160/A101

AUTHORS: Ivashin, V. V., Sipaylov, G. A.

TITLE: The commutation of the supply power of accelerating installations by an ionic-mechanical rectifier

PERIODICAL: Referativnyy zhurnal, Fizika, no. 12, 1962, 6, abstract 12B48 (In collection: "Elektron. uskoriteli", Tomsk, Tomskiy un-t", 1961, 226 - 231)

TEXT: Considered is a diagram of a non-arcing current commutation, on the basis of which a high-voltage switching apparatus for a current of 100 ka (at a tension of 12 - 15 kv) may be built without the use of large saturating chokes. This may be attained by jointly using a mechanical interrupter and a controlled ionic valve.

V. Kanunnikov

[Abstracter's note: Complete translation]

Card 1/1

APPROVED FOR RELEASE: 03/20/2001 CIA-RDP86-00513R000619310017-3"

"APPROVED FOR RELEASE: 03/20/2001 CIA-RDP86-00513R000619310017-3

IVASHIN, V.V., kand. tekhn. nauk; SIPAYLOV, G.A., kand. tekhn. nauk

Arcless switching of large currents. Elektrotekhnika 35 no.9:50-52 S '64. (MIRA 17:11)

APPROVED FOR RELEASE: 03/20/2001 CIA-RDP86-00513R000619310017-3"

"APPROVED FOR RELEASE: 03/20/2001 CIA-RDP86-00513R000619310017-3

IVASHIN, V.V., kand. tekhn. nauk

Commutation of impulse currents with large amplitude and duration. Elektrotekhnika 35 no.11:21-22 N '64.

(MIRA 18:6)

APPROVED FOR RELEASE: 03/20/2001 CIA-RDP86-00513R000619310017-3"

"APPROVED FOR RELEASE: 03/20/2001 CIA-RDP86-00513R000619310017-3

ACC NR: AT7004000 SOURCE CODE: UR/0000/66/000/000/0217/0223

AUTHOR: Sipaylov, G. A.; Ivashin, V. V.

ORG: Tomsk Polytechnic Institute (Tomskiy politekhnicheskiy institut)

TITLE: Circuit for obtaining large impulse power from a shock generator

SOURCE: Mezhvuzovskaya konferentsiya po elektronnym uskoritelyam. 5th, Tomsk, 1964. Elektronnyye uskoriteli (Electron accelerators); trudy konferentsii. Moscow, Atomizdat, 1966, 217-223

TOPIC TAGS: shock generator, electric generator, circuit design

ABSTRACT: Shock-power electromagnetic generators have been little used because of difficult turn-off conditions arising after the passage of the first current half-wave. This article suggests (a) designing the generator in such a way that its first current half-wave has maximum amplitude and duration thanks to the aperiodic component and (b) an arcless breaking of the circuit during the second low-amplitude short-time current half-wave; an amplitude ratio of 10:1 can be achieved. The new switching circuit permits the passage of almost the entire first half-wave current through metal contacts while the second half-wave current

Card 1/2

APPROVED FOR RELEASE: 03/20/2001 CIA-RDP86-00513R000619310017-3"

"APPROVED FOR RELEASE: 03/20/2001 CIA-RDP86-00513R000619310017-3

ACC NR: AT7004000

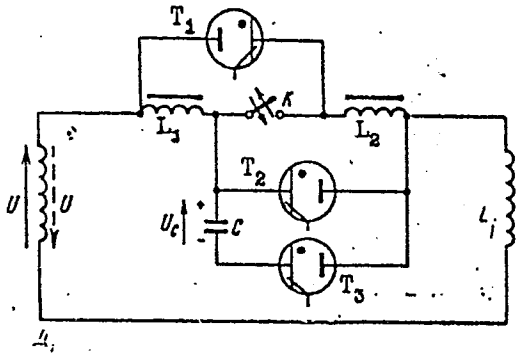

(or a part of it) is transferred to an auxiliary gas discharge tube, which allows the metal contacts to open without load. In the principal circuit (see figure): U - shock generator voltage; K - high-speed contacts; T_1 - tube for generator turn-on; T_2 and T_3 - tubes for generator turn-off; C - switching capacitor; L_1 and L_2 - saturation inductors; L - load inductance. Orig. art. has: 3 figures and 1 formula.

SUB CODE: 09 / SUBM DATE: 06Mar66 / ORIG REF: 008 / OTH REF: 002

Card 2/2

APPROVED FOR RELEASE: 03/20/2001 CIA-RDP86-00513R000619310017-3"

"APPROVED FOR RELEASE: 03/20/2001 CIA-RDP86-00513R000619310017-3

ACC NR: AT7004001 SOURCE CODE: UR/0000/66/000/000/0224/0229

AUTHOR: Sipaylov, G. A.; Ivashin, V. V.; Khor'kov, K. A.

ORG: Scientific Research Institute of Nuclear Physics, Electronics, and Automation, Tomsk Polytechnic Institute (Nauchno-issledovatel'skiy institut yadernoy fiziki, elektroniki i avtomatiki pri TPI)

TITLE: Shock generator as an energy source and storage

SOURCE: Mezhvuzovskaya konferentsiya po elektronnym uskoritelyam. 5th, Tomsk, 1964. Elektronnyye uskoriteli (Electron accelerators); trudy konferentsii. Moscow, Atomizdat, 1966, 224-229

TOPIC TAGS: shock generator, electric generator, capacitor

ABSTRACT: Various methods of storing energy — in capacitors, inductors, electromagnetic machines, batteries — are briefly reviewed and their applicability is discussed (R. Curruthers, Proc. IEE, A-106, no. 2, 166, 1959). The authors' scheme of arcless circuit breaking of a shock electromagnetic generator (see

APPROVED FOR RELEASE: 03/20/2001 CIA-RDP86-00513R000619310017-3"

"APPROVED FOR RELEASE: 03/20/2001 CIA-RDP86-00513R000619310017-3

ACC NR: AT7004001

Abstract AT6004000) is held capable of solving the main problem of using these generators when the stored energy is over 100 j. Design formulas that connect the required load energy with the Arnold machine constant, electromagnetic energy and kinetic energy per unit of rotor volume, and a utilization factor are deduced. Numerical examples show that impulses up to 20 Mj for a duration up to 0.04 sec are feasible. The shock electromagnetic generator operating jointly with a capacitor bank promises still higher usable energies. Orig. art. has: 8 formulas and 2 tables.

SUB CODE: 09 / SUBM DATE: 06Mar66 / ORIG REF: 006 / OTH REF: 002

Card 2/2

APPROVED FOR RELEASE: 03/20/2001 CIA-RDP86-00513R000619310017-3"

"APPROVED FOR RELEASE: 03/20/2001 CIA-RDP86-00513R000619310017-3

ACC NR: AT7004002 SOURCE CODE: UR/0000/66/000/000/0240/0248

AUTHOR: Ivashin, V. V.; Pereverzev, A. G.; Sinitsyn, A. V.; Sipaylov, G. A.

ORG: Scientific Research Institute of Nuclear Physics, Electronics, and Automation, Tomsk Polytechnic Institute (Nauchno-issledovatel'skiy institut yadernoy fiziki, elektroniki i avtomatiki pri TPI)

TITLE: Producing quasi-triangular and quasi-trapezoidal high-power current impulses in inductive loads

SOURCE: Mezhvuzovskaya konferentsiya po elektronnym uskoritelyam. 5th, Tomsk, 1964. Elektronnyye uskoriteli (Electron accelerators); trudy konferentsii. Moscow, Atomizdat, 1966, 240-248

TOPIC TAGS: pulse shaper, pulse shape, particle accelerator

ABSTRACT: A new impulse shaper (see figure) is described which produces quasi-triangular, quasi-trapezoidal, and stepped impulses and uses a capacitive switching in an LC oscillatory circuit. Main capacitor bank C_1 and small auxiliary banks C_2, C_2' have initial polarities as indicated in the figure. When thyratrons 1, 1′ are fired,

Card 1/2

APPROVED FOR RELEASE: 03/20/2001 CIA-RDP86-00513R000619310017-3"

"APPROVED FOR RELEASE: 03/20/2001 CIA-RDP86-00513R000619310017-3

ACC NR: AT7004002

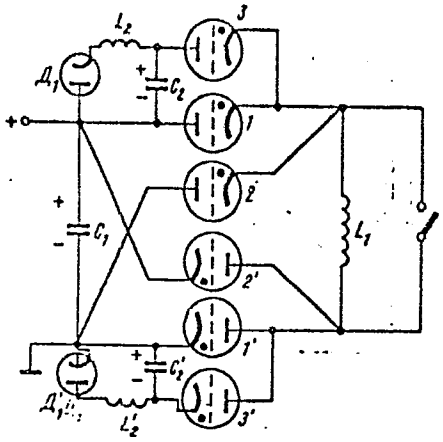

an oscillatory process arises in circuit L_1C_1. Quasi-triangular impulses are shaped when 1, 1' are turned off at a current phase $\omega t < 90°$. This switching is effected by firing 3, 3' which introduces capacitors C_2, C_2' into the power circuit. The new circuit preempts the current in 1, 1' which become nonconductive. Later, C_2, C_2' acquire the reverse polarity, and the current is transferred to 2, 2'; the oscillatory process ends when the current drops to zero. Meanwhile, the load current flows in one direction and has a near-triangular shape. A modification of the above circuit produces quasi-trapezoidal or stepped impulse shapes. Application of the above circuit to particle accelerators promises higher (up to 3 times) repetition rates and efficiency of accelerator operation. An experimental verification is claimed. Orig. art. has: 4 figures and 7 formulas.

SUB CODE: 09 / SUBM DATE: 06Mar66 / ORIG REF: 003 / OTH REF: 001

Card 2/2

APPROVED FOR RELEASE: 03/20/2001 CIA-RDP86-00513R000619310017-3"

"APPROVED FOR RELEASE: 03/20/2001 CIA-RDP86-00513R000619310017-3

ACC NR: AP6034233 (N) SOURCE CODE: UR/0120/66/000/005/0151/0155

AUTHOR: Ivashin, V. V.; Sipaylov, G. A.

ORG: NII of Nuclear Physics, Electronics and Automation, attached to the Tomsk Polytechnic Institute (NII yadernoy fiziki, elektroniki i avtomatiki pri Tomskom politechnicheskom institut)

TITLE: Generator of unipolar current pulses of triangular and trapezoidal waveforms

SOURCE: Pribory i tekhnika eksperimenta, no. 5, 1966, 151-155

TOPIC TAGS: pulse generator, pulse shape, pulse shaper

ABSTRACT: Figure 1 shows a circuit for the generation and quasi-triangular and quasi-trapezoidal current pulses developed by the authors. Let us assume that a triangular magnetic pulse field is to be generated by the inductor L_1. The primary energy source is the capacitor C_1 which is charged from a power supply. Thyratrons 1, 1', 2, 2' carry the main average current; there are also two auxiliary thyratrons 3 and 3', associated with small capacitors C_2 and C'_2. Thyratrons 1 and 1' are called the direct branch switches, thyratrons 2 and 2' are inverted branch switches. When 1 and 1' are fired, the current and voltage are described by simple equations of a resonant process

$$i_1 = U_0 \omega C_1 \sin \omega t,$$

$$u_{C_1} = -U_0 \cos \omega t,$$

UDC: 621.374

Card 1/3

APPROVED FOR RELEASE: 03/20/2001 CIA-RDP86-00513R000619310017-3"

"APPROVED FOR RELEASE: 03/20/2001 CIA-RDP86-00513R000619310017-3

ACC NR: AP6034233

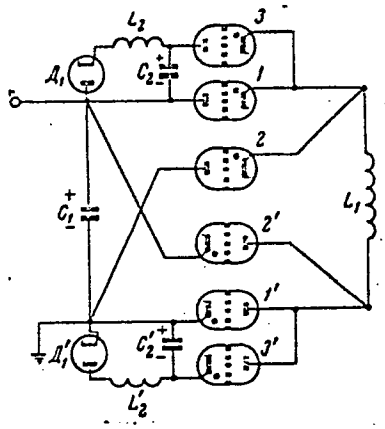

Fig. 1.

where $\omega = (L_1C_1)^{-1/2}$ is the natural resonant frequency of the circuit, and U_0 is the initial voltage on C_1. The principle of the method for shaping of quasi-triangular pulses consists in an artificial abrupt transfer of the circuit from the state, corresponding to the angle ωt_k, into the state, corresponding to the angle $\pi-\omega t_k$. This is accomplished by commutating the current from the direct into the inverted branch using the appropriate switches. A polarity change of voltage across the inductor and the reversal

Card 2/3

APPROVED FOR RELEASE: 03/20/2001 CIA-RDP86-00513R000619310017-3"

"APPROVED FOR RELEASE: 03/20/2001 CIA-RDP86-00513R000619310017-3

ACC NR: AP6034233

of the current flow in the capacitor C_1 occur at that time. This event is initiated at an instant corresponding to the angle ωt_k. The quasi-trapezoidal pulses are formed by non-simultaneous firing of the switches 3 and 3' at times t_{k_1} and t_{k_2}, respectively. For the generation of the quasi-triangular pulses, these switches are fired simultaneously at time t_k. Hence, the wave shapes are formed out of segments of the sinusoidal signals. The system performed as predicted during experimental evaluation. The authors thank A. V. Sinitsyn and A. G. Pereversev for their assistance in the experiments. Orig. art. has: 6 figures.

SUB CODE: 20, 14/ SUBM DATE: 23Sep65/ ORIG REF: 005/ OTH REF: 001

Card 3/3

APPROVED FOR RELEASE: 03/20/2001 CIA-RDP86-00513R000619310017-3"

"APPROVED FOR RELEASE: 03/20/2001 CIA-RDP86-00513R000619310017-3

IVASHINENKO, K.P., inzh.

Development of the Andizhan Oils and Fats Combine during the years of the Soviet regime. Masl.-zhir. prom. 23 no.12:7-8 '57.
(Andizhan--Oil industries) (MIRA 11:2)

APPROVED FOR RELEASE: 03/20/2001 CIA-RDP86-00513R000619310017-3"

"APPROVED FOR RELEASE: 03/20/2001 CIA-RDP86-00513R000619310017-3

ALYUSHINSKAYA, N.M.; ANISKINA, N.A.; IVASHINTSOVA, L.D.

Spring runoff of Northern Dvina basin rivers and predicting it. Trudy GGI no.97:3-137 '62. (MIRA 15:11)
(Northern Dvina Valley—Runoff)

APPROVED FOR RELEASE: 03/20/2001 CIA-RDP86-00513R000619310017-3"

"APPROVED FOR RELEASE: 03/20/2001 CIA-RDP86-00513R000619310017-3

IVASHKEVICH, A.A., inzh.

Model of a boiling crisis with forced motion of the liquid in channels. Teploenergetika 11 no.6:66-69 Je '64. (MIRA 18:7)

APPROVED FOR RELEASE: 03/20/2001 CIA-RDP86-00513R000619310017-3"

"APPROVED FOR RELEASE: 03/20/2001 CIA-RDP86-00513R000619310017-3

IVASHKEVICH, A.A., inzh.

Heat transfer coefficient in the transition region from convection to boiling during forced liquid motion in channels. Teploenergetika 10 no.10:76-78 O'63 (MIRA 17:7)

APPROVED FOR RELEASE: 03/20/2001 CIA-RDP86-00513R000619310017-3"

"APPROVED FOR RELEASE: 03/20/2001 CIA-RDP86-00513R000619310017-3

21.1000,24.5200

77217
SOV/89-8-1-11/29

AUTHOR: Ivashkevich, A. A.

TITLE: Critical Heat Flows During Forced Movement of Fluids Through Tubes. Letter to the Editor

PERIODICAL: Atomnaya energiya, 1960, Vol 8, Nr 1, pp 51-54 (USSR)

ABSTRACT: The author's purpose was to generalize experimental results from various investigations and to derive an equation for critical value of the heat flow q_{cr} at which the bubble boiling goes over into film boiling. Earlier, Kruzhilin (G. N. Kruzhilin, Izv. AN SSSR, Technical Series, Nr 7, 967, 1948, Nr 5, 701, 1949) developed a system of criteria which characterizes the boiling process of liquids in a large volume subjected to natural convection:

$$\frac{u^2\gamma''}{gd_0(\gamma'-\gamma'')} : \frac{wd_0}{\nu'} : \frac{\gamma'}{\gamma''} : \frac{i'-i_c}{r}, \qquad (1)$$

where w and u are velocities of the liquid and the vapor; g is acceleration of gravity; ν' and r' are the

Card 1/12

APPROVED FOR RELEASE: 03/20/2001 CIA-RDP86-00513R000619310017-3"

"APPROVED FOR RELEASE: 03/20/2001 CIA-RDP86-00513R000619310017-3

Critical Heat Flows During Forced Movement of Fluids Through Tubes. Letter to the Editor

77217
SOV/89-8-1-11/29

kinematic viscosity and heat of evaporation of the liquid; γ' and γ'' are specific weights of the liquid and the vapor; i' and i_c are the heat content at the center of flow. The quantity

$$d_0 = \sqrt{\frac{\sigma}{\gamma' - \gamma''}},$$

proportional to the breakaway diameter of the bubble, is taken as the determining criterion; σ is the surface tension of the liquid. The author added to the system in (1) those criteria needed to characterize the geometry of the tube. With $u = \frac{q_{cr}}{r\gamma''}$ he obtained

Card 2/12

APPROVED FOR RELEASE: 03/20/2001 CIA-RDP86-00513R000619310017-3"

"APPROVED FOR RELEASE: 03/20/2001 CIA-RDP86-00513R000619310017-3

Critical Heat Flows During Forced Movement of Fluids Through Tubes. Letter to the Editor

77217
SOV/89-8-1-11/29

$$\left.\begin{aligned} K_{cr} &= \frac{q_{cr}}{r^{*}\sqrt{g\gamma''}\sqrt[4]{\sigma(\gamma'-\gamma'')}}; \\ Re_1 &= \frac{w\sqrt{\sigma}}{\nu'\sqrt{\gamma'-\gamma''}}; \quad K_2 = \frac{l-l_c}{r}; \\ K_3 &= \frac{l_1\sqrt{\gamma'-\gamma''}}{\sqrt{\sigma}}; \quad K_4 = \frac{l_2}{d_h}; \\ K_5 &= \frac{d_h\sqrt{\gamma'-\gamma''}}{\sqrt{\sigma}}, \end{aligned}\right\} \quad (2)$$

where ℓ_1 is distance from the beginning of the heated section to the cross section under observation; ℓ_2 is distance from the section of the tube where $x = 0$ to the section under observation (if $x > 0$ at the beginning of the tube, one measures ℓ_2 from the beginning of the heated section); x is vapor content of the flow; d_h is the hydraulic diameter of the tube. Analyzing data from various sources the author derived an equation for q_{cr} for the case of forced convection

Card 3/12

APPROVED FOR RELEASE: 03/20/2001 CIA-RDP86-00513R000619310017-3"

"APPROVED FOR RELEASE: 03/20/2001 CIA-RDP86-00513R000619310017-3

of fluids through tubes.

$$K = 1{,}9 \cdot 10^{-5} Re\,(1 + 1{,}8 \cdot 10^{-6}\,[K_3\,(1 + K_2)^{-1} + K_1\,Re]^{-1}. \qquad (3)$$

where

$$Re = \frac{w\sqrt{\sigma}}{\nu'\sqrt{\gamma' - \gamma''}} \text{ FOR } \frac{d_h\sqrt{\gamma' - \gamma''}}{2\sqrt{\sigma}} > 1;$$

$$Re = \frac{w d_h}{2\nu'} \text{ FOR } \frac{d_h\sqrt{\gamma' - \gamma''}}{2\sqrt{\sigma}} \leq 1;$$

$$r^* = r\left(1 + A\,\frac{i' - i_c}{r}\right) \text{ FOR } t_\ell < t_d;$$

$$A = 1 + 0{,}065\left(\frac{\gamma'}{\gamma''}\right)^{0.8}; \quad r^* = r\,(1 - x) \text{ FOR } x > 0;$$

t_1 is temperature of the center of the liquid. Eq. (3) was confirmed using data from experiments with ethyl alcohol, deuterm A, liquid CO_2, nitrogen, and

APPROVED FOR RELEASE: 03/20/2001 CIA-RDP86-00513R000619310017-3"

"APPROVED FOR RELEASE: 03/20/2001 CIA-RDP86-00513R000619310017-3

hydrogen. The value of q_{cr} obtained from Eq. (3) refers to the section at which one evaluates the criteria. The physical parameters of the fluid and the vapor utilized in (3) are determined at t_s. Eq. (3) is sufficiently general to be valid for $t_\ell < t_s$ as well as for the case of $x > 0$. Since the velocity and the vapor content profile become stabilized at $K_3 = 50$ and $K_4 = 125$ (as shown by other investigators), one uses these values in Eq. (3) even when actal $K_3 > 50$ and $K_4 > 125$. In Figures 1 to 3 the author distinguishes between points obtained with $t_\ell < t_s$, and those with $x > 0$. Everywhere d is diameter of the tube; δ is width of the aperture; ℓ is heated length of the tube. As seen from the figures, the data agree with one another, while the original data in references [3] versus [11,12] and [4] versus [5,6] do not agree due to the fact that the comparison is made without

APPROVED FOR RELEASE: 03/20/2001 CIA-RDP86-00513R000619310017-3"

"APPROVED FOR RELEASE: 03/20/2001 CIA-RDP86-00513R000619310017-3

77217 SOV/89-8-1-11/29

Fig 1

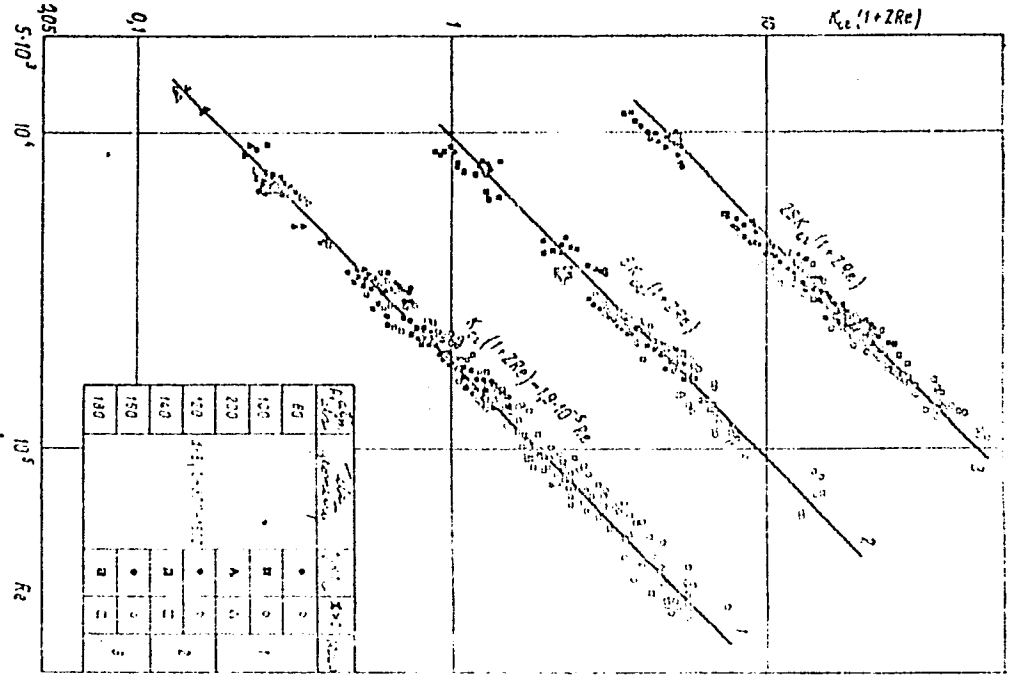

Card 6/12

APPROVED FOR RELEASE: 03/20/2001 CIA-RDP86-00513R000619310017-3"

"APPROVED FOR RELEASE: 03/20/2001 CIA-RDP86-00513R000619310017-3

77217 SOV/89-8-1-11/29

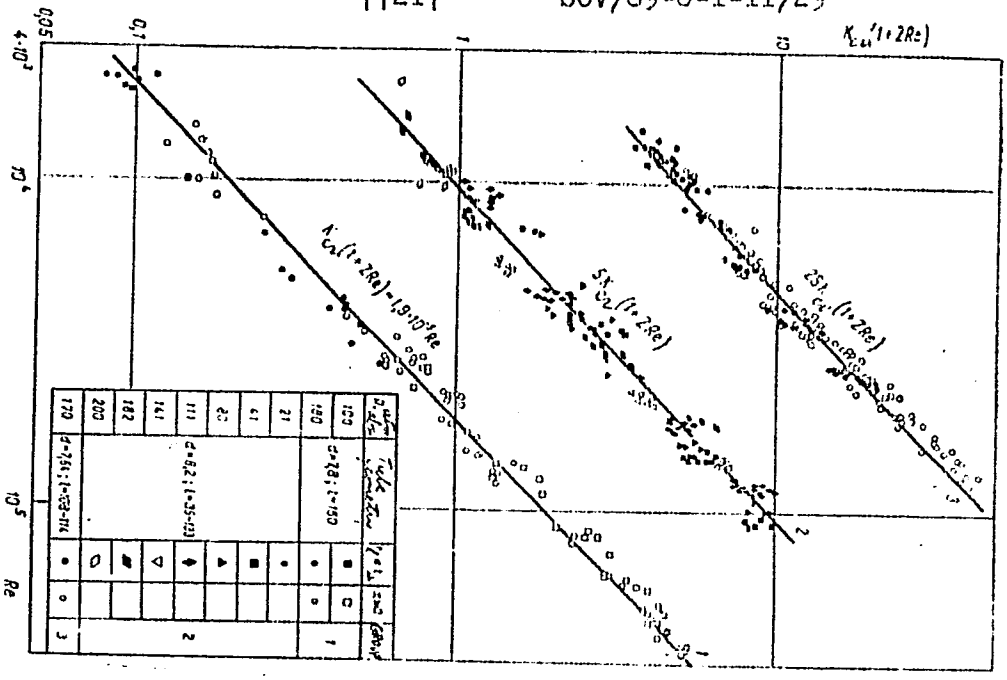

Fig. 2

Card 7/12

APPROVED FOR RELEASE: 03/20/2001 CIA-RDP86-00513R000619310017-3"

"APPROVED FOR RELEASE: 03/20/2001 CIA-RDP86-00513R000619310017-3

Critical Heat Flows During Forced Movement of Fluids Through Tubes. Letter to the Editor

77217
SOV/89-8-1-11/29

Caption to Fig. 1.

Fig. 1. Comparison of experimental data from reference /4/ with Eq. (3). (Ref. 4 of paper is: V. L. Subbotin, et al., Atomizdat, 1958, pp 95 and 120.)

Caption to Fig. 2.

Fig. 2. Comparison of experiperimental data with Eq. (3): groups of points 1, 2, and 3 taken from references /6/, /7/, and /5/, respectively. (These references are: (6) Z. L. Miropol'skiy, M. E. Shitzman, Atomizdat, 1958, p 24; (7) I. T. Alad'ev, L. D. Dodonov, V. S. Udalov, Atomic Energy, USSR, Vol 6, Nr 1, 74, 1959; (5) V. E. Doroshchuk, F. P. Frid, Atomizdat, 1958, p 71.)

Card 8/12

APPROVED FOR RELEASE: 03/20/2001 CIA-RDP86-00513R000619310017-3"

"APPROVED FOR RELEASE: 03/20/2001 CIA-RDP86-00513R000619310017-3

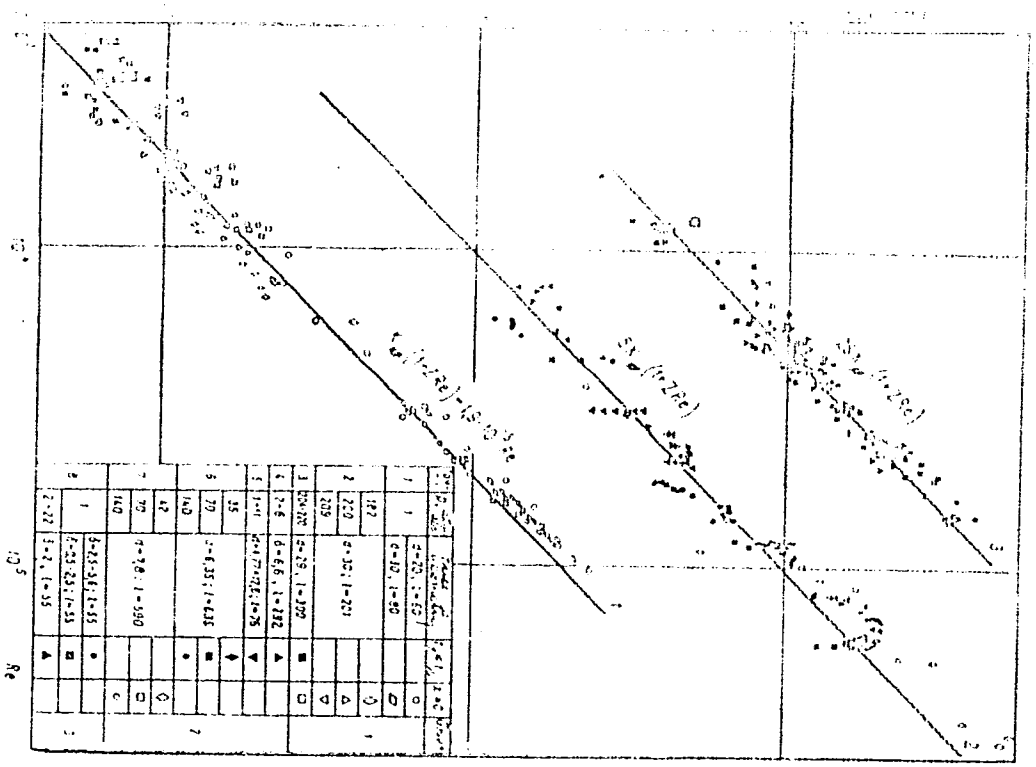

APPROVED FOR RELEASE: 03/20/2001 CIA-RDP86-00513R000619310017-3"

"APPROVED FOR RELEASE: 03/20/2001 CIA-RDP86-00513R000619310017-3

Critical Heat Flows During Forced Movement of Fluids Through Tubes. Letter to the Editor [illegible]

Caption to Fig. 3.

Fig. 3. Comparison of experimental data with Eq. (3): Points 1 to 8 taken from references [10], [8], [9], [11], [12], [13], [14], and [3], respectively. (These references are: (10) M. A. Styrikovich, "Steam generation of ultrahigh parameters, Gosenergoizdat, 1950; (8) M. A. Styrikovich, "Hydrodynamics and heat exchange during boiling in steam boilers of high pressure," Akademizdat, 1955; (9) M. A. Styrikovich, M. E. Shitzman, Z. L. Mirspol'skiy, "Thermal energetiks, Nr 12, 32, 1955; (11) this is Ref. 3 at end of Abstract; (12) this is Ref. 2 at end of Abstract; (13) this is Ref. 1 at end of Abstract; (14) S. MacLane, Lectures on the technique of reactor design, Sudpromgizat, 1953; (3) V. S. Chistin, V. P. Yukin, Journal Technical Physics (USSR), [illegible], Nr 7, p 1942, 1956.)

Card 10/12

APPROVED FOR RELEASE: 03/20/2001 CIA-RDP86-00513R000619310017-3"

"APPROVED FOR RELEASE: 03/20/2001 CIA-RDP86-00513R000619310017-3

taking into account the length of the tube. Scattering of points is mostly at random and does not exceed +25-30%. It is due to experimental inaccuracy and the following simplifications: the velocity of flow w was determined as the discharge divided by the area of the tube and the specific gravity taken at a temperature and vapor content averaged along the displacement; i_c is also taken to be an average over the displacement. Eq. (3) was also verified in 12 experiments with water having its center heated to the boiling temperature and with water vapor mixtures in circular, rectangular, and annular cross sections. Parameters were varied over a wide range: p = 1 to 220 abs atm; w = 0.3 to 24 m/sec; $t_s - t_1$ = 0 to 160° C; x = 0 to 0.7; d_h = 1 to 30 mm; l = 35 to 1,800 mm, corresponding to $R = 2 \cdot 10^3$ to $4 \cdot 10^5$; K_2 = 0 to 0.8, K_3 = 20 to 2,000, K_4 = 1 to 220, and K_5 = = 0.4 to 48. There are 3 figures; and 14 references, 11 Soviet, 3 U.S. The 3 U.S. references are:

APPROVED FOR RELEASE: 03/20/2001 CIA-RDP86-00513R000619310017-3"

"APPROVED FOR RELEASE: 03/20/2001 CIA-RDP86-00513R000619310017-3

Critical Heat Flows During Forced Movement of Fluids Through Tubes. Letter to the Editor

77217
SOV/89-8-1-11/29

(1) H. Buchberg, F. Romie, R. Lipcis, M. Greenfield, Heat Transfer and Fluid Mechanics Institute, Stanford, California, June, 1951; (2) F. Gunther, Trans. ASME, 73, Nr 2, 115 (1951); (3) W. McAdams, W. Kennel, C. Minden, R. Carl, P. Picornell, J. Dew, Industr. and Engng. Chem. 41, Nr 9, 1945 (1949).

SUBMITTED: October 13, 1958

Card 12/12

APPROVED FOR RELEASE: 03/20/2001 CIA-RDP86-00513R000619310017-3"

"APPROVED FOR RELEASE: 03/20/2001 CIA-RDP86-00513R000619310017-3

ACCESSION NR: AP4037642 S/0096/64/000/006/0066/0069

AUTHOR: Ivashkevich, A. A. (Engineer)

TITLE: Model of a boiling crisis during the forced motion of a liquid in a channel

SOURCE: Teploenergetika, no. 6, 1964, 66-69

TOPIC TAGS: boiling crisis, heat flux, steam content, mass exchange, evaporation, boundary layer, flow parameter, liquid property, steam property, liquid flow rate, fluid flow, fluid mechanics, flow analysis

ABSTRACT: The author determined that an increase in heat flux, q, leads to an increase in wall temperature, which, in turn, resulted in an increase in the number of steam-formation centers per unit of surface, z, and an increase in the volumetric steam content at the walls, β_c. A further increase in q resulted in an increase of β_c such that it reached the threshold value, β_{crisis}, at which a disruption of mass-exchange occurred. An insufficient influx of liquid, from the nucleus of the flow to the walls, led to the evaporation of the entire liquid in the boundary layer and the formation of a continuous layer of steam. Thus, a crisis developed when

$$\beta_c = \beta_{crisis} \quad (1)$$

Card 1/2

APPROVED FOR RELEASE: 03/20/2001 CIA-RDP86-00513R000619310017-3"

"APPROVED FOR RELEASE: 03/20/2001 CIA-RDP86-00513R000619310017-3

ACCESSION NR: AP4037642

The concluding mathematical argument presented a general picture of the effect of the boiling crisis; further effort is required, particularly in the analytical expressions of the dependences β_1, β_2, and β_{crisis} on the flow parameters and the properties of the liquid and steam. The model did, however, answer questions concerning the dependence of critical heat flux on liquid flow rate, temperature of the liquid, steam content of the flow, the heated length of the channel, the diameter of the channel, and the distribution of heat evolution along the length of the channel. Orig. art. has: 10 equations.

ASSOCIATION: none

SUBMITTED: 00 DATE ACQ: 22Jun64 ENCL: 00

SUB CODE: ME NO REF SOV: 017 OTHER: 002

Card 2/2

APPROVED FOR RELEASE: 03/20/2001 CIA-RDP86-00513R000619310017-3"

"APPROVED FOR RELEASE: 03/20/2001 CIA-RDP86-00513R000619310017-3

MALYUTIN, M.M.; SHKARUPA, V.A.; IVASHKEVICH, E.B.; BASHLYKOVA, O.M.; NORINA, A.Ye.

Operations of yeast production without filtration. Gidroliz.i lesokhim. prom. 9 no.3:16-17 '56. (MLRA 9:8)

1. Tavdinskiy gidroliznyy zavod.
(Yeast)

APPROVED FOR RELEASE: 03/20/2001 CIA-RDP86-00513R000619310017-3"

"APPROVED FOR RELEASE: 03/20/2001 CIA-RDP86-00513R000619310017-3

ACCESSION NR: AR4020696 S/0275/64/000/001/B024/B024

SOURCE: RZh. Elektronika i yeye primeneniye, Abs. 1B156

AUTHORS: Valitov, R. A.; Domanova, Ye. A.; Ivashkevich, E. D.

TITLE: Use of Hall effect in semiconductors to stabilize microwave power level

CITED SOURCE: Uch. zap. Khar'kovsk. un-t, v. 132, 1962, Tr. Radiofiz. fak., v. 7, 141-145

TOPIC TAGS: semiconductor, Hall effect, microwave power stabilization, germanium plate stabilizer, electrically controlled power stabilizer

TRANSLATION: The feasibility is demonstrated of producing an electrically controlled waveguide microwave power stabilizer using the Hall effect in semiconductors. The operating principle of the stabilizer is based on changing the carrier density in the semiconductor by means of the Hall effect. At low losses this change is directly proportional to the magnetic and electric fields. Variation

Card 1/2

APPROVED FOR RELEASE: 03/20/2001 CIA-RDP86-00513R000619310017-3"

"APPROVED FOR RELEASE: 03/20/2001 CIA-RDP86-00513R000619310017-3

ACCESSION NR: AR4020696

of the electric conductivity is accompanied by a change in the transparency of a semiconductor plate relative to the electromagnetic field. The shortcomings of other stabilization methods are briefly discussed. The article includes a block diagram of a semiconductor stabilizer, the parameters of the employed germanium plate, plots of the attenuation (in decibels) against the amplitude of the pulsed voltage applied to the plate, the dependence of the plate SWR on the plate dc current, and the stabilization characteristic of the assembly. The range of stabilization reaches 6 dB at a stabilization coefficient of 96 and an accuracy ±0.25 dB. The possibility of improving the stabilizer characteristics by using a germanium plate with optimal parameters and improving the feedback circuit is discussed. The inertia of the described apparatus, estimated from the time necessary for the attenuation to become steady (to vanish), amounts to ~50 microseconds. Bibliography, 6 titles. L. Sh.

DATE ACQ: 03Mar64 SUB CODE: GE, SD ENCL: 00

Card 2/2

APPROVED FOR RELEASE: 03/20/2001 CIA-RDP86-00513R000619310017-3"

"APPROVED FOR RELEASE: 03/20/2001 CIA-RDP86-00513R000619310017-3

ACCESSION NR: AR4014770 S/0058/63/000/012/H019/H020

SOURCE: RZh. Fizika, Abs. 12Zh134

AUTHOR: Valitov, R. A.; Domanova, Ye. A.; Ivashkevich, E. D.

TITLE: Use of the Hall effect in semiconductors for automatic stabilization of the microwave power level

CITED SOURCE: Uch. zap. Khar'kovsk. un-t, v. 132, 1962. Tr. Radiofiz. fak., v. 7, 141-145

TOPIC TAGS: Hall effect, semiconductor, microwave power control, microwave power stabilization, Hall effect attenuator

TRANSLATION: A scheme is described for the stabilization of the level of microwave power in a waveguide channel in which the regulating element is an attenuator which makes use of the Hall effect in semiconductors (abstract 12 Zh135). A block diagram of the sta-

Card 1/2

APPROVED FOR RELEASE: 03/20/2001 CIA-RDP86-00513R000619310017-3"

"APPROVED FOR RELEASE: 03/20/2001 CIA-RDP86-00513R000619310017-3

ACCESSION NR: AR4014770

bilizer is given and its construction and characteristics are described. The stabilization range is ~6 dB. In this range, the stabilization coefficient is 96 and the stabilization accuracy is 0.25 dB. The possibility of considerably improving the characteristics of this stabilizer, and the advantages of the described stabilization method over existing ones, are pointed out. K. Yermilin.

DATE ACQ: 24Jan64 SUB CODE: PH, GE ENCL: 00

Card 2/2

APPROVED FOR RELEASE: 03/20/2001 CIA-RDP86-00513R000619310017-3"

"APPROVED FOR RELEASE: 03/20/2001 CIA-RDP86-00513R000619310017-3

IVASHKEVICH, E.I.; SERGIYEVSKIY, V.S.

Blood protein picture in experimental disorders of the coronary venous and arterial blood circulation. Ter. arkh. 35 no.4: 31-35 Ap'63 (MIRA 17:1)

1. Iz klinicheskoy laboratorii (zav. - kand. med. nauk I.I. Yevnina) i eksperimental'no-animal'noy laboratorii (zav. - kand. med. nauk V.S. Sergiyevskiy) Instituta eksperimental'noy biologii i meditsiny (dir. - prof. Ye.N.Meshalkin) Sibirskogo otdeleniya AN SSSR.

APPROVED FOR RELEASE: 03/20/2001 CIA-RDP86-00513R000619310017-3"

"APPROVED FOR RELEASE: 03/20/2001 CIA-RDP86-00513R000619310017-3

SERGIYEVSKIY, V.S.; IVASHKEVICH, E.I. (Novosibirsk)

Changes in the mineral content of blood plasma in experimental ventricular fibrillation developing as a result of acute myocardial ischemia. Pat. fiziol. i eksp. terap. 7 no.3: 37-41 My-Je'63 (MIRA 17:4)

1. Iz eksperimental'no-animal'noy laboratorii (zav. - kand. med. nauk V.S. Sergiyevskiy) i klinicheskoy laboratorii (zav. N.N. Komissarova) Instituta eksperimental'noy biologii i meditsiny (dir. - prof. Ye.N. Meshalkin) Sibirskogo otdeleniya AN SSSR.

APPROVED FOR RELEASE: 03/20/2001 CIA-RDP86-00513R000619310017-3"

"APPROVED FOR RELEASE: 03/20/2001 CIA-RDP86-00513R000619310017-3

SERGIYEVSKIY, V.S.; TSOY, L.A.; SERDYUK, N.G.; IVASHKEVICH, E.I.; CHEVAGIN, V.N.

Experimental surgery on the coronary arteries of the heart. Trudy Inst. klin. i eksp. khir. AN Kazakh. SSR 9:72-81 '63. (MIRA 17:12)

APPROVED FOR RELEASE: 03/20/2001 CIA-RDP86-00513R000619310017-3"

"APPROVED FOR RELEASE: 03/20/2001 CIA-RDP86-00513R000619310017-3

SERGIYEVSKIY, V.S., kand. med. nauk; IVASHKEVICH, E.I.; TSOY, L.A.; SERDYUK, N.G.

Some biochemical changes in experimental disorders of arterial and venous coronary blood circulation and in surgical correction of coronary insufficiency. Kaz. med. zhur. no.6:4-8 N-D '63. (MIRA 17:10)

1. Animal'naya laboratoriya (zav. - kand. med. nauk V.S. Sergiyevskiy) Instituta eksperimental'noy biologii i meditsiny Sibirskogo otdeleniya AN SSSR.

APPROVED FOR RELEASE: 03/20/2001 CIA-RDP86-00513R000619310017-3"

"APPROVED FOR RELEASE: 03/20/2001 CIA-RDP86-00513R000619310017-3

POPOVA, N.K.; IVASHKEVICH, Z.I.

Hydrazine derivatives and electrolyte dynamics in experimental acute coronary deficiency. Izv. SO AN SSSR no.4 Ser. biol.-med.nauk no.1:120-124 '65. (MIRA 18:8)

1. Otdel eksperimental'noy biologii i patologii Instituta tsitologii i genetiki Sibirskogo otdeleniya AN SSSR, i Institut eksperimental'noy biologii i meditsiny Ministerstva zdravookhraneniya RSFSR, Novosibirsk.

APPROVED FOR RELEASE: 03/20/2001 CIA-RDP86-00513R000619310017-3"

"APPROVED FOR RELEASE: 03/20/2001 CIA-RDP86-00513R000619310017-3

TSOY, L.A.; SERGIYEVSKIY, V.S.; SERDYUK, N.G.; IVASHKEVICH, E.I. (Novosibirsk)

Excision of the coronary vessels in an experiment. Grud. khir. 6 no.4:117 Jl-Ag '64. (MIRA 18:4)

APPROVED FOR RELEASE: 03/20/2001 CIA-RDP86-00513R000619310017-3"

"APPROVED FOR RELEASE: 03/20/2001 CIA-RDP86-00513R000619310017-3

POPOVA, N.K.; IVASHKEVICH, E.I.; SERGIYEVSKIY, V.S.

Effect of iprazid on the dynamics of electrolytes in experimental acute coronary insufficiency. Pat. fiziol. i eksp. terap. 9 no.3:51-55 My-Je '65. (MIRA 18:9)

1. Laboratoriya farmakologii (zav.- kand. med. nauk R.Yu. Il'yuchenok) otdela eksperimental'noy biologii Instituta tsitologii i genetiki Sibirskogo otdeleniya AN SSSR i Institut eksperimental'noy biologii i meditsiny Ministerstva zdravookhraneniya RSFSR, Novosibirsk.

APPROVED FOR RELEASE: 03/20/2001 CIA-RDP86-00513R000619310017-3"

"APPROVED FOR RELEASE: 03/20/2001 CIA-RDP86-00513R000619310017-3

POPOVA, N.K.; IVASHKEVICH, E.I.

Pharmacological prevention of fibrillation in acute ischemic lesion of the heart and the dynamic of electrolytes. Biul. eksp.biol. i med. 59 no.5:64-67 '65. (MIRA 18:11)

1. Laboratoriya farmakologii (zav. kand. med. nauk E.Yu. Il'yuchenok) otdela eksperimental'noy biologii Instituta tsitologii i genetiki Sibirskogo otdeleniya AN SSSR i klinicheskaya laboratoriya (zav. - kand. med. nauk N.I. Yevnina) Instituta eksperimental'noy biologii i meditsiny Ministerstva zdravookhraneniya RSFSR, Novosibirsk. Submitted January 18, 1964.

APPROVED FOR RELEASE: 03/20/2001 CIA-RDP86-00513R000619310017-3"

"APPROVED FOR RELEASE: 03/20/2001 CIA-RDP86-00513R000619310017-3

VOLOKHOV, G.M.; IVASHKEVICH, E.V.; SURKOV, G.A.

Nonstationary method for determining thermal characteristics of nonmetallic materials. Inzh.-fiz. zhur. 7 no.12:39-44 D '64 (MIRA 18:2)

1. Institut teplo- i massoobmena AN BSSR, Minsk.

APPROVED FOR RELEASE: 03/20/2001 CIA-RDP86-00513R000619310017-3"

"APPROVED FOR RELEASE: 03/20/2001 CIA-RDP86-00513R000619310017-3

IVASHKEVICH, G. A.

IVASHKEVICH, G. A.: "The diagnostic significance of the pulse of the abdominal aorta in the surgical clinic." L'vov State Medical Inst. Chair of General Surgery, Surgical Department, Yavorovskaya Regional Hospital. L'vov, 1955. (Dissertation for the Degree of Candidate in Medical Sciences)

Source: Knizhnaya letopis' No.28 1956 Moscow

APPROVED FOR RELEASE: 03/20/2001 CIA-RDP86-00513R000619310017-3"

"APPROVED FOR RELEASE: 03/20/2001 CIA-RDP86-00513R000619310017-3

KOVTUNOVICH, G.P.; IVASHKEVICH, G.A. (L'vov)

Diagnostic significance of the abdominal aortic pulse. Klin.med. 34 no.10:40-43 O '56. (MLRA 10:1)

1. Iz kafedry obshchey khirurgii (zav. - prof. G.P.Kovtunovich) L'vovskogo meditsinskogo instituta (dir. - professor L.N.Kuzmenko) i khirurgicheskogo otdeleniya (zav. G.A.Ivashkevich) Yavorovskoy rayonnoy bol'nitsy.

(PULSE
aortic abdom., diag. significance in dis. of lymphatic syst.)
(LUMPHATIC SYSTEM, dis.
diag., determ. of aortic abdom pulse)

APPROVED FOR RELEASE: 03/20/2001 CIA-RDP86-00513R000619310017-3"

"APPROVED FOR RELEASE: 03/20/2001 CIA-RDP86-00513R000619310017-3

IVASHKEVICH, G.A. (L'vov, ul. Nekrasova, d.15, kv.1)

Massive hemorrhage of the gallbladder. Vest.khir. 80 no.4:126-127 Ap'58 (MIRA 11:5)

1. Iz khirurgicheskogo otdeleniya (zav. - G.A. Ivashkevich) Yavorovskoy rayonnoy bol'nitsy (gl.vrach - F.G. Suziy).
(GALLBLADDER, hemorrh.
massive hemorrh., case report (Rus))

APPROVED FOR RELEASE: 03/20/2001 CIA-RDP86-00513R000619310017-3"

"APPROVED FOR RELEASE: 03/20/2001 CIA-RDP86-00513R000619310017-3

IVASHKEVICH, G.A., kand. med. nauk (L'vov, ul. Nekrasova, d. 15, kv. 1)

Coelomic pericardial cysts. Vest. khir. 82 no.5:115-116 My '59. (MIRA 12:7)

1. Iz kliniki obshchey khirurgii (zav. - prof. G. P. Kovtunovich) i kliniki tuberkuleza (zav. - prof. I. T. Stukalo) L'vovskogo meditsinskogo instituta.
(PERICARDIUM--DISEASES) (CYSTS)

APPROVED FOR RELEASE: 03/20/2001 CIA-RDP86-00513R000619310017-3"

"APPROVED FOR RELEASE: 03/20/2001 CIA-RDP86-00513R000619310017-3

IVASHKEVICH, G.A., dotsent (L'vov, ul.Nekrasova, d.15,kv.1)

Possibility of evacuating tetanus patients. Klin.khir. no.8:12-13 Jl '62. (MIRA 15:11)

1. Kafedra obshchey khirurgii (zav. - prof. A.I.Gnatyshak) i kafedra infektsionnykh bolezney (zav. - dotsent B.N.Kotlyarenko) L'vovskogo meditsinskogo instituta.
(LVOV PROVINCE--TETANUS)

APPROVED FOR RELEASE: 03/20/2001 CIA-RDP86-00513R000619310017-3"

"APPROVED FOR RELEASE: 03/20/2001 CIA-RDP86-00513R000619310017-3

IVASHKEVICH, G.A. (L'vov, ul. Nekrasova, d. 15, kv. 1)

Bronchial adenoma. Grudn. khir. 4. no.5:109-111 S-O'62 (MIRA 17:3)

1. Iz kliniki obshchey khirurgii (zav. - prof. G.P. Kovtunovich) L'vovskogo meditsinskogo instituta (dir. - prof. L.N. Kuzmenko).

APPROVED FOR RELEASE: 03/20/2001 CIA-RDP86-00513R000619310017-3"

"APPROVED FOR RELEASE: 03/20/2001 CIA-RDP86-00513R000619310017-3

IVASHKEVICH, G.A., dotsent

Use of sodium lactate in the compound treatment of tetanus. (MIRA 15:11)
Vrach.delo no.8:111-114 Ag '62.

1. Kafedra infektsionnykh bolezney (zav. - dotsent B.N.Kotlyarenko) L'vovskogo meditsinskogo instituta.
(SODIUM LACTATE) (TETANUS)

APPROVED FOR RELEASE: 03/20/2001 CIA-RDP86-00513R000619310017-3"

"APPROVED FOR RELEASE: 03/20/2001 CIA-RDP86-00513R000619310017-3

IVASHKEVICH, G.A.; KOTLYARENKO, B.N.

Use of phenothiazine preparations as a basis for modern treatment of tetanus. Sov. Med. 26 no.9:120-122 S '62. (MIRA 17:4)

1. Iz kliniki infektsionnykh bolezney (zav. - dotsent B.N. Kotlyarenko) i kafedry obshchey khirurgii (zav. - prof. A. I. Gnatyshak) L'vovskogo meditsinskogo instituta.

APPROVED FOR RELEASE: 03/20/2001 CIA-RDP86-00513R000619310017-3"

"APPROVED FOR RELEASE: 03/20/2001 CIA-RDP86-00513R000619310017-3

CHERNAYA, L.A., prof.;IVASHKEVICH, G.A., dotsent

Tetanus in the newborn. Sov.med. 26 no.11:71-75 N'62
(MIRA 17:3)

1. Iz L'vovskogo instituta perelivaniya krovi (dir. - dotsent D.G. Petrov) i L'vovskogo meditsinskogo instituta (dir. - prof. L.N.Kuz'menko).

APPROVED FOR RELEASE: 03/20/2001 CIA-RDP86-00513R000619310017-3"

"APPROVED FOR RELEASE: 03/20/2001 CIA-RDP86-00513R000619310017-3

IVASHKEVICH, G.A. (L'vov); CHERNAYA, L.A. (L'vov); KOTLYARENKO, B.N. (L'vov); KONONENKO, T.S. (L'vov)

Intracarotid administration of antitetanus serum in the treatment of tetanus. Klin.med. 40 no.10:73-77 O '62. (MIRA 15:12)

1. Iz kliniki infektsionnykh bolezney (zav. - dotsent B.N. Kotlyarenko) L'vovskogo meditsinskogo instituta i laboratorii ranevykh infektsiy (zav. - prof. L.A.Chernaya).
(TETANUS) (TETANUS ANTITOXIN)

APPROVED FOR RELEASE: 03/20/2001 CIA-RDP86-00513R000619310017-3"

"APPROVED FOR RELEASE: 03/20/2001 CIA-RDP86-00513R000619310017-3

IVASHKEVICH, G.A., dotsent

Causes of death in tetanus. Vrach. delo no.7:101-104 Jl'63. (MIRA 16:10)

1. Klinika obshchey khirurgii (zav. - prof. A.I. Gnatyshak) i klinika infektsionnykh bolezney (zav. - dotsent B.N. Kotlyarenko) L'vovskogo meditsinskogo instituta.
(TETANUS—MORTALITY)

APPROVED FOR RELEASE: 03/20/2001 CIA-RDP86-00513R000619310017-3"

"APPROVED FOR RELEASE: 03/20/2001 CIA-RDP86-00513R000619310017-3

IVASHKEVICH, I., inzh.

All-purpose machine for cleaning sidewalks. Zhil.-kom.khoz. 10 no.3:33-34 '60. (MIRA 13:7)
(Street cleaning machinery)

APPROVED FOR RELEASE: 03/20/2001 CIA-RDP86-00513R000619310017-3"

"APPROVED FOR RELEASE: 03/20/2001 CIA-RDP86-00513R000619310017-3

IVASHKEVICH, I.A.

Increasing the effectiveness and stability of the operation of snow melters. Sbor.nauch.rab. AKKH no.3:67-79 '60. (MIRA 15:4)
(Snow removal)

APPROVED FOR RELEASE: 03/20/2001 CIA-RDP86-00513R000619310017-3"

"APPROVED FOR RELEASE: 03/20/2001 CIA-RDP86-00513R000619310017-3

VENIAMINOVA, Zinaida Nikolayevna; IVASHKEVICH, Irina Dmitriyevna; MIKHALEVSKAYA, V.I., red.; MURASHOVA, V.A., tekhn. red.

[Examples of the construction of transition lines in technical drawings] Primery postroeniia linii perekhoda v tekhnicheskikh formakh. Moskva, Gos.izd-vo "Vysshaia shkola," 1963. 38 p. (MIRA 16:5)

(Mechanical drawing)

APPROVED FOR RELEASE: 03/20/2001 CIA-RDP86-00513R000619310017-3"

"APPROVED FOR RELEASE: 03/20/2001 CIA-RDP86-00513R000619310017-3

IVASHKEVICH, K.A., mladshiy nauchnyy sotrudnik

Reorganization of tree planting. Put' i put. khoz. 9 no.10; 42-43 '65. (MIRA 18:10)

APPROVED FOR RELEASE: 03/20/2001 CIA-RDP86-00513R000619310017-3"

"APPROVED FOR RELEASE: 03/20/2001 CIA-RDP86-00513R000619310017-3

IVASHKEVICH, K.A.

Measures to improve snow-protection plantation in arid steppes and semideserts. Trudy TSNII MPS no.204:19-29 '60. (MIRA 14:4)

(Railroads--Snow protection and removal)
(Windbreaks, shelterbelts, etc.)

APPROVED FOR RELEASE: 03/20/2001 CIA-RDP86-00513R000619310017-3"

"APPROVED FOR RELEASE: 03/20/2001 CIA-RDP86-00513R000619310017-3

IVASHKEVICH, K.A.

Growth and development of snow-protection plantations on light Chestnut soils along the Volga Railroad. Trudy TSNII MPS no.204: 30-41 '60. (MIRA 14:4)

(Railroads--Snow protection and removal)
(Windbreaks, shelterbelts, etc.)

APPROVED FOR RELEASE: 03/20/2001 CIA-RDP86-00513R000619310017-3"

"APPROVED FOR RELEASE: 03/20/2001 CIA-RDP86-00513R000619310017-3

IVASHINENKO, K.P., inzh.; KABANOV, N.V., inzh.

New equipment and technological methods guarantee the successful completion of the plan. Masl.-zhir. prom. 27 no.8:35-36 Ag '61. (MIRA 14:8)

1. Andizhanskiy maslozhirovoy kombinat.
(Andizhan—Oil industries)

APPROVED FOR RELEASE: 03/20/2001 CIA-RDP86-00513R000619310017-3"

"APPROVED FOR RELEASE: 03/20/2001 CIA-RDP86-00513R000619310017-3

1ST AND 2ND ORDERS

PROCESSES AND PROPERTIES INDEX

IVASHKEVICH, M. A.

Ca

11C

Gluconic acid production by fluorescent bacteria. V. V. Pervozvanskii and M. A. Ivashkevich. *Microbiology* (U. S. S. R.) 8, 663-71 (in English, 671-2) (1939); cf. *C. A.* 34, 7321[1].—The gluconic acid-forming capacities of *B. fluorescens* No. 18 (I), *B. pulidum* No. 31 (II), *B. syncyanum* No. 44 (III) and 46 (IV), and *B. cyanofluorescens* No. 47 (V) were tested. They were cultured on a synthetic medium contg. 5% glucose, under 12-hr. aeration daily. The inoculum amounted to 10% of the total vol. of the medium. Most active were II and V, consuming most of the glucose in 5-7 days. IV was intermediate and I was the least active. When the time of cultivation was increased, under continuous aeration, and the amt. of inoculum raised to 20%, 79-89% Ca gluconate (VI) was produced by I and V, and 82-92% of the glucose utilized in 6-8 days. During the first 3 days the bacteria multiply, producing little VI. Then a max. of VI accumulates and the oxidation rate slows down. These bacteria can successfully compete with AcOH bacteria and with molds in VI production. T. Leanes

ASM-SLA METALLURGICAL LITERATURE CLASSIFICATION

APPROVED FOR RELEASE: 03/20/2001 CIA-RDP86-00513R000619310017-3"

"APPROVED FOR RELEASE: 03/20/2001 CIA-RDP86-00513R000619310017-3

IVASHKEVICH, N. P.

IVASHKEVICH, N. P. -- "The Use of Motion Pictures among the Techniques of Polytechnic Training." Leningrad State Pedagogical Inst imeni A. I. Gertsen. Chair of Methodology in Physics Lectures. Leningrad, 1956. (Dissertation for the Degree of Candidate in Pedagogical Sciences).

So.: Knizhnaya Letopis', No. 6, 1956.

APPROVED FOR RELEASE: 03/20/2001 CIA-RDP86-00513R000619310017-3"

"APPROVED FOR RELEASE: 03/20/2001 CIA-RDP86-00513R000619310017-3

IVASHKEVICH, N.P. (Leningrad)

Motion-picture technology in schools. Fiz. v shkole 16 no.3:67-69 My-Je '56. (MLRA 9:7)

1.Pedagogicheskiy institut imeni A.I.Gertsena.
(Motion-picture projection--Study and teaching)

APPROVED FOR RELEASE: 03/20/2001 CIA-RDP86-00513R000619310017-3"

"APPROVED FOR RELEASE: 03/20/2001 CIA-RDP86-00513R000619310017-3

IVASHKEVICH, P.A.; MIKHAYLOV, B.Ya.; ROZHKOV, G.I.; TAMARIN, A.L.

Determination of spore concentration in STI anthrax vaccine with the aid of an optic bacterial standard. Zhur.mikrobiol.epid. i imun. 30 no.1:36-37 Ja '58. (MIRA 12:3)

(ANTHRAX, immunol.
vaccine, determ. of spores with optic bact. standard (Rus))

APPROVED FOR RELEASE: 03/20/2001 CIA-RDP86-00513R000619310017-3"

"APPROVED FOR RELEASE: 03/20/2001 CIA-RDP86-00513R000619310017-3

IVASHKEVICH, P.A.

Camera for observing the development of bacteria. Lab.delo 5 no.5: 49-52 S-O '59. (MIRA 12:12)
(PHOTOGRAPHY, BIOLOGICAL) (BACTERIA)

APPROVED FOR RELEASE: 03/20/2001 CIA-RDP86-00513R000619310017-3"

"APPROVED FOR RELEASE: 03/20/2001 CIA-RDP86-00513R000619310017-3

SOV/16-59-6-15/46

17(2,12)

AUTHORS: Ivashkevich, P.A., Belokhvostov, S.D. and Voronin, Yu.S.

TITLE: Electron Microscopic Study of the Morphological Changes in STI Anthrax Vaccine Spores Under the Influence of Certain Disinfectants

PERIODICAL: Zhurnal mikrobiologii, epidemiologii i immunobiologii, 1959, Nr 6, pp 74-78 (USSR)

ABSTRACT: Using a Soviet EM-3, 1949 model, electron microscope with a magnification factor of 5,000 X and an accelerating voltage of 40 kv, the authors studied the morphological changes which occur in the spores of live STI anthrax vaccine under the action of aqueous solutions of formaldehyde, monochloramine, diocide and a mixture of 17% formaldehyde in water and 10% monochloramine (Disinfectant mixture Nr 2). Formaldehyde was found to produce no visible changes in the spores. The chlorous preparations, however, caused swelling and a decrease in the electron-optical density of the spore membranes. This, according to A.Ye. Kriss and V.I. Biryuzova, is evidence of a profound biochemical reconstruction in the spores connected with disintegration of the high-molecular compounds and their transformation into low-molecular ones. D.V. Nayzi and V.I. Vashkov have pointed out that the greater resistance of spores, compared to the

Card 1/2

APPROVED FOR RELEASE: 03/20/2001 CIA-RDP86-00513R000619310017-3"

"APPROVED FOR RELEASE: 03/20/2001 CIA-RDP86-00513R000619310017-3

SOV/16-59-6-15/46

Electron Microscopic Study of the Morphological Changes in STI Anthrax Vaccine Spores Under the Influence of Certain Disinfectants

vegetative forms of microbes, is due to their possessing a strong impermeable membrane. The strong sporicidal action of disinfectant mixture Nr 2, then, may be due to rapid penetration of the formaldehyde into the spores due to rarefaction and increased permeability of their membranes because of the action of the monochloramine.

SUBMITTED: December 14, 1958

Card 2/2

APPROVED FOR RELEASE: 03/20/2001 CIA-RDP86-00513R000619310017-3"

"APPROVED FOR RELEASE: 03/20/2001 CIA-RDP86-00513R000619310017-3

SOV/16-59-6-16/46

17(2,12)

AUTHORS: Ivashkevich, P.A., Belokhvostov, S.D. and Rozhkov, G.I.

TITLE: The Morphological Features of STI Anthrax Vaccine Spores and Their Resistance to Certain Disinfectants

PERIODICAL: Zhurnal mikrobiologii, epidemiologii i immunobiologii, 1959, Nr 6, pp 78-81 (USSR)

ABSTRACT: I.Ye. Minkevich, V.I. Vashkov, etc. believe that the membrane of a Bacillus anthracis spore consists of two layers. Kneysi maintains that the membranes of spores from different strains of the same species may consist of a differing number of layers. N.K. Vereninova noted that, in growing, some Bacillus anthracis spores shed a layer, while others do not. The present authors studied Bacillus anthracis spores under an EM-3 electron microscope with a magnification factor of 5,000-1,000 and an accelerating voltage of up to 50 kv. The studies revealed three types of spores. Type I were oval, regular with a smooth surface, type II diverged from a true oval and had a rough, wrinkled surface. In type III this process had gone still further, leaving the spores with a very rough surface composed of marked prominences and distinct polymorphic features. The resistance of all three types to the following disinfectants

Card 1/2

APPROVED FOR RELEASE: 03/20/2001 CIA-RDP86-00513R000619310017-3"

"APPROVED FOR RELEASE: 03/20/2001 CIA-RDP86-00513R000619310017-3

IVASHKEVICH, ~~P.A.;~~ MIKHAYLOV, B.Ya.; ROZHKOV, G.I.; TAMARIN, A.L.

Determining the viability of spores in anthrax STI vaccine by means of microcultures. Zhur.mikrobiol.epid.i immun. 30 no.10:72-75 O '59. (MIRA 13:2)

(ANTHRAX immunol.)
(VACCINES)

APPROVED FOR RELEASE: 03/20/2001 CIA-RDP86-00513R000619310017-3"

"APPROVED FOR RELEASE: 03/20/2001 CIA-RDP86-00513R000619310017-3

IVASHKEVICH, P.A.; MIKHAYLOV, B.Ya.; ROZHKOV, G.I.; TAMARIN, A.L.

On the potency period and methods for the control of STI anthrax vaccine. Zhur.mikrobiol.,epid.i immun. 30 no.11:45-47 N '59. (MIRA 13:3)

(ANTHRAX immunol.)
(VACCINES)

APPROVED FOR RELEASE: 03/20/2001 CIA-RDP86-00513R000619310017-3"

"APPROVED FOR RELEASE: 03/20/2001 CIA-RDP86-00513R000619310017-3

BELOKHVOSTOV, S.D.; IVASHKEVICH, P.A.

Morphological changes in the spores of STI under the influence of some fumigants. Zhur.mikrobiol., epid. i immun. 33 no.3:82-86 Mr '62. (MIRA 15:4)
(BACILLUS ANTHRACIS) (FUMIGATION)

APPROVED FOR RELEASE: 03/20/2001 CIA-RDP86-00513R000619310017-3"

"APPROVED FOR RELEASE: 03/20/2001 CIA-RDP86-00513R000619310017-3

IVASHKEVICH, P.A.; BOCHAROV, A.P.

Morphological changes in bacteria under the effect of hexachlorophene. Report No.1. Anoptral microscopy. Zhur.mikrobiol., epid. i immun. 42 no.3:78-81 Mr '65. (MIRA 18:6)

APPROVED FOR RELEASE: 03/20/2001 CIA-RDP86-00513R000619310017-3"

"APPROVED FOR RELEASE: 03/20/2001 CIA-RDP86-00513R000619310017-3

IVASHKEVICH, P.A.; BOCHAROV, A.P.

Morphological changes in bacteria under the affect of hexachlorophene. Report No.2: Timed cinemicrography and electron microscopy. Zhur. mikrobiol., epid. i immun. 42 no.6:106-109 '65. (MIRA 18:9)

APPROVED FOR RELEASE: 03/20/2001 CIA-RDP86-00513R000619310017-3"

"APPROVED FOR RELEASE: 03/20/2001 CIA-RDP86-00513R000619310017-3

L 20721-66 EWP(j)/EWT(1)/EWT(m) RM/WW/JW

ACC NR: AP6007830 SOURCE CODE: UR/0120/66/000/001/0158/0162

AUTHOR: Denisov, Yu. N.; Ivashkevich, S. A.; Kalinichenko, V. V.

ORG: Joint Nuclear Research Institute (Ob'yedinennyy institut yadernykh issledovaniy)

TITLE: Magnetic field stabilizer with a broadband EPR sensor

SOURCE: Pribory i tekhnika eksperimenta, no. 1, 1966, 158-162

TOPIC TAGS: EPR, stabilizer

ABSTRACT: Previously used NMR sensors included electron tubes, transistors, and other short-life parts; such sensors could hardly be used in large permanent installations because of their inaccessibility for purposes of maintenance (tube replacements, etc.). Hence, a new type of sensor — a broadband EPR sensor — has been developed. In this sensor, only a specimen-containing absorption chamber and modulating coils are placed in the field of the magnet being stabilized. The SHF oscillator and signal recording equipment can be placed at a considerable distance from the magnet and connected with the chamber by means of a waveguide. The broadband chamber consists of a length of rectangular waveguide shorted by a choke

Card 1/2 UDC: 539.283:621.316.73

APPROVED FOR RELEASE: 03/20/2001 CIA-RDP86-00513R000619310017-3"

"APPROVED FOR RELEASE: 03/20/2001 CIA-RDP86-00513R000619310017-3

L 20721-66

ACC NR: AP6007830

plunger. The EPR signal (with a diphenylpicryl hydrazyl specimen) exceeds the NMR signal by thousands of times. Fields of 0.6—1.37-tesla can be stabilized. With a prestabilization of the magnet current within $(1-5) \times 10^{-2}$ %, the instability of the field is $(1-3) \times 10^{-3}$ % or less. A sketch of the sensor and principal electronic circuits are presented. Orig. art. has: 5 figures, 6 formulas, and 2 tables. [03]

SUB CODE: 18, 09 / SUBM DATE: 09Feb65 / ORIG REF: 003 / OTH REF: 004

ATD PRESS: 4223

Card 2/2

APPROVED FOR RELEASE: 03/20/2001 CIA-RDP86-00513R000619310017-3"

"APPROVED FOR RELEASE: 03/20/2001 CIA-RDP86-00513R000619310017-3

M

COUNTRY : USSR
CATEGORY : CULTIVATED PLANTS. General Problems.

ABS. JOUR. : REF ZHUR - BIOLOGIYA, NO. 4, 1959, No. 15542

AUTHOR : Palilov, A.I.; Demidova, G.F.; Ivashkevich, T.M.
INST. : Belorussian University
TITLE : The Time of Greatest Effectiveness of Supplementary Pollination of Self-pollinating Crops.

ORIG. PUB. : Uch. zap. Belorussk. un-t, 1957, vyp. 37, 223-225

ABSTRACT : In 1955 with supplementary pollination of narrow-leaved lupine with the pollen of another variety of the same species in the fully opened flower stage , the setting of seeds amounted to 186 % in comparison with free pollination, the insemination of the beans 106 %, the weight of 1000 seeds 115 % and the total mass of formed seeds 258 %, and in the closed flower bud phase these indices were 171, 99, 102 and 195 % respectively. Pre-pollination in the loose flower bud phase

CARD: 1/6

APPROVED FOR RELEASE: 03/20/2001 CIA-RDP86-00513R000619310017-3"

"APPROVED FOR RELEASE: 03/20/2001 CIA-RDP86-00513R000619310017-3

COUNTRY
CATEGORY .CULTIVATED PLANTS.

ABS. JOUR. : REF ZHUR - BIOLOGIYA, NO. 4, 1959,

No. 15542

AUTHOR :
INST. :
TITLE

ORIG. PUB. :

ABSTRACT : late-closed and early flower buds reduced the seed formation by 44 to 78 %. In case of pre-pollination of white lupine with narrow-leaved in the open blossom stage with the vexillum turned strongly backward, the percentage of seeds kept until harvesting was increased threefold, the insemination by 19 %, the seed size by 58 %, the total weight of seeds by 2½ times; with opening of the petals and straight position of the vexillum the seeds kept

CARD: 3/6

APPROVED FOR RELEASE: 03/20/2001 CIA-RDP86-00513R000619310017-3"

"APPROVED FOR RELEASE: 03/20/2001 CIA-RDP86-00513R000619310017-3

M

COUNTRY : CULTIVATED PLANTS.
CATEGORY :

ABS. JOUR. : REF ZHUR - BIOLOGIYA, NO. 4, 1959, No. 15542

AUTHOR :
INST. :
TITLE :

ORIG. PUB. :

ABSTRACT : until the harvest was 200 % of the control, seed size was increased only by 4 % and the insemination was reduced by 38 %.

The total harvest increment was 16 %. Pre-pollination in the phases of early, late closed and semi-opened flower buds had a negative value. The reduction of seed formation and insemination in case of pre-pollination with foreign pollen, the author explains by incongruity of the latter with the demands

CARD: 4/6

APPROVED FOR RELEASE: 03/20/2001 CIA-RDP86-00513R000619310017-3"

"APPROVED FOR RELEASE: 03/20/2001 CIA-RDP86-00513R000619310017-3

COUNTRY
CATEGORY CULTIVATED PLANTS. M

ABS. JOUR. REF ZHUR - BIOLOGIYA, NO. 4, 1959,

AUTHOR :
INST. :
TITLE : No.15542

ORIG. PUB. :

ABSTRACT of the mother flower in the early stages of the process of seed formation. The foreign pollen does not participate in forming the zygote and entire embryo of the seed, but rather in the process of their later development into seeds. The increase in the number of retained seeds must apparently be connected not with an increase of setting but with a reduction of shattering of ovaries. The principle of the greatest effectiveness of

CARD: 5/6

APPROVED FOR RELEASE: 03/20/2001 CIA-RDP86-00513R000619310017-3"

"APPROVED FOR RELEASE: 03/20/2001 CIA-RDP86-00513R000619310017-3

IVASHKEVICH, T.M.; KUPREVICH, V.F.; SHCHERBAKOVA, T.A.

Change in the composition of free amino acids in soil during the vegetation period. Dokl. AN BSSR 7 no.10:704-707 O '63. (MIRA 16:11)

1. Otdel fiziologii i sistematiki nizshikh rasteniy AN BSSR.

APPROVED FOR RELEASE: 03/20/2001 CIA-RDP86-00513R000619310017-3"

"APPROVED FOR RELEASE: 03/20/2001 CIA-RDP86-00513R000619310017-3

KUPREVICH, V.F.; IVASHKEVICH, T.M.; SHCHERBAKOVA, T.A.

Free amino acid content in peat-bog soil at various underground water levels. Dokl. AN BSSR 9 no.12:822-824 D '65. (MIRA 19:1)

1. Otdel fiziologii i sistematiki nizshikh rasteniy AN BSSR.

APPROVED FOR RELEASE: 03/20/2001 CIA-RDP86-00513R000619310017-3"

"APPROVED FOR RELEASE: 03/20/2001 CIA-RDP86-00513R000619310017-3

IVASHKEVICH, V.

Place the modernization of equipment under State Bank control. Den.i kred. 21 no.2:30-33 F '63. (MIRA 16:2)
(Banks and banking) (Technological innovations)

APPROVED FOR RELEASE: 03/20/2001 CIA-RDP86-00513R000619310017-3"

"APPROVED FOR RELEASE: 03/20/2001 CIA-RDP86-00513R000619310017-3

SOROCHKIN, Yu.N.; KHRENOV, E.I.; IVASHKEVICH, V.

The "Zaporozhets ZAZ-965A" automobile with a very small cylinder capacity. Biul.tekh.-ekon.inform.Gos.nauch.-issl.inst.nauch.i tekh.inform. 16 no.7:67-68 '63. (MIRA 16:8)
(Automobiles)

APPROVED FOR RELEASE: 03/20/2001 CIA-RDP86-00513R000619310017-3"

"APPROVED FOR RELEASE: 03/20/2001 CIA-RDP86-00513R000619310017-3

DUSHEVSKIY, P.L., inzh.; IVASHKEVICH, V.P., inzh.; SHCHERBIN, K.P., inzh.

Using hard alloys in drop forging. Mashinostroenie no.6:18-19 N-D '63. (MIRA 16:12)

APPROVED FOR RELEASE: 03/20/2001 CIA-RDP86-00513R000619310017-3"

"APPROVED FOR RELEASE: 03/20/2001 CIA-RDP86-00513R000619310017-3

SHUPIK, V.M., inzh.; IVASHKEVICH, V.P., inzh.

Multiple cold stamping. Mashinostroenie no.1:17-23 Ja-F '62. (MIRA 15:2)

1. Zaporozhskiy elektroapparatnyy zavod.
(Sheet-metal work)

APPROVED FOR RELEASE: 03/20/2001 CIA-RDP86-00513R000619310017-3"

"APPROVED FOR RELEASE: 03/20/2001 CIA-RDP86-00513R000619310017-3

SAMON'KIN, M.A., inzh.; IVASHKEVICH, V.P., inzh.

Dies for manufacturing parts with a single press blow. Mashinostroenie no.3:38-40 My-Je '62. (MIRA 15:7)

1. Avtozavod "Kommunar" Zaporozhskogo sovnarkhoza.
(Dies (Metalworking))

APPROVED FOR RELEASE: 03/20/2001 CIA-RDP86-00513R000619310017-3"

"APPROVED FOR RELEASE: 03/20/2001 CIA-RDP86-00513R000619310017-3

IVASHKEVICH, V.P., inzh.; KESTEL'MAN, V.I., inzh.

Use of plastics in equipment. Mashinostroenie no.4:39-41 Jl-Ag '62. (MIRA 15:9)

1. Zaporozhskiy sovet narodnogo khozyaystva.
(Plastics)

APPROVED FOR RELEASE: 03/20/2001 CIA-RDP86-00513R000619310017-3"