"APPROVED FOR RELEASE: 08/10/2001 CIA-RDP86-00513R000620120005-5

ACC NR: AP6035712 (A) SOURCE CODE: UR/0413/66/000/019/0058/0058

INVENTOR: Knyazhinskiy, Z. O.: Raychuk, Yu. I.: Kalinushkin, P. N.: Osadchiy, Ya. P.: Usachev, I. M.

ORG: none

TITLE: Mill housing for continuous welding of large-diameter tubes. Class 21, No. 186585 [announced by the All-Union Research and Design Technological Institute of the Piping Industry (Vsesoyznyy nauchno-issledovatel'skiy i konstruktorsko-tekhnologicheskiy institut trubnoy promyshlennosti)]

SOURCE: Izobreteniya, promyshlennyye obraztsy, tovarnyye znaki, no. 19, 1966, 58

TOPIC TAGS: welding, ~~continuous welding, heavy-tube welding~~, welding equipment

ABSTRACT: This Author Certificate introduces a mill housing for continuous welding of a large-diameter tubes (see Fig. 1) comprising a frame and a sizing device. To ensure and maintain close contact between the edges to be welded, the sizing device is

Card 1/2 UDC: 621.774.21.06

APPROVED FOR RELEASE: 08/10/2001 CIA-RDP86-00513R000620120005-5"

"APPROVED FOR RELEASE: 08/10/2001 CIA-RDP86-00513R000620120005-5

ACC NR: AP6035712

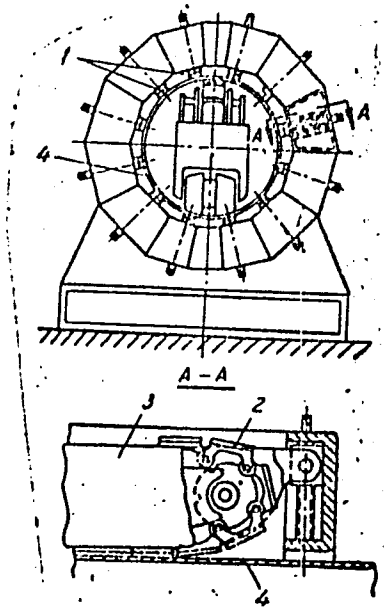

Fig. 1. Mill housing

1 - Endless chains; 2 - chain links; 3 - longitudinal guide; 4 - tube.

formed by a set of endless chains whose links rest on rigid guides and form a die which moves together with the tube. Orig. art. has: 1 figure.

SUB CODE: 13/ SUBM DATE: 15Feb65/ ATD PRESS: 5106

Card 2/2

APPROVED FOR RELEASE: 08/10/2001 CIA-RDP86-00513R000620120005-5"

"APPROVED FOR RELEASE: 08/10/2001 CIA-RDP86-00513R000620120005-5

KALINYAK, A. A., V. I. KRASOVSKIY and V. B. NIKONOV.

Nablyudeniye oblasti galakticheskogo tsentra v infrakrasnykh luchakh (Observation of the Galactic Center Region in Infrared Rays). Akademiya Nuak SSSR. Doklady, 1949, v. 66, no. 1, p. 25-28, diagr., 6 refs.

AS262.S3663 v. 66

APPROVED FOR RELEASE: 08/10/2001 CIA-RDP86-00513R000620120005-5"

"APPROVED FOR RELEASE: 08/10/2001 CIA-RDP86-00513R000620120005-5

KALINYAK A.A.

1ST AND 2ND ORDERS

PROCESSES AND PROPERTIES INDEX

3RD AND 4TH ORDERS

SA

A52

523.755

7783. Observation in infrared rays of the solar corona without an eclipse. A. A. KALINYAK. *Dokl. Akad. Nauk, SSSR*, 73 (No. 4) 687-2 (1950) *In Russian.*

Gives results of photographing the solar corona in infrared rays without an eclipse. This method considerably reduces the effect of the scattered atmospheric light; at the same time lines were observed corresponding to a higher degree of ionization than in the visible region. The photographing of the solar corona was carried out by using an electronic-optical transformer connected with the eyepiece part of the "extra-ecliptic" coronograph. The photographs obtained show that at a distance of 6-7 arc minutes from the edge of the sun a luminescence of highly varying brightness can be observed.

F. LACHMAN

ASM-SLA METALLURGICAL LITERATURE CLASSIFICATION

APPROVED FOR RELEASE: 08/10/2001 CIA-RDP86-00513R000620120005-5"

"APPROVED FOR RELEASE: 08/10/2001 CIA-RDP86-00513R000620120005-5

KALINYAK, A.A.

Apr 52

USSR/Astronomy - Infrared Photography of Galaxy

"Infrared Radiation of the Milky Way," Ye. N. Pavlov, Phys Inst, Leningrad State U

"Priroda" No 4, pp 107-109

Realnature and structure of Galaxy were explained in 1948 at Crimean Astrophys Obs by observations in infrared of A.A. Kalinyak, V.I. Krasovskiy and V.B. Nikofonov, using photosensitive cathodes. In 1950 at the same observatory, S.F. Rodionov and I.O. Frishman used photocells to photograph in infrared the Galaxy and found this radiation to be 2-10% of the background glow.

215T1

APPROVED FOR RELEASE: 08/10/2001 CIA-RDP86-00513R000620120005-5"

"APPROVED FOR RELEASE: 08/10/2001 CIA-RDP86-00513R000620120005-5

KALINYAK, A. A.

USSR/Physics - Spectral Analysis

Card : 1/1

Authors : Kalinyak, A. A. and Fedorovich, L. G.

Title : Effect of an electrical field on the absorption spectrum of cupric oxide at low temperature

Periodical : Dokl. AN SSSR, 96, Ed. 6, 1137 - 1138, June 1954

Abstract : Phenomena occuring in an electrical field and their effect on the absorption spectrum of cupric oxide, cooled by submerging in liquid nitrogen, were investigated. Strong electrical fields, reaching several tens of kv per cm reveal the following two phenomena simultaneously: 1) the appearance in the spectrum of new very-weak lines which coincide with none of the known lines and 2) the lines of the first "exciton" series are being displaced toward the long-wave side of the spectrum and expand. It was established that the position of these lines in the spectrum does not depend or depends only slightly upon the field intensity. Four references. Photos, table.

Institution : The S. I. Vavilov State Optical Institute

Presented by : Academician A. A. Lebedev, March 6, 1954

APPROVED FOR RELEASE: 08/10/2001 CIA-RDP86-00513R000620120005-5"

"APPROVED FOR RELEASE: 08/10/2001 CIA-RDP86-00513R000620120005-5

BABYKIN, M.V.; KALINYAK, A.A.; PLAKHOV, A.G.

Results of observations of the solar corona according to data on the solar eclipse of June 30, 1954. Izv.GAO 20 no.3:67-74 '56. (MIRA 13:5)
(Sun--Corono) (Eclipses, Solar--1954)

APPROVED FOR RELEASE: 08/10/2001 CIA-RDP86-00513R000620120005-5"

"APPROVED FOR RELEASE: 08/10/2001 CIA-RDP86-00513R000620120005-5

KALINYAK, A. A., L. A. KAMIONKO and M. M. BUTELAVA

"The First Utilization of Electron-Optical Transducer in Photographing Mars in the Pulkovo Observatory."

Report presented at the Plenary Meeting of the Committee of Planetary Physics, Council of Astronomers, Khar'kov, 20-22 May 1958.
(Vest. Ak Nauk SSSR, 1958, No. 8, p. 113-114)

APPROVED FOR RELEASE: 08/10/2001 CIA-RDP86-00513R000620120005-5"

"APPROVED FOR RELEASE: 08/10/2001 CIA-RDP86-00513R000620120005-5

84577

3.1240

S/035/60/000/009/010/016
A001/A001

Translation from: Referativnyy zhurnal, Astronomiya i Geodeziya, 1960, No. 9, pp. 69-70, # 9083

AUTHORS: Butslov, M.M., Kalinyak, A.A., Kamionko, L.A.

TITLE: Results of the Photometric Processing of Mars Photographs Taken in the Near Infrared Region of Spectrum

PERIODICAL: Izv. Gl. astron. observ. v Pulkove, 1958, Vol. 21, No. 3, pp. 63-71 (Engl. summary)

TEXT: Photographs of Mars were taken from August 28 to September 18, 1956, by means of an electronic-optical converter mounted on the MTM-500 reflector of the Krymskaya astrofizicheskaya observatoriya (Crimean Astrophysical Observatory) (equivalent focus - 60 m). The diameter of the image was up to 7.5 mm. Effective wavelengths were λ 8,400 (exposure - 0.02 sec) and λ 9,830 (exposure - 0.1 sec). Some photographs were photometrically compared with the brightness of the lunar ring formation Plato, and the brightness of the latter was compared with that of the Sun by means of a screen with small apertures producing attenuation by a factor of 96,200. Mars albedo was obtained as the average from 100 points. The

Card 1/2

APPROVED FOR RELEASE: 08/10/2001 CIA-RDP86-00513R000620120005-5"

"APPROVED FOR RELEASE: 08/10/2001 CIA-RDP86-00513R000620120005-5

84577

S/035/60/000/009/010/016
A001/A001

Results of the Photometric Processing of Mars Photographs Taken in the Near Infrared Region of Spectrum

albedo values are as follows:

A	Λ
8,400	4.16×10^{-2}
9,830	4.02×10^{-2}

The graph with isophots is presented. At the edge of the disc, isophots approach concentric circles in their shape. This fact permitted the study of the mean brightness course B_M for the disc zone with incidence angles of solar rays i greater than 50°. This course can be approximately represented by the formula: $B_M = B_\Pi(0)\cos i + B_P(0)\sec i$ which is derived from the V.G.Fesenkov formula for small values of the atmosphere optical thickness. $B_\Pi(0) = 0.74$ is the mean brightness of the Martian surface at $i = 0$; $B_P(0) = 0.22$ is the brightness of light scattered in the atmosphere at the same i value. The fact that the sum of these values is close to unity indicates that intrinsic absorption in the Martian atmosphere is insignificant. The correlation is discussed between the brightness distribution of visual and infrared rays over the disc. I.I. Lebedeva

Translator's note: This is the full translation of the original Russian abstract.

Card 2/2

APPROVED FOR RELEASE: 08/10/2001 CIA-RDP86-00513R000620120005-5"

"APPROVED FOR RELEASE: 08/10/2001 CIA-RDP86-00513R000620120005-5

3(1)

AUTHORS: Butslov, M. M., Zavoyskiy, Ye. K., Corresponding Member, Academy of Sciences, USSR, Kalinyak, A. A., Nikonov, V. B., Prokof'yeva, V. V., Smolkin, G. Ye.

SOV/20-121-5-13/50

TITLE: The Use of Multistage Electron-Optical Light Amplifiers in Astrophysics (O primenenii mnogokaskadnykh elektronno-opticheskikh usiliteley sveta v astrofizike)

PERIODICAL: Doklady Akademii nauk SSSR, Vol 121, Nr 5, pp 815 - 818 (USSR)

ABSTRACT: This paper investigates some problems connected with the application of electron-optical light amplifiers in astrophysics. The authors estimate the increase in efficiency of the utilization of the photon flux with respect to the usual photographic method. Under the investigated conditions, and in the case of equal dimensions of the pictures, the efficiency of the electron-optical method is by $\sim 4.10^3$ times higher than in ordinary photography. An increase in scale on the photocathode of the light amplifier reduces the increase in sensitivity of the electron-optical method compared with a usual photographic plate by 160 times. An estimation of the sensitivity

Card 1/3

APPROVED FOR RELEASE: 08/10/2001 CIA-RDP86-00513R000620120005-5"

"APPROVED FOR RELEASE: 08/10/2001 CIA-RDP86-00513R000620120005-5

of the light amplifiers gives a value of the order of 1000. The use of an electron-optical amplifier usually cannot increase the penetration range of the telescope. But the reduction of the times of exposure by hundreds of times of its amount due to the high sensitivity of the light amplifier essentially changes the possibilities of the astrophysical investigation. The short times of exposure permit the investigation of rapidly varying processes of very faintly visible objects and a considerable increase of the utilization coefficient of the astrophysical instruments. The reduction of the times of exposure is very important for astrospectroscopy. The above-discussed considerations are confirmed by the results obtained by experiments carried out by the authors in the Krymskaya astrofizicheskaya observatoriya AN SSSR (Crimean Astrophysical Observatory AS USSR). The proper noises of the light amplifier may be neglected in comparison with the background of the sky. According to the experimental values, the use of the light amplifier permitted a reduction of the times of exposure approximately to a thousandth part of their former amount

APPROVED FOR RELEASE: 08/10/2001 CIA-RDP86-00513R000620120005-5"

"APPROVED FOR RELEASE: 08/10/2001 CIA-RDP86-00513R000620120005-5

The Use of Multistage Electron-Optical Light Amplifiers in Astrophysics SOV/20-121-5-13/50

which satisfactorily agrees with the above-given estimate. A figure shows the photographs of 2 extragalactic nebulae which were taken by means of a light amplifier. There are 4 figures, 1 table, and 6 references, 3 of which are Soviet.

ASSOCIATION: Krymskaya astrofizicheskaya observatoriya Akademii nauk SSSR (Crimean Astrophysical Observatory AS USSR) Glavnaya astronomicheskaya observatoriya Akademii nauk SSSR (Astronomical Main Observatory, AS USSR)

SUBMITTED: April 14, 1958

Card 3/3

APPROVED FOR RELEASE: 08/10/2001 CIA-RDP86-00513R000620120005-5"

"APPROVED FOR RELEASE: 08/10/2001 CIA-RDP86-00513R000620120005-5

KALINYAK, A. A. and KAMIONKO, L. A.

Micrometric Analysis of the Emission Flash in the Region of the Central Peak of the Crater Alphonsus According to the Spectrogram.

report presented at the International Symposium on the moon, held at the Pulkovo Observatory, Leningrad, USSR, 6-8 Dec 1960.

APPROVED FOR RELEASE: 08/10/2001 CIA-RDP86-00513R000620120005-5"

"APPROVED FOR RELEASE: 08/10/2001 CIA-RDP86-00513R000620120005-5

KALINYAK, A. A.

"Spectral-Photometric Analysis Of The Emission Flare In The Central Peak Of Alphonsus On Nov. 3, 1958."

paper presented at IAU Symposium on the Moon, Leningrad, USSR, 6-8 Dec. 60.

A microphotometric analysis was made of the spectrogram obtained by N. A. Kozyrev on Nov. 3, 1958, during which an emission flare was observed in the region of the central peak of Alphonsus. The results give grounds to consider that the emission was of a purely fluorescence character in a gas escaping from the depths of the Moon. According to the general character of intensity distribution, the flare spectrum is similar to the emission of a cometary head. Several mixima on the intensity curve may be identified with the Swan C_2 molecular bands. A continuous component of radiation was not detected.

APPROVED FOR RELEASE: 08/10/2001 CIA-RDP86-00513R000620120005-5"

"APPROVED FOR RELEASE: 08/10/2001 CIA-RDP86-00513R000620120005-5

32435

S/033/61/038/006/004/007
E133/E435

3,2500 (1080, 1395)

AUTHORS: Kalinyak, A.A., Kamionko, L.A.

TITLE: A microphotometric analysis of the emission flare near the central peak of the crater Alphonsus recorded on the spectrogram of November 3, 1958

PERIODICAL: Astronomicheskiy zhurnal, v.38, no.6, 1961, 1085-1098 + 1 plate

TEXT: The spectrogram was obtained by N.A.Kozyrev and V.I.Ezersky (Ref.1: Priroda, no.3, 1959). The dispersion was 33 Å/mm at Hβ. The emission is particularly noticeable in the region 4540 to 4740 Å with a maximum at 4660 Å. A second smaller maximum is observed near 4400 Å. The width of the emission corresponds to about 3 km on the Moon. Table 1 gives a list of the best verified intensity peaks in the emission. These correspond, presumably, to molecular bands. It should be added that there is another probable maximum at 4695 Å, but a plate defect hides it. The emission band does not coincide exactly in direction with the dispersion. The emission spectrum appears to be similar to that described for Halley's comet (Ref.3: Bobrovnikoff, Publ. Lick Observ., v.17, 1931, 309) and should be

Card 1/3

APPROVED FOR RELEASE: 08/10/2001 CIA-RDP86-00513R000620120005-5"

"APPROVED FOR RELEASE: 08/10/2001 CIA-RDP86-00513R000620120005-5

32435
S/033/61/038/006/004/007
E133/E435

A microphotometric analysis ...

explicable in terms of a gaseous plasma emitted by the lunar interior. The authors next turn to the identification of the supposed molecular bands. Table 2 compares wavelengths of observed maxima with the heads of some of the Swan bands of C_2. A comparison of a microphotometer tracing of Comet 1948 XI (Ref.6: N.N.Sytinskaya, Observations of the Moon. GITTL, M. 1956) with the present work, indicates that the maxima have a similar structure. The major problem in explaining the emission peaks as due to the Swan bands is that the (0 - 0) band at 5165 Å is absent and the (1 - 0) band is not certainly present. The authors point out that the amount of emission, at any wavelength, depends on the balance of two opposite processes. The first is emission due to excitation of the gas by direct sunlight and the second is absorption of sunlight reflected from the lunar surface. An approximate calculation indicates that the absence of the (0 - 0) band (and the weakness of the (1 - 0) band) can probably be explained by the predominance of the second effect at these wavelengths. It is pointed out that differences must appear in the spectra of comets and this lunar flare since the gas

Card 2/3

APPROVED FOR RELEASE: 08/10/2001 CIA-RDP86-00513R000620120005-5"

"APPROVED FOR RELEASE: 08/10/2001 CIA-RDP86-00513R000620120005-5

temperatures are quite different. There was no trace on the spectrogram of the intensity varying monotonically with temperature, as would be expected for thermal radiation. The authors thank Professor G. Herzberg (National Research Council of Canada) for his guidance. The microphotometer used was modernized by the employee of GAO S.I.Bulanov. H.H.Sytinskaya is mentioned in the article in connection with her contributions in this field. There are 8 figures, 3 tables and 7 references: 2 Soviet-bloc and 5 non-Soviet-bloc. The four most recent references to English language publications read as follows: Ref.2: M.Minaert, G.F.W.Mulders, J.Hautgast, Photometric Atlas of the Solar Spectrum, Amsterdam, 1940; Ref.4: P.Swings, Vistas in Astronomy, 2, London - New York, 1956; Ref.5: P.Swings, L.Haser, Atlas of Representative Cometary Spectra, Louvain, ARDC, 1956; Ref.7: A.McKellar, J.L.Climenhaga, Contributions from the Dominion Astrophysical Observatory, no.28, 1952.

ASSOCIATION: Glavnaya astronomicheskaya observatoriya Akademii nauk SSSR (Main Astronomical Observatory AS USSR)

APPROVED FOR RELEASE: 08/10/2001 CIA-RDP86-00513R000620120005-5"

"APPROVED FOR RELEASE: 08/10/2001 CIA-RDP86-00513R000620120005-5

L 6343-66 EWT(1) GW

ACC NR: AP5025622 SOURCE CODE: UR/0033/65/042/005/1067/1069

AUTHOR: Kalinyak, A. A.

ORG: Main Astronomical Observatory, Academy of Sciences SSSR (Glavnaya astronomicheskiya observatoriya Akademii nauk SSSR)

TITLE: Data on the spectra of the Galilean satellites of Jupiter

SOURCE: Astronomicheskiy zhurnal, v. 42, no. 5, 1965, 1067-1069

TOPIC TAGS: Jupiter planet, planetary satellite, spectral line, Fraunhofer line

ABSTRACT: A spectral investigation of the Galilean satellites of Jupiter was made at the Crimean Astrophysical Observatory in August-September 1963. A MTM-500 telescope with a spectrograph having a diffraction grating ensuring a dispersion of 20 Å/mm was used in the observations. Use of an image converter with brightness amplification stages resulted in spectrograms with a normal blackening density despite relatively short exposures of about 10-15 seconds; many spectrograms were obtained in a rather wide spectral range. Some of these spectrograms have lines

UDC: 523.45

Card 1/2

APPROVED FOR RELEASE: 08/10/2001 CIA-RDP86-00513R000620120005-5"

"APPROVED FOR RELEASE: 08/10/2001 CIA-RDP86-00513R000620120005-5

L 6343-66
ACC NR: AP5025622

which cannot be identified with the solar Fraunhofer spectrum. Spectrograms are shown of Io, Ganymede, Europa, and the sun. All spectrograms were obtained on the same day. Several lines not present in the solar spectrum can be detected on the microphotometric records in the spectral region from 5600 Å to 6100 Å. Particularly worthy of note are the new lines that appear near the sodium doublet, in the spectral region free of Fraunhofer lines where blending with solar lines does not occur. Some of these lines may be spurious and no attempt is made to identify the lines. Further, the analysis of observations is incomplete. These new lines owe their origin to matter in a gaseous state, forming atmospheres of the Jovian satellites. "In conclusion the author expresses deep appreciation to V. V. Prokof'yeva and V. N. Dontsov for assistance in preparation for and implementing the observations". Orig. art. has: 1 figure, 1 table.

SUB CODE: AS/ SUBM DATE: 25Jan65/ ORIG REF: 000/ OTH REF: 001

nw

Card 2/2

APPROVED FOR RELEASE: 08/10/2001 CIA-RDP86-00513R000620120005-5"

"APPROVED FOR RELEASE: 08/10/2001 CIA-RDP86-00513R000620120005-5

SHTYRKINA, S.; GOLOVCHENKO, N.; TUZHILKIN, F.; KALINYAK, K.; KHRZHANOVSKIY, I.; UGLYANITSA, G. starshiy ekonomist; FISENKO, P.

Help collective farms to strengthen their economy and finances. Den. i kred. 20 no.2:67-79 F '62. (MIRA 15:2)

1. Zamestitel' upravlyayushchego Tatarskoy respublikanskoy kontoroy Gosbanka (for Shtyrkina) 2. Rukovoditel' kreditnoy gruppy Terebovlyanskogo otdeleniya Gosbanka Ternopol'skoy oblasti (for Kalinyak). 3. Zamestitel' upravlyayushchego Zaporozhskoy kontoroy Gosbanka (for Rogal'skiy). 4. Zamestitel' upravlyayushchego Omskoy kontory Gosbanka (for Khrzhanovskiy). 5. Stavropol'skaya kontora Gosbanka (for Uglyanitsa). 6. Kreditnyy inspektor Ostrogozhskogo otdeleniya Gosbanka Voronezhskoy oblasti (for Fisenko).

(Banks and banking)
(Collective farms--Finance)

APPROVED FOR RELEASE: 08/10/2001 CIA-RDP86-00513R000620120005-5"

"APPROVED FOR RELEASE: 08/10/2001 CIA-RDP86-00513R000620120005-5

KALINYAK, M. I.

124-11-13064

Translation from: Referativnyy Zhurnal, Mekhanika, 1957, Nr. 11, p. 112 (USSR)

AUTHOR: Kalinyak, M. I.

TITLE: The Pure Bending of a Thin Plate with Two Equal Circular Cut-Outs. (Chistyy izgib tonkoy plity s dvumya ravnymi krugovymi otverstiyami)

PERIODICAL: Nauch. zap. L'vovsk. politekhn. in-ta, 1956 (1957), Nr 38, pp 141-148. Ukrainian.

ABSTRACT: In terms of a system of bi-polar coordinates, a solution is given for the problem of the transverse bending of a thin, elastic plate which is weakened by two circular cut-outs having the same radius. The case is studied when the plate is subjected to pure bending at infinity.

The values of the maximal contour values of the bending moments are calculated for various ratios between the cut-out radii and the distance between their centers.

(Ya. S. Uflyand)

Card 1/1

APPROVED FOR RELEASE: 08/10/2001 CIA-RDP86-00513R000620120005-5"

"APPROVED FOR RELEASE: 08/10/2001 CIA-RDP86-00513R000620120005-5

L 13602-66 EWT(d)/EWT(m)/ETC(F)/EWG(m)/EPF(n)-2/EWP(v)/EWP(t)/EWP(k)/EWP(h)/EWP(b)/EWP(l) IJP(c)

ACC NR: AP6000997 JD/JG SOURCE CODE: UR/0286/65/000/022/0062/0062

AUTHORS: Popov, V. K.; Popovich, B. A.; Kalinychev, M. N.

ORG: none

TITLE: Apparatus for observing the melting process of metals and alloys in a vacuum furnace. Class 40, No. 176425

SOURCE: Byulleten' izobreteniy i tovarnykh znakov, no. 22, 1965, 62

TOPIC TAGS: metallurgic process, metallurgy, metal melting, refractory metal, metallurgic furnace

ABSTRACT: This Author Certificate presents an apparatus for observing the melting process of refractory metals and alloys in a vacuum furnace. The apparatus has the form of a hollow casing (see Fig. 1). To prevent the fouling of the window glass by the products of melting, a cylindrical drum pierced by cutouts is mounted in the opening of the casing. The cutouts run perpendicularly to the drum axis.

Card 1/2 UDC: 669.042

APPROVED FOR RELEASE: 08/10/2001 CIA-RDP86-00513R000620120005-5"

"APPROVED FOR RELEASE: 08/10/2001 CIA-RDP86-00513R000620120005-5

L 13602-66

ACC NR: AP6000997

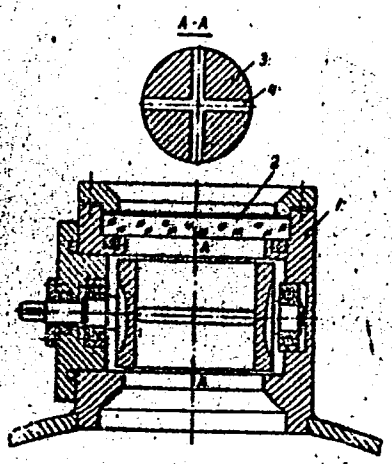

Fig. 1. 1 - Metallic hollow casing;
2 - window;
3 - cylindrical drum;
4 - cutouts.

Orig. art. has: 1 figure.

SUB CODE: 13/ SUBM DATE: 12May64

Card 2/2

APPROVED FOR RELEASE: 08/10/2001 CIA-RDP86-00513R000620120005-5"

"APPROVED FOR RELEASE: 08/10/2001 CIA-RDP86-00513R000620120005-5

22(3)

SOV/176-58-7-5/17

AUTHOR: Kalinyuk, I., Colonel

TITLE: Conscientiousness - the Main Condition for a High Degree of Preparedness of the Trainees (Soznatel'nost' - vazhneysheye usloviye vysokoy podgotovki kursantov) From a Conversation With the Commander of a Company of Cadets (Iz besedy s komandirom roty kursantov)

PERIODICAL: Voyenno-inzhenernyy zhurnal, 1958, 102, Nr 7, pp 15-16 (USSR)

ABSTRACT: The author reports an account given to him by a company commander of cadets of the technical engineering branch, V.A. Drobinin, of the methods used in training his company. He paid special attention to the training of each member of the company, taking into consideration individual characteristics, and endeavouring to develop in him a conscientiousness and sense of responsibility towards his work. This was done with the help of the Komsomol organisation. He

Card 1/2

APPROVED FOR RELEASE: 08/10/2001 CIA-RDP86-00513R000620120005-5"

"APPROVED FOR RELEASE: 08/10/2001 CIA-RDP86-00513R000620120005-5

LAKOMSKIY, V.I.; KALINYUK, N.N.

Hydrogen solubility in liquid titanium. Avtom. svar. 16 no.9: 31-35 S '63. (MIRA 16:10)

1. Institut elektrosvarki im. Ye.O.Patona AN UkrSSR.

APPROVED FOR RELEASE: 08/10/2001 CIA-RDP86-00513R000620120005-5"

"APPROVED FOR RELEASE: 08/10/2001 CIA-RDP86-00513R000620120005-5

L 14548-66 EWT(m)/EPF(n)-2/T/EWP(t)/EWP(b) IJP(c) JD/WW/JG

ACC NR: AP6002429 SOURCE CODE: UR/0020/65/165/005/1091/1092

AUTHOR: Lakomskiy, V. I.; Kalinyuk, N. N.

ORG: Electric Welding Institute im. Ye. O. Paton, Academy of Sciences UkrSSR (Institut elektrosvarki Akademii nauk UkrSSR)

TITLE: Hydrogen solubility in liquid niobium

SOURCE: AN SSSR. Doklady, v. 165, no. 5, 1965, 1091-1092

TOPIC TAGS: niobium, liquid niobium, solid niobium, hydrogen solubility

ABSTRACT: Small niobium specimens were levitation melted in a mixture of hydrogen, whose partial pressure was varied from 7 to 62 mm Hg, argon, and helium and brought to a temperature of 2873—2923, 2931—2965, 2982—3014, or 3073—3093 K. After the equilibrium between hydrogen in the gaseous phase and in liquid niobium had been established for a certain range of temperatures, the metal was cast in a copper mold. It was found that the solubility of hydrogen in liquid niobium depends on temperature. The dependence can be expressed by the equation $\lg S_{50} = 1620/T + 0.9993$, where S_{50} is the solubility of hydrogen in liquid niobium at a partial pressure of 50 mm Hg, and T is the absolute temperature (°K). The solubility of hydrogen in liquid niobium is higher than in solid niobium but in both cases it decreases with increasing temperature. The rate of this decrease in liquid niobium is lower than that in solid niobium. At the melting point the solubility changes abruptly. The calculated heat

Card 1/2 UDC: 541.8:669.788:546.882

APPROVED FOR RELEASE: 08/10/2001 CIA-RDP86-00513R000620120005-5"

"APPROVED FOR RELEASE: 08/10/2001 CIA-RDP86-00513R000620120005-5

L 14548-66

ACC NR: AP6002429

of dissolution of hydrogen in liquid niobium amounts to 14,800 cal per mol of hydrogen. Orig. art. has: 1 figure. [WW]

SUB CODE: 11/ 07/ SUBM DATE: 12Apr65/ ORIG REF: 001/ OTH REF: 004/ ATD PRESS: 4199

Card 2/2

APPROVED FOR RELEASE: 08/10/2001 CIA-RDP86-00513R000620120005-5"

"APPROVED FOR RELEASE: 08/10/2001 CIA-RDP86-00513R000620120005-5

L 38979-66 EWT(m)/T/EWP(t)/ETI IJP(c) JD/WW/JW/HW/JG

ACC NR: AP6013369 SOURCE CODE: UR/0370/66/000/002/0149/0155

AUTHOR: Lakomskiy, V. I. (Kiev); Kalinyuk, N. N. (Kiev)

ORG: none

TITLE: Solubility of hydrogen in liquid titanium and nickel

SOURCE: AN SSSR. Izvestiya. Metally, no. 2, 1966, 149-155

TOPIC TAGS: hydrogen, solubility, titanium, nickel, nonferrous ~~liquid~~ metal alloy, liquid metal

ABSTRACT: The solubility of hydrogen in liquid titanium was determined in the 2103-2580°K range at hydrogen pressures of 8-60 mm by the quenching method. Under these conditions, the system did not deviate from Sievert's law. The heat of solution of hydrogen in liquid titanium was found to be 21,680 cal/mole H_2. For β titanium, the range where Sievert's law applies at 1250°K is bounded by a concentration of 10 at.% H_2 in the metal, corresponding to a hydrogen pressure of 26.3 mm. The maximum concentrations are much lower for α titanium. As the temperature rises, the range of applicability of Sievert's law in the H_2-Ti system expands. It is postulated that the dissolution of hydrogen in liquid Ti will produce ideal solutions up to 1 atm H_2 pressure. Comparison of the free energies of solution of hydrogen in solid (β) and liquid Ti at the melting point shows that the free energy and solubility of H_2 increase from solid to liquid Ti because of a sharp increase in the entropy of the

Card 1/2 UDC: 669.788:541.8

APPROVED FOR RELEASE: 08/10/2001 CIA-RDP86-00513R000620120005-5"

"APPROVED FOR RELEASE: 08/10/2001 CIA-RDP86-00513R000620120005-5

L 38979-66

ACC NR: AP6013369

27

system. The hydrogen solubility in liquid nickel was studied in the range of -196 to 2900°K. The solubility curve goes through a maximum in the 2763-2773°K range. No deviations from Sievert's law were observed over the 15-40 mm range of hydrogen pressures and over the entire temperature range studied. The heat of solution of hydrogen in liquid nickel is 14,620 cal/mole H_2. As the temperature rises, the energy of reaction between hydrogen and nickel decreases. Orig. art. has: 5 figures, 4 tables, and 9 formulas.

SUB CODE: 11/ SUBM DATE: 23Oct64/ ORIG REF: 006/ OTH REF: 016

Card 2/2 MLP

APPROVED FOR RELEASE: 08/10/2001 CIA-RDP86-00513R000620120005-5"

"APPROVED FOR RELEASE: 08/10/2001 CIA-RDP86-00513R000620120005-5

L 30900-66 EWT(m)/T/EWP(t)/EWP(k)/ETI IJP(c) JD/JG

ACC NR: AP6021002 (A) SOURCE CODE: UR/0125/66/000/006/0021/0024

AUTHOR: Lakomskiy, V. I.; Kalinyuk, N. N.

ORG: Institut elektrosvarki im Ye. O. Paton AN UkrSSR

TITLE: Determination of hydrogen in niobium by the method of vacuum outgassing

SOURCE: Avtomaticheskaya svarka, no. 6, 1966, 21-24

TOPIC TAGS: niobium analysis, hydrogen determination, determination method, outgassing method, vacuum outgassing

ABSTRACT: A method for the determination of hydrogen content in niobium has been developed. The method is based on outgassing of thin niobium specimen in vacuum at 1400C. This temperature of outgassing was found experimentally. With niobium specimens 1.0—1.5 mm thick the outgassing is completed in 10 min. Heavier specimens require a longer time. The method has been successfully used for the last three years and showed a good reproducibility of results. Orig. art. has: 6 figures and 3 tables. [DV]

SUB CODE: 11/ SUBM DATE: 10Jun65/ ORIG REF: 004/ OTH REF: 006

Card 1/1 UDC: 621.791:669.293:669 788

APPROVED FOR RELEASE: 08/10/2001 CIA-RDP86-00513R000620120005-5"

"APPROVED FOR RELEASE: 08/10/2001 CIA-RDP86-00513R000620120005-5

KALINYUK, V.V., inzh., red.; BALASHOV, S.I., inzh., red.; BOGATYKH, Ya.D., inzh., red.GRIBIN, G.P., red.; PAVLOV, S.M., red.; KHUDYAKOV, A.K., red.; PETROVA, V.V., red. izd-va; IFTINKA, G.A., red. izd-va; KOMAROVSKAYA, L.A., tekhn. red.; RODIONOVA, V.M., tekhn. red.

[Construction specifications and regulations] Stroitel'nye normy i pravila. Moskva, Gosstroiizdat. Pt.3. Sec.A. ch.7. [Basic principles for organizing labor (SNiP III-A.7-62)] Organizatsiia truda; osnovnye polozheniia (SNiP III-A.7-62) 1962. 4 p. Pt.3. Sec.V. ch.4.[Regulations for production and inspection of work in stone construction (SNiP III-V.4-62)] Kamennye konstruktsii; pravila proizvodstva i priemki rabot. (SNiP III-V.4-62) 1963. 11 p. (MIRA 16:6)

1. Russia (1923- U.S.S.R.) Gosudarstvennyy komitet po delam stroitel'stva. 2. Gostroy SSSR (for Kalinyuk, Gribin). 3. Mezhduvedomstvennaya komissiya po peresmotru stroitel'nykh norm i pravil(for Balashov, Pavlov). 4. Nauchno-issledovatel'skiy institut organizatsii, mekhanizatsii i tekhnicheskoy pomoshchi stroitel'stvu Akademii stroitel'stva i arkhitektury SSSR (for Bogatykh, Khudyakov).

(Building, Stone)
(Construction industry)

APPROVED FOR RELEASE: 08/10/2001 CIA-RDP86-00513R000620120005-5"

"APPROVED FOR RELEASE: 08/10/2001 CIA-RDP86-00513R000620120005-5

L 8872-65 EWT(d)/EWT(...) EWP(k)/EWP(h)/EWP(q)/EWP(b) Pf-4 AEEC(b)/ASD(a)-3/
[illegible]
ACCESSION NR [illegible] S/3060/63/000/000/[illegible]

AUTHOR: Popov, V. K., Kalinyachev, M. N.

TITLE: Ion beam drilling of holes 18

SOURCE: AN SSSR. Tsentr. n.-i. lab. elektr. obrabotki metallov. Elektroiskrovaya obrabotka metallov. Moscow, 1963, 161-166

TOPIC TAGS: electric spark drilling, ion beam drilling, ion beam, ion gun, electrospark machining 18 14

ABSTRACT: While the electric spark method is widely used to machine holes of less than 100 mm in diameter, it is difficult to obtain diameters of less than 30 microns and impossible to obtain diameters below 25 microns due to the lack of rigidity in the thin wire which serves as the electrode. The chemical etching method is also inadvisable for obtaining holes with diameters of 20-30 microns, due to etching of the machined part itself, and this technique cannot be used with thick pieces. The authors therefore discuss the use of an accurately focused beam of ions directed at the metal surface to drill holes. The operating principle and energy characteristics of the ion gun are discussed (see Fig. 1 in the Enclosure). This is a twin-electrode optical system in which the anode has a cavity serving as the ion source and the cathode has a circular opening for the emergence of the ions.

Card 1/4

APPROVED FOR RELEASE: 08/10/2001 CIA-RDP86-00513R000620120005-5"

"APPROVED FOR RELEASE: 08/10/2001 CIA-RDP86-00513R000620120005-5

L 8872-65

ACCESSION NR: AT4012874

The piece to be machined is kept at the same potential as the cathode and is flush with its surface. The gas discharge principle, which is valid only in a specific pressure range and at high potential differences, is used. Since the interelectrode voltage is 0.5-15 kv and the strong electrical field penetrates deep within the anode cavity, the ions are forced out of the cavity, accelerated and focused into a very narrow conical beam with the focal point lying above the cathode. A small, evenly formed, conical depression appears on the part being machined, with a glistening inner surface corresponding to a surface finish of 9-10. Curves are presented relating voltage and current, as well as the power of the ion beam and pressure. The authors point out that the same working current can be achieved at various chamber pressures, but that at low vacuum the voltage is low and hence the power is negligible. As the vacuum is increased, the accelerating voltage rises and there is an increase in the kinetic energy of the ions, resulting in a more rapid removal of material from the machined part. At a vacuum of 0.05 mm Hg, the power of the beam can be increased to 10-13 watts. The rate of metal removal depends on the kinetic energy of the ions and the amplitude of the ion current; obviously, more rapid drilling can be achieved by an increase in voltage and current, but this also results in certain negative factors such as the production of hard X-rays and impairment of focusing. In practice, the voltage drop on the gun should not exceed 15 kv and the current should not exceed 1000 microamperes. Some of the other factors affecting the precision and surface finish of the holes are discussed.

Card 2/4

APPROVED FOR RELEASE: 08/10/2001 CIA-RDP86-00513R000620120005-5"

"APPROVED FOR RELEASE: 08/10/2001 CIA-RDP86-00513R000620120005-5

L 6872-65
ACCESSION NR: AT4012874

The structure of the parent material, for example, plays a decisive role. The authors conclude that primary attention should be given to increasing productivity and providing automatic control of the hole diameter. The method provides vacuum finish of the parent metal and eliminates the need for subsequent chemical treatment. In addition, it is applicable to both metallic and non-metallic materials. The principal disadvantage is its low productivity and the high degree of conicity of the holes. Orig. art. has: 1 table, 2 figures and 3 graphs.

ASSOCIATION: Tsentral'naya n.-i. laboratoriya elektricheskoy obrabotki metallov AN SSSR (Central Scientific Research Laboratory for the Electrical Processing of Metals)

SUBMITTED: 00 ENCL: 01

SUB CODE: MM, OP NO REF SOV: 005 OTHER: 000

Card 3/4

APPROVED FOR RELEASE: 08/10/2001 CIA-RDP86-00513R000620120005-5"

"APPROVED FOR RELEASE: 08/10/2001 CIA-RDP86-00513R000620120005-5

L 8872-65
ACCESSION NR: AT4012874

ENCLOSURE: 01

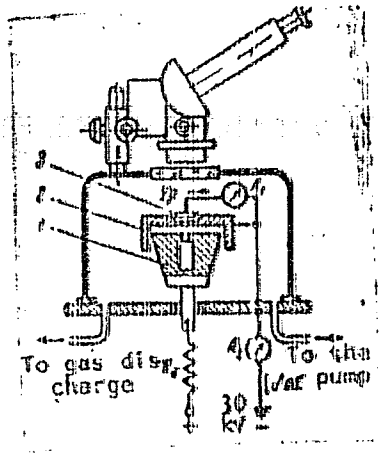

Fig. 1. Schematic diagram of ion gun
1. anode; 2. cathode; 3. machined part

Card 4/4

APPROVED FOR RELEASE: 08/10/2001 CIA-RDP86-00513R000620120005-5"

"APPROVED FOR RELEASE: 08/10/2001 CIA-RDP86-00513R000620120005-5

KALIS, B.

TECHNOLOGY

periodicals: HUTNIK Vol. 8, no. 11, Nov. 1958

KALIS, B. 125t: anniversary of Stalingrad Ironworks, formerly Karlova Huta Ironworks, p. 379

Monthly List of East European Accessions (EEAI) LC Vol. 8 no. 5
May 1959, Unclass.

APPROVED FOR RELEASE: 08/10/2001 CIA-RDP86-00513R000620120005-5"

"APPROVED FOR RELEASE: 08/10/2001 CIA-RDP86-00513R000620120005-5

KALIS, Kh.E. [Kalis, H.]; TSINOBER, A.B. [Cinobers, A.]; SHTERN, A.G. [Sterns, A.]; SHCHERBININ, E.V.

Flow of a conducting fluid past a circular cylinder in a transverse magnetic field. Mag. gidr. no.1:19-28 '65. (MIRA 18:5)

APPROVED FOR RELEASE: 08/10/2001 CIA-RDP86-00513R000620120005-5"

"APPROVED FOR RELEASE: 08/10/2001 CIA-RDP86-00513R000620120005-5

L 9883-66 EWT(m) DIAAP
ACC NR: AP5027378 SOURCE CODE: UR/0371/65/000/005/0026/0034

AUTHOR: Abrams, I.; Abrams, I. A.; Veveris, O.; Godkalns, A.; Kalis, H.; Veveris, O. E.; Godkalns, A. K.; Kalis, Kh. E.

ORG: IFANL

ORG: Institute of Physics, AN Latv. SSR (Institut fiziki AN Latv. SSR)

TITLE: Weakening gamma radiation from cylindrical sources by cylindrical shielding

SOURCE: AN LatSSR. Izvestiya. Seriya fizicheskikh i tekhicheskikh nauk, no. 5, 1965, 26-34

TOPIC TAGS: nuclear power, gamma radiation, gamma counter

ABSTRACT: With the development of nuclear energy, radiation protection became a major problem. A method was developed for counting the dosage rate of gamma radiation originating in a cylindrical source and shielded by a cylinder consisting of two layers of iron with a layer of lead in between. Counting was done by an electronic computer, with consideration of the multiple γ-ray scattering in the

1/2

APPROVED FOR RELEASE: 08/10/2001 CIA-RDP86-00513R000620120005-5"

"APPROVED FOR RELEASE: 08/10/2001 CIA-RDP86-00513R000620120005-5

L 9883-66
ACC NR: AP5027378

shielding material. The values R and h characterizing the dimensions of the cylindrical sources were selected, taking into consideration the major part of the existing sources of Co^{60}. Orig. art. has: 3 figures and 3 tables.

SUB CODE: 18/ SUBM DATE: 04Mar65/ NR REF SOV: 010/ OTHER: 000

2/2

APPROVED FOR RELEASE: 08/10/2001 CIA-RDP86-00513R000620120005-5"

"APPROVED FOR RELEASE: 08/10/2001 CIA-RDP86-00513R000620120005-5

KALIS, J.

KALIS, J. Methods of measuring turbulence in streams of water. p. 516.

Vol. 3, No. 6, 1955
SOVETSKA VEDA: VODNI STAVITELSTVI.
TECHNOLOGY
Praha, Czechoslovakia

So: East European Accessions, Vol. 5, No. 5, May 1956

APPROVED FOR RELEASE: 08/10/2001 CIA-RDP86-00513R000620120005-5"

"APPROVED FOR RELEASE: 08/10/2001 CIA-RDP86-00513R000620120005-5

KALIS, J.

"Flow of a liquid carring suspended particles." p.3

VODOHOSPODARSKY CASOPIS (Slovenska akademiavied) Bratislava, Czechoslovakia, Vol.7, no.1, 1959

Monthly List of East European Accessions (EEAI) LC, Vol. 8, No. 6, June 1959

Uncl.

APPROVED FOR RELEASE: 08/10/2001 CIA-RDP86-00513R000620120005-5"

"APPROVED FOR RELEASE: 08/10/2001 CIA-RDP86-00513R000620120005-5

KALIS, Jiri, ing., candidat des sciances techniques

Movement of liquids carrying suspended sediments. Vodoprivreda Jug 2 no.7/8:73-79 '59. (EEAI 10:1)

1. Institut des recherches hydrotechniques de la Haute Ecole Technique a Brno.
(Hydraulics) (Liquids)
(Sedimentation and deposition) (Rivers)

APPROVED FOR RELEASE: 08/10/2001 CIA-RDP86-00513R000620120005-5"

"APPROVED FOR RELEASE: 08/10/2001 CIA-RDP86-00513R000620120005-5

KALI[illegible] Jiri, inz. CSc.

Hydraulic losses in branches of the distribution piping of water power plants. Vodohosp cas 12 no. 1:48-77 '64.

1. Hydrotechnical Research Institute, Higher School of Technology, Brno.

APPROVED FOR RELEASE: 08/10/2001 CIA-RDP86-00513R000620120005-5"

"APPROVED FOR RELEASE: 08/10/2001 CIA-RDP86-00513R000620120005-5

KALI[illegible]

[illegible]lastic bags as a movable weir stemming construction. Inz stavby 13 no.4:143-149 Ap '65.

1. Hydrotechnical Research Institute of the Higher School of Technology, Brno.

APPROVED FOR RELEASE: 08/10/2001 CIA-RDP86-00513R000620120005-5"

"APPROVED FOR RELEASE: 08/10/2001 CIA-RDP86-00513R000620120005-5

ACC NR: AP6024851 SOURCE CODE: UR/0371/66/000/002/0032/0036

AUTHOR: Abrams, I. A.; Kalis, Kh.E. -- Kalis, H.; Polokis, L. L.; Taure, I. Ya.

ORG: Institute of Physics, AN LatSSR (Institut fiziki, Latv. SSR)

TITLE: Gamma radiation of a spherical source with a cylindrical channel on the axis of symmetry of sphere and cylinder

SOURCE: AN LatSSR. Izvestiya. Seriya fizicheskikh i tekhnicheskikh nauk, no. 2, 1966, 32-36

TOPIC TAGS: radiation intensity, radiation source, gamma radiation, nuclear radiation circuit source, radiation source design, nuclear reactor/IRT-2000 nuclear reactor

ABSTRACT: This paper describes a method for the prediction of dosage power and gamma radiation flow from a spherical radiator with a cylindrical passage carrying a flow of short life radioactive isotopes. The method was applied for a computer-supported calculation of the 15 cm diameter radiator belonging to the radiation circuit of the IRT-2000 nuclear reactor. The circuit or contour utilizes a eutectic alloy of Sn, In and Ga, with 99% of the gamma radiation coming from the In^{116m} isotpe with a half-life of 54 min. Comparison of the calculated results with measured experimental data agreed within 20%. The experimental radiation was obtained by photo-activation of the metastable level (335 Kev) of In^{115} by the reaction $In^{115}(\gamma, \gamma')In^{115m}$.

SUB CODE: 18, 20/ SUBM DATE: 29Jun65/ ORIG REF: 006

Card 1/1

APPROVED FOR RELEASE: 08/10/2001 CIA-RDP86-00513R000620120005-5"

"APPROVED FOR RELEASE: 08/10/2001 CIA-RDP86-00513R000620120005-5

KALIS,KH.E.;LIELAUSIS,O.A.;TSINOBER,A.B.;SHTERN,A.G.;SHCHERBININ,E.V. (Riga)

"Conductive fluid flow past bodies in a transverse magnetic field"

report presented at the 2nd All-Union Congress on Theoretical and Applied Mechanics, Moscow, 29 Jan - 5 Feb 64.

APPROVED FOR RELEASE: 08/10/2001 CIA-RDP86-00513R000620120005-5"

"APPROVED FOR RELEASE: 08/10/2001 CIA-RDP86-00513R000620120005-5

L 57473-65 EWT(1)/EWP(m)/EWA(d)/FCS(k)/EWA(1) Pd-1

ACCESSION NR: AP5014171 UR/0382/65/000/001/0018/0028

538.4:532.526

AUTHOR: Kalis, Kh. E.; Tsinober, A. B.; Shtern, A. G.; Shcherbinin, E. V.

[illegible] conducting fluid in a transverse magnetic field around a circular cylinder

SOURCE: Magnitnaya gidrodinamika, no. 1, 1965, 18-28

TOPIC TAGS: magnetohydrodynamics, plasma flow, Navier-Stokes equation, Reynolds number

ABSTRACT: The Navier-Stokes equations for the flow of a viscous conducting fluid past an insulated cylinder are solved for the case of a transverse magnetic field / with the Reynolds [illegible]

APPROVED FOR RELEASE: 08/10/2001 CIA-RDP86-00513R000620120005-5"

"APPROVED FOR RELEASE: 08/10/2001 CIA-RDP86-00513R000620120005-5

Card 1/2

L 57473-65

ACCESSION NR: AP5014171

avoids oscillation of the stream function as in the work of H. Kawaguti (Journ. Phys. Soc. Japan, 1953, 8, 6). Orig. art. has 11 formulas, 9 figures

APPROVED FOR RELEASE: 08/10/2001 CIA-RDP86-00513R000620120005-5"

"APPROVED FOR RELEASE: 08/10/2001 CIA-RDP86-00513R000620120005-5

L 9883-66 EWT(m) DIAAP
ACC NR: AP5027378 SOURCE CODE: UR/0371/65/000/005/0026/0034

AUTHOR: Abrams, I.; Abrams, I. A.; Veveris, O.; Godkalns, A.; Kalis, H.; Veveris, O. E.; Godkalns, A. K.; Kalis, Kh. E.

ORG: IFANL

ORG: Institute of Physics, AN Latv. SSR (Institut fiziki AN Latv. SSR)

TITLE: Weakening gamma radiation from cylindrical sources by cylindrical shielding

SOURCE: AN LatSSR. Izvestiya. Seriya fizicheskikh i tekhicheskikh nauk, no. 5, 1965, 26-34

TOPIC TAGS: nuclear power, gamma radiation, gamma counter

ABSTRACT: With the development of nuclear energy, radiation protection became a major problem. A method was developed for counting the dosage rate of gamma radiation originating in a cylindrical source and shielded by a cylinder consisting of two layers of iron with a layer of lead in between. Counting was done by an electronic computer, with consideration of the multiple γ-ray scattering in the

APPROVED FOR RELEASE: 08/10/2001 CIA-RDP86-00513R000620120005-5"

"APPROVED FOR RELEASE: 08/10/2001 CIA-RDP86-00513R000620120005-5

L 9883-66
ACC NR: AP5027378

shielding material. The values R and h characterizing the dimensions of the cylindrical sources were selected, taking into consideration the major part of the existing sources of Co^{60}. Orig. art. has: 3 figures and 3 tables.

SUB CODE: /8/ SUBM DATE: 04Mar65/ NR REF SOV: 010/ OTHER: 000

2/2

APPROVED FOR RELEASE: 08/10/2001 CIA-RDP86-00513R000620120005-5"

"APPROVED FOR RELEASE: 08/10/2001 CIA-RDP86-00513R000620120005-5

KAVERZNEVA, Ye.D.; KALIS, V.E.

Studying the stability of some N-glycosides, of amino acids and peptides in aqueous solutions [with summary in English]. Biokhimiia 23 no.1:92-100 Ja-F '58. (MIRA 11:3)

1. Institut organicheskoy khimii im. N.D.Zelinskogo AN SSSR, Moskva.
(GLYCOSIDES,
N-glycosides, stability in aqueous solutions (Rus)
(AMINO ACIDS,
stability in aqueous solutions (Rus)
(PEPTIDES,
same)

APPROVED FOR RELEASE: 08/10/2001 CIA-RDP86-00513R000620120005-5"

"APPROVED FOR RELEASE: 08/10/2001 CIA-RDP86-00513R000620120005-5

KALIS, V.M.; KAVERZNEVA, Ye.D.

Stability of some peptide N-glucosides and proline N-glucoside in aqueous solutions. Biokhimiia 24 no.6:1026-1032 N-D '59. (MIRA 13:5)

1. Institute of Organic Chemistry, Academy of Sciences of the U.S.S.R., Moscow.
(PEPTIDES chem.)
(PROLINE chem.)

APPROVED FOR RELEASE: 08/10/2001 CIA-RDP86-00513R000620120005-5"

"APPROVED FOR RELEASE: 08/10/2001 CIA-RDP86-00513R000620120005-5

KALIS, V. E (Riga); KAVERZNEVA, Ye. (Riga)

Constants of equilibrium of reversible reaction of hydrolysis of N-glucosides of amino acids and peptides. Vestis Latv ak no.1:107-110 '60. (EEAI 9:11)

1. Akademiya nauk Latviyskoy SSR, Institut organicheskogo sinteza.
(Hydrolysis) (Glycosides) (Amino acids) (Peptides)

APPROVED FOR RELEASE: 08/10/2001 CIA-RDP86-00513R000620120005-5"

"APPROVED FOR RELEASE: 08/10/2001 CIA-RDP86-00513R000620120005-5

KALIS, V. E.

Cand Chem Sci - (diss) "Study of the stability of several N-glucosides of amino-acids and peptides in aqueous solutions." Moscow, 1961. 19 pp with diagrams; (Moscow Order of Lenin and Order of Labor Red Banner State Univ imeni M. V. Lomonosov); 300 copies; price not given; (KL, 6-61 sup, 198)

APPROVED FOR RELEASE: 08/10/2001 CIA-RDP86-00513R000620120005-5"

"APPROVED FOR RELEASE: 08/10/2001 CIA-RDP86-00513R000620120005-5

BENENSON, I.S.; KALISH, F.M.

Transitory cardiac fibrillation. Med. zhur. Uzb. no.10:47-49 '61. (MIRA 14:10)

1. Iz 1-go terapevticheskogo otdeleniya (nauchnyy rukovoditel' - prof. O.N.Pavlova) Tashkentskoy klinicheskoy bol'nitsy neotlozhnoy pomoshchi.

(ARRHYTHMIA)

APPROVED FOR RELEASE: 08/10/2001 CIA-RDP86-00513R000620120005-5"

"APPROVED FOR RELEASE: 08/10/2001 CIA-RDP86-00513R000620120005-5

MICHKIN, I.A.; KALISH, G.G., doktor tekhn. nauk, prof., red.;
KOVAL'SKAYA, I.F., tekhn. red.

[Vortex nozzles] Vikhrevye forsunki. Moskva, TSentr. in-t nauchno-tekhn. informatsii mashinostroeniia, 1961. 61 p. (MIRA 15:7)

(Nozzles)

APPROVED FOR RELEASE: 08/10/2001 CIA-RDP86-00513R000620120005-5"

"APPROVED FOR RELEASE: 08/10/2001 CIA-RDP86-00513R000620120005-5

AYZERMAN, M.A.; KALISH, G.G., prof., doktor tekhn.nauk, laureat Stalinskoy premii, retsenzent; FEL'DBAUM, A.A., kand.tekhn.nauk, retsenzent; BLOKH, Z.Sh., prof., doktor tekhn.nauk, red.; SOKOLOV, T.F., tekhn.red.

[Introduction in the dynamics of the automatic control of engines] Vvedenie v dinamiku avtomaticheskogo regulirovaniia dvigatelei. Moskva, Gos.nauchno-tekhn.izd-vo mashinostroit.lit-ry, 1950. 150 p. (MIRA 14:4)

(Automatic control) (Engines)

APPROVED FOR RELEASE: 08/10/2001 CIA-RDP86-00513R000620120005-5"

"APPROVED FOR RELEASE: 08/10/2001 CIA-RDP86-00513R000620120005-5

GORELIK,A.M., inzhener; OSIPYAN,A.V., kandidat tekhnicheskikh nauk; otvetstvennyy redaktor; ZIL'BERBERG,Ya.G., inzhener; BRILING,N.R., doktor tekhnicheskikh nauk, professor; KALISH,G.G., doktor tekhnicheskikh nauk,professor; MEZIN,I.S., doktor tekhnicheskikh nauk; PEVZNER,Ya.M., doktor tekhnicheskikh nauk; KHRUSHCHEV,M.M., doktor tekhnicheskikh nauk, professor; BRYZGOV,N.N., kandidat tekhnicheskikh nauk; KOZLOVSKIY, I.S.; kandidat tekhnicheskikh nauk; LYTKIN,I.I., kandidat tekhnicheskikh nauk; RAMAYYA,K.S., kandidat tekhnicheskikh nauk; BUTYLKIN,A.G., tekhnicheskiy redaktor; MATVEYEVA,Ye.N.; tekhnicheskiy redaktor.

The effect of vertical forces on automobile wheels. Trudy NAMI no.65:1 '52. (MLRA 8:11)

1. Direktor NAMI (for Osipyan)
(Automobiles--Wheels)

APPROVED FOR RELEASE: 08/10/2001 CIA-RDP86-00513R000620120005-5"

"APPROVED FOR RELEASE: 08/10/2001 CIA-RDP86-00513R000620120005-5

KALISH, G.G., doktor tekhnicheskikh nauk.

Automobile engines. Avt.trakt.pron.no.5:6-7 My '53. (MLRA 6:5)

1. Nauchnyy avtomotornyy institut.
(Automobiles--Motors) (Chistozvonov, S.B.)

APPROVED FOR RELEASE: 08/10/2001 CIA-RDP86-00513R000620120005-5"

"APPROVED FOR RELEASE: 08/10/2001 CIA-RDP86-00513R000620120005-5

KALISH, G.G.; POLYAKOV, P.A.

Effect of the periodic component of the moment of movement in the operation of a piston engine. Trudy NAMI no.70:4-16 '53. (MLRA 8:3)
(Engines—Vibration)

APPROVED FOR RELEASE: 08/10/2001 CIA-RDP86-00513R000620120005-5"

"APPROVED FOR RELEASE: 08/10/2001 CIA-RDP86-00513R000620120005-5

MINKIN,M.L., kandidat tekhnicheskikh nauk; TRAKTOVENKO,I.A., kandidat tekhnicheskikh nauk; OSIPYAN,A.V., kandidat tekhnicheskikh nauk, otvetstvennyy redaktor; ZIL'BERBERG,Ya.G., inzhener, sekretar' BRILING,N.R., doktor tekhnicheskikh nauk, KALISH,G.G., professor, doktor tekhnicheskikh nauk; PEVZNER,Ya.M., doktor tekhnicheskikh nauk; RAMAYYA,K.S., doktor tekhnicheskikh nauk; KHRUSHCHEV,M.M., professor, doktor tekhnicheskikh nauk; KOZLOVSKIY,I.S., kandidat tekhnicheskikh nauk; MATVEYEVA,Ye.N., tekhnicheskiy redaktor.

[An investigation of Soviet automobile radiators] Issledovanie otechestvennykh avtomobil'nykh radiatorov. Moskva, Gos. nauchno-tekhn. izd-vo mashinostroit. lit-ry, 1954. 43 p. (Moscow. Gosudarstvennyi nauchno-issledovatel'skii avtomobil'nyi i avtomotornyi institut. [Trudy], no.74) (MLRA 8:9)

(Automobiles--Radiators)

APPROVED FOR RELEASE: 08/10/2001 CIA-RDP86-00513R000620120005-5"

"APPROVED FOR RELEASE: 08/10/2001 CIA-RDP86-00513R000620120005-5

KALISH, G.G.

LAPIDUS, V.I., kandidat tekhnicheskikh nauk; OSIPYAN, A.V., kandidat tekhnicheskikh nauk, otvetstvennyy redaktor; ZIL'BERBERG, Ya.G., inzhener, sekretar'; ERILING, N.R., doktor tekhnicheskikh nauk, professor; PEVZNER, Ya.M., doktor tekhnicheskikh nauk, professor; KHRUSHCHEV, M.M., doktor tekhnicheskikh nauk, professor; KALISH, G.G., doktor tekhnicheskikh nauk, professor; RAMAYYA, I.S., doktor tekhnicheskikh nauk; KOZLOVSKIY, I.S., kandidat tekhnicheskikh nauk; UVAROVA, A.F., tekhnicheskiy redaktor.

Experimental research on fluid flow in hydraulic torque converters. [Trudy] NAMI no.73:1-22 '54. (MIRA 8:2)

1. Direktor Nauchnogo avtomotornogo instituta (for Osipyan).
(Oil hydraulic machinery)(Automobiles--Transmission devices)

APPROVED FOR RELEASE: 08/10/2001 CIA-RDP86-00513R000620120005-5"

"APPROVED FOR RELEASE: 08/10/2001 CIA-RDP86-00513R000620120005-5

KALISH, G.G.

KULIKOV, N.K., kandidat tekhnicheskikh nauk; OSIPYAN,A.V., kandidat tekhnicheskikh nauk, redaktor; KOZLOVSKIY,I.S., kandidat tekhnicheskikh nauk, redaktor; BRILING,N.R., doktor tekhnicheskikh nauk, professor, redaktor; KALISH,G.G., doktor tekhnicheskikh nauk,professor, redaktor; PEVZNER,Ya.M., doktor tekhnicheskikh nauk, professor, redaktor; KHRUSHCHEV,M.M., doktor tekhnicheskikh nauk, professor redaktor; RAMAYYA,K.S., doktor tekhnicheskikh nauk, redaktor; LIPGART,A.A., redaktor; PRYADILOV, V.I., kandidat tekhnicheskikh nauk, redaktor; ROZANOV,V.G., kandidat tekhnicheskikh nauk, redaktor; CHISTOZVONOV,S.B., inzhener, redaktor; ZIL'BERBERG,Ya.G., inzhener, redaktor; UVAROVA,A.F., tekhnicheskiy redaktor.

Wedged freewheeling clutches. Trudy NAMI no.75:3-67 '54. (MLRA 8:7)

1. Konstruktor Nauchno-issledovatel'skogo avtomotornogo instituta (for Lipgart)

(Clutches (Machinery))

APPROVED FOR RELEASE: 08/10/2001 CIA-RDP86-00513R000620120005-5"

"APPROVED FOR RELEASE: 08/10/2001 CIA-RDP86-00513R000620120005-5

LEVENSTERN, O.L., kandidat tekhnicheskikh nauk; KRESTOVNIKOV, G.A., inzhener; OSIPYAN, A.V., kandidat tekhnicheskikh nauk, redaktor; KOZLOVSKIY, I.S., kandidat tekhnicheskikh nauk, redaktor; ZIL'BERBERG, Ya.G., inzhener, redaktor; BRILING, N.R., professor, dektor tekhnicheskikh nauk, redaktor; KALISH, G.G., dektor tekhnicheskikh nauk, professor, redaktor; RAMAYYA, K.S., dektor tekhnicheskikh nauk, redaktor; LIPGART, A.A., professor, redaktor; PRYADILOV, V.I., kandidat tekhnicheskikh nauk, redaktor; ROZANOV, V.G., kandidat tekhnicheskikh nauk, redaktor; CHISTOZVONOV, S.B., inzhener, redaktor; SHTEYNGART, M.D., redaktor; UVAROVA, A.F., tekhnicheskiy redaktor.

[Heating of brake linings in passenger cars] Nagrev termoznykh nakladok legkovykh avtomobilei. Moskva, Ges.nauchno-tekh.izd-ve mashinostroit. lit-ry, 1955. 35 p. (Moscow. Gosudarstvennyi nauchno-issledovatel'skii avtomobil'nyi i avtomotornyi institut. Trudy, no.78). (MIRA 9:7)

1.Direktor Nauchno-issledovatel'skogo avtomotornogo instituta (for Osipyan).2.Zamestitel' direktora Nauchno-issledovatel'skogo avtomotornogo instituta (for Kozlovskiy).3.Chlen-korrespondent AN SSSR (for Briling). (Automobiles--Brakes)

APPROVED FOR RELEASE: 08/10/2001 CIA-RDP86-00513R000620120005-5"

"APPROVED FOR RELEASE: 08/10/2001 CIA-RDP86-00513R000620120005-5

KALISH, G.G.

KULIKOV, N.K., dokter tekhnicheskikh nauk; OSIPYAN, A.V., kandidat tekhnicheskikh nauk, redaktor; KOZLOVSKIY, I.S., kandidat tekhnicheskikh nauk, redaktor; ZIL'BERBERG, Ya.G., inzhener, redaktor; BRILING, N.R., dokter tekhnicheskikh nauk, professor, redaktor; KALISH, G.G., doktor tekhnicheskikh nauk, professor, redaktor; PEVZNER, Ya.M., doktor tekhnicheskikh nauk, professor, redaktor; KRUSHCHEV, M.M., doktor tekhnicheskikh nauk, professor, redaktor; RAMAYYA, K.S., doktor tekhnicheskikh nauk, professor, redaktor; LIPGART, A.A., professor, redaktor; PRYADILOV, V.I., kandidat tekhnicheskikh nauk, redaktor; ROZANOV, V.G., kandidat tekhnicheskikh nauk, redaktor; CHISTOZVONOV, S.B., inzhener, redaktor; YEGORKINA, L.I., redaktor; UVAROVA, A.F., tekhnicheskiy redaktor; BROKSH, V.V., inzhener.

[Performance of automobile wheels] Rabota avtomobil'nogo kolesa. (Moscow, Gosudarstvennyi nauchno-issledovatel'skii avtomobil'nyi i avtomotornyi institut. [Trudy] no.77) 1955 36 p. (MLRA 9:4)

1. Chlen-korrespondent AN SSSR (for Briling).
(Automobiles--Wheels)

APPROVED FOR RELEASE: 08/10/2001 CIA-RDP86-00513R000620120005-5"

"APPROVED FOR RELEASE: 08/10/2001 CIA-RDP86-00513R000620120005-5

RUDNITSKIY, N.M., kandidat tekhnicheskikh nauk; OSIPYAN, A.V., kandidat tekhnicheskikh nauk, redaktor; KOZLOVSKIY, I.S., kandidat tekhnicheskikh nauk, redaktor; ZIL'BERBERG, Ya.G., inzhener, redaktor; BRILING, N.R., doktor tekhnicheskikh nauk, professor, redaktor; KALISH, G.G., doktor tekhnicheskikh nauk, professor, redaktor; PEVZNER, Ya.M., doktor tekhnicheskikh nauk, professor, redaktor; KRUSHCHEV, M.M., doktor tekhnicheskikh nauk, professor, redaktor; RAMAYYA, K.S., doktor tekhnicheskikh nauk, redaktor; LIPGART, A.A., professor, redaktor; PRYADILOV, V.I., kandidat tekhnicheskikh nauk, redaktor; ROZANOV, V.G., kandidat tekhnicheskikh nauk, redaktor; CHISTOZVONOV, S.B., inzhener; BROKSH, V.V., inzhener, redaktor; BAUMAN, I.M., redaktor; UVAROVA, A.F., tekhnicheskiy redaktor.

[Endurance of materials for automobile engine sliding friction bearings] Vynoslivost' materialov dlia podshipnikov skol'zheniia automobil'nykh dvigatelei. (Moscow. Gosudarstvennyi nauchno-issledovatel'skii i avtomobil'nyi institut. [Trudy], no.76) 1955 54 p. (MIRA 9:4)

1. Direktor Nauchno-issledovatel'skogo avtomotornogo instituta (for Osipyan). 2. Chlen-korrespondent AN SSSR (for Briling).
(Bearings (Machinery)) (Automobiles--Engines)

APPROVED FOR RELEASE: 08/10/2001 CIA-RDP86-00513R000620120005-5"

"APPROVED FOR RELEASE: 08/10/2001 CIA-RDP86-00513R000620120005-5

KALISCH, G. G.

Distr: 4E2b

2443. Kalisch, G. G., A quantitative evaluation by the Vyshnegradsky diagram of the convergence of the process and the resonance phenomena in the automatic control of internal combustion [illegible]

APPROVED FOR RELEASE: 08/10/2001 CIA-RDP86-00513R000620120005-5"

"APPROVED FOR RELEASE: 08/10/2001 CIA-RDP86-00513R000620120005-5

RAMAYYA, K.S., doktor tekhnicheskikh nauk; SIL'S, R.Kh., inzhener; BEN-YAKIR, R.D., inzhener; KOZLOVSKIY, I.S., kandidat tekhnicheskikh nauk, zamestitel' otvetsvtennogo redaktora; ZIL'BERBERG, Ya.G., inzhener, sekretar'; BRILING, N.R., professor, doktor tekhnicheskih nauk; KALISH, G.G., professor, doktor tekhnicheskikh nauk; PEVZNER, Ya.M., professor, doktor tekhnicheskikh nauk; KHRUSHCHEV, M.M., professor, doktor tekhnicheskikh nauk; LIPGART, A.A.; professor; PRYADILOV, V.I., kandidat tekhnicheskikh nauk; ROZANOV, V.S., kandidat tekhnicheskikh nauk; CHISTOZVONOV, S.B., inzhener; BROKSH, V.V., zavedyuyshchiy redaktsiyey, inzhener; UVAROVA, A.F., tekhnicheskiy redaktor; OSIPYAN, A.F., kandidat tekhnicheskikh nauk, otvetstvennyy redaktor.

[Method of determining the potential corrosion properties of lubricants] Metod opredeleniia potentsial'noi korrozionnosti masel. Moskva, Gos.nauchno-tekhn.izd-vo mashinostroit.lit-ry.1956 49 p. (Moscow. Gosudarstvennyi nauchno-issledovatel'skii avtomobil'nyi i avtomotornyi institut. [Trudy], no. 80) (MLRA 10:1)

1. Direktor Nauchno-issledovatel'skogo avtomotornogo instituta (for Osipyan). 2.Zamestitel' direktora Nauchno-issledovatel'skogo avtomotornogo instituta po nauchnoy rabote (for Kozlovskiy).3.Chlen-korrespondent Akademii nauk SSSR (for Briling).
(Lubrication and lubricants) (Corrosion and anticorrosives)

APPROVED FOR RELEASE: 08/10/2001 CIA-RDP86-00513R000620120005-5

"APPROVED FOR RELEASE: 08/10/2001 CIA-RDP86-00513R000620120005-5

KALISH, G.G.

CHAPKEVICH, V.A., kandidat tekhnicheskikh nauk; OSIPYAN, A.V., kandidat tekhnicheskikh nauk, redaktor; KOZLOVSKIYI.S., kandidat tekhnicheskikh nauk, redaktor; ZIL'BERBERG, Ya.G., inzhener, redaktor; BRILING, N.R., professor, doktor tekhnicheskikh nauk, redaktor; ~~KALISH, G.G.,~~ professor, doktor tekhnicheskikh nauk, redaktor; PEVZNER, Ya.M. professor, doktor tekhnicheskikh nauk, redaktor; KHRUSHCHOV, M.M., doktor tekhnicheskikh nauk, professor, redaktor; RAMAYYA, K.S., doktor tekhnicheskikh nauk, redaktor; LIPGART, A A., professor, redaktor; PRYADILOV, V.I., kandidat tekhnicheskikh nauk, redaktor; ROZANOV, V.G., kandidat tekhnicheskikh nauk; redaktor; CHISTOZVONOV, S.B., inzhener, redaktor; UVAROVA, A.F., tekhnicheskiy redaktor.

[Investigation of the operation of the IaAZ engine] Issledovanie rabochego protsessa dvigatelia IaAZ. Moskva, Gos.nauchno-tekhn. izd-vo mashino-stroit.lit-ry, 1956. 41 p. (Moscow. Gosudarstvennyi nauchno-issledovatel'skii avtomobil'nyi i avtemotornyi institut. [Trudy], no.79) (MIRA 10:3)

1. Direktor Nauchno-issledovatel'skogo avtomobil'nogo insituta(for Osipyan) 2. Zamestitel' direktora Nauchno-issledovatel'skogo avtomobil'nogo instituta po nauchnoy rabote (for Kozlovskiy) 3.Chlen-korrespondent AN SSSR (for Briling).
(Automobiles--Engines)

APPROVED FOR RELEASE: 08/10/2001 CIA-RDP86-00513R000620120005-5"

"APPROVED FOR RELEASE: 08/10/2001 CIA-RDP86-00513R000620120005-5

KALISH G.G.

KHANIN, N.S.; kandidat tekhnicheskikh nauk; KALISH, G.G., doktor tekhnicheskikh nauk; ANDRONOVA, T.B., kandidat tekhnicheskikh nauk; KUKHAREV, M.N., kandidat tekhnicheskikh nauk; GERSHMAN, I.I.; CHAPKEVICH, V.A., kandidat tekhnicheskikh nauk; YERMOLAYEV, P.S.

Review of the book "Internal combustion engines," Edited by A.S. Orlin. N.S. Khanin and others. Avt. i trakt. prom. no.7: 45-46 Jl '56. (MLRA 9:10)

1. Nauchno-issledovatel'skiy avtomotornyy institut.
(Gas and oil engines) (Orlin, A.S.)

APPROVED FOR RELEASE: 08/10/2001 CIA-RDP86-00513R000620120005-5"

"APPROVED FOR RELEASE: 08/10/2001 CIA-RDP86-00513R000620120005-5

KALISH, G. G.

TRAKTOVENKO, I.A., kand. tekhn. nauk; VEDENYAPIN, G.A., otv. red.; KOZLOVSKIY, I.S., kand. tekhn. nauk. red.; ZIL'BERBERG, Ya.G. inzh. zamestitel' otv. red.; BRILING, N.R., doktor tekhn. nauk, prof., red.; KALISH, G.G., doktor tekhn. nauk, prof., red.; PEVZNER, Ya.M., doktor tekhn. nauk, prof., red.; KHRUSHCHEV, M.M., doktor tekhn. nauk, prof., red.; RAMAYYA, K.S., doktor tekhn. nauk, red.; LIPGART, A.A., prof., red.; PRYADILOV, V.I., kand. tekhn. nauk, red.; ROZANOV, V.G., kand. tekhn. nauk, red.; CHISTOZVONOV, S.B., inzh., red.; SHIKIN, S.T., tekhn. red.

[Investigating the effect of the cetane number of diesel fuels on the performance of engines] Issledovanie vliianiia tsetanovogo chisla topliva no rabotu dvigatelia. Moskva, Gos. nauchno-tekhn. izd-vo mashinostroitel'noi lit-ry, 1957. 30 p. (Moscow. Gosudarstvennyi nauchno-issledovatel'skii avtomobil'nyi i avtomotornyi institut. [Trudy], no.83). (MIRA 10:12)

1. Direktor Gosudarstvennogo soyuznogo ordena Trudovogo Krasnogo Znameni nauchno-issledovatel'skogo avtomobil'nogo i avtomotornogo instituta (for Vedenyapin). 2. Zamestitel' direktora po nauchnoy rabote Gosudarstvennogo soyuznogo ordena Trudovogo Krasnogo Znameni nauchno-issledovatel'skogo avtomobil'nogo i avtomotornogo instituta (for Kozlovskiy). 3. Chlen-korrespondent AN SSSR (for Briling).
(Diesel fuel) (Diesel engine)

APPROVED FOR RELEASE: 08/10/2001 CIA-RDP86-00513R000620120005-5"

"APPROVED FOR RELEASE: 08/10/2001 CIA-RDP86-00513R000620120005-5

SHKOL'NIKOV, E.M., kand.tekhn.nauk; LEVITAN, M.M., inzh.; OSIPYAN, A.V., kand.tekhn.nauk, red.; KOZLOVSKIY, I.S., kand.tekhn.nauk, zamestitel' otvetstvennogo red.; BRILING, N.R., doktor tekhn.nauk, prof., red.; KALISH, G.G., doktor tekhn.nauk, prof.; LIPGART, A.A., prof.,red.; PEVZNER, Ya.M., doktor tekhn.nauk, prof., red.; PRYADILOV, V.I., kand. tekhn.nauk, red.; ROZANOV, V.G., kand.tekhn.nauk, red.; KRUSHCHEV,M.M., doktor tekhn.nauk, prof., red.; CHISTOZVONOV, S.B., inzh., red.; ZIL'BERBERG, Ya.G., inzh., red.; YEGORKINA, L.I., red.izd-va; UVAROVA, A.F., tekhn.red.

[Using chromium-silicon alloys in manufacturing automobile engine sleeves] Khromokremnistyi splav dlia gil'z avtomobil'nykh dvigatelei. Moskva, Gos.nauchno-tekhn.izd-vo mashinostroit.lit-ry, 1957. 78 p. (Moscow. Gosudarstvennyi nauchno-issledovatel'skii avtomobil'nyi i avtomotornyi institut. Trudy no.81)

1. Direktor Gosudarstvennogo soyuznogo ordena Trudovogo Krasnogo Znameni nauchno-issledovatel'skogo avtomobil'nogo i avtomotornogo instituta (for Osipyan). 2. Zamestitel' direktora Gosudarstvennogo soyuznogo ordena Trudovogo Krasnogo Znameni nauchno-issledovatel'skogo avtomobil'nogo i avtomotornogo instituta (for Kozlovskiy). 3. Chlen-korrespondent AN SSSR (for Briling).
(Chromium-silicon alloys) (Automobiles--Engines--Cylinders)

APPROVED FOR RELEASE: 08/10/2001 CIA-RDP86-00513R000620120005-5"

"APPROVED FOR RELEASE: 08/10/2001 CIA-RDP86-00513R000620120005-5

KALISH, GERMAN GEORGIYEVICH

PHASE I BOOK EXPLOITATION 326

Orlin, Andrey Sergeyevich; Vyrubov, Dmitriy Nikolayevich, Kalish, German Georgiyevich; Kruglov, Mikhail Georgiyevich; Leonov, Oleg Borisovich, Lebedev, Sergey Yevgen'yevich; Librovich, Bronislav Genrikhovich; Chursin, Mikhail Mikhailovich

Dvigateli vnutrennego sgoraniya. t.1: Rabochiye protsessy v dvigatelyakh i ikh agregatakh (Internal Combustion Engines. v. 1: Working Processes in Engines and Their Units) 2d ed., rev. and enl. Moscow, Mashgiz, 1957. 396 p.

Ed.: (title page): Orlin, A.S , Professor; Reviewer: Mel'kumov, T.M.; Ed. (inside book): Yegorkina, L.I., Engineer; Tech. Ed.: Tikhanov, A.Ya.; Managing Ed. for Literature on Automobile, Tractor and Agricultural Machine-building (Mashgiz): Bauman, I.M.

PURPOSE: This book is written as a textbook for students of institutions of higher learning specializing in internal combustion engines, automobiles, tractors, marine engines and locomotives.

Card 1/11

APPROVED FOR RELEASE: 08/10/2001 CIA-RDP86-00513R000620120005-5"

"APPROVED FOR RELEASE: 08/10/2001 CIA-RDP86-00513R000620120005-5

Kruglov, M.G. (Section 12), Leonov, O.B. (Section 13) and Chursin, M.M. (Sections 8-11); Chapter VI by Kruglov, M.G. and Leonov, O.B.; Chapters VIII and IX by Kruglov, M.G.; Chapter X by Leonov, O.B.; Chapters XI, XII and XIII by Kalish, G.G. In the preparation of Chapters II, III and V the studies of Lebedev, S. Ye. and Librovich, B.G. were used, and in the preparation of Chapter IX the work of Kalish, G.G. There are 31 references: 28 are Soviet, 2 English and 1 German.

TABLE OF CONTENTS:

Preface 3

Basic conventional symbols 5

Ch. I. Brief History of Internal Combustion Engine Development 7

Ch. II. Thermodynamic Cycles of Internal Combustion Engines 17

APPROVED FOR RELEASE: 08/10/2001 CIA-RDP86-00513R000620120005-5"

"APPROVED FOR RELEASE: 08/10/2001 CIA-RDP86-00513R000620120005-5

Internal Combustion Engines, v. 1, Working Processes (Cont.) 326

Ch. V. Real Cycle of Internal Combustion Engines 68

1. General considerations 68
2. Charging process 69
3. Compression process 86
4. Change in the characteristics of the fuel in combustion 91
5. Combustion thermodynamics 106
6. Forces of expansion 111
7. Characteristic parameters of a cycle 115
8. Factors influencing indicated characteristics of spark ignition engines 124
9. Factors influencing indicated characteristics of compression ignition engines 129
10. Parameters characterizing engine operation 135

Card 5/11

APPROVED FOR RELEASE: 08/10/2001 CIA-RDP86-00513R000620120005-5"

"APPROVED FOR RELEASE: 08/10/2001 CIA-RDP86-00513R000620120005-5

Internal Combustion Engines, v. 1, Working Processes (Cont.)326

5. Analysis of a free outlet process 189
6. Analysis of scavenging-intake and forced exhaust in two-stroke engines 198
7. Analysis of the exhaust in four-stroke engines 201
8. Parameters of the exhaust-supercharging 202
9. Available time intervals of distribution schemes 207
10. Sequence of the conduct of analysis 209
11. Changes in parameters of cylinders according to the angle of crankshaft rotation 214
12. Experimental determination of the quality of the cylinder clearing and filling processes 219

Ch. VIII. Supercharging of Engines 229

Card 7/11

APPROVED FOR RELEASE: 08/10/2001 CIA-RDP86-00513R000620120005-5"

"APPROVED FOR RELEASE: 08/10/2001 CIA-RDP86-00513R000620120005-5

Internal Combustion Engines, v. 1, Working Processes (Cont.) 326

1. General considerations 229
2. Systems of supercharging 232
3. Limits of the increase of engine power by supercharging 241
4. Supercharged engines 246

Ch. IX. Fuel Supply in Engines With Forced Ignition 257

1. General considerations 257
2. Simple suction-carburetor 258
3. Simple suction-carburetor characteristics 259
4. Ideal carburetor characteristics 265
5. Main controlling systems 267
6. Auxiliary devices of a carburetor 275
7. Plans of some carburetors 282

Card 8/11

APPROVED FOR RELEASE: 08/10/2001 CIA-RDP86-00513R000620120005-5"

"APPROVED FOR RELEASE: 08/10/2001 CIA-RDP86-00513R000620120005-5

Internal Combustion Engines, v. 1, Working Processes (Cont.) 326

5. Inertia phenomena in an injection process 326

6. Fuel atomizing during injection and the formation of a spray of the atomized fuel 332

7. Mixture formation in compression ignition engines 339

Ch. XII. Working Conditions and Characteristics of Internal Combustion Engines 359

1. Working conditions of internal combustion engines of various purposes 359

2. Speed characteristic of an engine 362

3. Partial speed characteristics of an engine 367

4. Stability of the operating conditions 372

5. Other characteristics of an engine 375

Ch. XIII. Application of Regulators of Speed Operating Conditions to Internal Combustion Engines 379

Card 10/11

APPROVED FOR RELEASE: 08/10/2001 CIA-RDP86-00513R000620120005-5"

"APPROVED FOR RELEASE: 08/10/2001 CIA-RDP86-00513R000620120005-5

POSPELOV, Dmitriy Razumnikovich; KALISH, G.G., doktor tekhn. nauk, retsenzent; KALABIN, V.P., doktor tekhn. nauk, red.; YEGORKINA, L.I., red. izd-va; MODEL', B.I., tekhn. red.

[Air-cooled interval combustion engines] Dvigateli vnutrennego sgoraniia s vozdushnym okhlazhdeniem. Moskva, Gos. nauchno-tekhn. izd-vo mashinostroit. lit-ry, 1961. 555 p. (MIRA 14:8)
(Gas and oil engines—Cooling)

APPROVED FOR RELEASE: 08/10/2001 CIA-RDP86-00513R000620120005-5"

"APPROVED FOR RELEASE: 08/10/2001 CIA-RDP86-00513R000620120005-5

PAVLOV, Boris Vasil'yevich, kand. tekhn. nauk; KALISH, G.G., doktor tekhn. nauk, retsenzent; MODEL', B.I., tekhn. red.

[Use of electronic calculating machines for studying the fuel systems of diesel engines] Ispol'zovanie elektronnykh vychislitel'nykh mashin dlia issledovaniia toplivnykh sistem dizelei. Moskva, Mashgiz, 1962. 99 p. (MIRA 15:2)
(Diesel engines—Fuel systems)
(Electronic calculating machines)

APPROVED FOR RELEASE: 08/10/2001 CIA-RDP86-00513R000620120005-5"

"APPROVED FOR RELEASE: 08/10/2001 CIA-RDP86-00513R000620120005-5

ORLIN, A.S., prof.; VYRUBOV, D.N.; ALEKSEYEV, V.P.; KALISH, G.G.; KOSTYGOV, N.I.; KRUGLOV, M.G.; KRUTOV, V.I.; MIZERNYUK, G.N.; ROGANOV, S.G.; STEPANOV, Yu.A., prof., retsenzent; YEGORKINA, L.I., red. izd-va; SOKOLOVA, T.F., tekhn. red.

[Internal combustion engines]Dvigateli vnutrennego sgoraniia. Pod red.A.S.Orlina. Moskva, Mashgiz. Vol.3. [Systems, regulation, automatic control]Sistemy. Regulirovanie. Avtomatizatsiia. 1962. 307 p. (MIRA 16:1)
(Gas and oil engines) (Automatic control)

APPROVED FOR RELEASE: 08/10/2001 CIA-RDP86-00513R000620120005-5"

"APPROVED FOR RELEASE: 08/10/2001 CIA-RDP86-00513R000620120005-5

ANDREYEV, B.V.; ARTEM'YEV, S.P.; ARKHANGEL'SKIY, V.M; AFANAS'YEV, L.L.; BABKOV, V.F.; BRONSHTEYN, L.A.; BURKOV, M.S.; BURYANOV, V.A.; VARSHAVSKIY, I.L.; VELIKANOV, D.P.; VOINOV, A.N.; VIRUBOV, D.N.; DORMIDONTOV, A.V.; D'YACHKOV, A.K.; YEFREMOV, V.V.; ZHABIN, V.M.; ZELENKOV, G.I.; KALABUKHOV, F.V.; KALISH, G.G.; KRAMARENKO, G.V.; KRASIKOV, S.M.; LAKHTIN, Yu.M.; MIKULIN, A.A.; ORLIN, A.S.; OSTROVSKIY, N.B.; OSTROVTSOV, A.N.; RUBETS, D.A.; STEPANOV, Yu.A.; STECHKIN, B.S.; KHACHATUROV, A.A.; KHOVAKH, M.S.; CHARONSKIY, A.D.; SHARAPOV, K.A.

Nikolai Romanovich Briling; obituary. Avt.transp. 39 no.4:57 Ap '61. (MIRA 14:5)
(Briling, Nikolai Romanovich, 1876-1961)

APPROVED FOR RELEASE: 08/10/2001 CIA-RDP86-00513R000620120005-5"

"APPROVED FOR RELEASE: 08/10/2001 CIA-RDP86-00513R000620120005-5

KALISH, I., inzh. (Gdynya, Pol'sha)

Use of transistors in multivibrators. Elektrichestvo no.8:43-47 Ap '60. (MIRA 13:8)

(Pulse techniques (Electronics))
(Oscillators, Electric)

APPROVED FOR RELEASE: 08/10/2001 CIA-RDP86-00513R000620120005-5"

"APPROVED FOR RELEASE: 08/10/2001 CIA-RDP86-00513R000620120005-5

SHTROM, V.V ; SAPOZHNIKOV, M.Ya., kand. tekhn. nauk, prof., r tsenzent; KALISH, L.I., inzh., red.

[Equipment for the production of lightweight fillers] Oborudovanie dlia proizvodstva legkikh zapolnitelei. Moskva, Izd-vo "Mashinostroenie," 1964. 246 p. (MIRA 17:8)

APPROVED FOR RELEASE: 08/10/2001 CIA-RDP86-00513R000620120005-5"

"APPROVED FOR RELEASE: 08/10/2001 CIA-RDP86-00513R000620120005-5

VASIL'YEV, V.S., doktor tekhn. nauk, prof., red.; KALISH, L.I., red.

[Progressive technological processes used in the machinery industry] Progressivnye tekhnologicheskie protsessy v mashinostroenii. Moskva, Mashinostroenie, 1965. 197 p. (MIRA 18:10)

APPROVED FOR RELEASE: 08/10/2001 CIA-RDP86-00513R000620120005-5"

"APPROVED FOR RELEASE: 08/10/2001 CIA-RDP86-00513R000620120005-5

KALISH, R.M.

Effect of vacuuming mold cavities on the properties of die cast castings. Lit. proizv. no.8:14-16 Ag '63. (MIRA 16:10)

APPROVED FOR RELEASE: 08/10/2001 CIA-RDP86-00513R000620120005-5"

"APPROVED FOR RELEASE: 08/10/2001 CIA-RDP86-00513R000620120005-5

KALISH, R.M.

Calculation of the vacuum system for die casting. Lit. proizv. no.6:13-15 Je '64. (MIRA 18:5)

APPROVED FOR RELEASE: 08/10/2001 CIA-RDP86-00513R000620120005-5"

"APPROVED FOR RELEASE: 08/10/2001 CIA-RDP86-00513R000620120005-5

L 1709-66 EWT(m)/EWA(d)/EWP(t)/EWP(z)/EWP(b) IJP(c) MJW/JD
ACCESSION NR: AP5021955 UR/0193/65/000/008/0050/0052
621.785.32:621.3.011.3:669.721.5

AUTHOR: Kalish, R. M. (Cand. of technical sciences); Sokolovskiy, B. A.; Dement'yev, A. L.

TITLE: Experience in melting magnesium alloys in furnaces of the IPMV-500 type

SOURCE: Byulleten' tekhniko-ekonomicheskoy informatsii, no. 8, 1965, 50-52

TOPIC TAGS: magnesium alloy, induction furnace, melting furnace, heat transfer

ABSTRACT: Four commercial frequency induction furnaces with a removable 500 kg crucible (see figure), designed for melting magnesium alloys without recasting into distributing furnaces have been built and installed at an [unnamed] plant of the Central Volga Regional Economic Council. One of them has by now been operated for one and one-half years. The furnace's crucible is of an all-welded cone-shaped steel-plate design. Its walls are 20 mm thick and bottom 30 mm thick. The crucible is 1260 mm thick, with a mean inside diameter of 630 mm. Principal specifications of the furnace: time of melting and preparation of working alloy, 80 and 60 min (for cold and hot crucible, respectively); melt temperature, 850°C; maximum and mean furnace power, 350 and 320 kw, respectively; maximum furnace

Card 1/3

APPROVED FOR RELEASE: 08/10/2001 CIA-RDP86-00513R000620120005-5"

"APPROVED FOR RELEASE: 08/10/2001 CIA-RDP86-00513R000620120005-5

L 1709-66

ACCESSION NR: AP5021955

current, 1000 a: efficiency, 0.88; unit power requirement per kg of magnesium alloy produced, 0.6 kw. Operating experience shows that the production of magnesium alloys in this furnace rather than by the duplex process saves at least 12,000 rubles per year per furnace and takes only one-half as long. After disconnection of the furnace the metal is not removed for 15-20 min. During that period the temperature of the alloy continues to rise owing to heat transfer from the muffle rings. After this temperature reaches 780°C, the metal is cast into molds. Tests show that both the mechanical and corrosion properties of the ML-5 alloy produced in the IPMV-500 furnace are not inferior to those of the alloy produced by the duplex process.

ASSOCIATION: none

SUBMITTED: 00 ENCL: 01 SUB CODE: MM, IE

NO REF SOV: 000 OTHER: 000

Card 2/3

APPROVED FOR RELEASE: 08/10/2001 CIA-RDP86-00513R000620120005-5"

"APPROVED FOR RELEASE: 08/10/2001 CIA-RDP86-00513R000620120005-5

L 1709-66

ACCESSION NR: AP5021955

ENCLOSURE: 01

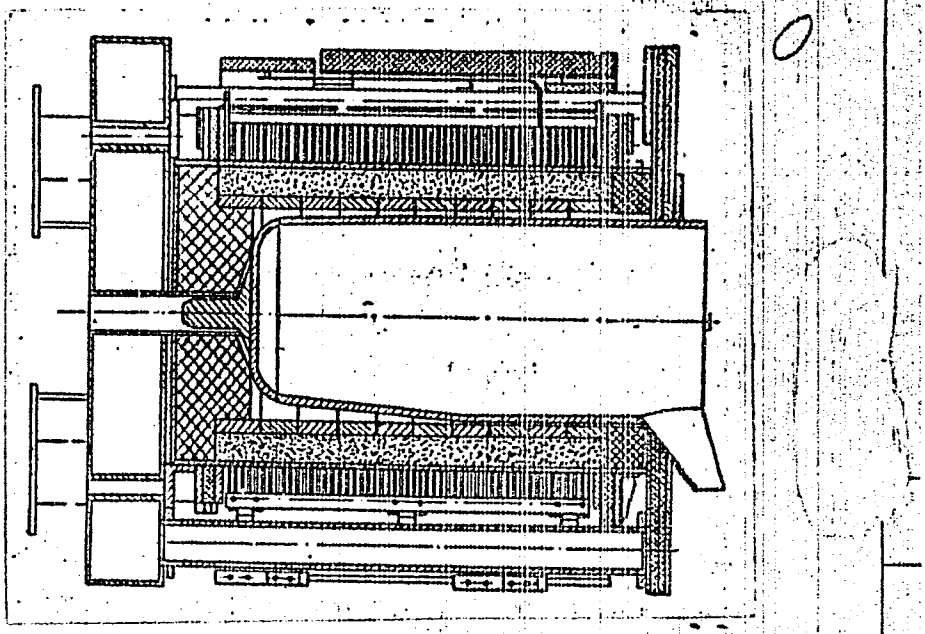

cross section of IPMV-500 type crucible furnace

Card 3/3

APPROVED FOR RELEASE: 08/10/2001 CIA-RDP86-00513R000620120005-5"

"APPROVED FOR RELEASE: 08/10/2001 CIA-RDP86-00513R000620120005-5

STOLYAROVA, M.K., kand.med.nauki; KALISH, S.A.

Eosinophilic granuloma of the temporal bone. Zhur. ush., nos. i gorl. bol. 23 no.4:76-78 Jl-Ag'63. (MIRA 16:10)

1. Iz kafedry bolezney ukha, gorla i nosa (zav. - zasluzhennyy deyatel' nauki Bashkirskoy ASSR prof. S.V. Mikhaylovskiy) L'vovskogo meditsinskogo instituta.
(EOSINOPHILIC GRANULOMA) (TEMPORAL BONE--TUMORS)

APPROVED FOR RELEASE: 08/10/2001 CIA-RDP86-00513R000620120005-5"

"APPROVED FOR RELEASE: 08/10/2001 CIA-RDP86-00513R000620120005-5

1. KALISH, S. A.

2. USSR (600)

4. Pharynx - Tumors

7. Retropharyngeal fibroma. Vest. oto-rin. 14 no. 6, 1952

9. Monthly List of Russian Accessions. Library of Congress. March 1953. Unclassified.

APPROVED FOR RELEASE: 08/10/2001 CIA-RDP86-00513R000620120005-5"

"APPROVED FOR RELEASE: 08/10/2001 CIA-RDP86-00513R000620120005-5

KALISH, S.A.

Modification of a laryngeal mirror. Zhur. ush., nos. i gorl. bol. 21 no.2:81 Mr-Ap '61. (MIRA 14:6)

1. Iz kliniki bolezney ukha, gorla i nosa (zav. - zasluzhennyy deyatel' nauki Bashkirskoy ASSR prof. S.V.Mikhaylovskiy) L'vovskogo meditsinskogo instituta.
(OTOLARYNGOLOGY--INSTRUMENTS AND APPARATUS)

APPROVED FOR RELEASE: 08/10/2001 CIA-RDP86-00513R000620120005-5"

"APPROVED FOR RELEASE: 08/10/2001 CIA-RDP86-00513R000620120005-5

KALISH, S.A.

Survey of the articles which appeared in the collection, "Der Schnupfen" ("The Common Cold"), published in the German Democratic Republic in 1959 under the editorship of Professor G.Eigler and Dr.D.G.Findeisen. Zhur.ush., nos.i gorl.bol. 22 no.2:84-87 Mr-Ap '62. (MIRA 15:11)

(COLD (DISEASE))

APPROVED FOR RELEASE: 08/10/2001 CIA-RDP86-00513R000620120005-5"

"APPROVED FOR RELEASE: 08/10/2001 CIA-RDP86-00513R000620120005-5

KALISH, Samuil Ionovich; CHEBANENKO, Konstantin Ivanovich; ~~BOGOPOL'SKIY, B.Kh.~~, otv. red.; SHOROKHOVA, A.V., red. izd-va; OVSEYENKO, V.G., tekhn. red.

[Handbook for the mine hoist operator]Spravochnik mashinista shakhtnoi pod"emnoi mashiny. Moskva, Gosgortekhizdat, 1962. 207 p. (MIRA 15:9)

(Mine hoisting)

APPROVED FOR RELEASE: 08/10/2001 CIA-RDP86-00513R000620120005-5"

"APPROVED FOR RELEASE: 08/10/2001 CIA-RDP86-00513R000620120005-5

RASKIN, Iosif Aleksandrovich; KALISH, Samuil Ionovich; MATVEYEV, Vladimir Ivanovich. Prinimali uchastiye; DUBROVSKIY, V.I.; KOPEYKIN, V.N.; D'YAKOVA, G.B., red. izd-va; IL'INSKAYA, G.M., tekhn. red.

[Installation, adjustment and operation of fans in mines]Montazh, naladka i ekspluatatsiia shakhtnykh ventiliatorov. Moskva, Gosgortekhizdat, 1962. 296 p. (MIRA 16:2)
(Mine ventilation)

APPROVED FOR RELEASE: 08/10/2001 CIA-RDP86-00513R000620120005-5"

"APPROVED FOR RELEASE: 08/10/2001 CIA-RDP86-00513R000620120005-5

KALISH, Samuil Ionovich; NAYDENKO, Ivan Samoylovich; CHEBANENKO, Konstantin Ivanovich; SUPRUNOV, Vitaliy Fedorovich; CHAYKA, Boris Nikolayevich; PETRAKOV, Aleksandr Ivanovich; DOLANSKIY, Yuzef Gilyar'yevich; MALAKHOV, S.M., retsenzent.

[Assembly, operation, and repair of hoisiting equipment] Montazh, ekspluatatsiia i naladka pod"emnykh ustanovok. [By] S.I.Kalish i dr. Moskva, Nedra, 1964. 446 p. (MIRA 18:3)

APPROVED FOR RELEASE: 08/10/2001 CIA-RDP86-00513R000620120005-5"

"APPROVED FOR RELEASE: 08/10/2001 CIA-RDP86-00513R000620120005-5

CA KALISH, T.V.

2

Effect of oxygen adsorbed on platinum on the contact potential difference. T. V. Kalish and R. Kh. Burshtein. *Doklady Akad. Nauk S.S.S.R.* 81, 1063-6(1951).—The contact potential difference is measured by the current-voltage curve of a diode in which Pt (foil of 10.6 sq. cm. or wire of 4.2 sq. cm. surface area) is anode, and W cathode. From measurements with the Pt reduced with H at 400°, then outgassed at 1100–200° and evacuated to 10^{-6} mm. Hg, and with Pt exposed to O, and then evacuated to remove unadsorbed gas, it follows that at room temp., under 0.1 mm. Hg of O, only a fraction of a monolayer is adsorbed. Both the rate of adsorption and the amt. adsorbed increase with the temp.; at 800°, the amt. of O taken up by the Pt corresponds to some 300 layers. The work function φ of Pt having adsorbed 17.5 × 10^{18} mols. O/sq. cm. at 200° is increased by about 0.2 v.; however, this increase of φ disappears after 11 hrs., and φ goes back to practically the original value for a pure Pt surface. Renewed adsorption of 41.2 × 10^{18} mols. O_2/sq. cm. again raises φ by 0.2 v., and this excess again vanishes after 12 hrs.; smaller amts. of O, 3 × 10^{18} to 20 × 10^{18} mols., fail to influence φ. However, with larger amts., 50 × 10^{18} – 200 × 10^{18} mols., one observes, first, a strong temporary increase of φ by up to 1.5 – 1.8 v., rapidly decreasing with time and attaining after 40–80 min. a value by 0.2–0.3 v. in excess of the normal φ; this excess vanishes slowly in a matter of 9–16 hrs. These effects are evidently due to a diffusion of O into the interior of the metal. Small amts. of O, as 17.1 × 10^{18} mol./sq. cm., which alter φ at 200°, have no effect at 400°; possibly, at 400°, the rate of diffusion into the interior is too fast for any increase of φ to be noticed. Desorption of O cannot account for these phenomena, first because it was not observed, and secondly, because it is highly improbable that O adsorbed at 200–400° should desorb at room temp. At 800°, under 0.1 mm. Hg of O, small amts. of O (8 × 10^{18} mols./sq. cm.) lower φ by about 0.1 v., but larger amts. increase φ, by up to 1.5 v. with 233 × 10^{18} mols. Adsorption of still larger amts. has no further effect on φ. With time (12–15 hrs.), the increment of φ goes back only insignificantly. Consequently, at 800°, the very nature of the bond between O and Pt is changed. There does remain on the Pt surface, adsorbed O which changes φ permanently. On the assumption that the const. φ corresponds to a monolayer, it follows that by far the major part of the O goes into the interior, leaving at the surface only about 1.2 × 10^{18} mols. O/sq. cm. Below the limiting const. φ, the increase of $\Delta\varphi$ with the amt. of O adsorbed is nearly linear.

N. Thon

APPROVED FOR RELEASE: 08/10/2001 CIA-RDP86-00513R000620120005-5"

"APPROVED FOR RELEASE: 08/10/2001 CIA-RDP86-00513R000620120005-5

KALISH, T. V.

KALISH, T. V. - "Effect of Oxygen, Absorbed by Platinum, on the Work of Releasing an Electron and the Electrochemical Behavior of a Platinum Electrode." Sub 24 Apr 52, Inst of Physical Chemistry, Acad Sci USSR. (Dissertation for the Degree of Candidate in Chemical Sciences).

SO: Vechernaya Moskva January-December 1952

APPROVED FOR RELEASE: 08/10/2001 CIA-RDP86-00513R000620120005-5"