"APPROVED FOR RELEASE: 09/17/2001 CIA-RDP86-00513R000721730004-7

ASHIROV, K.B.; GUBANOV, A.I.; KHANIN, I.L.; SURGUCHEV, M.L.; KOVALEV, V.S.; GROMOVICH, V.A.

Conditions governing the development of the Kuleshovka oil field. Geol. nefti i gaza 7 no.10:26-34 O '63. (MIRA 17:10)

1. Gosudarstvennyy institut po proyektirovaniyu i issledovatel'skim rabotam neftedobyvayushchey promyshlennosti vostochnykh rayonov strany i Kuybyshevneft'.

APPROVED FOR RELEASE: 09/17/2001 CIA-RDP86-00513R000721730004-7"

"APPROVED FOR RELEASE: 09/17/2001 CIA-RDP86-00513R000721730004-7

BROD. I.O.; BEGISHEV, F.A.; GABRIELYAN, A.G.; OVANESOV, G.P.; SEYFUL'-MULYUKOV, R.B.; SHORNIKOV, B.Ya.; SHPIL'MAN, I.A.; KHANIN, I.L.

Oil and gas potential of the Volga-Ural region, the lower Volga Valley, and the Caspian salt-dome region as parts of the northern Caspian oil- and gas-bearing basin. [Trudy] NILneftegaza no.10:5-16 '63. (MIRA 18:3)

1. Nauchno-issledovatel'skaya laboratoriya geologicheskikh kriteriyev otsenki perspektiv neftegazonosonosti; Upravleniya neftyanoy i gazovoy promyshlennosti Verkhne-Volzhskogo i Sredne-Volzhskogo sovetov narodnogo khozyaystva i i Orenburgskoye geologicheskoye upravleniye.

APPROVED FOR RELEASE: 09/17/2001 CIA-RDP86-00513R000721730004-7"

"APPROVED FOR RELEASE: 09/17/2001 CIA-RDP86-00513R000721730004-7

KHANIN, I. M.

Fuel and heat analysis of coke-ovens Moskva, Metallurgizdat, 1948. 119 p.

APPROVED FOR RELEASE: 09/17/2001 CIA-RDP86-00513R000721730004-7"

"APPROVED FOR RELEASE: 09/17/2001 CIA-RDP86-00513R000721730004-7

KHANIN, I.M.

920. METHOD OF CALCULATIN TOTAL LOSS OF PRESSURE IN COLLECTING DUCTS OF COKE OVENS. Khanin, IM. (Izvest. Akad. Nauk S.S.S.R. Otdel Tekh Nauk (Bull. Acad.Sci. U.S.S.R., Sect. Tech. Sci.), Apr. 1950, (4), 568-574). Laboratory experiments were made with water flowing in pipes made up to represent a typical arrangement of flues. These and theoretical calculations led to a formula for the sum of local resistances arising at jundtions between branches and the main flue. This formula was verified on an actual coke over installation and is recommended for general use. (L)

Dnepropetrovsk Metallurgical Institute imeni Stalin.

APPROVED FOR RELEASE: 09/17/2001 CIA-RDP86-00513R000721730004-7"

"APPROVED FOR RELEASE: 09/17/2001 CIA-RDP86-00513R000721730004-7

KHANIN, I.M., dotsent.

Hearth channels with direct flow in coke oven regenerators.
Stal' 15 no.7:579-582 Jl '55. (MLRA 8:9)

1. Dnepropetrovskiy metallurgicheskiy institut
(Coke ovens)

APPROVED FOR RELEASE: 09/17/2001 CIA-RDP86-00513R000721730004-7"

"APPROVED FOR RELEASE: 09/17/2001 CIA-RDP86-00513R000721730004-7

KHANIN, Isaak Mayerovich

(Dnepropetrovsk Metallurgical Inst) - Academic degree of Doctor of Technical Sciences, based on his defense, 4 May 1954, in the Council of the Inst of Fossil Fuels of the Acad Sci USSR, of his dissertation entitled: "Theoretical Bases of Gas Movements in Coke Ovens."

Academic degree and/or title: Doctor of Sciences

SO: Decisions of VAK, List no. 27, 24 Dec 55, Byulletin' MVO SSSR Uncl. JPRS/NY 548

[illegible]

APPROVED FOR RELEASE: 09/17/2001 CIA-RDP86-00513R000721730004-7"

"APPROVED FOR RELEASE: 09/17/2001 CIA-RDP86-00513R000721730004-7

KHANIN, Isaak Markovich, professor, doktor tekhnicheskikh nauk; LEYTES, V.A., otvetstvennyy redaktor; SINYAVSKAYA, Ye.K., redaktor izdael'stva; ANDREYEV, S.P., tekhnicheskiy redaktor

[Studing the movement of gases in coke ovens by the method of similitude] Izuchenie dvizheniia gazov v koksovykh pechakh metodom podobiia. Khar'kov. Gos. nauchno-tekhn. izd-vo lit-ry po chernoi i tsvetnoi metallurgii, 1957. 202 p. (MLRA 10:2)
(Coke ovens) (Gas flow) (Engineering models)

APPROVED FOR RELEASE: 09/17/2001 CIA-RDP86-00513R000721730004-7"

"APPROVED FOR RELEASE: 09/17/2001 CIA-RDP86-00513R000721730004-7

Khanin, I. M.

68-10-6/22

AUTHORS: Khanin, I.M., (Dr.Tech.Sc.), Yaremchuk, V.A., and Kupriyenko, I.G.

TITLE: The Use of Radioactive Isotopes for Investigating the Flow of Gases in Coke Ovens (Primeneniye radioaktivnykh izotopov pri issledovanii dvizheniya gazov v koksovykh pechakh)

PERIODICAL: Koks i Khimiya, 1957, Nr 10, pp.20-25 (USSR)

ABSTRACT: Possible methods of the application of radioactive isotopes for studies of gas flow in the heating system of coke ovens are discussed. Methods for investigating on models the distribution of gases in regenerators, recirculation of waste gases and mixing of gas and air in heating flues are proposed. Some suggestions as to the application of radioactive isotopes on industrial ovens are also given. It is pointed out that in the process of carrying out such studies the proposed methods can be improved and the field of their application widened. There are 1 table, 4 figures and 13 references, of which 10 are Slavic.

ASSOCIATION: Dneptropetrovsk Institute of Chemical Technology (Dnepropetrovskiy Khimiko-Tekhnologicheskiy Institut)

AVAILABLE: Library of Congress.

Card 1/1

KHANIN, I.M.; KUPRIYENKO, I.G.; SHEYNGOL'D, M.A.; YAREMCHUK, V.A.

APPROVED FOR RELEASE: 09/17/2001 "CIA-RDP86-00513R000721730004-7"

Basic trends in the development of the construction of coke ovens abroad using the underjet gas distribution system. Koks i khim. no.7:58-64 '60. (MIRA 13:7)

1. Dnepropetrovskiy khimiko-tekhnologicheskiy institut.

(Coke ovens)

"APPROVED FOR RELEASE: 09/17/2001 CIA-RDP86-00513R000721730004-7

KHANIN, I.M.; IVANOV, S.M.; KANTSYNEL', M.B.

Studying the flow distribution in hollow apparatus with different types of gas inlets. Dop.AN URSR no.3:316-320 '61. (MIRA 14:3)

1. Dnepropetrovskiy khimiko-tekhnologicheskiy institut. Predstavleno akademikom AN USSR N.N.Dobrokhotovym.
(Gas flow)

APPROVED FOR RELEASE: 09/17/2001 CIA-RDP86-00513R000721730004-7"

"APPROVED FOR RELEASE: 09/17/2001 CIA-RDP86-00513R000721730004-7

KHANIN, I.M.; LERNER, R.Z.; KUPRIYENKO, I.G.; PODOL'KHOV, I.S.

Mechanism for the turning of twin gas and air valves. Biul. TSIICHM no.4:53 '61. (MIRA 14:10)
(Coke ovens—Equipment and supplies)

APPROVED FOR RELEASE: 09/17/2001 CIA-RDP86-00513R000721730004-7"

"APPROVED FOR RELEASE: 09/17/2001 CIA-RDP86-00513R000721730004-7

KHANIN, I.M., doktor tekhn.nauk; GOL'DFARB, E.M., kand.tekhn.nauk

Temperature oscillations in coke-oven division walls. Koks i khim. no. 5:20-24 '61. (MIRA 14:4)

1. Dnepropetrovskiy khimiko-tekhnologicheskiy institut.
(Coke ovens)

APPROVED FOR RELEASE: 09/17/2001 CIA-RDP86-00513R000721730004-7"

"APPROVED FOR RELEASE: 09/17/2001 CIA-RDP86-00513R000721730004-7

KHANIN, I.M.; IVANOV, S.M.; KARTSYNEL', M.B.

Hydrodynamics of the reactor for the nonsaturation production of ammonium sulfate. Koks i khim. no.7:37-42 Jl '61. (MIRA 14:9)

1. Dnepropetrovskiy khimiko-tekhnologicheskiy institut.
(Ammonium sulfate)

APPROVED FOR RELEASE: 09/17/2001 CIA-RDP86-00513R000721730004-7"

"APPROVED FOR RELEASE: 09/17/2001 CIA-RDP86-00513R000721730004-7

KHANIN, I.M.

"Gas fitter for coke ovens" by V.A.Leites, M.A.Sheingol'd, IA.M. Obukhovskii. Reviewed by I.M.Khanin. Koks i khim. no.8:58-61 '61. (MIRA 15:1)

1. Dnepropetrovskiy khimiko-tekhnologicheskiy institut.
(Coke ovens) (Leites, V.A.) (Sheingol'd, M.A.)
(Obukhovskii, IA.M.)

APPROVED FOR RELEASE: 09/17/2001 CIA-RDP86-00513R000721730004-7"

"APPROVED FOR RELEASE: 09/17/2001 CIA-RDP86-00513R000721730004-7

KHANIN, I.M.; KUPRIYENKO, I.G.; YAREMCHUK, V.A.; LERNER, R.Z.; PODOL'KHOV, I.S.

Designing reversible gas-air valves for combination coke ovens with two-hearth flues. Koks i khim. no.1:36-38 '62. (MIRA 15:2)

1. Dnepropetrovskiy khimiko-tekhnologicheskiy institut (for Khanin, Kupriyenko, Yaremchuk). 2. Gosplan RSFSR (for Lerner). 3. Dnepropetrovskiy koksokhimicheskiy zavod (for Podol'khov).
(Coke ovens)

APPROVED FOR RELEASE: 09/17/2001 CIA-RDP86-00513R000721730004-7"

"APPROVED FOR RELEASE: 09/17/2001 CIA-RDP86-00513R000721730004-7

KHANIN, I.M., doktor tekhn.nauk

"Coke oven firing" by E.M.Izraelit, M.S. Chernnykh.
Reviewed by I.M. Khanin. Koks i khim. no.12:62-64 '61.
(MIRA 15:2)

(Coke ovens)
(Izraelit, E.M.)
(Chernnykh, M.S.)

APPROVED FOR RELEASE: 09/17/2001 CIA-RDP86-00513R000721730004-7"

"APPROVED FOR RELEASE: 09/17/2001 CIA-RDP86-00513R000721730004-7

KHANIN, I.M.; KUPRIYENKO, I.G.; YAREMCHUK, V.A.

Discussing the article "Control of PVR ovens with separate regenerators in case of heating with coke-oven gas" by G.M. Vol'fskii, R.K. Krupatkina, A.I. Ivanov. Koks i khim. no.4:63-64 '62. (MIRA 16:8)

1. Dnepropetrovskiy khimiko-tekhnologicheskiy institut.
(Coke ovens) (Vol'fskii, G.M.)
(Krupatkina, R.K.) (Ivanov, A.I.)

APPROVED FOR RELEASE: 09/17/2001 CIA-RDP86-00513R000721730004-7"

"APPROVED FOR RELEASE: 09/17/2001 CIA-RDP86-00513R000721730004-7

KHANIN, I.M.; KARTSYNEL'M.B.; YAKOVLEV, V.I.; PORTYNENKO, V.A.; BONDARENKO, I.P.

Intensification of the process of benzene recovery. Koks i khim. no.9:40-43 '62. (MIRA 16:10)

1. Dnepropetrovskiy khimiko-tekhnologicheskiy institut (for Khanin, Kartaynel', Yakovlev). 2. Gosudarstvennyy institut po proyektirovaniyu predpriyatiy koksokhimicheskoy promyshlennosti (for Portynenko). 3. Zhdanovskiy koksokhimicheskiy zavod (for Bondarenko).

(Shrubber (Chemical technology))
(Benzene)
(Coke industry--By-products)

APPROVED FOR RELEASE: 09/17/2001 CIA-RDP86-00513R000721730004-7"

"APPROVED FOR RELEASE: 09/17/2001 CIA-RDP86-00513R000721730004-7

IVANOV, S.M.; KHANGI, I.N.

Distribution of streams in a tubular apparatus with the system of gas supply along the cross section. Trudy [illegible] no.16 : 133-138 [illegible] (MIRA 17:8)

Aerodynamics of a cyclone reactor with atomizers. Ibid.:13[illegible]-48

APPROVED FOR RELEASE: 09/17/2001 CIA-RDP86-00513R000721730004-7"

"APPROVED FOR RELEASE: 09/17/2001 CIA-RDP86-00513R000721730004-7

KUPRIYCNKO, I.G.; KHANIN, I.M.

Experimental study of the distribution of flows in a heating system of coke ovens with underjet gas feed. Trudy DKHTI no.16:183-195 '62 (MIRA 17:8)

Resistance of the regenerator packing of coke ovens in the process of modeling. Ibid.:197-207

APPROVED FOR RELEASE: 09/17/2001 CIA-RDP86-00513R000721730004-7"

"APPROVED FOR RELEASE: 09/17/2001 CIA-RDP86-00513R000721730004-7

KHANIN, I.M., doktor tekhn. nauk; KARTSYNEL', M.B., kand. khim. nauk; IVANOV, S.M.

Absorption of ammonia in cyclone reactors with sprayers. Khim. prom. [Ukr.] no.2:6-10 Ap-Je '63. (MIRA 16:8)

1. Dnepropetrovskiy khimiko-tekhnologicheskiy institut.

APPROVED FOR RELEASE: 09/17/2001 CIA-RDP86-00513R000721730004-7"

"APPROVED FOR RELEASE: 09/17/2001 CIA-RDP86-00513R000721730004-7

KHANIN, I.M.; AMSTISLAVSKIY, D.M.; BABKIN, M.S.

Effect of the automation of coke-oven charging on the technological indices of their performance. Koks i khim. no.2:27-28 '63. (MIRA 16:2)

1. Dnepropetrovskiy khimiko-tekhnologicheskiy institut (for Khanin).
2. Zhdanovskiy koksokhimicheskiy zavod (for Amstislavskiy, Babkin).
(Coke ovens) (Automation)

APPROVED FOR RELEASE: 09/17/2001 CIA-RDP86-00513R000721730004-7"

"APPROVED FOR RELEASE: 09/17/2001 CIA-RDP86-00513R000721730004-7

BABKIN, M.S.; KHANIN, I.M.

Improvement of the thermal operating conditions of ovens and the heat expended for coking. Trudy DKHTI no.16:129-134 '63.
(MIRA 17:2)

APPROVED FOR RELEASE: 09/17/2001 CIA-RDP86-00513R000721730004-7"

"APPROVED FOR RELEASE: 09/17/2001 CIA-RDP86-00513R000721730004-7

TYUTYUNNIK, L.N.; KHANIN, I.M.

Experimental investigation of transient processes in the thermal operating conditions of coke ovens. Trudy DKHTI no.16:135-146 '63. (MIRA 17:2)

APPROVED FOR RELEASE: 09/17/2001 CIA-RDP86-00513R000721730004-7"

"APPROVED FOR RELEASE: 09/17/2001 CIA-RDP86-00513R000721730004-7

DERYUGIN, V.G.; KHANIN, I.M.

Method of investigating the flow of gases in the horizontal flues of coke oven batteries. Trudy DKHTI no.16:159-167 '63.
(MIRA 17:2)

APPROVED FOR RELEASE: 09/17/2001 CIA-RDP86-00513R000721730004-7"

"APPROVED FOR RELEASE: 09/17/2001 CIA-RDP86-00513R000721730004-7

BABKIN, M.S.; KHANIN, I.M.

Efficient charging of coke ovens and the heat expended for coking. Trudy DKHTI no.16:169-179 '63. (MIRA 17:2)

APPROVED FOR RELEASE: 09/17/2001 CIA-RDP86-00513R000721730004-7"

"APPROVED FOR RELEASE: 09/17/2001 CIA-RDP86-00513R000721730004-7

KHANIN, I.M.; BAKUN, N.A.; SATANOVSKIY, S.Ya.

On A.A.Agroskin's book "Chemistry and coal technology." Reviewed by I.M.Khanin, N.A.Bakun, S.IA.Satanovskii. Izv.vys.ucheb.zav.;khim.i khim.tekh. 6 no.4:699-702 '63. (MIRA 17:2)

APPROVED FOR RELEASE: 09/17/2001 CIA-RDP86-00513R000721730004-7"

"APPROVED FOR RELEASE: 09/17/2001 CIA-RDP86-00513R000721730004-7

KHANIN, I.M., doktor tekhn. nauk; TYUTYUNIK, L.N.

Republican Scientific and Technical Conference on the modeling of coke ovens and chemical apparatuses. Met. i gornorud. prom. no.1:75-76 Ja-F '64. (MIRA 17:10)

APPROVED FOR RELEASE: 09/17/2001 CIA-RDP86-00513R000721730004-7"

"APPROVED FOR RELEASE: 09/17/2001 CIA-RDP86-00513R000721730004-7

TAYTS, Ye.M., doktor tekhn. nauk; SHVARTS, S.A., kand. tekhn. nauk[deceased]; PEYSAKHZON, I.B., inzh.; GEL'FER, M.L., inzh.; DMITRIYENKO, M.T., inzh.; DORFMAN, G.A., inzh.; IZRAELIT, Ye.M., inzh.; KULAKOV, N.K., inzh.; KUSHLYANSKIY, B.S., inzh.; MEYKSON, L.V., inzh.[deceased]; LEONOV, A.S., inzh.; SHVARTS, G.A., inzh.; SHVARTSMAN, I.Ya., inzh.; YATSENKO, N.Ya., inzh.; BABIN, P.P., inzh.; KHANIN, I.M., doktor tekhn. nauk, prof., red.; KOZYREV, V.P., inzh., red., KUPERMAN, F.I., inzh., red.; LGALOV, K.I., inzh., red.; LEYTES, V.A., inzh., red.; LERNER, B.Z., inzh., red.; POTAPOV, A.G., inzh., red.; SHELKOV, A.K., red.

[By-product coke industry worker's handbook in six volumes] Spravochnik koksokhimika v shesti tomakh. Moskva, Metallurgiia. Vol.2. 1965. 288 p. (MIRA 18:8)

APPROVED FOR RELEASE: 09/17/2001 CIA-RDP86-00513R000721730004-7"

"APPROVED FOR RELEASE: 09/17/2001 CIA-RDP86-00513R000721730004-7

L 08576-67 EWT(m) DS/FDN/WW

ACC NR: AP6033481 SOURCE CODE: UR/0413/66/000/018/0083/0084

INVENTOR: Khanin, I. M.; Smul'sov, A. S.; Brodskiy, E. V.; Mizin, V. A.

ORG: none

41

B

TITLE: Liquid atomizer. Class 24, No. 186066

SOURCE: Izobret prom obraz tov zn, no. 18, 1966, 83-84

TOPIC TAGS: fuel atomizer, fuel atomization, fuel injector

ABSTRACT: The proposed liquid atomizer consists of a housing containing a guide assembly inside it. In order to obtain uniform atomization of large volumes of liquids at low pressures, the nozzle guide assembly is provided with disks, placed one above another, and having offcenter openings with different diameters. A cylindrical partition is mounted under the upper disk (see Fig. 1). Orig. art. has: 1 figure. [WA No. 88]

UDC: 697.932.6

Card 1/2

APPROVED FOR RELEASE: 09/17/2001 CIA-RDP86-00513R000721730004-7"

"APPROVED FOR RELEASE: 09/17/2001 CIA-RDP86-00513R000721730004-7

L 08576-67

ACC NR: AP6033481

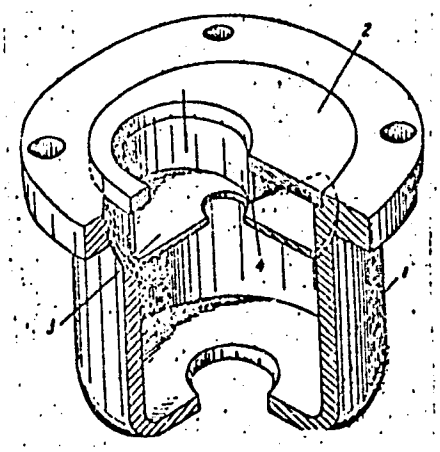

Fig. 1. Liquid atomizer

1 - Housing; 2 - upper disk; 3 - lower disk; 4 - partition.

SUB CODE: 21/ SUBM DATE: 15Apr65

APPROVED FOR RELEASE: 09/17/2001 CIA-RDP86-00513R000721730004-7"

"APPROVED FOR RELEASE: 09/17/2001 CIA-RDP86-00513R000721730004-7

KHANIN, L.

Highly efficient asphalt mixer. Muk.-elev.prom. 22 no.1:26-27 Ja '56. (MLRA 9:5)

1. Vsesoyuznyy trest Spetszagotstroy.
(Asphalt) (Mixing machinery)

APPROVED FOR RELEASE: 09/17/2001 CIA-RDP86-00513R000721730004-7"

"APPROVED FOR RELEASE: 09/17/2001 CIA-RDP86-00513R000721730004-7

KHANIN, L.; RYABIKOV, B.N., red.; NAB[illegible]ULLINA, R.S., tekhn. red.

[Sons of Tartary are heroes of the Soviet Union] Geroi Sovetskogo Soiuza - syny Tatarii. Kazan', Tatarskoe knizhnoe izd-vo, 1963. 679 p. (MIRA 16:11)
(Tatar A.S.S.R.--Soldiers)

APPROVED FOR RELEASE: 09/17/2001 CIA-RDP86-00513R000721730004-7"

"APPROVED FOR RELEASE: 09/17/2001 CIA-RDP86-00513R000721730004-7

KHANIN, L.A., kand. med. nauk

Rupture of a dissecting aneurysm of the splenic artery in pregnancy.
Zdrav. Belor. 5 no.2:55-57 F '59 (MIRA 12:7)

1. Iz khirurgicheskogo otdeleniya (zaveduyushchiy L.A. Khanin) Brestskoy oblastnoy bol'nitsy (glavnyy vrach V.G. Tishchenko).
(ANEURYSMS) (PREGNANCY, COMPLICATIONS OF)

APPROVED FOR RELEASE: 09/17/2001 CIA-RDP86-00513R000721730004-7"

"APPROVED FOR RELEASE: 09/17/2001 CIA-RDP86-00513R000721730004-7

KHANIN, L.A.; TISHCHENKO, V.G.

Conference of Surgeons of Brest Province. Zdrav. Bel. 9 no.7: 90 Jl '63 (MIRA 17:4)

APPROVED FOR RELEASE: 09/17/2001 CIA-RDP86-00513R000721730004-7"

"APPROVED FOR RELEASE: 09/17/2001 CIA-RDP86-00513R000721730004-7

KHANIN, L.A., kanf.med.nauk; KANONIDI, P.I.

Ectopia of the bladder and ureter. Zdrav.Bel. 8 no.7:56-57 Jl '62. (MIRA 15:11)

1. Iz 2-go khirurgicheskogo otdeleniya Brestskoy oblastnoy bol'nitsy (glavnyy vrach - zasluzhennyy vrach BSSR V.G.Tishchenko).
(BLADDER--DISPLACEMENT)
(URETERS--ABNORMITIES AND DEFORMITIES)

APPROVED FOR RELEASE: 09/17/2001 CIA-RDP86-00513R000721730004-7"

"APPROVED FOR RELEASE: 09/17/2001 CIA-RDP86-00513R000721730004-7

KHANIN, L.A., kand.med.nauk; TISHCHENKO, V.S., zasluzhennyy vrach BSSR

Fibromas of the mesentery of the small intestine. Zdrav.Bel. 9 no.2:68-69 F'63. (MIRA 16:7)

1. Iz khirurgicheskogo otdeleniya Brestskoy oblastnoy bol'nitsy.
(MESENTERY—TUMORS)

APPROVED FOR RELEASE: 09/17/2001 CIA-RDP86-00513R000721730004-7"

"APPROVED FOR RELEASE: 09/17/2001 CIA-RDP86-00513R000721730004-7

KHANIN, L.B., inzh.

Work of machinery operators of the Bolderaja Silicate Plant.
Stroi.mat. 6 no.2:25-26 F '60. (MIRA 13:6)
(Riga--Silicates)

APPROVED FOR RELEASE: 09/17/2001 CIA-RDP86-00513R000721730004-7"

"APPROVED FOR RELEASE: 09/17/2001 CIA-RDP86-00513R000721730004-7

ARKHANGORODSKIY, L.A.; BUKSHTEYN, Ya.A.; VOROB'YEV, S.V.; GAYENKO, P.A.; DOLGOV, Ye.N.; ZHIGLIN, A.A.; ZUBOVSKIY, G.P.; ISHKOV, I.G.; KRYZHANOVSKAYA, G.L.; LISTRATOV, A.A.; LUR'YE, R.I.; MOROZOV, N.P.; OSTROZETSER, A.S.; PAVLOV, N.A.; PETROV, L.M.; POPOV, V.N.; TARTAKOVSKIY, A.A.; TAUBE, D.N.; KHANIN, L.T.; SHAPIRO, TS.S.; SHVAYTSBURG, B.A.; SHEVTSOV, V.D.; DENISENKOVA, L.M., red.

[Assembler's handbook on performing mechanical assembly and special work on grain elevators and grain processing enterprises] Spravochnik montazhnika; po proizvodstvu mekhano-montazhnykh i spetsial'nykh rabot na elevatorakh i predpriiatiiakh po pererabotke zerna. Moskva, TSentr. in-t nauchno-tekhn. informatsii i tekhniko-ekon. issl., 1963. 519 p. (MIRA 17:7)

APPROVED FOR RELEASE: 09/17/2001 CIA-RDP86-00513R000721730004-7"

"APPROVED FOR RELEASE: 09/17/2001 CIA-RDP86-00513R000721730004-7

KHANIN, M.

For mass aeronautic sports! Kryl.rod.8 no.11:19-20 N '57.
(MIRA 10:12)

1. Predsedatel' Irkutskogo oblastnogo komiteta Vsesoyuznogo Dobrovol'nogo obshchestva sodeystviya armii, aviatsii i flotu.
(Aeronautics) (Military education)

APPROVED FOR RELEASE: 09/17/2001 CIA-RDP86-00513R000721730004-7"

"APPROVED FOR RELEASE: 09/17/2001 CIA-RDP86-00513R000721730004-7

KAMENTSOV, A.; KHANIN, M.; KUCHERENKO, A.; TISHCHENKO-RAYEVSKIY, Ye.

Overall continuous flow line. Avt.transp. 41 no.4:22-24 Ap '63. (MIRA 16:5)

1. Kiyevskiy taksomotornyy park No.1.
(Kiev--Taxicabs--Maintenance and repair)

APPROVED FOR RELEASE: 09/17/2001 CIA-RDP86-00513R000721730004-7"

"APPROVED FOR RELEASE: 09/17/2001 CIA-RDP86-00513R000721730004-7

TELYATNIKOV, I.A.; KHANIN, M.A., dotsent; TANYBEKOV, M.A., assistent, zasluzhennyy veterinarnyy vrach Kazakhskoy SSR

"Bloodless" method for the castration of animals. Veterinariia 41 no.10:52-55 O '64. (MIRA 18:11)

1. Glavnyy veterinarnyy vrach sovkhoza "Ufimskiy" Bashkirskoy ASSR (for Telyatnikov). 2. Alma-Atinskiy zootekhnicheskoye-veterinarnyy Institut (for Khanin).

APPROVED FOR RELEASE: 09/17/2001 CIA-RDP86-00513R000721730004-7"

"APPROVED FOR RELEASE: 09/17/2001 CIA-RDP86-00513R000721730004-7

KHANIN, M.A., dotsent; TYNYBEKOV, I.A., assistent

Effectiveness of various dates and methods of a castration.
Veterinariia 42 no.11:64-65 N '65.
(MIRA 19:1)

1. Alma-Atinskiy zootekhnicheako-veterinarnyy institut.

APPROVED FOR RELEASE: 09/17/2001 CIA-RDP86-00513R000721730004-7"

"APPROVED FOR RELEASE: 09/17/2001 CIA-RDP86-00513R000721730004-7

ACC NR: AP7005615 SOURCE CODE: UR/0413/67/000/002/0052/0053

INVENTOR: Belevtsev, A. T.; Dudkin, L. D.; Yerofeyev, R. S.; Lidorenko, N. S.; Khanin, M. A.

ORG: none

TITLE: A method for manufacturing thermoelements. Class 21, No. 190448 [announced by the All-Union Scientific Research Institute of Current Sources (Vsesoyuznyy nauchno-issledovatel'skiy institut istochnikov toka)]

SOURCE: Izobreteniya, promyshlennyye obraztsy, tovarnyye znaki, no. 2, 1967, 52-53

TOPIC TAGS: thermocouple, temperature sensitive element, CURRENT CARRIER

ABSTRACT: A method of making thermocouples with a variable concentration of electric current carriers along the operating temperature gradient is introduced. To assure both optimum variable concentration of the carriers and thermodynamic stability of the elements, the amount of alloying impurities in the carrier concentration is determined by the specific solubility of the alloying impurities, thus assuring the desired relationship between the carrier concentration and temperature—i.e., $n \approx T^{3/4}$.

[JR]

SUB CODE: 09/ SUBM DATE: 29Jul65

Card 1/1 UDC: 621.362.1

APPROVED FOR RELEASE: 09/17/2001 CIA-RDP86-00513R000721730004-7"

"APPROVED FOR RELEASE: 09/17/2001 CIA-RDP86-00513R000721730004-7

USSR/Diseases of Farm Animals - General Problems. R-1

Abs Jour : Ref Zhur- Biol., No 10, 1958, 45367

Author : Khanin, M.A.

Inst : Alma-Ata Zooveterinary Institute.

Title : Castration of Adult Rams.

Orig Pub : Tr. Alma-Atinsk. zoovet. in-ta, 1956, 9, 218-232

Abstract : No abstract.

Card 1/1

APPROVED FOR RELEASE: 09/17/2001 CIA-RDP86-00513R000721730004-7"

KHANIN, M. A. Cand Vet Sci -- (diss) "On the Etiology and Pathogenesis of Post-Castration Complications in Adult Rams and a Rational Method of Their Castration." Omsk, 1957. 13 pp 20 cm. (Omsk Veterinary Inst of the Min of Agriculture USSR), 130 copies (KL, 26-57, 111)

"APPROVED FOR RELEASE: 09/17/2001 CIA-RDP86-00513R000721730004-7

KHANIN, M.A., assistent

Castration of mature rams. Trudy AZVI 9:218-232 '56. (MIRA 15:4)

1. Iz kafedry obshchey i chastnoy khirurgii (zav. kafedroy - kand. veterinarnykh nauk, dotsent N.F.Fat'kin) Alma-Atinskogo zooveterinarnogo instituta.

(Castration) (Rams)

APPROVED FOR RELEASE: 09/17/2001 CIA-RDP86-00513R000721730004-7"

"APPROVED FOR RELEASE: 09/17/2001 CIA-RDP86-00513R000721730004-7

KHANIN, M. D.

KHANIN, M. D. -- "Soils and Soil Complexes of the Lower Courses of the Rivers Emba and Sagiz." Academy of Science Kazakh SSR. Institute of Soil Science. Alma-Ata, 1955. (Dissertation for the Degree of Candidate in Agricultural Sciences.)

So; Knizhaya Letopis' No 3, 1956

APPROVED FOR RELEASE: 09/17/2001 CIA-RDP86-00513R000721730004-7"

"APPROVED FOR RELEASE: 09/17/2001 CIA-RDP86-00513R000721730004-7

KHANIN, M.D., kand.sel'skokhozyaystvennykh nauk

Row placement of superphosphate for hemp at the time of sowing. Agrobiologiia no.1:58-63 Ja-F '59. (MIRA 12:4)

1. Institut lubyanykh kul'tur, g. Glukhov.
(Hemp--Fertilizers and manures)
(Phosphates)

APPROVED FOR RELEASE: 09/17/2001 CIA-RDP86-00513R000721730004-7"

"APPROVED FOR RELEASE: 09/17/2001 CIA-RDP86-00513R000721730004-7

TIMONIN, M.A., kand. tekhn. nauk; SENCHENKO, G.I., kand. sel'-khoz. nauk; ARINSHTEYN, A.I., kand. sel'khoz. nauk; GORSHKOV, P.A., doktor sel'khoz. nauk; ZHUKOV, M.S., kand. sel'khoz. nauk; DEMKIN, A.P., kand. sel'khoz. nauk; KRASHENINNIKOV, N.A., kand. sel'khoz. nauk; GORODNIY, N.G., doktor sel'khoz.nauk; REPYAKH, I.I., nauchn. sotr.; PIL'NIK, V.I., kand. sel'khoz.nauk; KHANIN, M.D., kand. sel'khoz. nauk; TSELIK, V.Z., st. nauchn. sotr.[deceased]; KOZINETS, N.I., nauchn. sotr.; ZHALNINA, L.S., nauchn. sotr.; LYASHENKO, S.N., kand. sel'khoz. nauk; GONCHAROV, G.I., inzh.; BUYANOV, V.I., inzh.; RUDNIKOV, V.N., st. nauchn. sotr.; BLOKHINA, V.V., red.; PROKOF'YEVA, A.N., tekhn.red.; SOKOLOVA,N.N., tekhn.red.

[Hemp] Konoplia. Moskva, Sel'khozizdat, 1963. 462 p. (MIRA 16:12)

1. Vsesoyuznyy nauchno-issledovatel'skiy institut lubyanykh kul'tur (for all except Blokhina, Prokof'yeva, Sokolova).
(Hemp)

APPROVED FOR RELEASE: 09/17/2001 CIA-RDP86-00513R000721730004-7"

"APPROVED FOR RELEASE: 09/17/2001 CIA-RDP86-00513R000721730004-7

KHANIN, M.G.; KAYEM, R.I.

Primary cancer of the duodenum. Khirurgiia 39 no.6:130-131 Je '63. (MIRA 17:5)

1. Iz 3-go khirurgicheskogo otdeleniya (zav. - prof. G.D. Vilyavin) i otdela patologicheskoy anatomii (zav. - doktor med. nauk D.S. Sarkisov) Instituta khirurgii imeni A.V. Vishnevskogo (dir. - deystvitel'nyy chlen AMN SSSR prof. A.A. Vishnevskiy) AMN SSSR.

APPROVED FOR RELEASE: 09/17/2001 CIA-RDP86-00513R000721730004-7"

"APPROVED FOR RELEASE: 09/17/2001 CIA-RDP86-00513R000721730004-7

CHEKMAREV, A.P., akademik; VATKIN, Ya.L., doktor tekhn. nauk; KHANIN, M.I., inzh.

Determining the neutral tangential cross section of the center of deformation in diagonal rolling. Proizv. trub no.10:24-31 '63. (MIRA 17:10)

1. AN UkrSSR (for Chekmarev).

APPROVED FOR RELEASE: 09/17/2001 CIA-RDP86-00513R000721730004-7"

"APPROVED FOR RELEASE: 09/17/2001 CIA-RDP86-00513R000721730004-7

VATKIN, Ya.L., doktor tekhn. nauk; CHERNYAVSKIY, A.A., kand. tekhn. nauk; KAZAKOV, V.E., inzh.; GLIKIN, M.P., inzh.; PERCHANIN, V.V., inzh.; KHANIN, M.I., inzh.; BIBA, V.I., inzh.

Reducing internal laps in tube rolling on Pilgrim mills. Stal' 24 no.1.63-67 Ja '64. (MIRA 17:2)

1. Dnepropetrovskiy metallurgicheskiy institut i zavod im. Libknekhta.

APPROVED FOR RELEASE: 09/17/2001 CIA-RDP86-00513R000721730004-7"

"APPROVED FOR RELEASE: 09/17/2001 CIA-RDP86-00513R000721730004-7

CHEKMAREV, A.P., akademik; VATKIN, Ya.L., doktor tekhn. nauk; KHANIN, M.I., inzh.; KUSHCHINSKIY, G.N., inzh.

Piercing on mills with oblique rolls and axial billet support. Stal' 24 no.12:1113-1116 D '64. (MIRA 18:2)

1. AN UkrSSR (for Chekmarev).

APPROVED FOR RELEASE: 09/17/2001 CIA-RDP86-00513R000721730004-7"

"APPROVED FOR RELEASE: 09/17/2001 CIA-RDP86-00513R000721730004-7

CHEKMAREV, A.P., akademik; VATKIN, Ya.L., doktor tekhn. nauk; KHANIN, M.I.; KUSHCHINSKIY, G.N.

Accelerating the piercing process on inclined roll mills using axial support of the blank. Met. i gornorud. prom. no.5:34-36 S-O '64. (MIRA 18:7)

1. Akademiya nauk Ukrainskoy SSR (for Chekmarev).

APPROVED FOR RELEASE: 09/17/2001 CIA-RDP86-00513R000721730004-7"

"APPROVED FOR RELEASE: 09/17/2001 CIA-RDP86-00513R000721730004-7

SOV/98-58-11-6/15

AUTHORS: Yermakov, V.S. and Khanin, M.L., Engineers

TITLE: The Water Power Resources of the Belorussian SSR (Gidroenergeticheskiye resursy Belorusskoy SSR)

PERIODICAL: Gidrotekhnicheskoye stroitel'stvo, 1958, Nr 11, pp 28-34 (USSR)

ABSTRACT: The Belorussian Republic has no hydroelectric power plants on its territory. The needs of industry and population are met by thermoelectric power plants, fuelled mainly with peat. The authors find that the planned construction of hydroelectric power plants will solve the power problems of the republic. The possible locations of these plants on the main rivers are enumerated. There are 2 tables, 2 charts, 1 profile and 1 graph.

1. Power plants--USSR

Card 1/1

APPROVED FOR RELEASE: 09/17/2001 CIA-RDP86-00513R000721730004-7"

"APPROVED FOR RELEASE: 09/17/2001 CIA-RDP86-00513R000721730004-7

KHANIN, M. L.

"Duration and Strength of Immunity in Persons Inoculated with Egg Yolk Tularemia Vaccine," from the monograph Effect of Vaccination Against Tularemia, 1953. p. 146

Kuban Medical Inst., Chair Microbiology

Translation D 568409

APPROVED FOR RELEASE: 09/17/2001 CIA-RDP86-00513R000721730004-7"

"APPROVED FOR RELEASE: 09/17/2001 CIA-RDP86-00513R000721730004-7

KHANIN, M.I.

Increasing the effectiveness of bacteriological diagnosis of obliterated and atypical forms of dysentery. Zhur. mikrobiol. epid. i immun 28 no.2:142 F '57 (MLRA 10:4)

1. Iz kafedry mikrobiologii Kubanskogo meditsinskogo instituta.
(DYSENTERY)

APPROVED FOR RELEASE: 09/17/2001 CIA-RDP86-00513R000721730004-7"

"APPROVED FOR RELEASE: 09/17/2001 CIA-RDP86-00513R000721730004-7

KHANIN, M.L.; KUZNETSOVA, V.A.; FEDORKOVA, D.K.

The role of convalescents in the epidemiology of dysentery. Zhur. mikrobiol.epid. i immun. 29 no.3:122 Mr '58. (MIRA 11:4)

1. Iz Kubanskogo meditsinskogo instituta i I gorodskoy polikliniki.
(DYSENTERY)

APPROVED FOR RELEASE: 09/17/2001 CIA-RDP86-00513R000721730004-7"

"APPROVED FOR RELEASE: 09/17/2001 CIA-RDP86-00513R000721730004-7

KOROTYAYEV, A.I.; KHANIN, M.L.

New method of determining the activity of proteolytic enzymes. Lab. delo 5 no.1:5-7 Ja-F '59. (MIRA 12:3)

1. Iz kafedry mikrobiologii (zav. - prof. B.P. Pervushin) Kubanskogo meditsinskogo instituta, Krasnodar.
(PEPSIN) (TRYPSIN)
(CHYMOTRYPSIN)

APPROVED FOR RELEASE: 09/17/2001 CIA-RDP86-00513R000721730004-7"

"APPROVED FOR RELEASE: 09/17/2001 CIA-RDP86-00513R000721730004-7

KHANIN, M.L.; GRISHINA, L.I.

Results of the Krasnodar Territory conference of bacteriologists of sanitation and epidemiological control stations. Zhur.mikrobiol. epid.i immun. 31 no.9:156-157 S '60. (MIRA 13:11)
(KRASNODAR TERRITORY--BACTERIOLOGY)

APPROVED FOR RELEASE: 09/17/2001 CIA-RDP86-00513R000721730004-7"

"APPROVED FOR RELEASE: 09/17/2001 CIA-RDP86-00513R000721730004-7

KHANIN, M.L.; KOROTYAYEV, A.I.

Characteristics of medicinal resistance of dysentery pathogens isolated in the city of Krasnodar. Antibiotiki 6 no.2:161-162 F '61. (MIRA 14:5)

1. Kafedra mikrobiologii Kubanskogo meditsinskogo instituta.
(KRASNODAR—SHIGELLA) (ANTIBIOTICS)

APPROVED FOR RELEASE: 09/17/2001 CIA-RDP86-00513R000721730004-7"

"APPROVED FOR RELEASE: 09/17/2001 CIA-RDP86-00513R000721730004-7

KHANIN, M.L.

Pyelotomy in obturated concretion of the pelvis in a single functioning kidney. Zdrav.Bel. 8 no.11:85-86 N '62. (MIRA 16:5)

1. Iz khirurgicheskogo otdeleniya Brestskoy oblastnoy bol'nitsy (glavnyy vrach - zasluzhennyy vrach BSSR V.G. Tishchenko).
(CALCULI, URINARY)

APPROVED FOR RELEASE: 09/17/2001 CIA-RDP86-00513R000721730004-7"

"APPROVED FOR RELEASE: 09/17/2001 CIA-RDP86-00513R000721730004-7

RAZUMOVICH, M.B.; KHANIN, M.L.; KAZAKEVICH, Ye.I.; PAVLENKO, O.P.; YERYSHEV, A.V.

Effect on the photographic emulsion of the volatile products of tissue decomposition occurring during inflammatory processes. Zhur. nauch. i prikl. fot. i kin. 9 no.1:60-61 Ja-F'64. (MIRA 17:2)

1. Pedagogicheskiy institut imeni A.S. Pushkina, Brest.

APPROVED FOR RELEASE: 09/17/2001 CIA-RDP86-00513R000721730004-7"

"APPROVED FOR RELEASE: 09/17/2001 CIA-RDP86-00513R000721730004-7

PROCESSES AND PROPERTIES INDEX

116

Ca

Effect of thiourea on the function of the thyroid gland. M. N. Khanin, T. G. Terekhova, and Ch. I. Burshtein. *Klin. Med.* (U.S.S.R.) 25, No. 3, 35-8(1947).—A review of antithyroid substances and confirmation of the effects of thiourea on growth, O consumption, and histology of the thyroid.
H. L. Williams

ASM-SLA METALLURGICAL LITERATURE CLASSIFICATION

APPROVED FOR RELEASE: 09/17/2001 CIA-RDP86-00513R000721730004-7"

"APPROVED FOR RELEASE: 09/17/2001 CIA-RDP86-00513R000721730004-7

KHANIN, M. N.

29271 Osnovnyye itogi izucheniya tak nazyvayemogo toksicheskogo gepatita s astistom. V sb: Nauch. sessiya Akad. nauk 'zSSR 24-28 yanv. 1949 g. Doklady Med. Sektsii. Tashkent, 1949, s. 9-18. - Bibliogr: 8 nazv.

SO: Letopsi' Zhurnal'nykh Statey, Vol. 39, Moskva, 1949

APPROVED FOR RELEASE: 09/17/2001 CIA-RDP86-00513R000721730004-7"

"APPROVED FOR RELEASE: 09/17/2001 CIA-RDP86-00513R000721730004-7

KHANIN, M. N.

From the Russian for Dr. Roderick Murray
Ter. arkh. Moskva 25(6): 12-24 (in part); 1953

Experimental Hepatitis and Cirrhosis of the Liver
by
M.N. Khanin
(From the Chair of Pathological Physiology of the Tashkent Med. Inst.)

Translated at the National Institutes of Health, Bethesda, Maryland.
Full translation available in [redacted]/M.

APPROVED FOR RELEASE: 09/17/2001 CIA-RDP86-00513R000721730004-7"

"APPROVED FOR RELEASE: 09/17/2001 CIA-RDP86-00513R000721730004-7

APPROVED FOR RELEASE: 09/17/2001 CIA-RDP86-00513R000721730004-7"

"APPROVED FOR RELEASE: 09/17/2001 CIA-RDP86-00513R000721730004-7

KHANIN, M.N.

Significance of age in the development of experimental liver cirrhosis. Biul.eksp.biol.i med. 37 no.3:25-28 Mr '54. (MLRA 7:6)

1. Iz kafedry patofiziologii (zav. doktor med. nauk M.N.Khanin) Tashkentskogo meditsinskogo instituta imeni V.M.Molotova (dir. dotsent A.G. Gulamov)
(LIVER CIRRHOSIS, experimental, *age factor)

APPROVED FOR RELEASE: 09/17/2001 CIA-RDP86-00513R000721730004-7"

"APPROVED FOR RELEASE: 09/17/2001 CIA-RDP86-00513R000721730004-7

KHANIN, M. N.

"The Etiology of the So-Called Dzhalangar Encephalitis," a report presented at the First Conference of Pathologists of Central Asia and Kazakhstan held in Stalingrad, 12-15 Feb 1955, Ark. Patol., 17, No 3, pp 83-87, 1955

Abstract Sum. 1003, 20 Jul 56

APPROVED FOR RELEASE: 09/17/2001 CIA-RDP86-00513R000721730004-7"

USSR/Human and Animal Physiology - Liver. V-8

Abs Jour : Ref Zhur - Biol., No 1, 1958, 4129

Author : M. Khanin

Inst : Academy of Sciences, UzSSR

Title : Heliotropic Dystrophy of the Liver (Toxic Hepatitis With Ascites).

Orig Pub : In: Voprosy krayevoy patol. Geliotrop. distrofiya. pecheni. Trikhodesmin. entsefalit. Tashkent, AN UzSSR, 1956, 7-21

Abstract : After the administration of 50 mg/kg of heliotropin (I) to dogs, disturbances of the hepatic functions were observed during 60-45 days. A subcutaneous injection of 500 mg/kg of I to rats led to the development, in the first 2-7 days, of a central necrosis in the liver; 25-35 days later, the hepatic structure was back to

Card 1/2

tein synthesis in the liver and ascites. Small doses of heliotrope seeds, taken with food, led - in rats - to the development of cirrhosis of the liver, without manifestations of toxic hepatitis with ascites.

"APPROVED FOR RELEASE: 09/17/2001 CIA-RDP86-00513R000721730004-7

KHANIN, M. N.

general pathologic syndrome. This syndrome is

APPROVED FOR RELEASE: 09/17/2001 CIA-RDP86-00513R000721730004-7"

"APPROVED FOR RELEASE: 09/17/2001 CIA-RDP86-00513R000721730004-7

KHANIN, M.N., prof. (Tashkent).

Certain aspects of regional pathology according to data of physiopathological investigations. Pat.fiziol.i eksp.terap. 2 no.5:48-50 S-O '58 (MIRA 11:12)
(RESEARCH, med., in Russia (Rus))

APPROVED FOR RELEASE: 09/17/2001 CIA-RDP86-00513R000721730004-7"

"APPROVED FOR RELEASE: 09/17/2001 CIA-RDP86-00513R000721730004-7

KHANIN, M.N., prof. (Tashkent)

Heliotropic liver dystrophy [with summary in English]. Arkh.pat. 20 no.12:3-15 '58. (MIRA 12:1)

(LIVER DISEASES,
dustrophy with ascites caused by food containing Heliotropium lasiocarpum seeds, review (Rus))
(FOOD,
liver dystrophy with ascites caused by food containing Heliotropium lasiocarpum seeds, review (Rus))
(SEEDS,
same)

APPROVED FOR RELEASE: 09/17/2001 CIA-RDP86-00513R000721730004-7"

"APPROVED FOR RELEASE: 09/17/2001 CIA-RDP86-00513R000721730004-7

KHANIN, M.N., prof.; BURSHTEYN, Ch.I., dotsent; KARIMOV, Z.N., dotsent; KINEL', V.I., assistent; MANKUS, T.G., assistent; SHAFRINA, K.A., assistent; RASULEV, Sh.I., assistent; PANKOVA, L.P., assistent

Development of radiation sickness in animals following X-irradiation. Med.zhur. Uzb. no.11:11-16 N '60. (MIRA 14:5)

1. Iz kafedry patologicheskoy fiziologii (zav. - prof. M.N.Khanin) i kafedry rentgenologii i meditsinskoy radiologii (zav. - prof. S.A.Molchanov) Tashkentskogo gosudarstvennogo meditsinskogo instituta.
(RADIATION SICKNESS)

APPROVED FOR RELEASE: 09/17/2001 CIA-RDP86-00513R000721730004-7"

"APPROVED FOR RELEASE: 09/17/2001 CIA-RDP86-00513R000721730004-7

37645

S/638/61/003/000/003/005
D296/D307

27.2400

AUTHOR: Khanin, M.N.

TITLE: The influence of hypothermia on the development of radiation sickness in animals

SOURCE: Trudy Tashkentskoy konferentsii po mirnomu ispol'zovaniyu atomnoy energii. v. 3. Tashkent, Izd-vo AN Uzb. SSR, 1961, 78 - 82

TEXT: The author tried to establish whether hypothermia exerted a therapeutic or prophylactic effect upon radiation sickness as hypothermia is generally used to decrease the intensity of the metabolism and the reflex reactions. In the first series of experiments (12 rabbits) the animals were first brought into a state of hypothermia by means of ganglion-blocking drugs and physical cooling and then exposed to x rays in a dose of 800 r. They were kept in the state of hypothermia for a further 2 - 12 hours. In the second series of experiments (8 rabbits) the animals were first exposed to the same dose of x rays and immediately after exposure brought into a state of hypothermia lasting 2-12 hours. 16 rabbits were exposed

Card 1/3

APPROVED FOR RELEASE: 09/17/2001 CIA-RDP86-00513R000721730004-7"

"APPROVED FOR RELEASE: 09/17/2001 CIA-RDP86-00513R000721730004-7

to x rays at normal body temperature (control). Among the 16 control rabbits 4 perished within 12 days, and one after 90 days; among 12 rabbits exposed to radiation in a state of hypothermia 4 perished within 12 days and one after 35 days. Among 8 rabbits brought into a state of hypothermia after the radiation 7 perished within 12 days and only one rabbit survived. These results show that exposure to radiation in a state of hypothermia has the same effect as exposure at normal body temperature. If hypothermia is applied after exposure to radiation it tends to aggravate the course of radiation sickness. The author explains this unexpected fact by the assumption that hypothermia exerts no direct effect upon the vegetative vascular reflex response to humoral stimuli: after exposure to radiation the white cell count showed the same changes in the control animals as in the animals kept in a state of hypothermia, changes which are mainly caused by redistribution of the leucocytes in the circulation due to vascular reflexes. The same applies to changes in the serum albumen fraction caused by permeability changes in the vascular wall. It thus appears that those parts of the central nervous system which are inhibited by hypothermia and play an important role in a state of oxygen deficiency or after exposure to painful stimuli,

APPROVED FOR RELEASE: 09/17/2001 CIA-RDP86-00513R000721730004-7"

"APPROVED FOR RELEASE: 09/17/2001 CIA-RDP86-00513R000721730004-7

PETROV, I.R., prof., red.; KHANIN, M.N., prof., zasl. deyat. nauki Uzbekskoy SSR, red.; FEDOTOVA, Z.G., red.; CHAYKA, G.V., red.; SUKHANOV, P.P., tekhn. red.

[Transactions of the Third All-Union Conference of Pathophysiologists]Trudy Vsesoiuznoi konferentsii patofiziologov, 1960. Tashkent, Medgiz, UzSSR. No.3.[Artificial hypothermia]Iskusstvennaia gipotermiia. 1961. 162 p. (MIRA 15:11)

1. Vsesoyuznaya konferentsiya patofiziologov, 3d, Sverdlovsk, 1960. 2. Deystvitel'nyy chlen Akademii meditsinskikh nauk SSSR (for Petrov). 3. Zaveduyushchiy kafedroy patologicheskoy fiziologii Tashkentskogo gosudarstvennogo meditsinskogo instituta (for Khanin).

(HYPOTHERMIA)

APPROVED FOR RELEASE: 09/17/2001 CIA-RDP86-00513R000721730004-7"

"APPROVED FOR RELEASE: 09/17/2001 CIA-RDP86-00513R000721730004-7

1. NAZAROV, S. V.; KHANIN, M. V., Eng.

2. USSR (600)

4. Windmills

7. UTV-5 universal silent windmill. Sel'khozmashina No. 4, pp. 16-18, 1953

9. Monthly List of Russian Accessions, Library of Congress, April 1953, Unclassified.

SOURCE CODE: UR/0207/66/000/006/0088/0093

APPROVED FOR RELEASE: 09/17/2001 CIA-RDP86-00513R000721730004-7"

ACC NR: AP7003255

AUTHOR: Khanin, M. V. (Moscow)

ORG: none

TITLE: A study of gas flow around a rough surface

SOURCE: Zhurnal prikladnoy mekhaniki i tekhnicheskoy fiziki, no. 6, 1966, 88-93

TOPIC TAGS: gas flow, fluid flow, eddy flow, flow analysis, surface flow

ABSTRACT: This paper deals with gas flow around a rough surface and the nature of its force effect resulting in the erosive breakdown of the surface. Many semicrystalline materials in practical use have roughness only a few hundredths of a millimeter thick and the erosive flow of gas around them can be studied only from simulation. The author makes assumptions about this model which can be expressed as

$$\rho \partial w/\partial t = -\operatorname{grad} p + \mu \nabla^2 w, \quad \operatorname{div} w = 0, \quad w_{ab} = \psi (l_{ab}, w^*), \tag{1}$$

where ρ is density; p, excess pressure, w, velocity vector; t, time; μ, coefficient of dynamic viscosity; w^*, parametric velocity value; l, radius vector; and ∇^2, the Laplace operator. Three scales of roughness are chosen; the models were of graphite and tested in a flume, partially submerged in a constant flow of water. The nature

Card 1/2

ACC NR: AP7003255

"APPROVED FOR RELEASE: 09/17/2001 CIA-RDP86-00513R000721730004-7

KHANIN, M. V.

KHANIN, M. V.--"Investigation of a Wind Wheel of the Velocipede Type." *(Dissertations For Degrees In Science And Engineering At USSR, Higher Educational Institutions). (34). Min Higher Education USSR, Moscow Order of Labor Red Banner Higher Technical School imeni Bauman, Moscow, 1955

SO: Knizhnaya Letopis' No. 34, 20 August 1955

* For the Degree of Doctor of Technical Sciences

APPROVED FOR RELEASE: 09/17/2001 CIA-RDP86-00513R000721730004-7"

"APPROVED FOR RELEASE: 09/17/2001 CIA-RDP86-00513R000721730004-7

KHANIN, M.V., kand. tekhn. nauk

Studying spectras of gas blast flows on underground gas producer models by means of filming. Podzem. gaz. ugl. no. 2:67-69 '58. (MIRA 11:7)

1. Vsesoyuznyy nauchno-issledovatel'skiy institut Podzemgaz.
(Gas flow--Spectra)
(Photography--Scientific applications)

APPROVED FOR RELEASE: 09/17/2001 CIA-RDP86-00513R000721730004-7"

"APPROVED FOR RELEASE: 09/17/2001 CIA-RDP86-00513R000721730004-7

L 09376-67 EWP(e)/EWT(m) WW/WH

ACC NR: AP6023207 SOURCE CODE: UR/0020/66/168/006/1303/1306

66
64
15

AUTHOR: Khanin, M. V.

ORG: none

TITLE: Investigation of the mechanism of erosion damage in polycrystalline graphite

SOURCE: AN SSSR. Doklady, v. 168, no. 6, 1966, 1303-1306

TOPIC TAGS: graphite, erosion, laminar flow, turbulent flow, surface roughness

ABSTRACT: A similarity-theory calculation is used to determine the nature of the damage produced on the surface of polycrystalline graphite placed in a gas stream, and to ascertain the character of the force exerted by the gas stream on the graphite after its surface becomes roughened by erosion. The calculation is based on the premise that the velocity profiles in the boundary layer next to the surface can be regarded as straight lines independently of whether the flow is laminar or turbulent, and that the dimensions of the regions next to the surface (where the Mach numbers are small) greatly exceed the heights of the irregularities on the real rough surface of the graphite. This makes it possible to treat the flow of a viscous gas in the direct vicinity of the solid surface and the flow of a viscous incompressible liquid. Differential equations and boundary conditions for the flow are written out and solved for several types of roughnesses (triangular, rectangular, circular, with flat, pointed, or round grooves, with different heights, etc.). It is shown that the roughness makes the flow pulsating. An expression is obtained for the frequency of

Card 1/2 UDC: 539.87

APPROVED FOR RELEASE: 09/17/2001 CIA-RDP86-00513R000721730004-7"

"APPROVED FOR RELEASE: 09/17/2001 CIA-RDP86-00513R000721730004-7

ACC NR: AP6023207

2

the pulsations. In the case of polycrystalline graphite with grains measuring 0.03 - 0.05 mm, the frequencies are of the order of 10^6 - 10^7 cps. Although each pulse itself is not strong enough to cause erosion, the repeated action of the pulses are capable of producing fatighe and hence failure and erosion. The phenomena observed in graphite are common to many other polycrystalline materials, which can be regarded as mechanical systems whose individual elements (grains) are characterized by definite natural frequencies. The degree of erosion depends on the relation between the frequency of the pulsations and the natural frequency of the grain projections. The author thankds V. I. Likhtman and G. I. Petrov for interest in the work. This report was presented by Academician P. A. Rebinder 25 September 1965. Orig. art. has: 4 figures and 5 formulas.

SUB CODE: 20/11/ SUBM DATE: 21Sep65/ ORIG REF: 003/ OTH REF: 002

Card 2/2 ZC

APPROVED FOR RELEASE: 09/17/2001 CIA-RDP86-00513R000721730004-7"

"APPROVED FOR RELEASE: 09/17/2001 CIA-RDP86-00513R000721730004-7

SOV/127-58-12-10/26

AUTHORS: Totmakov, A.V. and Khanin, M.Ya., Mining Engineers

TITLE: The Use of Plugs in Blasting Operations in the Krivoy Rog Basin Mines (Primeneniye zaboyki pri vzryvnykh rabotakh v shakhtakh Krivorozhskogo basseyna)

PERIODICAL: Gornyy zhurnal, 1958, Nr 12, pp 40 - 42 (USSR)

ABSTRACT: The authors claim that the blasting of charges, placed in the blast holes without plugging them, is not only contrary to security regulations, but also decreases the impact of the explosion, requires larger quantities of explosives, and increases the amount of poisonous gases in the gallery. The names of following scientists are mentioned in the article: Doctor of Technical Sciences A.F. Belyayev, G.A. Shetler and M.A. Magoychenkov. There are 5 tables and 5 Soviet references.

Card 1/1

APPROVED FOR RELEASE: 09/17/2001 CIA-RDP86-00513R000721730004-7"

"APPROVED FOR RELEASE: 09/17/2001 CIA-RDP86-00513R000721730004-7

Dissertation: "Theoretical Basis of the Motion of Gases of Coke Furnaces." Dr Tech Sci, Inst of Mineral Fuels, Acad Sci USSR, 4 May 54. (Vecherayaya Moskva, Moscow, 23 Apr 54)

SO: SUM 243, 19 Oct 1954

APPROVED FOR RELEASE: 09/17/2001 CIA-RDP86-00513R000721730004-7"

"APPROVED FOR RELEASE: 09/17/2001 CIA-RDP86-00513R000721730004-7

BLAGOVESTOV, B.K.; KHANIN, N.M., rukovoditel' laboratorii normirovaniya materialov.

Careful use of raw materials for footwear manufacture. Leg.prom. 16 no.2:3-7 F '56. (MLRA 9:7)

1.Glavnyy inzhener fabriki "Skorokhod" (for Blagovestov).
(Shoe industry)

APPROVED FOR RELEASE: 09/17/2001 CIA-RDP86-00513R000721730004-7"

"APPROVED FOR RELEASE: 09/17/2001 CIA-RDP86-00513R000721730004-7

KHANIN, N.M.

Cutting into strips and standardizing the consumption of tubular fabrics for edge trimming the upper parts of footwear. Leg. prom. 16 no.7:34-36 Jl '56. (MLRA 9:10)

(Shoe industry)

APPROVED FOR RELEASE: 09/17/2001 CIA-RDP86-00513R000721730004-7"

"APPROVED FOR RELEASE: 09/17/2001 CIA-RDP86-00513R000721730004-7

PEROV, N.P.; KHANIN, N.M.

Road to communist labor. Kozh.-obuv.prom. 2 no.5:26-27 My '60. (MIRA 13:9)

(Shoe manufacture--Labor productivity)

KHANIN, N.M.

APPROVED FOR RELEASE: 09/17/2001 CIA-RDP86-00513R000721730004-7"

Centralization of the cutting operations of shoe-upper in the Leningrad shoe factories. Kozh.-obuv.prom. 4 no.11:8-11. N '62. (MIRA 15:11)

(Leningrad—Shoe manufacture)

"APPROVED FOR RELEASE: 09/17/2001 CIA-RDP86-00513R000721730004-7

PA 28/49T22

KHANIN, N.

USSR/Engineering Oct 48
Engines, Diesel
Trucks, Performance

"Diesel YAAZ-204," N. Khanin, 3 pp

"Avtomobil'" No 10

First Diesel for truck use was manufactured by Yaroslavl Automobile Factory in 1947 and road tested during 1947 and 1948 in truck carrying 7-ton load. Average fuel consumption was 35 liters per 100 km. Gives basic characteristics of the engine. One photograph shows completed assembly. Sketches show four stages of piston operation.

[redacted] 28/49T22

APPROVED FOR RELEASE: 09/17/2001 CIA-RDP86-00513R000721730004-7"

"APPROVED FOR RELEASE: 09/17/2001 CIA-RDP86-00513R000721730004-7

KHANIN, N.

42572. Osobvennosti Ekspluatatsii Dizeley YAAZ. Avtomobil', 1948, No. 11, S. 12-14.
SM. Takzhe No. No: 42337, 42352, 42377.

APPROVED FOR RELEASE: 09/17/2001 CIA-RDP86-00513R000721730004-7"

"APPROVED FOR RELEASE: 09/17/2001 CIA-RDP86-00513R000721730004-7

KHANIN, N. S. (Engineer)

"Investigation of a High-Speed Volumetric Supercharger." Thesis for degree of Cand. Technical Sci. Sub 28 Jun 50, All-Union (non "State") Sci Res (Order of Labor Red Banner) Automobile and Automotive Inst.

Summary 71, 4 Sep 52, Dissertations Presented for Degrees in Science and Engineering in Moscow in 1950. From Vechernyaya Moskva, Jan-Dec 1950.

APPROVED FOR RELEASE: 09/17/2001 CIA-RDP86-00513R000721730004-7"

"APPROVED FOR RELEASE: 09/17/2001 CIA-RDP86-00513R000721730004-7

KHANIN, N. S.

Toplivo i smazka otechestvennykh bol'shegruznykh avtomobiley (Fuelling and lubrication of Russian heavy trucks, by) B.P. Kitskiy (and) N. S. Khanin. Moskva, Gostoptekhizdat, 1952.
172 p. illus., diagrs., tables.
"Literatura": p. (174)

SO: N/5
743.221
.K6

APPROVED FOR RELEASE: 09/17/2001 CIA-RDP86-00513R000721730004-7"

"APPROVED FOR RELEASE: 09/17/2001 CIA-RDP86-00513R000721730004-7

KHANIN, N. S.

USSR/Miscellaneous - Books

Card 1/1 : Pub. 12 - 11/12

Authors : Korotonoshko, N. I.; Kulikov, N. K.; Khanin, N. S.; Tarutin, A. A.; and Rutenberg, G. M.

Title : Critique and bibliography

Periodical : Avt. trakt. prom. 4, 31-33, Apr 1954

Abstract : Critical review of reports written by different authors, dealing in automotive and metallurgical technology.

Institution : [redacted] (State) Sci. Res. Automobile Motor Inst. (NAMI)

Submitted : .....

APPROVED FOR RELEASE: 09/17/2001 CIA-RDP86-00513R000721730004-7"

"APPROVED FOR RELEASE: 09/17/2001 CIA-RDP86-00513R000721730004-7

KHANIN, N.S.

KHANIN, N.S., kandidat tekhnicheskikh nauk; LYUBINSKIY, N.M., inzhener, retsenzent; BUDNIKOV, V.A., inzhener, redaktor.

[IaAZ-204 and IaAZ-206 engines; building, principles of operation, and repair] Dvigateli IaAZ-204 i IaAZ-206; ustroistvo, osobennosti ekspluatatsii i remonta. Moskva, Gos. nauchno-tekhn. izd-vo mashinostroit. i sudostroit. lit-ry, 1954. 262 p. (MLRA 7:6)

(Automobiles--Engines)

APPROVED FOR RELEASE: 09/17/2001 CIA-RDP86-00513R000721730004-7"

"APPROVED FOR RELEASE: 09/17/2001 CIA-RDP86-00513R000721730004-7

KHANIN, N.S.: kandidat tekhnicheskikh nauk; KALISH, G.G., doktor tekhnicheskikh nauk; ANDRONOVA, T.B., kandidat tekhnicheskikh nauk; KUKHAREV, M.N., kandidat tekhnicheskikh nauk; GERSHMAN, I.I.; CHAPKEVICH, V.A., kandidat tekhnicheskikh nauk; YERMOLAYEV, P.S.

Review of the book "Internal combustion engines," Edited by A.S. Orlin, N.S. Khanin and others. Avt. i trakt. prom. no.7: 45-46 Jl '56. (MLRA 9:10)

1. Nauchno-issledovatel'skiy avtomotornyy institut.
(Gas and oil engines) (Orlin, A.S.)

APPROVED FOR RELEASE: 09/17/2001 CIA-RDP86-00513R000721730004-7"

"APPROVED FOR RELEASE: 09/17/2001 CIA-RDP86-00513R000721730004-7

KHANIN, N.S.

VIKHERT, Mikhail Mikhaylovich; DOBROGAYEV, Rostislav Pavlovich; LYAKHOV, Mikhail Ivanovich; PAVLOV, Aleksey Vasil'yevich; SOLOV'YEV, Mikhail Petrovich, professor; STEPANOV, Yuriy Aleksandrovich; SUVOROV, Viktor Grigor'yevich; KHANIN, N.S., kandidat tekhnicheskikh nauk, retsenzent; CHISTOZVONOV, S.B., retsenzent; NECHAYEV, B.K., doktor tekhnicheskikh nauk, retsenzent; SHUBOVICH, S.I., kandidat tekhnicheskikh nauk, retsenzent; YEGORKINA, L.I., inzhener, redaktor; SOKOLOVA, T.F., tekhnicheskiy redaktor

[Construction and design of truck and tractor engines] Konstruktsiia i raschet avtotraktornykh dvigatelei. Pod red. IU.A.Stepanova. Moskva, Gos.nauchno-tekhn.izd-vo mashinostroit. lit-ry, 1957. 604 p. (MIRA 10:10)

1. Gosudarstvennyy soyuznyy ordena Trudovogo Krasnogo Znameni nauchno-issledovatel'skiy avtomobil'nyy i avtomotornyy institut (for Khanin, Chistozvonov). 2. Kafedra dvigateley vnytrennego sgoraniya Tomskogo politekhnicheskogo instituta (for Nechayev, Shubovich)

(Motortrucks--Engines) (Tractors--Engines)

APPROVED FOR RELEASE: 09/17/2001 CIA-RDP86-00513R000721730004-7"

"APPROVED FOR RELEASE: 09/17/2001 CIA-RDP86-00513R000721730004-7

SKOTNIKOV, Viktor Vasil'yevich; VEDENYAPIN, G.A.,red.; LIPGART, A.A., otv. red.; BORISOV, S.G.,red.; BRISKIN, M.I.,red.; DYBOV, O.V.,red.; ZIL'BERG, Ya. G.,red.; KOZLOVSKIY, I.S.,red.; LOZAR', A.S.,red.; LUNEV, I.S., red.; PEVZNER, Ya.M.,red.; PRYADILOV, V.I.,red.; RAMAYYA, K.S.,red.; SAMOL', G.I.,red.; SEDOVA, Ye.V.,red.; KHANIN, N.S.,red.; CHAPAYEV, A.A.red.; CHISTOZVONOV, S.B.,red.; SHKOL'NIKOV, E.M.,red.; YEGORKINA, L.I.,red.izd-va; SMIRNOVA, G.V.,tekhn.red.

[Intermediate transformation and temper brittleness of automobile body steels] Promezhutochnoe prevrashchenie i otpuskhaia khrupkost' v konstruktsionnykh avtomobil'nykh staliakh. Moskva, Gos.nauchno-tekhn. izd-vo mashinostroit. lit-ry 1958. 74 p. (Gosudarstvennyi nauchno-issledovatel'skii avtomobil'nyi i avtomotornyi institut Trudy, no.85) (MIRA 12:2)
(Steel, Automobile--Metallography)

APPROVED FOR RELEASE: 09/17/2001 CIA-RDP86-00513R000721730004-7"

"APPROVED FOR RELEASE: 09/17/2001 CIA-RDP86-00513R000721730004-7

LIPGART, Andrey Aleksandrovich, prof., red.; DYBOV, Oleg Vladimirovich,; SAMOL', Grigoriy Ivanovich,; KHAHIN, Naum Semoylovich,; CHISTOZVONOV, Sergey Borisovich,; KUGEL', P.Y., kand. tekhn. nauk, retsenzent,; ABRAMOVICH, A.D., inzh., red.; YEGORKINA, L.I., red. izd-va,; UVAROVA, A.F., tekhn. red.; MODEL', B.I., tekhn. red.

[V-type gasoline automobile engines] Avtomobil'nye benzinovye V-obraznye dvigateli. Pod obshchei red. A.A. Lipgarta. Moskva, Gos. nauchno-tekhn. izd-vo mashinostroit. lit-ry, 1958. 293 p. (MIRA 11:10)

(Automobiles--Engines)

APPROVED FOR RELEASE: 09/17/2001 CIA-RDP86-00513R000721730004-7"

"APPROVED FOR RELEASE: 09/17/2001 CIA-RDP86-00513R000721730004-7

SOV/113-58-11-5/16

AUTHORS: Khanin, N.S., Petrov, N.I., Candidates of Technical Sciences

TITLE: The Turbosupercharging of Compression Ignition Automobile Engines (Turbonadduv avtomobil'nykh dvigateley s vosplameneniyem ot szhatiya)

PERIODICAL: Avtomobil'naya promyshlennost', 1958, Nr 11, pp 17 - 21, (USSR)

ABSTRACT: The article discusses the advantages of turbosupercharging for diesel and other automobile engines. The indices of mostly 4-cycle serial automobile engines with radial turbosuperchargers of American, English, and West-German make are tabulated (table 1) and critically examined. Experiments conducted by NAMI confirmed similar investigations by the West German firm of MAN that the maximum capacity of the MAN engines with turbosupercharging can be increased by 40% as compared with the basic engines. In conclusion, the authors state that turbosupercharging is one of the promising means to increase the specific capacity of automobile diesel engines with a simultaneous increase in economy. The appli-

Card 1/2

APPROVED FOR RELEASE: 09/17/2001 CIA-RDP86-00513R000721730004-7"

cation of turbosupercharging in automobile engines entails several specific design problems which call for scientific research and experimental designing work. There are 2 diagrmas, 3 graphs, 1 table, and 2 Soviet references.

ASSOCIATION: NAMI - Gosudarstvennyy nauchno-issledovatel'skiy avtomobil'nyy i avtomotornyy institut

1. Automobile industry--USSR 2. Deisel engines 3. Turbosupercharges--Performance

Card 2/2

"APPROVED FOR RELEASE: 09/17/2001 CIA-RDP86-00513R000721730004-7

KHANIN, N.S., kand. tekhn. nauk; CHISTOZVONOV, S.B., inzh.

Modern diesel engines for automobiles. Vest. mash. 38 no.1:10-15 Ja '58. (MIRA 11:1)

(Diesel engines) (Automobiles--Engines)

APPROVED FOR RELEASE: 09/17/2001 CIA-RDP86-00513R000721730004-7"

"APPROVED FOR RELEASE: 09/17/2001 CIA-RDP86-00513R000721730004-7

ORLIN, Andrey Sergeyevich; KRUGLOV, Mikhail Georgiyevich; KHANIN, N.S., kand.tekhn.nauk, retsenzent; YEGORKINA, L.I., inzh., red.; TIKHANOV, A.Ya., tekhn.red.; MODEL', B.I., tekhn.red.

[Two-cycle internal combustion engines] Dvukhtaktnye dvigateli vnutrennego sgoraniia. Moskva, Gos.nauchno-tekhn.izd-vo mashinostroit.lit-ry, 1960. 555 p. (MIRA 13:10)
(Gas and oil engines)

APPROVED FOR RELEASE: 09/17/2001 CIA-RDP86-00513R000721730004-7"

"APPROVED FOR RELEASE: 09/17/2001 CIA-RDP86-00513R000721730004-7

KHANIN, N.S.

Two-row engines. Za rul. 18 no.7:20-21 Jl '60. (MIRA 13:10)

1. Gosudarstvennyy soyuznyy ordena Trudovogo Krasnogo Znameni nauchno-issledovatel'skiy avtomobil'nyy i avtomotornyy institut.
(Motor vehicles--Engines)

APPROVED FOR RELEASE: 09/17/2001 CIA-RDP86-00513R000721730004-7"

"APPROVED FOR RELEASE: 09/17/2001 CIA-RDP86-00513R000721730004-7

PETRUSHOV, V.A., inzh.; PASHIN, M.A., red.; LIPGART, A.A., otv.red.; AL'PEROVICH, A.G., red.; BORISOV, S.G., red.; BRISKIN, M.I., red.; DYBOV, O.V., red.; ZIL'BERBERG, Ya.G., red.; LOZAR', A.S., red; LUNEV, I.S., red.; NAGAYEV, P.V., red.; PEVZNER, Ya.M., red.; PRYADILOV, V.I., red.; RAMAYYA, K.S., red.; SAMOL', G.I., red.; SEDOVA, Ye.V., red.; TAMRUCHI, O.V., red.; KHANIN, N.S., red.; CHAPCHAYEV, A.A., red.; CHISTOZVONOV, S.B., red.; SHKOL'NIKOV, E.M., red.; YEGORKINA, L.I., red.izd-va; GORDEYEVA, L.P., tekhn. red.

[Operational analysis of the multiplate friction transformer] Analiz raboty mnogodiskovykh friktsionnykh transformatorov. Moskva, Gos.nauchno-tekhn.izd-vo mashinostroitel'noi lit-ry, 1960. 79 p.(Moscow. Gosudarstvennyi nauchno-issledovatel'skii avtomobil'nyi i avtomotornyi institut [Trudy], no.90).

(MIRA 13:8)

(Motor vehicles--Transmission devices)

APPROVED FOR RELEASE: 09/17/2001 CIA-RDP86-00513R000721730004-7"