"APPROVED FOR RELEASE: 09/17/2001 CIA-RDP86-00513R000722010013-5

BYSTROV, V.F.; SHULOV, L.M.; KHEYFITS, L.A.; MOLDOVANSKAYA, G.I.

Proton magnetic resonance spectra of terpene phenols prepared by condensation of camphene with phenol and cresols. Zhur. ob. khim 34 no.7:2476-2477 Jl '64 (MIRA 17:8)

1. Institut khimicheskoy fiziki AN SSSR i Vsesoyuznyy nauchno-issledovatel'skiy institut sinteticheskikh i natural'nykh dushistykh veshchestv.

APPROVED FOR RELEASE: 09/17/2001 CIA-RDP86-00513R000722010013-5"

"APPROVED FOR RELEASE: 09/17/2001 CIA-RDP86-00513R000722010013-5

GURA, Yu.; KHEYFITS, L.A.

Odorous substances from alkyl phenols. Part 5: Synthesis of odorous substances from the condensation products of tetramethylethylene with 3,4- and 3,5-xylenols. Zhur. ob. khim. 34 no.9 3068-3071 S '64. (MIRA 17:11)

1. Vsesoyuznyy nauchno-issledovatel'skiy institut sinteticheskikh i natural'nykh dushistykh veshchestv.

APPROVED FOR RELEASE: 09/17/2001 CIA-RDP86-00513R000722010013-5"

"APPROVED FOR RELEASE: 09/17/2001 CIA-RDP86-00513R000722010013-5

EPF(c)/EPR/EWT(m)/EWP(j)/T Pc-4/Pr-4/Ps-4 JAJ/RM/WW

ACCESSION NR: AP5007419

Khaylov, N. V.; Tokareva, L. G.; Popov, A. G.; Kheyfits, A.;

for stabilizing polymers.

This Author's Certificate ... more resist-
...ropylene, and articles made from ... -methylphenol
... as a stabilizer.

APPROVED FOR RELEASE: 09/17/2001 CIA-RDP86-00513R000722010013-5"

"APPROVED FOR RELEASE: 09/17/2001 CIA-RDP86-00513R000722010013-5

L 32990-65

Scientific Research

05Nov63 ENCL: 00 SUB CODE: MT, GC

000 OTHER: ---

Card 2/2

APPROVED FOR RELEASE: 09/17/2001 CIA-RDP86-00513R000722010013-5"

"APPROVED FOR RELEASE: 09/17/2001 CIA-RDP86-00513R000722010013-5

KHEYFITS, L.A.; PODBEREZINA, A.S.

Odorous substances from alkylphenols. Part 6: Synthesis of odorous substances from octylphenols. Zhur. org. khim. 1 no.1:89-92 Ja '65. (MIRA 18:5)

1. Vsesoyuznyy nauchno-issledovatel'skiy institut sinteticheskikh i natural'nykh dushistykh veshchestv, Moskva.

APPROVED FOR RELEASE: 09/17/2001 CIA-RDP86-00513R000722010013-5"

"APPROVED FOR RELEASE: 09/17/2001 CIA-RDP86-00513R000722010013-5

PODBEREZINA, A.S.; KHEYFITS, L.A.

Synthesis of odorous substances from alkylphenols. Part 7: Anomalous alkylation of phenol with 2-ethyl-1-hexene in the presence of aluminum phenolate. Zhur.org.khim. 1 no.2:283-286 F '65. (MIRA 18:4)

1. Vsesoyuznyy nauchno-issledovatel'skiy institut sinteticheskikh i natural'nykh dushistykh veshchestv.

APPROVED FOR RELEASE: 09/17/2001 CIA-RDP86-00513R000722010013-5"

"APPROVED FOR RELEASE: 09/17/2001 CIA-RDP86-00513R000722010013-5

GURA, Yu.; KHEYFITS, L.A.

Odorous substances from alkyl phenols. Part 8: Synthesis of odorous substances from the condensation products of tetramethylethylene with 2,4- and 2,6-xylenols. Zhur. org. khim. 1 no.6:1055-1057 Je '65. (MIRA 18:7)

1. Vsesoyuznyy nauchno-issledovatel'skiy institut sinteticheskikh i natural'nykh dushistykh veshchestv.

APPROVED FOR RELEASE: 09/17/2001 CIA-RDP86-00513R000722010013-5"

"APPROVED FOR RELEASE: 09/17/2001 CIA-RDP86-00513R000722010013-5

KHEYFITS, L.A.; MOLDOVANSKAYA, G.I.; SHULOV, L.M.

Terpene phenols. Part 20: Structure of terpene radicals in terpene phenols obtained from camphene. Zhur. org. khim. 1 no.6:1057-1063 Je '65. (MIRA 18:7)

1. Vsesoyuznyy nauchno-issledovatel'skiy institut sinteticheskikh i natural'nykh dushistykh veshchestv.

APPROVED FOR RELEASE: 09/17/2001 CIA-RDP86-00513R000722010013-5"

"APPROVED FOR RELEASE: 09/17/2001 CIA-RDP86-00513R000722010013-5

KHEYFITS, L.A.; SHULOV, L.M.

Terpene phenols Part 21: Structure of terpene radicals in terpene phenols obtained from o- and p-cresols and camphene. Zhur. org. khim. 1 no.6:1067-1067 Je '65. (MIRA 18:7)

1. Vsesoyuznyy nauchno-issledovatel'skiy institut sinteticheskikh i natural'nykh dushistykh veshchestv.

APPROVED FOR RELEASE: 09/17/2001 CIA-RDP86-00513R000722010013-5"

"APPROVED FOR RELEASE: 09/17/2001 CIA-RDP86-00513R000722010013-5

KHEYFITS, L.A.; GOL'DOVSKIY, A.Ye.

Terpene phenols. Part 22: Synthesis of norbornylcyclopentanones and norbornylcycloheptanones. Zhur. org. khim. 1 no.6:1067-1071 Je '65. (MIRA 18:7)

1. Vsesoyuznyy nauchno-issledovatel'skiy institut sinteticheskikh i natural'nykh dushistykh veshchestv.

APPROVED FOR RELEASE: 09/17/2001 CIA-RDP86-00513R000722010013-5"

"APPROVED FOR RELEASE: 09/17/2001 CIA-RDP86-00513R000722010013-5

KHEYFITS, L.A.; VIREZUB, S.I.

Terpene phenols. Part 26: Condensation products of dihydrocyclopentadiene with o- and p-cresols and the further transformations of condensation products. Zhur. org. khim. 1 no.8: 1384-1388 Ag '65. (MIRA 18:11)

1. Vsesoyuznyy nauchno-issledovatel'skiy institut sinteticheskikh i natural'nykh dushistykh veshchestv.

APPROVED FOR RELEASE: 09/17/2001 CIA-RDP86-00513R000722010013-5"

"APPROVED FOR RELEASE: 09/17/2001 CIA-RDP86-00513R000722010013-5

BOBROVSKAYA, G.D., kandidat meditsinskikh nauk; KHEYFITS, L.D.

Diffuse growth of osseous tissue in the skull. Vrach.delo no.2: 193-194 F '56. (MLRA 9:7)

1. Kafedra nervnykh bolezney (zaveduyushchiy deystvitel'nyy chlen AMN SSSR B.N.Man'kovskiy) Kiyevskogo meditsinskogo insituta.
(SKULL--ABNORMITIES AND DEFORMITIES)
(EYE--DISEASES AND DEFECTS)
(PENICILLIN)

APPROVED FOR RELEASE: 09/17/2001 CIA-RDP86-00513R000722010013-5"

"APPROVED FOR RELEASE: 09/17/2001 CIA-RDP86-00513R000722010013-5

L 11549-66

ACC NR: AP6005027 SOURCE CODE: UR/0105/65/000/001/0090/0090

AUTHOR: Aleksandrov, B. K.; Derman, B. A.; Drozdov, N. G.; Dubinskiy, L. A.; Zalesskiy, A. M.; Kamenskiy, M. D.; Kozlov, M. D.; Lisovskiy, G. S.; Sinelobov, K. S.; Trebulev, P. V.; Uspenskiy, B. S.; Kheyfits, M. D.; Shvetsov, M. A.

ORG: none

TITLE: Nikolay Nikolayevich Krachkovskiy

SOURCE: Elektrichestvo, no. 1, 1965, 90

TOPIC TAGS: electric power engineering, electric engineering personnel

ABSTRACT: Brief biography of subject, a senior scientific associate of the Institute of Power Enginnering AS USSR, on the occasion of his 75th birthday on 16 Dec 64. He was graduated from the Leningrad Polytechnical Institute in 1916. Worked for a number of years in the planning, surveying, construction and operation of the first HV transmission lines and substations. From 1922 to 1926, participated in the planning and construction of the first Soviet hydroelectric station (Volkov GES im. Lenin) and 110 kv transmission line. In 1927-1932, designed transmission lines at the GET (State Electrical Engineering Trust) and the Leningrad branch of Dneprostroy. Chief of electric power and transmission section at Sverdlovsk, Volgostroy and Leningrad Energoproyekt (1932-1938); simultaneously studied 100-cycle current for AS USSR and participated in planning the Kuybyshev GES - Moscow transmission line. Worked at Leningrad Gidroproyekt until 1947, and at Moscow Gidrenergoproyekt until 1955. Among the first to propose

Card 1/2 UDC: 621.31

APPROVED FOR RELEASE: 09/17/2001 CIA-RDP86-00513R000722010013-5"

"APPROVED FOR RELEASE: 09/17/2001 CIA-RDP86-00513R000722010013-5

L 11549-66

ACC NR: AP6005027

converting the Kuybyshev - Moscow line from 400 to 500 kv. An ardent advocate of d-c for HV and EHV transmission. Authored over 75 scientific and technical articles, and two inventions. Awarded the Order of the Red Banner of Labor and other decorations. Orig. art. has: 1 figure. [JPRS]

SUB CODE: 09 / SUBM DATE: none

HW

Card 2/2

APPROVED FOR RELEASE: 09/17/2001 CIA-RDP86-00513R000722010013-5"

"APPROVED FOR RELEASE: 09/17/2001 CIA-RDP86-00513R000722010013-5

SOV/112-57-9-18544

Translation from: Referativnyy zhurnal, Elektrotekhnika, 1957, Nr 9, p 62 (USSR)

AUTHOR: Kheyfits, M. E.

TITLE: Standard Stepdown Substations for Hydroelectric Construction Sites (Tipovyye ponizitel'nyye podstantsii dlya stroitel'stva gidroelektrostantsiy)

PERIODICAL: Sb.: Vopr. elektrosnabzheniya str-v gidroelektrostantsiy, M.-L., 1956, pp 41-61

ABSTRACT: A series of standard designs for stationary and mobile 110/6, 35/6, and 6/0.4 kv substations is described, as developed by Gidroenergoproyekt. Stationary 110/6 and 35/6-kv substations include only 1 or 2 transformers. The 110-kv substations are supplied from either a through-going line or spur line, and 1 or 2 bays are provided at the substation for outgoing lines. At the 35-kv substation, facilities for connecting 3-4 transmission lines are provided. Considering that a substation at a hydroelectric-development construction site has a service life of 5 years or less, no circuit breakers are provided for the 110- and 35-kv circuits or the 6-kv side of the main transformers; disconnecting switches are omitted in lightning arrester circuits and storage batteries

Card 1/3

APPROVED FOR RELEASE: 09/17/2001 CIA-RDP86-00513R000722010013-5"

"APPROVED FOR RELEASE: 09/17/2001 CIA-RDP86-00513R000722010013-5

KHEYFITS, M.E.

VINTER, A.V.; NEKRASOV, A.M.; SYROMYATNIKOV, I.A.; VOZNESENSKIY, A.N.; VASILENKO, P.I.; LAUPMAN, P.P.; TERMAN, I.A.; VINOGRADOV, N.P.; ANTOSHIN, N.N.; ALEKSANDROV, B.K.; USPENSKIY, B.S.; KLASSON, I.R.; KHEYFITS, M.E.; DRUTSKIY, V.F.; KRACHKOVSKIY, N.N.; POPOV, P.A.; CHELIDZE, I.M.; FILARETOV, S.N.; KOZLOV, M.D.; BERLIN, V.Ya.; SARADZHEV, A.Kh.; GORDZIYEVICH, I.S.; PAK, V.P.; DORFMAN, S.M.; DUBINSKIY, L.A.; UL'YANOV, S.A.; GRUDINSKIY, P.G.; KUVSHINSKIY, N.N.; ERMOLENKO, V.M.

Mikhail Mikhailovich Karpov. Elek.sta. 27 no.10:62 O '56. (MLRA 9:12)
(Karpov, Mikhail Mikhailovich, d.1956)

APPROVED FOR RELEASE: 09/17/2001 CIA-RDP86-00513R000722010013-5"

"APPROVED FOR RELEASE: 09/17/2001 CIA-RDP86-00513R000722010013-5

DVORKIN, Lazar' Il'ich; KHEYFITS, M.E., red.; FRIDKIN, A.M., tekhn.red.

[New arrangements of 6-110 kv. closed distribution devices and 35-400 kv open distribution devices] Novye komponovki zakrytykh raspredelitel'nykh ustroistv 6 - 110 kv. i otkrytykh raspredelitel'nykh ustroistv 35- 400 kv. Moskva, Gos. energ. izd-vo, 1957. 70 p. (MIRA 11:4)

(Electric power distribution)

APPROVED FOR RELEASE: 09/17/2001 CIA-RDP86-00513R000722010013-5"

"APPROVED FOR RELEASE: 09/17/2001 CIA-RDP86-00513R000722010013-5

KHEYFITS, M.E., inzhener, redaktor; DEMKOV, Ye.D., redaktor; FRIDKIN, A.M., tekhnicheskiy redaktor.

[New developments in designing electric elements for hydroelectric power stations; papers given at a conference on design and operation] Novoe v proektirovanii elektricheskoi chasti gidroelektrostantsii; materialy soveshchaniia. Pod obshchei red.M.E.Kheifitsa. Moskva, Gos.energ.izd-vo, 1957. 222 p. (MIRA 10:11)

1. Soveshchaniye po proyektirovaniyu i ekspluatatsii. Moscow, 1956. (Hydroelectric power stations)

APPROVED FOR RELEASE: 09/17/2001 CIA-RDP86-00513R000722010013-5"

"APPROVED FOR RELEASE: 09/17/2001 CIA-RDP86-00513R000722010013-5

LISOVSKIY, G.S., inzh.; USPENSKIY, B.S., dots.; KHEYFITS, M.E., inzh.; SYROYEZHIN, M.I., inzh.

On the article "Arrangement of the main step-up transformers in hydro-electric power stations." Elek. sta. 30 no.3:91-93 Mr '59. (MIRA 12:5)

(Electric transformers)

APPROVED FOR RELEASE: 09/17/2001 CIA-RDP86-00513R000722010013-5"

"APPROVED FOR RELEASE: 09/17/2001 CIA-RDP86-00513R000722010013-5

UMANSKIY, Boris Zinov'yevich; POKH, Il'ya Yefimovich; KHEYFITS, M.E., inzh., red.; LARIONOV, G.Ye., tekhn. red.

[Electric power supply for the construction of large hydroelectric power plants] Elektrosnabzhenie stroitel'stva krupnykh gidroelektrostantsii. Pod red. M.E.Kheifitsa. Moskva, Gos. energ. izd-vo, 1961. 271 p. (MIRA 14:9)
(Hydroelectric power stations—Design and construction)
(Electric power distribution)

APPROVED FOR RELEASE: 09/17/2001 CIA-RDP86-00513R000722010013-5"

"APPROVED FOR RELEASE: 09/17/2001 CIA-RDP86-00513R000722010013-5

KAKUYEVITSKI, L.I.; KRUPITSKIY, A.Yu.; SAKOV, A.D.; KHEYFITS, M.E., inzh., red.; NIKOLAYEVA, M.I., red.; BORUNOV, N.I., tekhn. red.

[Manual on relays used in electric protection and automatic control systems] Spravochnik rele zashchity i avtomatiki. Pod red. M.E.Kheifitsa. Moskva, Gosenergoizdat, 1962. 190 p. (MIRA 15:7)

(Electric relays--Handbooks, manuals, etc.)

APPROVED FOR RELEASE: 09/17/2001 CIA-RDP86-00513R000722010013-5"

"APPROVED FOR RELEASE: 09/17/2001 CIA-RDP86-00513R000722010013-5

GREYSUKH, M.V.; YERMILOV, A.A.; ZALESSKIY, Yu.Ye.; KAZYMOV, A.A.; KATSEVICH, L.S.; KIRPA, I.I.; KIREYEV, M.I.; KNYAZEVSKIY, B.A.; KOFMAN, K.D.; KRZHAVANIK, L.V.; KUZNETSOV, P.V.; MOROZOV, K.S.; RAKOVICH, I.I.; RYABOV, M.S.; SVENCHANSKIY, A.D.; SOKOLOV, M.M.; SYCHEV, L.I.; TVERDIN, L.M.; KHEYFITS, M.E.; SHULIMOV, Ye.V.; EPSHTEYN, L.M.; SHCHEGOL'KOV, Ye.I.; TSAPENKO, Ye.F.; FEDOROV, A.A., glav. red.; SERBINOVSKIY, G.V., red.; BOL'SHAM, Ya.M., red.; BRANDENBURGSKAYA, E.Ya., red.; TVERDIN, L.M., red.; FRIDKIN, L.M., tekhn. red.

[Handbook for power engineers of industrial enterprises in four volumes] Spravochnik energetika promyshlennykh predpriiatii v chetyrekh tomakh. Moskva, Gosenergoizdat. Vol.2. [Electric-power supply (conclusion), use of electric power and electrical equipment in some branches of industry] Elektrosnabzhenie (okonchanie), priemniki elektroenergii i elektrooborudovanie nekotorykh otraslei promyshlennosti. Pod obshchei red. A.A.Fedorova (glav. red.), G.V.Serbinovskogo i IA.M.Bol'shama. 1963. 880 p. (MIRA 16:7)

(Power engineering—Handbooks, manuals, etc.)
(Electric power distribution)

APPROVED FOR RELEASE: 09/17/2001 CIA-RDP86-00513R000722010013-5"

"APPROVED FOR RELEASE: 09/17/2001 CIA-RDP86-00513R000722010013-5

DVOSKIN, Lazar' Il'ich; USPENSKIY, B.S., dots., retsenzent; KHEYFITS, M.E., inzh., red.; LARIONOV, G.Ye., tekhn. red.

[Schematics of electrical networks connecting large thermal electric power plants] Skhemy elektricheskikh soedinenii moshchnykh teplovykh elektrostantsiiu. Moskva, Gosenergoizdat, 1963. 207 p. (MIRA 17:3)

APPROVED FOR RELEASE: 09/17/2001 CIA-RDP86-00513R000722010013-5"

"APPROVED FOR RELEASE: 09/17/2001 CIA-RDP86-00513R000722010013-5

LISOVSKIY, Grigoriy Semenovich; UMANSKIY, Boris Zinov'yevich; USPENSKIY, Boris Sergeyevich; KHEYFITS, Mikhail Emmanuilovich; SHUMILOVSKAYA, I.P., red.

[Electrical section of hydroelectric power stations; principal schematics of electrical connections] Elektricheskaia chast' gidroelektrostantsii; glavnye skhemy elektricheskikh soedinenii. Moskva, Energiia, 1965. 367 p. (MIRA 18:7)

APPROVED FOR RELEASE: 09/17/2001 CIA-RDP86-00513R000722010013-5"

"APPROVED FOR RELEASE: 09/17/2001 CIA-RDP86-00513R000722010013-5

USPENSKIY, B.S., inzh.; KHEYFITS, M.E., inzh.

Some new principles of the construction of the main diagrams of electrical connections of hydroelectric power stations. Elek. sta. 36 no.1:43-49 Ja '65. (MIRA 18:3)

APPROVED FOR RELEASE: 09/17/2001 CIA-RDP86-00513R000722010013-5"

"APPROVED FOR RELEASE: 09/17/2001 CIA-RDP86-00513R000722010013-5

L 9828-66 EWT(1)/EWA(h)

ACC NR: AP6003970 SOURCE CODE: UR/0104/65/000/005/0093/0093

AUTHOR: Sarkisov, M. A.; Rokotyan, S. S.; Uspenskiy, B. S.; Sharov, A. N.; Zhulin, I. V.; Fedoseyev, A. M.; Koroley, M. A.; Kheyfits, M. E.; Yermolenko, V. M.; Petrov, S. Ya.; Azar'yev, D. I.; Krikunchik, A. B.; Polyakov, I. P.; Sazonov, V. I.; Khvoshchinskaya, Z. G.; Kartsev, V. L.; Smelyanskaya, B. Ya.; Kozhin, A. N.; Losev, S. B.; Dorodnova, T. N.; Rubinchik, V. A.; Smirnov, E. P.; Rudman, A. A.

ORG: none

50
B

TITLE: Abram Borisovich Chernin

SOURCE: Elektricheskiye stantsii, no. 5, 1965, 93

TOPIC TAGS: electric engineering, electric engineering personnel

ABSTRACT: An engineer since 1929, A. B. Chernin has worked for years in developing new techniques and equipment for relay protection of electric power systems. In this 60th birthday tribute, he is credited with leading the group which produced the directives on relay protection, contributing to the development of a method for calculating transient processes in long distance 400-500 kv power transmission lines and with aiding in planning of the electric portions of power stations, substations and power systems. The results of his engineering and scientific work have been published 46 times, he is a doctor of technical sciences (since 1963), and has taught for 30 years at the Moscow Power Institute. Orig. art. has: 1 figure. [JPRS]

SUB CODE: 09 / SUBM DATE: none

HW

Card 1/1

APPROVED FOR RELEASE: 09/17/2001 CIA-RDP86-00513R000722010013-5"

"APPROVED FOR RELEASE: 09/17/2001 CIA-RDP86-00513R000722010013-5

ACC NR: AP7007595 SOURCE CODE: UR/0104/66/000/008/0095/0096

26

AUTHOR: Chuprakov, N. M.; Borovoy, A. A.; Postnikov, N. A.; Malychev, A. A.; Magidson, E. M.; Sin'chugov, F. I.; Zeylidzon, Ye. D.; Barchaninov, G. S.; Yermolenko, V. M.; Vasil'yev, A. A.; Sokolov, N. I.; Ul'yanov, A. S.; Fedoseyev, A. M.; Sarkisov, M. A.; Rokotyan, S. S.; Azar'yev, D. I.; Arson, G. S.; Dubinskiy, L. A.; Zhulin, I. V.; Kolpakova, A. I.; Antoshin, N. N. Krikunchik, A. B.; Kuchkin, M. D.; Preobrazhenskiy, N. Ye.; Rout, M. A.; Kheyfits, M. E.; Sharov, A. N.; Yakub, Yu. A.; Gorbunov, N. I.; Shurmukhin, V. A.; Beschinskiy, A. A.
ORG: none

TITLE: Boris Sergeyevich Uspenskiy (on his 60th birthday)

SOURCE: Elektricheskiye stantsii, no. 8, 1966, 95-96
TOPIC TAGS: hydroelectric power plant, electric engineering personnel.
SUB CODE: 10

ABSTRACT: B. S. Uspenskiy was born in June 1906. He graduated from the State Electric Machine Building Institute in 1928 as an electric installation engineer. He worked in the State Electro-Technical Trust for four years, then in the All-Union ElectroTechnical Union, where he planned power construction units. Plans which he made up at that time for the electrical portion of electrical stations and sub-stations are still being used. He was invovled in planning and installation of the electrical portion of hydro-electric power stations and powerful pumping stations in the Moscow-Volga Canal. During the war, he was in charge in installation of the Krasnogroskaya Heat and Electric Power Station, the planning of the Urals Hydro-Electric Power Station and other projects. He

Card 1/2

0928 1534

APPROVED FOR RELEASE: 09/17/2001 CIA-RDP86-00513R000722010013-5"

"APPROVED FOR RELEASE: 09/17/2001 CIA-RDP86-00513R000722010013-5

LITVINOV, Vasiliy Semenovich; KHEYFITS, M.E., insh., red.; BASHILOV, V.I., red.; LEBEDEVA, L.V., tekhn.red.

[Electric power supply to the construction operations of the Kakhovka Hydroelectric Power Station] Elektrosnabzhenie stroitel'stva Kakhovskoi gidroelektrostantsii. Moskva, Orgenergostroi, 1960. 57 p. (MIRA 14:2)
(Kakhovka Hydroelectric Power Station)
(Electricity in building)

APPROVED FOR RELEASE: 09/17/2001 CIA-RDP86-00513R000722010013-5"

"APPROVED FOR RELEASE: 09/17/2001 CIA-RDP86-00513R000722010013-5

1. USPENSKIY, B.S., KHEYFITS, M.M. Engs.

2. USSR (600)

4. Hydroelectric Power Stations

7. Layout of the electrical part of automatic hydroelectric power stations. Gidr. stroi. No. 11 1952.

9. Monthly List of Russian Accessions, Library of Congress, APRIL 1953, Uncl.

APPROVED FOR RELEASE: 09/17/2001 CIA-RDP86-00513R000722010013-5"

"APPROVED FOR RELEASE: 09/17/2001 CIA-RDP86-00513R000722010013-5

KOMAROV, S.A., inzhener; RAYGORODSKIY, I.M., inzhener; KHEYFITS, M.M., inzhener.

Timber economy for 3-10 kilovolt networks. Elek.sta. 24 no.4:48-50 Ap '53. (MLRA 6:5)
(Electric lines--Poles)

APPROVED FOR RELEASE: 09/17/2001 CIA-RDP86-00513R000722010013-5"

"APPROVED FOR RELEASE: 09/17/2001 CIA-RDP86-00513R000722010013-5

KHEYFITS, M.P.

Unusual case of giant hydronephrosis. Urologiia 24 no.2:61 Mr-Ap '59. (MIRA 12:12)

1. Iz gospital'noy khirurgicheskoy kliniki (zav. - prof. G.N. Luk'yanov) na baze Krasnodarskoy krayevoy klinicheskoy bol'nitsy.
(HYDRONEPHROSIS, case reports, giant case (Rus))

APPROVED FOR RELEASE: 09/17/2001 CIA-RDP86-00513R000722010013-5"

"APPROVED FOR RELEASE: 09/17/2001 CIA-RDP86-00513R000722010013-5

KHEYFITS, S. Ya., Engineer

"Improvement of Sanitary Conditions for Work in Mines." Sub 20 Mar 47, Moscow Mining Inst imeni I. V. Stalin

Dissertations presented for degrees in science and engineering in Moscow in 1947

SO: Sum No. 457, 18 Apr 55

APPROVED FOR RELEASE: 09/17/2001 CIA-RDP86-00513R000722010013-5"

"APPROVED FOR RELEASE: 09/17/2001 CIA-RDP86-00513R000722010013-5

KHEYFITS, S.YA.

SPIVAKOVSKIY, A.O., professor, doktor tekhnicheskikh nauk; VASIL'EV, N.V. kandidat tekhnicheskikh nauk, redaktor; KHEYFITS, S.Ya., redaktor; BOLDYREVA, Z.A., tekhnicheskiy redaktor

[Mine transportation] Rudnichnyi transport. Moskva, Ugletekhizdat, 1949. 475 p. [Microfilm] (MLRA 8:9)

1. Chlen-korrespondent Akademii nauk SSSR(for Spivakovskiy)

(Mine haulage)

APPROVED FOR RELEASE: 09/17/2001 CIA-RDP86-00513R000722010013-5"

"APPROVED FOR RELEASE: 09/17/2001 CIA-RDP86-00513R000722010013-5

SKOCHINSKIY, A.A.; OGIYEVSKIY, V.M.; KHEYFITS, S.Ya., otvetstvennyy redaktor; GRISHAYENKO, M.I., redaktor; ANDREYEV, G.G., tekhnicheskiy redaktor; ALADOVA, Ye.I., tekhnicheskiy redaktor

[Mine fires] Rudnichnye pozhary. Izd. 2., perer. i dop. Moskva, Ugletekhizdat, 1954. 387 p. (MLRA 7:10)
(Mine fires)

APPROVED FOR RELEASE: 09/17/2001 CIA-RDP86-00513R000722010013-5"

"APPROVED FOR RELEASE: 09/17/2001 CIA-RDP86-00513R000722010013-5

KHEYFITS, S.Ya., dotsent; KLIMANOV, A.D., kandidat tekhnicheskikh nauk.

Dust formation in coal preparation plants and characteristics of dust control methods. Nauch. trudy MGI no.16:89-99 '55 [cover '56].
(Coal preparation) (Dust--Removal) (MLRA 10:4)

APPROVED FOR RELEASE: 09/17/2001 CIA-RDP86-00513R000722010013-5"

"APPROVED FOR RELEASE: 09/17/2001 CIA-RDP86-00513R000722010013-5

KHEYFITS, Semen Yakovlevich; PRAVDENKO, D.Ya., dotsent, retsenzent; BABURIN, I.A., redaktor; GRISHAYENKO, M.I., redaktor; ALADOVA, Ye.I., tekhnicheskiy redaktor; ANDREYEV, G.G., tekhnicheskiy redaktor.

[Safety engineering in coal mines and open pits] Tekhnika bezopasnosti v ugol'nykh shakhtakh i kar'erakh. Izd. 2-oe, perer. i dop. Moskva, Ugletekhizdat, 1955. 375 p. [Microfilm] (Coal mines and mining--Safety measures)(MLRA 9:1)

APPROVED FOR RELEASE: 09/17/2001 CIA-RDP86-00513R000722010013-5"

"APPROVED FOR RELEASE: 09/17/2001 CIA-RDP86-00513R000722010013-5

PRAVDENKO, Dmitriy Yakovlevich; KHEYFITS, S.Ya., redakter; OKHRIMENKO, V.A., redakter; ALADOVA, Ye.I., tekhnicheskiy redakter.

[Mine ventilation, mine lighting, fighting mine fires, mine rescue work] Rudnichnaia ventiliatsiia, osveshchenie, bor'ba s pozharami, gornospasatel'noe dele. Izd. 2-oe, perer. i dop. Moskva, Ugletekhizdat, 1955. 407 p. (MLRA 9:5)
(Mine ventilation)(Mine lighting)(Mine fires)(Mine rescue work)

APPROVED FOR RELEASE: 09/17/2001 CIA-RDP86-00513R000722010013-5"

"APPROVED FOR RELEASE: 09/17/2001 CIA-RDP86-00513R000722010013-5

KHEYFETS, S.YA.

ANDREYEV, A.B.; ANTONOV, A.I.; ARAPOV, P.P., BARMASH, A.I., BEDNYAKOVA, A.B.; BEMIN, G.S.; BERESNEVICH, V.V.; BERNSHTEYN, S.A.; BITYUTSKOV, V.I.; BLYUMENBERG, V.V.; BONCH-BRUYEVICH, M.D.; BORMOTOV, A.D.; BULGAKOV, N.I.; VEKSLER, B.A.; GAVRILENKO, I.V.; GENDLER, Ye.S., [deceased]; GERLIVANOV, N.A., [deceased]; GIBSHMAN, Ye.Ye.; GOLDOVSKIY, Ye.M.; GORBUNOV, P.P.; GORYAINOV, F.A.; GRINBERG, B.G.; GRYUNER, V.S.; DANOVSKIY, N.F.; DZEVUL'SKIY, V.M., [deceased]; DREMAYLO, P.G.; DYBETS, S.G.; D'YACHENKO, P.F.; DYURNBAUM, N.S., [deceased]; YEGORCHENKO, B.F. [deceased]; YEL'YASHKEVICH, S.A.; ZHEREBOV, L.P.; ZAVEL'SKIY, A.S.: ZAVEL'SKIY, F.S.; IVANOVSKIY, S.R.; ITKIN, I.M.; KAZHDAN, A.Ya.; KAZHINSKIY, B.B.; KAPLINSKIY, S.V.: KASATKIN, F.S.; KATSAUROV, I.N.; KITAYGORODSKIY, I.I.; KOLESNIKOV, I.F.; KOLOSOV, V.A.; KOMAROV, N.S.; KOTOV, B.I.; LINDE, V.V.; LEBEDEV, N.V.; LEVITSKIY, N.I.; LOKSHIN, Ya.Yu; LUTTSAU, V.K.; MANNERBERGER, A.A.; MIKHAYLOV, V.A.; MIKHAYLOV, N.M.; MURAV'YEV, I.M.; NYDEL'MAN, G.E.; PAVLYSHKOV, L.S.; POLUYANOV, V.A.; POLYAKOV, Ye.S.; POPOV, V.V.; POPOV, N.I.; RAKHLIN, I.Ye., RZHEVSKIY, V.V.; ROZENBERG, G.V.; ROZENTRETER, B.A.; ROKOTYAN, Ye.S.; RUKAVISHNIKOV, V.I.; RUTOVSKIY, B.N. [deceased]; RYVKIN, P.M.; SMIRNOV, A.P.; STEPANOV, G.Yu, STEPANOV, Yu.A.; TARASOV, L.Ya.; TOKAREV, L.I.; USPASSKIY, P.P.; FEDOROV, A.V.; FERE, N.E.; FRENKEL', N.Z.; KHEYFETS, S.Ya.; KHLOPIN, M.I.; KHODOT, V.V.; SHAMSHUR, V.I.; SHAPIRO, A.Ye.; SHATSOV, N.I.; SHISHKINA, N.N.; SHOR, E.R.; SHPICHENETSKIY, Ye.S.; SHPRINK, B.E.; SHTERLING, S.Z.; SHUTYY, L.R.; SHUKHGAL'TER, L. Ya.; ERVAYS, A.V.;

(Continued on next card)

APPROVED FOR RELEASE: 09/17/2001 CIA-RDP86-00513R000722010013-5"

"APPROVED FOR RELEASE: 09/17/2001 CIA-RDP86-00513R000722010013-5

ANDREYEV, A.B. (continued) .... Card 2.

YAKOVLEV, A.V.; ANDREYEV, Ye.S., retsenzent, redaktor; BENKEN-GEYM, B.M., retsenzent, redaktor; BERMAN, L.D., retsenzent, redaktor; BOLTINSKIY, V.N., retsenzent, redaktor; BONCH-BRUYEVICH, V.L., retsenzent, redaktor; VELLER, M.A., retsenzent, redaktor; VINOGRADOV, A.V., retsenzent, redaktor; GUDTSOV, N.T., retsenzent, redaktor; DEGTYAREV, I.L., retsenzent, redaktor; DEM'YANYUK, F.S., retsenzent; redaktor; DOBROSMYSLOV, I.N., retsenzent, redaktor; YELANCHIK, G.M. retsenzent, redaktor; ZHEMOCHKIN, D.N., retsenzent, redaktor; SHURAVCHENKO, A.N., retsenzent, redaktor; ZLODEYEV, G.A., retsenzent, redaktor; KAPLUNOV, R.P., retsenzent, redaktor; KUSAKOV, M.M., retsenzent, redaktor; LEVINSON, L.Ye., [deceased] retsenzent, redaktor; MALOV, N.N., retsenzent, redaktor; MARKUS, V.A. retsenzent, redaktor; METELITSYN, I.I., retsenzent, redaktor; MIKHAYLOV, S.M., retsenzent; redaktor; OLIVETSKIY, B.A., retsenzent, redaktor; PAVLOV, B.A., retsenzent, redaktor; PANYUKOV, N.P., retsenzent, redaktor; PLAKSIN, I.N., retsenzent, redaktor; RAKOV, K.A. retsenzent, redaktor; RZHAVINSKIY, V.V., retsenzent, redaktor; RINBERG, A.M., retsenzent; redaktor; ROGOVIN, N. Ye., retsenzent, redaktor; RUDENKO, K.G., retsenzent, redaktor; RUTOVSKIY, B.N., [deceased] retsenzent, redaktor; RYZHOV, P.A., retsenzent, redaktor; SANDOMIRSKIY, V.B., retsenzent, redaktor; SKRAMTAYEV, B.G., retsenzent, redaktor; SOKOV, V.S., retsenzent, redaktor; SOKOLOV, N.S., retsenzent, redaktor; SPIVAKOVSKIY, A.O., retsenzent, redaktor; STRAMENTOV, A.Ye., retsenzent, redaktor; STRELETSKIY, N.S., retsenzent, redaktor;

(Continued on next card)

APPROVED FOR RELEASE: 09/17/2001 CIA-RDP86-00513R000722010013-5"

"APPROVED FOR RELEASE: 09/17/2001 CIA-RDP86-00513R000722010013-5

ANDREYEV, A.V.,(continued) .... Card 3.

TRET'YAKOV, A.P., retsenzent, redaktor; FAYERMAN, Ye.M., retsenzent, redaktor; KHACHATYROV, T.S., retsenzent, redaktor; CHERNOV, H.V., retsenzent, redaktor; SHERGIN, A.P., retsenzent, redaktor; SHESTOPAL, V.M., retsenzent, redaktor; SHESHKO, Ye.F., retsenzent, redaktor; SHCHAPOV, N.M., retsenzent, redaktor; YAKOBSON, M.O., retsenzent, redaktor; STEPANOV, Yu.A., Professor, redaktor; DEM'YANYUK, F.S., professor, redaktor; ZNAMENSKIY, A.A., inzhener, redaktor; PLAKSIN, I.N., redaktor; RUTOVSKIY, B.N. [deceased] doktor khimicheskikh nauk, professor, redaktor; SHUKHGAL'TER, L. Ya, kandidat tekhnicheskikh nauk, dotsent, redaktor; BRESTINA, B.S., redaktor; ZNAMENSKIY, A.A., redaktor.

(Continued on next card)

APPROVED FOR RELEASE: 09/17/2001 CIA-RDP86-00513R000722010013-5"

"APPROVED FOR RELEASE: 09/17/2001 CIA-RDP86-00513R000722010013-5

ANDREYEV, A.V. (continued) .... Card 4.

[Concise polytechnical dictionary] Kratkii politekhnicheskii slovar'. Redaktsionnyi sovet; IU.A.Stepanov i dr. Moskva, Gos. izd-vo tekhniko-teoret. lit-ry, 1955. 1136 p. (MLRA 8:12)

1. Chlen-korrespondent AN SSSR (for Plaksin)
(Technology--Dictionaries)

APPROVED FOR RELEASE: 09/17/2001 CIA-RDP86-00513R000722010013-5"

"APPROVED FOR RELEASE: 09/17/2001 CIA-RDP86-00513R000722010013-5

KHEYFITS, SEMEN YAKOVLEVICH

ZAYTSEV, Appolinariy Pavlovich; KHEYFITS, Semen YAkovlevich; DMITRIYEV, L.N., redaktor izdatel'stva; ALADOV, Ye.I., tekhnicheskiy redaktor.

[Safety regulations in foreign coal mines] Pravila bezopasnosti na zarubezhnykh ugolnykh shakhtakh. Moskva, Ugletekhizdat, 1956. 209 p. (MLRA 10:4)

(Coal mines and mining--Safety measures)

APPROVED FOR RELEASE: 09/17/2001 CIA-RDP86-00513R000722010013-5"

"APPROVED FOR RELEASE: 09/17/2001 CIA-RDP86-00513R000722010013-5

KHEYFITS, S.YA.

TORSKIY, Pavel Nikolayevich; RABICHEV, Aleksandr Ivanovich; CHEBOTAREV, Konstantin Aleksandrovich; KHEYFITS, S.Ya., otvetstvennyy redaktor; TYUTYUNIKOVA, N.A., redaktor izdatel'stva; NADEINSKAYA, A.A., tekhnicheskiy redaktor.

[Elimination of dust from coal mines] Obespylivanie ugol'nykh shakht. Moskva, Ugletekhizdat, 1956. 298 p. (MLRA 10:4)
(Coal mines and mining--Safety measures)
(Mine dusts)

APPROVED FOR RELEASE: 09/17/2001 CIA-RDP86-00513R000722010013-5"

"APPROVED FOR RELEASE: 09/17/2001 CIA-RDP86-00513R000722010013-5

KHEYFITS, S.YA.

ZAYTSEV, A.P.; KHEYFITS, S.Ya.

Influence of the speed of air flow on the dust content in mine atmospheres. Ugol' 32 no.9:31-33 S '57. (MIRA 10:10)
(Mine ventilation)
(Mine dusts)

APPROVED FOR RELEASE: 09/17/2001 CIA-RDP86-00513R000722010013-5"

"APPROVED FOR RELEASE: 09/17/2001 CIA-RDP86-00513R000722010013-5

KHEYFITS, S.Ya

ZAYTSEV, Appolinariy Pavlovich, KHEYFITS, S.Ya., otvetstvennyy redaktor; GRISHAYENKO, M.I., redaktor izdatel'stva.

[Problems of coal mine safety] Voprosy tekhniki bezopasnosti v ugol'nykh shakhtakh. [Moskva] Ugletekhizdat, 1957. 62 p. (MIRA 10:9)

(Coal mines and mining--Safety measures)

APPROVED FOR RELEASE: 09/17/2001 CIA-RDP86-00513R000722010013-5"

"APPROVED FOR RELEASE: 09/17/2001 CIA-RDP86-00513R000722010013-5

KHEYFITS, S.Ya.; BURCHAKOV, A.S.; GRISHAYENKO, M.I., otvetstvennyy red.; TYUTYUNNIK, N.A., red.izd-va; IL'INSKAYA, G.M., tekhn.red.

[Reducing dust in coal mine drifts] Snizhenie zapylennosti vozdukha v lavakh ugol'nykh shakht. Moskva, Ugletekhizdat, 1958. 99 p. (Mine dusts) (MIRA 11:5)

APPROVED FOR RELEASE: 09/17/2001 CIA-RDP86-00513R000722010013-5"

"APPROVED FOR RELEASE: 09/17/2001 CIA-RDP86-00513R000722010013-5

ABRAMOV, F.A., prof., doktor tekhn.nauk; BALTAYTIS, V.Ya., inzh.; BARON, L.I., doktor tekhn.nauk; BATALIN, S.A., dotsent, kand. tekhn.nauk; BYKOV, L.N., prof., doktor tekhn.nauk; VESELOVSKIY, V.S., prof., doktor tekhn.nauk; VLADIMIRSKIY, V.V., kand.tekhn. nauk [deceased]; VORONIN, V.N., doktor tekhn.nauk [deceased]; VORONINA, L.D., kand.tekhn.nauk; VOROPAYEV, A.F., prof.,dokt.tekhn. nauk; ZHUKOV, G.I.; KOMAROV, V.B., prof., doktor tekhn.nauk; KRICHEVSKIY, R.M., kand.tekhn.nauk; KSENOFONTOVA, A.I., dotsent, kand.tekhn.nauk; LIDIN, G.D., doktor tekhn.nauk; MILETICH, A.F., dotsent, kand.tekhn.nauk; MUSTEL', P.I., dotsent, kand.tekhn. nauk; NOVIKOV, K.P., kand.tekhn.nauk; OGIYEVSKIY, V.M., prof., doktor tekhn.nauk [deceased]; POLESIN, Ya.L., inzh.; RIPP, M.G., dotsent, kand.tekhn.nauk; SOBOLEV, G.G., inzh.; SOLOV'YEV, P.M., inzh.; SUKHAREVSKIY, V.M., kand.tekhn.nauk; KHEYFITS, S.Ya.,dotsent,

(Continued on next card)

APPROVED FOR RELEASE: 09/17/2001 CIA-RDP86-00513R000722010013-5"

"APPROVED FOR RELEASE: 09/17/2001 CIA-RDP86-00513R000722010013-5

ABRAMOV, F.A.---(continued) Card 2.
kand.tekhn.nauk; KHODOT, V.V., kand.tekhn.nauk; SHCHERBAN', A.N.; TERPIGOREV, A.M., glavnyy red.; SKOCHINSKIY, A.A., otv. red.toma; ZAYTSEV, A.P., zam. otv.red.toma; BOBROV, I.V., red. toma; KOMAROV, V.B., red.toma; SIRYACHENKO, F.N., red.toma; VARZIN, A.V., kand.tekhn.nauk, red.toma; KLIMANOV, A.D., dots.,kand. tekhn.nauk, red.toma; KRIVONOGOV, K.K., inzh., red.toma; NEUYMIN, I.N., inzh., red.toma; TITOV, N.G., doktor tekhn.nauk, red.toma; CHIZHOV, B.D., kand.tekhn.nauk, red.toma; GNEDIN, V.Ye., red. izd-va; NIKOLAYEV, V.F., red.izd-va; BASHEVA, T.A., red.izd-va; PROZOROVSKAYA, V.L., tekhn.red.

[Mining; an encyclopedic dictionary] Gornoe delo; entsiklopedicheskii spravochnik. Glav.red. A.M.Terpigorev. Chleny glav. red.: A.I.Barabanov i dr. Moskva, Gos.nauchno-tekhn.izd-vo lit-ry po ugol'noi promyshl. Vol.6. [Mine atmosphere and ventilation; controlling dust, gases, and fires; mine rescue work] Rudnichnaia atmosfera i ventiliatsiia; Bor'ba s pyl'iu, gazami i pozharami; Gornospasatel'noe delo. Redkollegiia toma: A.A.Skochinskii i dr. 1959. 375 p. (MIRA 12:6)

1. Chlen-korrespondent AN USSR (for Shcherban').
(Mine ventilation) (Mine rescue work)

APPROVED FOR RELEASE: 09/17/2001 CIA-RDP86-00513R000722010013-5"

"APPROVED FOR RELEASE: 09/17/2001 CIA-RDP86-00513R000722010013-5

BYKOV, L.N., doktor tekhn. nauk, prof.; KSENOFONTOVA, A.I., prof.; KLIMANOV, A.D., kand. tekhn. nauk; KRICHEVSKIY, R.M., kand. tekhn. nauk; PREOBRAZHENSKAYA, Ye.I., inzh.; RASKIN, I.A., kand. tekhn. nauk; USHAKOV, K.Z., kand. tekhn. nauk; KHAREV, A.A., kand. tekhn. nauk; KHEYFITS, S.Ya., kand. tekhn. nauk; ZAKHAROV, M.I., red. izd-va; GIL'MAN, S.E., red. izd-va; MAKSIMOVA, V.V., tekhn. red.; SHKLYAR, S.Ya., tekhn. red.

[Handbook on mine ventilation] Spravochnik po rudnichnoi ventiliatsii. Pod red. A.I.Ksenofontovoi. Moskva, Gosgortekhizdat, 1962. 691 p. (MIRA 15:6)

(Mine ventilation--Handbooks, manuals, etc.)

APPROVED FOR RELEASE: 09/17/2001 CIA-RDP86-00513R000722010013-5"

"APPROVED FOR RELEASE: 09/17/2001 CIA-RDP86-00513R000722010013-5

KHEYFITS, Semen Yakovlevich

[Organization of work in industrial safety] Organizatsiia rabot po okhrane truda; uchebnoe posobie. Moskva, Mosk. in-t radioelektroniki i gornoi elektromekhaniki, 1964. 95 p. (MIRA 18:5)

APPROVED FOR RELEASE: 09/17/2001 CIA-RDP86-00513R000722010013-5"

"APPROVED FOR RELEASE: 09/17/2001 CIA-RDP86-00513R000722010013-5

KHEYFITS, V., nauchnyy sotrudnik

Buildings out of soil cement. Prom.koop. 13 no.3:12-13 Mr '59.
(MIRA 12:4)

1. Nauchno-issledovatel'skiy institut sel'skogo stritel'stva RSFSR, Moskva.

(Soil cement)

APPROVED FOR RELEASE: 09/17/2001 CIA-RDP86-00513R000722010013-5"

"APPROVED FOR RELEASE: 09/17/2001 CIA-RDP86-00513R000722010013-5

KHEYFITS, V., inzh.; DOLITSKIY, I., inzh.

Efficient soil mixers. Stroitel' no.2:23 F '60. (MIRA 13:5)

(Concrete) (Mixing machinery)

APPROVED FOR RELEASE: 09/17/2001 CIA-RDP86-00513R000722010013-5"

"APPROVED FOR RELEASE: 09/17/2001 CIA-RDP86-00513R000722010013-5

KHEYFITS, V.A., inzh.

Graph analysis method of determining optimum moisture. Sbor. nauch. soob. NIIsel'stroia no.3:61-65 '60. (MIRA 15:6)
(Soil cement) (Soil moisture)

APPROVED FOR RELEASE: 09/17/2001 CIA-RDP86-00513R000722010013-5"

"APPROVED FOR RELEASE: 09/17/2001 CIA-RDP86-00513R000722010013-5

VILENKINA, N.M.; KHEYFITS, V.Z.; SOKOLOVA, G.S., red.; SAYTANIDI, L.D., tekhn.red.

[Soil cement in rural construction] Gruntobeton v sel'skom stroitel'stve. Moskva, Izd-vo M-va sel'khoz.RSFSR, 1960. 30 p. (MIRA 13:11)

(Farm buildings) (Soil cement)

APPROVED FOR RELEASE: 09/17/2001 CIA-RDP86-00513R000722010013-5"

"APPROVED FOR RELEASE: 09/17/2001 CIA-RDP86-00513R000722010013-5

DOLITSKIY, I.I., kand.tekhn.nauk; KHEYFITS, V.Z., inzh.

New mixing machinery for soil concrete. Mekh.stroi. 17 no.5:18-22 My '60. (MIRA 13:7)
(Mixing machinery) (Concrete)

APPROVED FOR RELEASE: 09/17/2001 CIA-RDP86-00513R000722010013-5"

"APPROVED FOR RELEASE: 09/17/2001 CIA-RDP86-00513R000722010013-5

L 22728-66 EWT(1) GW

ACC NR: AP6002918 (N) SOURCE CODE: UR/0286/65/000/024/0082/0082

AUTHORS: Arst, G. A.; Kovalenko, V. F.; Kheyfits, V. Z.

ORG: none

TITLE: Device for determining the slope of underwater surfaces of hydrotechnical structures. Class 42, No. 171102 [announced by State Design Construction and Scientific Research Institute of Sea Transportation "Soyuzmorniiproyekt" (Gosudarstvennyy proyektno-konstruktorskiy i nauchno-issledovatel'skiy institut morskogo transporta "Soyuzmorniiproyekt")]

SOURCE: Byulleten' izobreteniy i tovarnykh znakov, no. 24, 1965, 82

TOPIC TAGS: attitude measuring device, goniometer, pendulum, rotor, transducer

ABSTRACT: This Author Certificate presents a device for determining the slope of underwater surfaces of hydrotechnical structures, which includes gravitational pendulums mounted inside a hermetically sealed body and attached to the rotor axes of angle of rotation transducers. To increase the measuring accuracy, the gravitational pendulums are mounted at 90° to each other on a supporting platform perpendicular to their planes of rotation. The inside of the hermetically sealed body is filled with a damping fluid.

SUB CODE: 13/ SUBM DATE: 09Apr64

Card 1/1 UDC: 532.291:626.022

APPROVED FOR RELEASE: 09/17/2001 CIA-RDP86-00513R000722010013-5"

"APPROVED FOR RELEASE: 09/17/2001 CIA-RDP86-00513R000722010013-5

ACC NR: AP6025641 (N) SOURCE CODE: UR/0413/66/000/013/0093/0093

INVENTOR: Arst, G. A.; Yevstigneyev, V. N.; Kheyfits, V. Z.

ORG: None

TITLE: A two-component dynamometer. Class 42, No. 183441 [announced by the State Design and Planning Scientific Research Institute of Marine Transportation (Gosudarstvennyy proyektno-konstruktorskiy i nauchno-issledovatel'skiy institut morskogo transporta)]

SOURCE: Izobreteniya, promyshlennyye obraztsy, tovarnyye znaki, no. 13, 1966, 93

TOPIC TAGS: torque measuring instrument, elastic deformation

ABSTRACT: This Author's Certificate introduces a two-component dynamometer containing a force sensing unit, support and elastic spring element equipped with deformation gauges. Design is simplified and temperature stability is improved by fastening the elastic element rigidly to the support at three equidistant points with connection to the force sensing unit at three other points separated from the first three by a given angle. The deformation gauges of the ealstic element are mounted in the two adjacent arches formed by the fastening points.

Card 1/2 UDC: 531.781.002.56

APPROVED FOR RELEASE: 09/17/2001 CIA-RDP86-00513R000722010013-5"

"APPROVED FOR RELEASE: 09/17/2001 CIA-RDP86-00513R000722010013-5

ACC NR: AP6025641

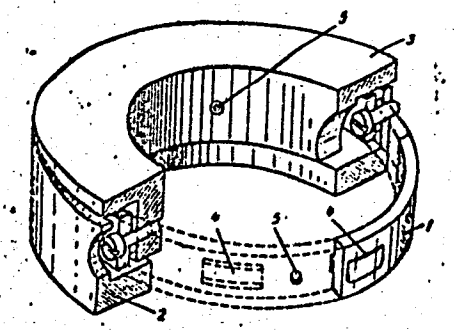

1—elastic element; 2—support; 3—force sensing unit; 4—deformation gauges; 5—fastening point

SUB CODE: 13, 14/ SUBM DATE: 27May65

Card 2/2

APPROVED FOR RELEASE: 09/17/2001 CIA-RDP86-00513R000722010013-5"

"APPROVED FOR RELEASE: 09/17/2001 CIA-RDP86-00513R000722010013-5

STRELETS, Kh.L.; TAYTS, A.Yu.; GULYANITSKIY, B.S.; PAZUKHIN, V.A., prof., doktor tekhn.nauk, retsenzent; KHEYFITS, Ya.M., kand.khim.nauk, retsenzent; VERIGIN, V.N., kand.tekhn.nauk, retsenzent; FISHER, A.Ya., kand.tekhn.nauk; retsenzent; TSENTER, Ya.A., kand.tekhn. nauk, retsenzent; MARKOV, G.S., inzh., retsenzent; KRIVORUCHENKO, V.V., inzh., retsenzent; CHERNOBROV, S.M., red.; ARKHANGEL'SKAYA, M.S., red.izd-va; KLEYNMAN, M.R., tekhn.red.

[Magnesium metallurgy] Metallurgiia magniia. Izd.2., perer. i dop. Moskva, Gos.nauchno-tekhn.izd-vo lit-ry po chernoi i tsvetnoi metallurgii, 1960. 479 p. (MIRA 13:5)
(Magnesium--Metallurgy)

APPROVED FOR RELEASE: 09/17/2001 CIA-RDP86-00513R000722010013-5"

"APPROVED FOR RELEASE: 09/17/2001 CIA-RDP86-00513R000722010013-5

KHEYFITS, Ya.Ye., inzhener.

Form for making large brick blocks. [Suggested by IA.E. Kheifits] Rats. i izobr. predl. v stroi. no.151:20-21 '56. (MLRA 10:3)
(Building blocks)

APPROVED FOR RELEASE: 09/17/2001 CIA-RDP86-00513R000722010013-5"

"APPROVED FOR RELEASE: 09/17/2001 CIA-RDP86-00513R000722010013-5

VAYNSHTEYN, B.Z., inzh.; GUDAVADZE, G.G., inzh.; KHEYFITS, Ye.B., inzh.

Design and calculation of the group controllers of the rolling stock. Vest. TSNII MPS 21 no.1:15-19 '62. (MIRA 15:2)

1. Nauchno-issledovatel'skiy elektrotekhnicheskiy institut, g. Tbilisi.

(Electric controllers)

APPROVED FOR RELEASE: 09/17/2001 CIA-RDP86-00513R000722010013-5"

"APPROVED FOR RELEASE: 09/17/2001 CIA-RDP86-00513R000722010013-5

VAYNSHTEYN, B.Z., inzh.; GUDAVADZE, G.G., inzh.; KHEYFITS, Ye.B., inzh.

Use of diaphram drives in electric traction machinery. Vest. elektroprom. 33 no.9:37-39 S '62. (MIRA 15:10)
(Electric railway motors--Equipment and supplies)

APPROVED FOR RELEASE: 09/17/2001 CIA-RDP86-00513R000722010013-5"

"APPROVED FOR RELEASE: 09/17/2001 CIA-RDP86-00513R000722010013-5

SHUMILO, I., inzhener; KHEYFMAN, G., inzhener.

Diesel stopping device for cases of oil pressure drop in the main distributor. Mor.flot.16 no.6:28-29 Je '56. (MIRA 9:9)
(Diesel engines) (Lubrication and lubricants)

APPROVED FOR RELEASE: 09/17/2001 CIA-RDP86-00513R000722010013-5"

"APPROVED FOR RELEASE: 09/17/2001 CIA-RDP86-00513R000722010013-5

KHEYFMAN, G.

SHUMILO, I., inzh.; KHEYFMAN, G., inzh.

Remote control of diesel engines. Mor.flot 17 no.8:18-19 Ag '57. (MIRA 10:10)

(Marine diesel engines)
(Remote control)

APPROVED FOR RELEASE: 09/17/2001 CIA-RDP86-00513R000722010013-5"

"APPROVED FOR RELEASE: 09/17/2001 CIA-RDP86-00513R000722010013-5

124-58-9-10127

Translation from: Referativnyy zhurnal, Mekhanika, 1958, Nr 9, p 102 (USSR)

AUTHORS: Kheyirov, Z. B., Guseynov, G. P.

TITLE: Solution of Some Problems of Unsteady Seepage in Aquifers of Variable Permeability (Resheniye nekotorykh zadach neustanovivshikhsya fil'tratsiy v plastakh peremennoy pronitsayemosti)

PERIODICAL: Uch. zap. Azerb. un-t, 1957, Nr 6, pp 31-48

ABSTRACT: A proposed solution of one-dimensional problems relative to the unsteady seepage in aquifers of variable permeability for specific cases of its variation with various boundary conditions. For a finite aquifer and under given pressures along the circle of influence and on the gallery and given permeabilities varying according to the law

$$k(x) = (a_1 x + b)^n$$

(where a_1, b, and n are constants), the authors succeed in obtaining an exact solution for the problem of constructing the pressure function. The problem is solved by means of the Fourier method, with subsequent use of the Duhamel theorem.

Card 1/2

APPROVED FOR RELEASE: 09/17/2001 CIA-RDP86-00513R000722010013-5"

"APPROVED FOR RELEASE: 09/17/2001 CIA-RDP86-00513R000722010013-5

124-58-9-10127

Solution of Some Problems of Unsteady Seepage in Aquifers (cont.)

The solution is obtained in the form of an infinite series. Also examined are several cases of other given boundary conditions with the same law governing the variations in permeability. At the conclusion of the paper the problem of determining the pressure function is found for the case of a linear variation of the permeability in an infinite aquifer and with a given yield at one end. The solution, in that case, is obtained in implicit form on the basis of the theory of similarity. It should be noted that for infinite aquifers a solution of the problem is possible for specific limitations relative to the variation in permeability. Thus, for example, formula (10.4) is valid only for $a_1>0, b>0$, and $n=1$ in formula (2). Otherwise the aquifer would die out, and the solution becomes senseless. There are no specific numerical examples; there are typographical errors. Bibliography: 7 references.

V. Yu. Kim

1. Water--Motion 2. Mathematics--Applications

Card 2/2

APPROVED FOR RELEASE: 09/17/2001 CIA-RDP86-00513R000722010013-5"

"APPROVED FOR RELEASE: 09/17/2001 CIA-RDP86-00513R000722010013-5

KHEYIROV, Z.B.

Flow of liquid toward incomplete wells in formations of varied permeability. Dokl.AN Azerb.SSR 15 no.12:1091-1095 '59. (MIRA 13:4)

1. Kafedra teoreticheskoy mekhaniki Azgosuniversiteta im.S.M. Kirova. Predstavleno akademikom AN AzerbSSR Z.I.Khalilovym.
(Oil reservoir engineering)

APPROVED FOR RELEASE: 09/17/2001 CIA-RDP86-00513R000722010013-5"

"APPROVED FOR RELEASE: 09/17/2001 CIA-RDP86-00513R000722010013-5

KHEYIROV, Z. B., CAND PHYS-MATH SCI, "CERTAIN PROBLEMS OF THE THEORY OF FILTRATION OF LIQUIDS IN ~~HETEROGENEOUS~~ heterogeneous MEDIA." BAKU, 1961. (COM FOR HIGHER AND SEC SPEC ED OF THE COUNCIL OF MINISTERS AZSSR, AZERBAYDZHAN STATE UNIV IM S. M. KIROV). (KL, 3-61, 205).

APPROVED FOR RELEASE: 09/17/2001 CIA-RDP86-00513R000722010013-5"

"APPROVED FOR RELEASE: 09/17/2001 CIA-RDP86-00513R000722010013-5

21(4) SOV/112-59-2-3388

Translation from: Referativnyy zhurnal. Elektrotekhnika, 1959, Nr 2, p 166 (USSR)

AUTHOR: Rozen, O., Sukhova, L., Kheyker, D., and Favorskaya, N.

TITLE: Using Radioactive Isotopes for Quality Control of Roll-Strip Materials (Primeneniye radioaktivnykh izotopov dlya kontrolya kachestva rulonnykh materialov)

PERIODICAL: Stroit. materialy, 1958, Nr 3, pp 34-35

ABSTRACT: VNIIAsbesttsement has used methods which permit continuously controlling average weight and thickness of a moving cardboard or pergamin strip and, consequently, its density or porosity. The weight has been determined by a contactless instrument designed by A. N. Slatinskiy (its scheme is presented) which depends on absorption of beta-rays by the material; Te^{204} is used as a source, an ionization chamber as a detector. The strip thickness is determined by an inductance primary element. The strip passes between two rolls, one of which is movable; the latter is displaced by thickness

Card 1/2

APPROVED FOR RELEASE: 09/17/2001 CIA-RDP86-00513R000722010013-5"

"APPROVED FOR RELEASE: 09/17/2001 CIA-RDP86-00513R000722010013-5

SOV/112-59-2-3388

Using Radioactive Isotopes for Quality Control of Roll-Strip Materials

variations and moves a primary-element core; this results in an output voltage across the primary element which linearly depends on the displacement value. The contactless weight-determining instrument is calibrated by cigarette-paper standards in the range of 220-970 g/m^2. A table giving the instrument checking data and a plot of porosity against water absorption in per cent are presented. This outfit for continuous material-porosity control is being adopted at the Leningrad "Kartontol'" and Odessa Roofing-Felt Factories. Two illustrations.

M.L.G.

Card 2/2

APPROVED FOR RELEASE: 09/17/2001 CIA-RDP86-00513R000722010013-5"

"APPROVED FOR RELEASE: 09/17/2001 CIA-RDP86-00513R000722010013-5

KHEYKER, D.M.

USSR.

5

548.736.3 : 537.312.62

11565. The structures of superconductors. V. X-ray crystallographic study of the structure of BiPd. D. M. KHEIKER, G. S. ZHDANOV AND N. N. ZHURAVLEV. *Zh. eksper. teor. Fiz.*, 25, No. 5 (11) 621–7 (1953) *In Russian.*

For Pt IV, see Abstr. 10664 (1954). Crystals of BiPd are orthorhombic with unit cell dimensions $a = 7{\cdot}203 \pm 0{\cdot}001$, $b = 8{\cdot}707 \pm 0{\cdot}002$ and $c = 10{\cdot}662 \pm 0{\cdot}001$ Å. The space group is Amal, $Z = 16$ and $\rho_{obs.} = 12{\cdot}5$ g/cm³. Geometrical analysis and the Patterson summations $P(0yz)$ and $P(x0\frac{1}{2})$ gave phases from which the Fourier projections $F(xy0)$ and $F(0yz)$ were calculated. The structure obtained confirmed the choice of space group. The uncentred structure of BiPd is like that of the centred TlI structure with distortion of the polyhedra. This appears to be the first non-centrosymmetric structure which has been observed to possess superconducting properties.

BB A. L. MACKAY

APPROVED FOR RELEASE: 09/17/2001 CIA-RDP86-00513R000722010013-5"

"APPROVED FOR RELEASE: 09/17/2001 CIA-RDP86-00513R000722010013-5

KHEYKER, D. M.

USSR

62

Simple method for calculating the coefficient of absorption for strongly absorbing samples in x-ray structure analysis. D. M. Kheiker (Moscow Mech. Inst.). *Zhur. Eksper. Teoret. Fiz.* 25, 750-61(1954).—The method suggested is based on the relatively small depth of penetration of the x-rays relative to the size of the sample. By using a BiPd crystal and Cu-K_α radiation, the coeff. of absorption is 3000 cm.$^{-1}$, a 95% absorption in 0.01 mm. F. H. R.

APPROVED FOR RELEASE: 09/17/2001 CIA-RDP86-00513R000722010013-5"

"APPROVED FOR RELEASE: 09/17/2001 CIA-RDP86-00513R000722010013-5

UMANSKIY M.M.; KHEYKER, D.M.

X-ray-goniometric methods for examination of crystals. Kristallografiia 1 no.4:446-459 '56. (MLRA 10:1)

1. Moskovskiy gosudarstvennyy universitet imeni M.V.Lomonosova, Vsesoyuznyy nauchno-issledovatel'skiy institut ASBESTTsEMENT Ministerstva promyshlennosti stroitel'nykh materialov.
(X-ray crystallography) (Goniometry)

APPROVED FOR RELEASE: 09/17/2001 CIA-RDP86-00513R000722010013-5"

"APPROVED FOR RELEASE: 09/17/2001 CIA-RDP86-00513R000722010013-5

KHEVKER D.M.

APPROVED FOR RELEASE: 09/17/2001 CIA-RDP86-00513R000722010013-5"

"APPROVED FOR RELEASE: 09/17/2001 CIA-RDP86-00513R000722010013-5

KHEYKER, D.M., Cand Phys Math Sci -- (diss) "~~Elaboration~~ Devising of diffractometrical methods for the solution of certain basic problems of X-ray structural analysis." Mos, 1958, 18 pp (Acad Sci USSR. Inst of Crystallography) 120 copies

List of author's works p 18 (14 titles) (KL, 23-58, 101)

APPROVED FOR RELEASE: 09/17/2001 CIA-RDP86-00513R000722010013-5"

"APPROVED FOR RELEASE: 09/17/2001 CIA-RDP86-00513R000722010013-5

SOV/70-3-1-7/26

AUTHORS: Umanskiy, M.M., Kheyker, D.M. and Volkov, O.S.

TITLE: Procedure for the Use of the URS-50I Apparatus as a Monocrystal Diffractometer (Priyemy ispol'zovaniya apparata URS-50I kak diffraktometra dlya monokristallov)

PERIODICAL: Kristallografiya, 1958, Vol 3, Nr 1, pp 43 - 48 (USSR)

ABSTRACT: The URS-50I apparatus was designed for X-ray structural analysis with ionisation-counter recording and was described by Ioffe in Ref 1. The present paper describes a method for converting this apparatus into a monocrystal diffractometer. A description is given of an attachment which can be used to determine the relative orientation of the crystal and the counter. A procedure is given for the adjustment of the crystal, determination of the parameters of the elementary cell and measurement of the integrated reflection intensity. The integrated reflection intensity is measured by a method analogous to that described by Cochran in Ref 4 and the counter resolving time is measured by an oscillographic method described by Klug et al in Ref 3. Geiger counters are used as detectors but it is intended to use scintillation and proportional counters.

Card1/2

APPROVED FOR RELEASE: 09/17/2001 CIA-RDP86-00513R000722010013-5"

"APPROVED FOR RELEASE: 09/17/2001 CIA-RDP86-00513R000722010013-5

SOV/70-3-1-7/26

Procedure for the Use of the URS-50I Apparatus as a Monocrystal Diffractometer

There are 5 figures, and 5 references, 2 of which are Soviet and 3 English.

ASSOCIATION: Moskovskiy gosudarstvennyy universitet im. M.V. Lomonosova (Moscow State University imeni M.V. Lomonosov)
VNIIASBESTTsEMENT

SUBMITTED: March 23, 1957

Card 2/2

APPROVED FOR RELEASE: 09/17/2001 CIA-RDP86-00513R000722010013-5"

"APPROVED FOR RELEASE: 09/17/2001 CIA-RDP86-00513R000722010013-5

ZEVIN, L.S.; KHEYKER, D.M.

Attachments to the UBS-50I apparatus for taking photographs at high and low temperatures. Zav. lab. 24 no.5:636-638 '58. (MIRA 11:6)

1. Vsesoyuznyy nauchno-issledovatel'skiy institut VNIIasbest-tsement.

(Radiography)

APPROVED FOR RELEASE: 09/17/2001 CIA-RDP86-00513R000722010013-5"

"APPROVED FOR RELEASE: 09/17/2001 CIA-RDP86-00513R000722010013-5

AUTHOR: Kheyker, D. M. SOV/32-24-9-17/53

TITLE: Phase Analysis by the Aid of the New X-Ray Spectrometer (Fazovyy analiz pri pomoshchi rentgenovskogo difraktometra)

PERIODICAL: Zavodskaya Laboratoriya, 1958, Vol 24, Nr 9, pp 1077-1083 (USSR)

ABSTRACT: In the paper under review the technique in quantitative and qualitative phase analyses by means of a Soviet spectrometer URS-50 I (Ref 2) is described. The qualitative phase analysis is based on the accurate determination of the positions of diffraction maxima and intensities. For this purpose, the apparatus must be adjusted, and the calculation of the displacement of the diffraction maxima position that may be brought about by geometric or other conditions on photographing in the spectrometer, must be determined precisely. The quantitative x-ray phase analysis is based on the function of the diffraction line intensity of the content of the phase concerned in the polyphase polycrystalline sample. The ionisation methods for the measurement of diffraction line intensities possess a number of properties that must be taken into consideration to ensure a high degree of accuracy. In the description of these details, a spectrometer attachment GUR-3

Card 1/2

APPROVED FOR RELEASE: 09/17/2001 CIA-RDP86-00513R000722010013-5"

"APPROVED FOR RELEASE: 09/17/2001 CIA-RDP86-00513R000722010013-5

SOV/32-24-9-17/53

Phase Analysis by the Aid of the New X-Ray Spectrometer

is described amongst others, which permits the rotation of a plane polycrystalline sample about its own plane. The rotation is effected by a motor SD-60. In order to increase the sensitivity of the phase analysis, a focusing, crystalline monochromator was used. The increase in the determination accuracy by using the monochromator could be proved by a radiograph of a quartz-fluorite mixture, taken in the RKD chamber of the apparatus URS-50 I, with or without a monochromator. By way of conclusion, several examples of the quantitative phase analysis are given.
There are 5 figures, 2 tables, and 9 references, 4 of which are Soviet.

ASSOCIATION: Institut VNIIasbestotsement (Institute VNIIasbestotsement)

Card 2/2

APPROVED FOR RELEASE: 09/17/2001 CIA-RDP86-00513R000722010013-5"

"APPROVED FOR RELEASE: 09/17/2001 CIA-RDP86-00513R000722010013-5

SOV/ 20-120-2-42/63

AUTHORS: Berkovich, T. M., Khcyker, D. M., Gracheva, O. I., Kupreyeva, N. I.

TITLE: On the Phase Composition of Products Formed in the Hydration of C_3S and β-C_2S (K voprosu o fazovom sostave produktov gidratatsii C_3S i β-C_2S)

PERIODICAL: Doklady Akademii Nauk SSSR, 1958, Vol. 120, Nr 2, pp.372-375 (USSR)

ABSTRACT: This phase composition exerts considerable influence upon the properties of hardened cement stone. In spite of several published papers (Refs 1 - 5) this problem has not yet been cleared. Therefore the hydration processes were investigated at the Institute under different conditions of temperature and moisture together with the influence exerted by additions of ground quartz sand and asbestos. The compounds mentioned in the title were produced. The results showed the following: $Ca(OH)_2$ as well as calcium-hydrosilicates, the phase composition of which depends on the temperature, to which the system was exposed, form in the system C_3S-H due to the process of hydration. The determination of this phase composition

Card 1/4

APPROVED FOR RELEASE: 09/17/2001 CIA-RDP86-00513R000722010013-5"

"APPROVED FOR RELEASE: 09/17/2001 CIA-RDP86-00513R000722010013-5

On the Phase Composition of Products Formed in the Hydration of C_3S and β-C_2S

is rendered difficult by the fact that the characteristic lines for the fibrous hydrosilicates C_2SH_2 and CSH(B) on the radiograms (3,04 and 1,83 Å) coincide with the lines of non-hydrated alite. It is true that the lack of characteristic lines of other hydrosilicates causes the formation of fibrous hydrosilicates to be considered probable (Figure 1). The absence of the exothermal effect at 830-860°C on thermograms (Figure 2, a, b, v) which is characteristic of CSH(B) permits the conclusion that C_2SH_2 forms under these conditions. During the hydration of C_3S in the presence of asbestos in the system C_3S-A-H the amount of C_3SH_2 is considerably reduced, but on the whole the same phase composition as in system C_3S-H is preserved. The influence exerted by treatment in an autoclave upon the hardness of cement stone of C_3S (Table 1) depends on the intensity of the former. A too intensive treatment leads to a decrease in hardness. Worked for 8 hours at 8 atmospheres excess pressure the stone gains in hardness. By the addition of ground quartz sand the phase composition of the new formations in the C_3S-H system produced by the autoclave treatment is abruptly changed (Figure 3). The $Ca(OH)_2$-content is considerably reduced,

APPROVED FOR RELEASE: 09/17/2001 CIA-RDP86-00513R000722010013-5"

"APPROVED FOR RELEASE: 09/17/2001 CIA-RDP86-00513R000722010013-5

SOV/20-120-2-42/63

On the Phase Composition of Products Formed in the Hydration of C_3S and β-C_2S

C_3SH_2 and $C_3SH(A)$ are absent. Instead of strongly basic hydrosilicates C_3SH_2 and $C_2SH(A)$ weakly basic hydrosilicates CSH(B) (Fig 3) form. On the introduction of asbestos into the system the new formations are additionally changed. The influence of different regimes of the autoclave-treatment upon the hardness of a mixture of 75 % C_2S + 25 % S is still more complicated, as an overlapping of the corrosion effect of asbestos probably occurs here. There are 4 figures, 2 tables, and 6 referances, 4 of which are Soviet.

ASSOCIATION: Vsesoyuznyy nauchno-issledovatel'skiy institut asbesta, slyudy, asbestotsementnykh izdeliy i proyektirovaniya stroitel'stva predpriyatiy slyudyanoy promyshlennosti (All Union Scientific Research Institute for Asbestos, Mica, Asbestos-Cement-Products and for the Design of Factories of Mica Industry)

PRESENTED: December 18, 1957, by P. A. Rebinder, Member, Academy of Sciences, USSR

SUBMITTED: December 3, 1957

Card 3/4

APPROVED FOR RELEASE: 09/17/2001 CIA-RDP86-00513R000722010013-5"

"APPROVED FOR RELEASE: 09/17/2001 CIA-RDP86-00513R000722010013-5

On the Phase Composition of Products Formed in the Hydration of C_3S and β-C_2S SOV/20-120-2-42/63

1. Concrete—Phase studies 2. Concrete—Properties
3. Concrete—Processing 4. Concrete—Test methods

Card 4/4

APPROVED FOR RELEASE: 09/17/2001 CIA-RDP86-00513R000722010013-5"

"APPROVED FOR RELEASE: 09/17/2001 CIA-RDP86-00513R000722010013-5

SOV/20-120-4-45/67

AUTHORS: Berkovich, T. M., ~~Kheyker, D. M.,~~ Cracheva, O. I., Zevin, L. S., Kupreyeva, N. I.

TITLE: Investigation of the Properties of Calcium Hydrosilicates (Issledovaniye svoystv gidrosilikatov kal'tsiya)

PERIODICAL: Doklady Akademii nauk SSSR, 1958, Vol. 120, Nr 4, pp.853-856 (USSR)

ABSTRACT: Several authors based their explanations of the particular features of the technical properties (strength, shrinking) of binding materials on the conceptions concerning the phase composition, the structure and the existence of individual calcium hydrosilicates in the hydrated concrete. However, the data obtained by different authors concerning the individual calcium hydrosilicates do not always agree with each other. In order to obtain a clear picture of the phase composition of complicated systems of hydrosilicates a comprehensive phase analysis must be employed. In this connection the knowledge of such constants of hydrosilicates as the interplanar spacing, the line intensity in X-ray diagrams, the temperature and the magnitude of thermal effects, the position of the absorption

Card 1/4

APPROVED FOR RELEASE: 09/17/2001 CIA-RDP86-00513R000722010013-5"

"APPROVED FOR RELEASE: 09/17/2001 CIA-RDP86-00513R000722010013-5

bands in the infrared spectra and similar data is necessary. Apart from these data an understanding of the technical properties of the individual hydrosilicates must be reached if the development of production methods of materials with prescribed properties is intended. In the Institute "Asbesttsement" a number of the most important hydrosilicates was synthetized, and their properties were studied. The X-ray diagrams (Fig 1) were recorded by means of CuKα radiation with a nickel filter on a diffractometer of the type UPC-50I with a Geiger counter. The curves of thermal differential analysis and of weight losses on heating (Fig 2) were determined on a thermalbalance. The absorption spectra in the infrared range (Fig 3) were taken on a IKS-11 spectrometer. Electron microscope images were obtained with a microscope EM-3 with an electron-optical scale factor of 3900. The hydrosilicate C_2SH (A) which is formed in the hydration of portland concrete and which leads to a reduction of the strength of autoclave products, was synthesized by a hydrothermal treatment of a mixture of CaO with quartz sand mixed at a ratio of 2:1 at 175° during 72 hours. The hydrosilicate $C_2SH(C)$ was formed after an identical treatment of 70 hours

APPROVED FOR RELEASE: 09/17/2001 CIA-RDP86-00513R000722010013-5"

"APPROVED FOR RELEASE: 09/17/2001 CIA-RDP86-00513R000722010013-5

duration. Low-basicity hydrosilicates CSH(B) with a fiber-like texture of a basicity of from 1,25-0,8 play an important part in the autoclave hardening of sandy cements and low-basicity lime-sand mixtures. Together with tobermorite they are the cause for the high strength of these minerals. They were produced by a hydrothermal treatment of a mixture of CaO- and silicagel (1:1) at 175°, for 1, 2 and 3 hours or for from 6 - 8 hours. The hydrosilicate $C_4S_5H_5$ (tobermorite) was synthesized from CaO and quartz sand (0,8:1) at 175°, and a heating for from 12 - 48 hours or of 7 days. Hydrosilicate of flint CSH(A) was produced from CaO and quartz sand with a value of C/S = 0,8 + 18 % of water at a pressure of 100 kg/cm^2 at 175°, for from 14 to 60 days. The experiments showed that the reaction of the formation of hydrosilicates is considerably slowed down in pressed samples at a steaming in autoclaves as compared to the reaction of the same initial components taken as a suspension. In spite of the existing evidence (Ref 11) stating that among calcium hydrosilicates tobermorite has the greatest crushing strength, the experiments of the authors show, that the flexure strength of the

APPROVED FOR RELEASE: 09/17/2001 CIA-RDP86-00513R000722010013-5"

"APPROVED FOR RELEASE: 09/17/2001 CIA-RDP86-00513R000722010013-5

Investigation of the Properties of Calcium Hydrosilicates SOV/20-120-4-45/67

samples does not increase with growing content of tobermorite. It can be supposed that the flexure strength of fiber-like structures is by no means inferior to that of plate-like structures, which was proved. There are 3 figures and 11 references, 3 of which are Soviet.

PRESENTED: February 5, 1958, by P. A. Rebinder, Member, Academy of Sciences, USSR

SUBMITTED: December 13, 1957

1. Calcium silicates--Properties 2. Calcium silicates--Phase studies 3. Calcium silicates--Analysis

Card 4/4

APPROVED FOR RELEASE: 09/17/2001 CIA-RDP86-00513R000722010013-5"

"APPROVED FOR RELEASE: 09/17/2001 CIA-RDP86-00513R000722010013-5

KHEYKER, D.M.

ZEVIN, L. S.; ZOLINA, Z. K.; ZUBENKO, V. V.; KHEYKER, D. M.; UMANSKIY, M.M.

"The Precision Determinations of Lattice Constants"

a report presented at Symposium of the International Union of Crystallography Leningrad, 21-27 May 1959

4

APPROVED FOR RELEASE: 09/17/2001 CIA-RDP86-00513R000722010013-5"

"APPROVED FOR RELEASE: 09/17/2001 CIA-RDP86-00513R000722010013-5

SOV/70-4-1-9/26

AUTHORS: Kheyker, D.M., Konstantinov, I.Ye. and Alekseyev, V.A.

TITLE: The Application of the Scintillation Counter in X-ray Structural Analysis (Primeneniye stsintillyatsionnogo schetchika v rentgenostrukturnom analize)

PERIODICAL: Kristallografiya, 1959, Vol 4, Nr 1, pp 54-61 (USSR)

ABSTRACT: A scintillation counter and recorder with discriminating circuits which is suitable for use with the URS-50I diffractometer is described. The block diagram is given in Figure 1, where:

1 - crystal, NaI(Tl), size 20x5x1 mm;
2 - photomultiplier FEU-29;
3 - cathode follower;
4 - H.T. stabilised rectifier, 1500 V supply, ripple content < 0.2%;
5 - linear amplifier, rise-time 0.5 μsec, maximum amplification 4000, resolving time 1-2 μsec;
6, 7 - stabilised amplifier supplies;
8 - differential discriminator, resolving time 2.5-3 μsec, position (0 to 100 V) and width of channel (0-10 V) are continuously variable;

Card1/4

APPROVED FOR RELEASE: 09/17/2001 CIA-RDP86-00513R000722010013-5"

"APPROVED FOR RELEASE: 09/17/2001 CIA-RDP86-00513R000722010013-5

9 - countering circuit;
10 - timing relay;
11 - countering circuit, PS-64 type counting 1,4,16, 256 and 1024 with resolving time 2.5-3 μsec;
12 - electromechanical counter;
13 - integrating circuit with 2 ranges 0 to 100 and 0-200 pulses/sec;
14 - recorder;
15 - mains.

The installation has the following characteristics. Linearity: the resolving time of the counter is about 0.25 μsec and the limiting factor is the resolving time of the recording circuits, which is about 2.5-3.0 μsec, so that the departure from linearity does not exceed 1% up to 3500 counts/sec. Efficiency: the quantum efficiency of the counter is determined by the thickness of the window, usually the reflected beam passes through black paper and 14 μ Al foil. The absorptions for Mo, Cu and Fe radiation are 2, 20 and 40%, respectively.

APPROVED FOR RELEASE: 09/17/2001 CIA-RDP86-00513R000722010013-5"

"APPROVED FOR RELEASE: 09/17/2001 CIA-RDP86-00513R000722010013-5

SOV/70-4-1-9/26

The Application of the Scintillation Counter in X-ray Structural Analysis

Spectral characteristics: curves are given showing that all usual wavelengths can be employed and that there is good discrimination against noise but that a β-filter should always be used. The counter background is ~ 0.1 counts/sec for Cu radiation. The r.m.s. error in measuring a given line over periods of a day is about 1.5%. In normal use, the efficiency of a Geiger counter may be 30-50% and that of a scintillation counter 80-90%. If there is heavy fluorescence or Compton scattering, the proportional counter will have advantages and a scintillation counter may need a monochromator after the specimen. There are 6 figures and 10 references, 6 of which are Soviet and 4 English.

Card3/4

APPROVED FOR RELEASE: 09/17/2001 CIA-RDP86-00513R000722010013-5"

"APPROVED FOR RELEASE: 09/17/2001 CIA-RDP86-00513R000722010013-5

The Application of the Scintillation Counter in X-ray Structural Analysis- SOV/70-4-1-9/26

ASSOCIATIONS: Vniiasbesttsement MPSM SSSR
Moskovskiy inzhenerno-fizicheskiy institut
(Moscow Engineering and Physics Institute)

SUBMITTED: November 4, 1957

Card 4/4

APPROVED FOR RELEASE: 09/17/2001 CIA-RDP86-00513R000722010013-5"

"APPROVED FOR RELEASE: 09/17/2001 CIA-RDP86-00513R000722010013-5

AUTHORS: Umanskiy, M.M., Kheyker, D.M. and Zevin, L.S. SOV/70-4-3-14/32

TITLE: Precision Measurement of Unit Cell Parameters With a Diffractometer

PERIODICAL: Kristallografiya, 1959, Vol 4, Nr 3, pp 372-381 (USSR)

ABSTRACT: It is recommended that the positions of diffraction peaks should be measured from the positions of their centres of gravity. A method of finding such positions with a diffractometer is described. Here, wavelengths, not of the emission intensity maxima but of the centres of gravity of the spectral lines must be used. The corrections for the Lorentz, polarisation and angular dispersion factors are examined. A focusing monochromator was fitted to the URS-50I diffractometer which enabled it to record up to $2\theta = 168^{\circ}$ and had an inappreciable vertical divergence. As an example, the parameter of the unit cell of tungsten was found, using CuKβ radiation with this technique. At 25 °C it was found to be $a = 3.16526 \pm 0.00005$ Å (including the refraction correction). This was for a wavelength of CuKβ of 1.39223 Å for its centre of gravity. The following

Card1/3

APPROVED FOR RELEASE: 09/17/2001 CIA-RDP86-00513R000722010013-5"

"APPROVED FOR RELEASE: 09/17/2001 CIA-RDP86-00513R000722010013-5

Precision Measurement of Unit Cell Parameters With a Diffractometer SOV/70-4-3-14/32

sources of error have been minimised by calculation and experiment: 1) departure of the plane of the specimen from the surface giving point focusing; 2) penetration of the X-rays into the specimen; 3) displacement of the reflecting plane from the goniometer axis; 4) vertical divergence of primary and reflected beams; 5) errors in the zero setting of the counter position; 6) electrical errors connected with the integrating circuit and recorder inertia. Various adjusting jigs for setting the specimen and finding the zero position to $\pm$ 0.2' are described. Calculated curves of a) measurement time against distance from the line centre of gravity; b) magnitude of relative error in intensity measurement against distance from line centre of gravity; c) magnitude of relative error in intensity measurement against intensity are given calculated for the geometrical parameters used. Read at the 6th All-Union Conference on the Application of X-rays to the Study of Materials, June 6, 1958.

Card 2/3

APPROVED FOR RELEASE: 09/17/2001 CIA-RDP86-00513R000722010013-5"

"APPROVED FOR RELEASE: 09/17/2001 CIA-RDP86-00513R000722010013-5

SOV/70-4-3-14/32

Precision Measurement of Unit Cell Parameters With a Diffractometer

There are 7 figures, 1 table and 12 references, of which 3 are Soviet, 7 English, 1 French and 1 international.

ASSOCIATIONS: Moskovskiy gosudarstvennyy universitet imeni M.V. Lomonosova (Moscow State University imeni M.V. Lomonosov)
VNII Asbest-tsement

Card 3/3

APPROVED FOR RELEASE: 09/17/2001 CIA-RDP86-00513R000722010013-5"

"APPROVED FOR RELEASE: 09/17/2001 CIA-RDP86-00513R000722010013-5

BUTT, Yu.M., doktor tekhn.nauk, prof.; MAYYER, A.A., kand.tekhn.nauk; RASHKOVICH, L.N., kand.tekhn.nauk; GRACHEVA, O.I., kand.tekhn.nauk; KHEYKER, D.M., kand.fiziko-matematicheskikh nauk

Physical properties and microstructure of calcium hydrosilicates. Sbor. trud. ROSNIIMS no.17:66-76 '60. (MIRA 14:12)
(Calcium silicate)

APPROVED FOR RELEASE: 09/17/2001 CIA-RDP86-00513R000722010013-5"

"APPROVED FOR RELEASE: 09/17/2001 CIA-RDP86-00513R000722010013-5

S/032/60/026/04/38/046
B010/B006

AUTHORS: Alekseyev, V.A., Konstantinov, I.Ye., Kheyker, D.M.

TITLE: Scintillator for the Diffractometer of the Type URS-50I

PERIODICAL: Zavodskaya laboratoriya, 1960, Vol. 26, No. 4, pp. 501-502

TEXT: The present paper was read at the sixth conference on the application of X-rays for testing materials, which was held in Leningrad, from June 23-29, 1958. A scintillator for the diffractometer of the type URS-50I was designed. The block diagram of the apparatus is shown (Fig. 1). The scintillation counter contains a NaJ (Tl)-scintillation crystal (the crystals were prepared by A.B. Gil'varg, a collaborator of the Institut kristallografii AN SSSR (Institute of Crystallography of the AS USSR)) and an FEU-29 photomultiplier. The measuring arrangement comprises a voltage stabilizer of the type SNE-220-0.75, a PS-10000 translator, and a differential discriminator with the integrator, as well as an EPP-09 potentiometer, which is arranged separately. An amplifier stage of the 6Zh3P tube is used with the discriminator (Fig. 2, scheme of discriminator). The integrator scheme is similar to that of the measuring apparatus of the type "Bambuk". The scintillator described renders possible the counting of 50, 500,

Card 1/2

APPROVED FOR RELEASE: 09/17/2001 CIA-RDP86-00513R000722010013-5"

"APPROVED FOR RELEASE: 09/17/2001 CIA-RDP86-00513R000722010013-5

AUTHORS: Volkov, O. S., Kheyker, D. M.

S/032/60/036/03/045/064
B010/B117

TITLE: Attachment to the Diffractometer of the Type URS-50-I Used for Phase Analysis

PERIODICAL: Zavodskaya laboratoriya, 1960, Vol 36, Nr 3, pp 363-364 (USSR)

TEXT: An attachment intended for use in qualitative and quantitative phase analyses with the apparatus of the type URS-50-I is described. If a thermostat is used, high-precision determinations of the lattice constants can be performed as well. The base plate of the attachment is fastened to the goniometer table, and is connected with the overlying table of the attachment by means of a differential screw (Fig 1). On this table, there is a support with a gear and the sample holder. The sample can be rotated at a speed of 20 rpm by a motor of the type SD-60 by means of the gear. On the other hand, the table can be placed in a position perpendicular to the surface of the sample by the differential screw. The calibration of the attachment is performed by using special adjusting parts (Fig 2). Methods used to ascertain the zero position of the counter slit are described. There are 3 figures and 3 references, 2 of which are Soviet.

Card 1/2

APPROVED FOR RELEASE: 09/17/2001 CIA-RDP86-00513R000722010013-5"

"APPROVED FOR RELEASE: 09/17/2001 CIA-RDP86-00513R000722010013-5

S/081/62/000/001/029/067
B151/B101

AUTHORS: Sukhova, L. A., Kheyker, D. M.

TITLE: The application of control and measurement equipment using nuclear radiation in the building materials industry

PERIODICAL: Referativnyy zhurnal. Khimiya, no. 1, 1962, 303, abstract 1I157 (Sb."Radioaktivn. izotopy i yadern. izlucheniya v nar. kh-ve SSSR. v. 2". M., Gostoptekhizdat, 1961, 27-30)

TEXT: The NIIASBESTTsEMENT Institute has carried out work on the introduction into the building materials industry of various types of equipments using nuclear radiation. In an asbestos enrichment plant (Asbest) using a radioactive level indicator of the РИУ-1 (RIU-1) type it was found possible to control the degree of filling of the ore bunkers quite reliably and later to carry out automation of the transporters. For measuring the concentration of the asbestos-cement mass, in the tanks of the grid cylinder ("Krasnyy stroitel'", Voskresensk) an industrial densimeter of the ПЖР-2 (PZhR-2) type was used, in which the activity of the source of

Card 1/2

APPROVED FOR RELEASE: 09/17/2001 CIA-RDP86-00513R000722010013-5"