"APPROVED FOR RELEASE: 09/17/2001 CIA-RDP86-00513R000722020016-1

KHIZGILOV, Izrail Khizgilovich

[Preserving the quality of petroleum in transportation and storage] Sokhranenie kachestva nefteproduktov pri ikh transporte i khranenii. Moskva, Nedra, 1965. 190 p. (MIRA 18:7)

APPROVED FOR RELEASE: 09/17/2001 CIA-RDP86-00513R000722020016-1"

"APPROVED FOR RELEASE: 09/17/2001 CIA-RDP86-00513R000722020016-1

BELOPOL'SKIY, M.S., kand. nauk; KHIZH, A.B., inzh.; GUMENYUK, Ye.L., inzh.

Adopting a spray-drying apparatus at the Lvov ceramic plant. Stek. i ker. 22 no.9:4-6 S '65. (MIRA 18:9)

1. Gosudarstvennyy nauchno-issledovatel'skiy institut stroitel'noy keramiki Gosstroya SSSR (for Belopol'skiy, Khizh). 2. L'vovskiy keramicheskiy zavod (for Gumenyuk).

APPROVED FOR RELEASE: 09/17/2001 CIA-RDP86-00513R000722020016-1"

"APPROVED FOR RELEASE: 09/17/2001 CIA-RDP86-00513R000722020016-1

KHIZH, B.A.

Budnikov, P. P., and Khizh, B. A. FORMATION OF MULLITE IN REFRACTORIES. —*J. Applied Chem.* (U.S.S.R.), 3, 21-24 (1930).—Furnace lining made of a mixture of clays which was fired at 1300° analyzed SiO_2 57.0 to 58.0, Al_2O_3 36.4 to 37.3, Fe_2O_3 1.5 to 2, and CaO 1.5 to 1.9%. After 6 months' service in a coal-fired furnace its composition changed to SiO_2 49.38, Al_2O_3 28.54, Fe_2O_3 20.82, and CaO 0.91%. Microscopic examination revealed the presence of a large number of crystals of mullite with embedded crystals of FeO. Under certain conditions formation of mullite in refractories is favored by Fe compounds. Expert firing leads to the formation of a surface film on the refractory material and lengthens the time of its service. The life of refractories is also prolonged if the raw material after the usual firing procedure is subjected, for a short length of time, to the action of a still higher temperature in a reducing medium.

APPROVED FOR RELEASE: 09/17/2001 CIA-RDP86-00513R000722020016-1"

"APPROVED FOR RELEASE: 09/17/2001 CIA-RDP86-00513R000722020016-1

R

Khish, B. A., and Skoblina, S. I. MULLICOR, A NEW CERAMIC MATERIAL. *Keram. i Stekło*, 9 [9] 24-26 (1933). — A series of experiments, based on the assumption that the dimensions of the grain of aluminum oxide and its shape have a great effect on the temperature of vitrification of the body, were made on mixes consisting of (1) Al_2O_3 as oxide (obtained from bauxite) with kaolin in varying proportions and (2) Al_2O_3 (natural corundum) and kaolin. The results are tabulated and shown on curves. It was found that in mixes of (2) the porosity of the body increases with the corundum content, while in mixes of (1) the body becomes more dense with the increasing Al_2O_3 content (up to 80% Al_2O_3 and 20% kaolin); after this the body becomes porous again. Bodies produced from Mullicor mixes have a vitrified body and are only slightly inferior to the German sintered corundum bodies.

APPROVED FOR RELEASE: 09/17/2001 CIA-RDP86-00513R000722020016-1"

"APPROVED FOR RELEASE: 09/17/2001 CIA-RDP86-00513R000722020016-1

1ST AND 2ND ORDERS

PROCESSES AND PROPERTIES INDEX

3RD AND 4TH ORDERS

19

CA

Utilization of the gold-containing waste materials in porcelain faience plants. B. A. Khizh. *Stroitel. Materialy* 1938, No. 12, 34-5; *Khim. Referat. Zhur.* 2, No. 5, [illegible] (1939).—The materials which have been in contact with the Au paint are first burned. The ashes are then transferred to the refinery for extn. Instructions for the collection, storing and regeneration of the gold-contg. materials are given.

W. R. Henn

ASM-SLA METALLURGICAL LITERATURE CLASSIFICATION

APPROVED FOR RELEASE: 09/17/2001 CIA-RDP86-00513R000722020016-1"

"APPROVED FOR RELEASE: 09/17/2001 CIA-RDP86-00513R000722020016-1

A.C.S.

Art + Archeology

Decorating porcelain ware. B. A. Kreizer. Russ. 58,570, Dec. 31, 1940; *Chem. Abs.*, 39, 1004 (1945).—A low-melting Cu-containing flux is applied to the goods to be decorated, and the articles are fired first in an oxidizing atmosphere at 700° to 800° and then in a reducing atmosphere.

APPROVED FOR RELEASE: 09/17/2001 CIA-RDP86-00513R000722020016-1"

"APPROVED FOR RELEASE: 09/17/2001 CIA-RDP86-00513R000722020016-1

KHIZH, B. A.

Khizh, B. A. "Ceroplast -- a new ceramo-organic material and its new material base," in symposium: Syr'yevyye resury tonkokeram prom-sti SSSR i puti ikh ispol'zovaniya, Moscow-Leningrad, 1948, p. 95-100

SO: U-2888, Letopis Zhurnal'nykh Statey, No. 1, 1949

APPROVED FOR RELEASE: 09/17/2001 CIA-RDP86-00513R000722020016-1"

"APPROVED FOR RELEASE: 09/17/2001 CIA-RDP86-00513R000722020016-1

KHIZH, B., kandidat tekhnicheskikh nauk.

Using asbestos plastics in producing building materials. Stroi. mat.,izdel.i konstr. 1 no.11:20-21 N '55. (MLRA 9:5)
(Plastic materials)

APPROVED FOR RELEASE: 09/17/2001 CIA-RDP86-00513R000722020016-1"

"APPROVED FOR RELEASE: 09/17/2001 CIA-RDP86-00513R000722020016-1

KHIZH, B.A.

Improving the technology of batch preparation for the production of Mettlach tiles. Stek. i ker. 13 no.3:22-23 Mr '56.(MIRA 9:6)
(Ceramic industries) (Tiles)

APPROVED FOR RELEASE: 09/17/2001 CIA-RDP86-00513R000722020016-1"

"APPROVED FOR RELEASE: 09/17/2001 CIA-RDP86-00513R000722020016-1

KHIZANASHVILI, Georgiy Davidovich; BUKHNIKASHVILI, A.V., red.; ABRAMISHVILI, T.A., red.izd-va; KIKNADZE, I.V., tekhn.red.

[Dynamics of the earth's axis of rotation and of ocean levels] Dinamika zemnoi osi vrashcheniia i urovnei okeanov. Tbilisi, Gos.izd-vo uchebno-pedagog.lit-ry "TSodna," 1960. 140 p. (MIRA 14:1)

(Earth) (Ocean)

APPROVED FOR RELEASE: 09/17/2001 CIA-RDP86-00513R000722020016-1"

"APPROVED FOR RELEASE: 09/17/2001 CIA-RDP86-00513R000722020016-1

S/035/62/000/011/045/079
A001/A101

AUTHOR: Khizhak, L. S.

TITLE: On the problem of effect of refraction in municipal triangulation

PERIODICAL: Referativnyy zhurnal, Astronomiya i Geodeziya, no. 11, 1962, 10 - 11, abstract 11G93 ("Nauchn. zap. L'vovsk. politekhn. in-t. Ser. geod.", 1961, no. 6, 200 - 208)

TEXT: The author describes investigations performed in L'vov in August 1956 with the aim of determining specific features of the refraction field over the town and its vicinities. Air temperature was measured during 8 days, with one-hour intervals (from 7 to 20 hr) at points A and E located at L'vov outskirts and at point B being in the town center; it was measured at heights 1, 2, 3 and 4 m over the underlying surface and at a height of 1.5 m were determined pressure, humidity, velocity and direction of wind. Simultaneously with temperature measurements at point A were measured horizontal directions to points B and E with an instrument AУ (AU) 2"/10", as well as to points C, D and F which were selected so that sighting rays would pass under different conditions and at

Card 1/2

APPROVED FOR RELEASE: 09/17/2001 CIA-RDP86-00513R000722020016-1"

"APPROVED FOR RELEASE: 09/17/2001 CIA-RDP86-00513R000722020016-1

different heights over the town. Distances between A and other points were 2 - 3 km. An analysis of observational results has shown that a rather stable refraction field is established in the town and its vicinities, even at variable weather with a low intensity of solar radiation and great amount of precipitation. Errors in horizontal angles measured in one period of visibility, caused by refraction, may attain 2 - 3". Graphs are presented in the article which characterize changes in air temperature with height during the day at points located in the town center and its vicinities.

V. Sinyagina

[Abstracter's note: Complete translation]

APPROVED FOR RELEASE: 09/17/2001 CIA-RDP86-00513R000722020016-1"

"APPROVED FOR RELEASE: 09/17/2001 CIA-RDP86-00513R000722020016-1

KHIZHIN, V. YU.

BATUNIN, M.P., prof., zasluzhennyy deyatel' nauki; KAGAN, M.Z., starshiy nauchnyy sotrudnik; MIKHAYLOV, K.A., dotsent; NOSYREVA, N.N., nauchnyy sotrudnik; KHIZHIN, V.Yu., nauchnyy sotrudnik

Observations on the treatment of syphilitic patients with bicillin I. Vest.derm.i ven. 33 no.5:50-54 S-O '59. (MIRA 13:2)

1. Iz Gor'kovskogo nauchno-issledovatel'skogo kozhno-venerologicheskogo instituta i kafedry kozhno-venericheskikh bolezney Gor'kovskogo gosudarstvennogo meditsinskogo instituta imeni S.M. Kirova (direktor instituta i zaveduyushchiy kafedroy - zasluzhennyy deyatel' nauki prof. M.P. Batunin).

(SYPHILIS ther.)
(PENICILLIN ther.)

APPROVED FOR RELEASE: 09/17/2001 CIA-RDP86-00513R000722020016-1"

"APPROVED FOR RELEASE: 09/17/2001 CIA-RDP86-00513R000722020016-1

KHIZHIN, V.Yu.

Fluorescence spectra of intravitally fluorochrome-treated microorganisms. Zhur.mikrobiol., epid. i immun. 42 no.3:22-25 Mr '65. (MIRA 18:6)

1. Gor'kovskiy nauchno-issledovatel'skiy kozhno-venerologicheskiy instituta.

APPROVED FOR RELEASE: 09/17/2001 CIA-RDP86-00513R000722020016-1"

"APPROVED FOR RELEASE: 09/17/2001 CIA-RDP86-00513R000722020016-1

STUPNITSKAYA, V.M.; MARINOV, M.P.; LITVINENKO, Ye.F.; SLESARENKO, V.V.; SLESARENKO, A.S.; KHIZHINSKAYA, O.P.; STEPANOVA, I.A.; BUYALO, S.G.

Natural foci of tularemia on the territory of the Ukrainian S.S.R. Zhur. mikrobiol., epid. i immun. 41 no.10:94-98 '64. (MIRA 18:5)

1. Basseynovaya sanitarno-epidemiologicheskaya stantsiya Ministerstva zdravookhraneniya UkrSSR, Kiyev.

APPROVED FOR RELEASE: 09/17/2001 CIA-RDP86-00513R000722020016-1"

"APPROVED FOR RELEASE: 09/17/2001 CIA-RDP86-00513R000722020016-1

KHIZHINKAYA, O. P.

KHIZHINSKAYA, O.P.

USSR/Medicine - Tularemia, Vaccine

258T21

Mar 53

"Allergic Reactions in Humans Following a Cutaneous Administration of Egg-Yolk Tularemia Vaccine," S. S. D'yachenko, O. P. Khizhinkaya, and S. G. Buyalo - Chair Microbiology, Kiev Med. Inst.

Z

Mikrobiol Zhur, Vol 15, No 1, pp 27-32

Cutaneous inoculation with egg-yolk vaccine produces readjustment within a human organism that follows usually the intracutaneous tularin test. The egg-yolk vaccine itself and the method of administration create sensitivity within an

258T21

organism similar to that created by the transmitted form of tularemia infection. The intracutaneous allergic reaction to the living tularemia vaccine is a specific reaction, because it is positive only in those people who have recuperated from tularemis, those who have been revaccinated, or have received a cutaneous vaccination. Reinoculation may be resorted to within 2 years, depending on epidemiological needs.

APPROVED FOR RELEASE: 09/17/2001 CIA-RDP86-00513R000722020016-1"

"APPROVED FOR RELEASE: 09/17/2001 CIA-RDP86-00513R000722020016-1

KHIZHINS'KA, O.P.

MOROZ, A.P.; KHIZHINS'KA, O.P.; BUYALO, K.G.

Immunologic reactions and their duration in humans following epicutaneous injection of living tularemia vaccine prepared on egg yolk. Mikrobiol. zhur. 17 no.3:40-45 '55 (MLRA 10:5)

1. Z Kiivs'kogo medichnogo institutu ta Kiivs'koi sposterezhnoi stantsii.
(TULAREMIA, immunology,
vacc., immunol. reactions to living vaccine prep. on egg yolk) (Uk)

APPROVED FOR RELEASE: 09/17/2001 CIA-RDP86-00513R000722020016-1"

"APPROVED FOR RELEASE: 09/17/2001 CIA-RDP86-00513R000722020016-1

KHIZHINSKAYA, O. P., MARINOV, M. P., LITVINENKO, E. F., STEPANOVA, I. A., SLESAREVKO, A. S., STEPNITSKAYA, V. M., SLEGAREVKO, V. V., BUYALO, S. G., ALAMOVITCH, V. V.

"On the natural focus of tularemia in the Ukrainian SSR." p. 186.

Desyatoye soveshchaniye po parazitologicheskim problemam i prirodnoochagovym bloeznyam. 22-29 Oktyabrya 1959 g. (Tenth Conference on Parasitological Problems and Diseases with Natural Foci 22-29 October 1959), Moscow-Leningrad, 1959, Academy of Medical Sciences USSR and Academy of Sciences USSR, No. 1 254pp.

Basin Sanitary-Epideniology Station, Public health aMin. Uk SSR/Kiev

APPROVED FOR RELEASE: 09/17/2001 CIA-RDP86-00513R000722020016-1"

"APPROVED FOR RELEASE: 09/17/2001 CIA-RDP86-00513R000722020016-1

KHIZHINSKAYA, O.P.

3

L 17971-65 EWT(1)/T/EWA(b) Pa-4 AMD JK
ACCESSION NR: AP5002642 S/0016/64/000/010/0094/0098

AUTHOR: Stupnitskaya, V. M.; Marinov, M. P.; Litvinenko, Ye. F.; Slesarenko, V. V.; Slesarenko, A.S.; Khizhinskaya, O.P.; Stepanova, I. A.; Buyalo, S. G.

TITLE: Natural foci of tularemia in the Ukrainian SSR

SOURCE: Zhurnal mikrobiologii, epidemiologii i immunobiologii, no. 10, 1964, 94-98 B

TOPIC TAGS: bacterial disease, immunology, disease control

ABSTRACT: Between 1956 and 1962, 265 cultures of the tularemia pathogen were isolated from 350,000 ticks collected in various districts of the Ukrainian SSR. The foci were maintained by several rodent hosts and the disease was carried by Ixodes ricinus, Dermacentor pictus, and other blood-sucking insects. The article contains detailed descriptions of the important tularemia foci in the Ukraine and methods of selective vaccination used in control measures. Orig. art. has 2 tables.

ASSOCIATION: Basseynovaya sanitarno-epidemiologicheskaya stantsiya Ministerstva zdravookhraneniya, UkrSSR, Kiev; (Basin Sanitary and Epidemiological Station, Ministry of Health, UkrSSR)

Card 1/2 Submitted - 4 DEC '62

APPROVED FOR RELEASE: 09/17/2001 CIA-RDP86-00513R000722020016-1"

"APPROVED FOR RELEASE: 09/17/2001 CIA-RDP86-00513R000722020016-1

GLOBA, B.A.; MAKHAROV, B.V.; KULZHINSKAYA, V.A.

Laboratory precision-type 0.05 measuring a.c. transformer with ratings up to 10,000 amperes. Izm. tekh. no.1:46-47 Ja '65.
(MIRA 18:4)

APPROVED FOR RELEASE: 09/17/2001 CIA-RDP86-00513R000722020016-1"

"APPROVED FOR RELEASE: 09/17/2001 CIA-RDP86-00513R000722020016-1

L 31311-66 EWT(1)/T JA

ACC NR: AP6022[illegible] (A,N) SOURCE CODE: UR/0346/66/000/001/0018/0020

AUTHOR: Lavrova, T. S.; Sergeyev, V. A.; Trubitsyn, B. I.; Khizhinskaya, V. P.

ORG: All-Union Scientific Research Institute of Veterinary Virology and Microbiology (Vsesoyuznyy nauchno-issledovatel'skiy institut veterinarnoy virusologii i mikrobiologii)

TITLE: Reproduction of foot-and-mouth disease virus in a tissue culture of pig embryo kidney

SOURCE: Veterinariya, no. 1, 1966, 18-20

TOPIC TAGS: foot and mouth disease, virus, virology, vaccine

ABSTRACT: The effect of certain conditions on reproduction of the foot-and-mouth disease virus (Type O) in a culture of pig embryo kidney cells was studied. The strain used was obtained from cattle and adapted in 7-8 passages to the pig embryo kidney culture. It was found that reproduction of the virus in the culture did not depend on previous adsorption of the virus in the culture did not depend on previous adsorption of the virus to the cells. In cultivating the foot-and-mouth disease virus in this culture in one-liter flasks it is good to inoculate the culture simultaneously with a change of the medium (pH 7.6), introducing the virus in a dose of 10^{-2}-10^{3} TCD_{50}/ml. The infected cultures are incubated at 37° C for 18-20 hours. Cultivation of foot-and-mouth disease virus in this way was found promising for producing vaccine. Orig. art. has: 3 tables. [JPRS]

SUB CODE: 06 / SUBM DATE: none / ORIG REF: 003 / OTH REF: 006

Card 1/1 CC UDC: 619.616.988.43-093.35

0915 05:98

APPROVED FOR RELEASE: 09/17/2001 CIA-RDP86-00513R000722020016-1"

"APPROVED FOR RELEASE: 09/17/2001 CIA-RDP86-00513R000722020016-1

VOLKOV, V.M.; KHIZHINSKIY, B.P.

Obtainment of a logarithmic amplitude characteristic in a selective amplifier using automatic gain control with consideration of pulse envelope. Izv. vys. ucheb. zav.; radiotekh. 5 no.4:498-505 Jl-Ag '62. (MIRA 16:6)

1. Rekomendovana kafedroy vychislitel'noy tekhniki Kiyevskogo ordena Lenina politekhnicheskogo instituta.
(Amplifiers(Electronics))

APPROVED FOR RELEASE: 09/17/2001 CIA-RDP86-00513R000722020016-1"

"APPROVED FOR RELEASE: 09/17/2001 CIA-RDP86-00513R000722020016-1

VOLKOV, V.M.; KHIZHINSKIY, B.P.

Exponential tuned radio pulse amplifier. Izv. vys. ucheb. zav.; radiotekh. 4 no. 2:165-174 Mr-Ap '61. (MIRA 14:5)

1. Rekomendovana kafedroy vychislitel'noy tekhniki Kiyevskogo ordena Lenina politekhnicheskogo instituta.
(Amplifiers (Electronics) (Pulse techniques (Electronics))

APPROVED FOR RELEASE: 09/17/2001 CIA-RDP86-00513R000722020016-1"

"APPROVED FOR RELEASE: 09/17/2001 CIA-RDP86-00513R000722020016-1

41428

S/142/62/005/004/006/010
E192/E382

-1,2510

AUTHORS: Volkov, V.M. and Khizhinskiy, B.P.

TITLE: Producing a logarithmic amplitude characteristic in a selective amplifier by means of the automatic gain control based on a radio-pulse envelope

PERIODICAL: Izvestiya vysshikh uchebnykh zavedeniy, Radiotekhnika, v. 5, no. 4, 1962, 498 - 505

TEXT: A logarithmic amplitude characteristic in an n-stage amplifer can be achieved if the stages are identical and work in succession in linear, logarithmic and quasi-linear operating conditions. Since the amplitude characteristic of a stage is $U_2 = I_{A1}R_H$, where U_2 is the output voltage, I_{A1} is the amplitude of the first harmonic of the anode current and R_H is the anode-load resistance, the required amplitude characteristic of the stage can be achieved by automatically changing the magnitude of the first current harmonic I_{A1}. This can be done without using nonlinear semiconductor elements.

Card 1/4

APPROVED FOR RELEASE: 09/17/2001 CIA-RDP86-00513R000722020016-1"

"APPROVED FOR RELEASE: 09/17/2001 CIA-RDP86-00513R000722020016-1

S/142/62/005/004/006/010
E192/E382

The amplifying stage performing this operation is illustrated in Fig. 2, where the resistance R_K and the capacitance C_K are chosen in such a way that the negative feedback is negligible at the radio frequency and is significant at the video or envelope frequency. The operating conditions for the stage should be chosen in such a way that, at small input voltages, the DC component of the cathode current is approximately constant and thus the gain is constant; as the amplitude of the input signal is increased, the DC component of the cathode current is increased due to the nonlinearity of the tube characteristic and this leads to an increase in the bias voltage E_c so that the operating point on the anode-grid characteristic shifts towards the lefthand side and the gain is reduced. The value of R_K can be chosen so as to produce the linear amplitude characteristic. Several methods of approximating the characteristic of the tube are considered and the approximation of the anode current by a hyperbolic tangent (method devised by N.N. Krylov - Elektricheskiye protsessy v nelineynykh tsepyakh

APPROVED FOR RELEASE: 09/17/2001 CIA-RDP86-00513R000722020016-1"

"APPROVED FOR RELEASE: 09/17/2001 CIA-RDP86-00513R000722020016-1

Producing a ....

S/142/62/005/004/006/010
E192/E382

radiopriyemnikov (Electrical processes in nonlinear circuits of radio receivers), Gostekhizdat, SSSR, 1933) is used to design a logarithmic amplifying stage. An amplifier based on four such stages was designed. This operated at f_o = 30 Mc/s and had a bandwidth ΔF = 1 Mc/s. The amplitude characteristic of the amplifier is illustrated in Fig. 9, where the horizontal axis represents the input voltage. Fig. 9 shows that the amplitude characteristic does not deviate by more than 3% from the exact logarithmic characteristic and that the dynamic range of the amplifier is 80 db. The response time of the amplifier to amplitude changes does not exceed 0.5 μs. There are 9 figures.

ASSOCIATION: Kafedra vychislitel'noy tekhniki Kiyevskogo ordena Lenina politekhnicheskogo instituta (Department of Computer Techniques of Kiyev Order of Lenin Polytechnical Institute)

SUBMITTED: November 24, 1960

Card 3/4

APPROVED FOR RELEASE: 09/17/2001 CIA-RDP86-00513R000722020016-1"

"APPROVED FOR RELEASE: 09/17/2001 CIA-RDP86-00513R000722020016-1

Producing a ....

S/142/62/005/004/006/010
E192/E382

Fig. 2:

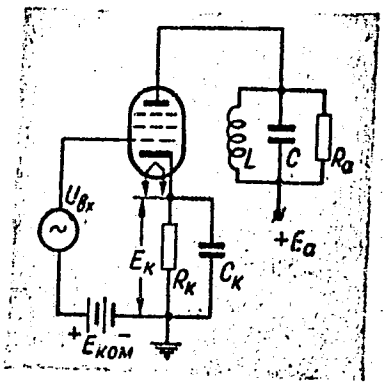

Fig. 9:

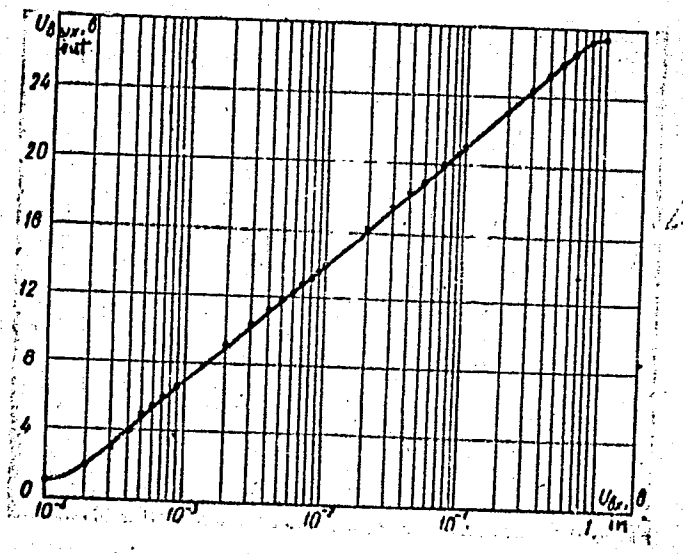

Card 4/4

APPROVED FOR RELEASE: 09/17/2001 CIA-RDP86-00513R000722020016-1"

"APPROVED FOR RELEASE: 09/17/2001 CIA-RDP86-00513R000722020016-1

VERKHOVSKAYA, V.A.; DEYNEKO, V.F., prof.; ZYKOV, K.A.; KISLITSYN, A.S.; MURASHEV, S.A.; OBIRALOV, A.I.; PETRUSHINA, R.S.; POPOV, A.F.; RUMER, A.O.; SKOBELEV, A.T.; KHIZHINSKIY, D.G.; SHURYGINA, A.I., red. izd-va; ROMANOVA, V.V., tekhn. red.

[Laboratory work in aerophotogeodesy for land utilization faculties of higher agricultural schools]Laboratornye raboty po aerofotogeodezii; dlia zemleustroitel'nykh fakul'tetov sel'skokhoziaistvennykh vuzov. Pod obshchei red. V.F.Deineko. Moskva, Izd-vo geodez.lit-ry, 1962. 109 p. (MIRA 15:10)

1. Moscow. Institut inzhenerov zemleustroystva. 2. Kafedra aerofotogeodezii Moskovskogo instituta inzhenerov zemleustroystva (for all except Shurygina, Romanova).
(Aerial photogrammetry)

APPROVED FOR RELEASE: 09/17/2001 CIA-RDP86-00513R000722020016-1"

"APPROVED FOR RELEASE: 09/17/2001 CIA-RDP86-00513R000722020016-1

RUDENSKIY, Lev Veniaminovich[deceased]; KHROMOY, Ruvim Samoylovich; LENKOV, Aleksandr Yakovlevich; FAYNBERG, Yuliy Konstantinovich; SALIT, Yevsey Solomonovich; KAUFMAN, Grigoriy Emmanuilovich; KHIZHINSKIY, Leonid Yakovlevich; KOMAROV, Vasiliy Yefimovich; TSYRUL'NIKOV, Abram Iosifovich; ROZENTSVEYG, Ya.D., red.izd-va; MAIKHAYLOVA, V.V., tekhn. red.

[Study of materials] Materialovedenie. By L.V.Rudenskii i dr. Moskva, Gos.nauchno-tekhn.izd-vo lit-ry po chernoi i tsvetnoi metallurgii, 1961. 476 p. (MIRA 14:12)

(Materials)

APPROVED FOR RELEASE: 09/17/2001 CIA-RDP86-00513R000722020016-1"

"APPROVED FOR RELEASE: 09/17/2001 CIA-RDP86-00513R000722020016-1

KHIZHINSKIY, P.G.

BABENKO, L.V.; DAVYDOVA, M.S.; ZAKORKINA, T.N.; BLOKHIN, V.G.; VOROBKOV, N.A.; NAUMOV, R.L.; KHIZHINSKIY, P.G.

Characteristics of an area of endemic tick-borne encephalitis in the construction zone of the Krasnoyarsk Hydroelectric Power Station and development of measures for the protection of workers against ticks; preliminary report. Med.paraz.i paraz.bol. 27 no.1:6-14 Ja-F '58. (MIRA 11:4)

1. Iz sektora entomologii Instituta malyarii, meditsinskoy parazitologii i gel'mintologii Ministerstva zdravookhraneniya SSSR (dir. instituta - prof. P.G.Sergiyev, zav. sektorom - prof. V.N.Beklemishev) i Omskogo Instituta epidemiologii, mikrobiologii i gigiyeny.

(ENCEPHALITIS, epidemiology
tick-borne encephalitis in construction zone, protection of workers (Rus))

APPROVED FOR RELEASE: 09/17/2001 CIA-RDP86-00513R000722020016-1"

"APPROVED FOR RELEASE: 09/17/2001 CIA-RDP86-00513R000722020016-1

KHIZHINSKIY, P.G.

Activation, quantity and the duration of the active life of the tick Ixodes persulcatus in the forests of Krasnoyarsk territory. Med. paraz. i paraz. bol. 32 no.1:6-13 Ja-F'63. (MIRA 16:10)

1. Iz otdela entomologii (zav. - prof. V.N.Beklemishev [deceased]) Instituta meditsinskoy parazitologii i tropicheskoy meditsiny imeni Ye.I.Martsinovskogo (dir. - prof. P.G. Sergiyev) Ministerstva zdravookhraneniya SSSR.

*

APPROVED FOR RELEASE: 09/17/2001 CIA-RDP86-00513R000722020016-1"

"APPROVED FOR RELEASE: 09/17/2001 CIA-RDP86-00513R000722020016-1

BAKULOV, I.A.; KHIZHINSKIY, P.G.; SAKOVICH, O.Yu.; KOZLOVA, D.I.; KOTLYAROV, V.M.; KOTLYAROVA, G.A.

Titration of the pathogen of literiosis on chick embryos and white mice. Veterinariia 42 no.10:25-28 O '65. (MIRA 18:10)

1. Vsesoyuznyy nauchno-issledovatel'skiy institut veterinarnoy virusologii i mikrobiologii.

APPROVED FOR RELEASE: 09/17/2001 CIA-RDP86-00513R000722020016-1"

"APPROVED FOR RELEASE: 09/17/2001 CIA-RDP86-00513R000722020016-1

Mashinostroyeniye, no. 1, 1[illegible]

[illegible] electrodeposition, [illegible]

[illegible], sodium chloride - 25, [illegible] temperature of the electrolyte [illegible] - 40. The [illegible] ultrasound current [illegible] 10 [illegible] 20 [illegible] 40 [illegible] 60 [illegible] 80 [illegible] 100 [illegible] 120 [illegible] 140 [illegible] 160 [illegible] 180 [illegible] 200 [illegible] 220 [illegible] 240 [illegible] 260 [illegible] 280 [illegible] 300 [illegible] 320 [illegible] 340 [illegible] 360 [illegible] 380 [illegible] 400 [illegible]

"APPROVED FOR RELEASE: 09/17/2001 CIA-RDP86-00513R000722020016-1

L 5[illegible]

[illegible] NR: AP5013662

[illegible] produced nonporous, smooth, well [illegible] coatings [illegible] uniformity and fineness [illegible]

[illegible] was 15 times greater than that without ultrasound.

ASSOCIATION: none

[illegible]: 00 ENCL: 00 SUB CODE: MM

NO REF SOV: 000 OTHER: 000

Card 2/2

APPROVED FOR RELEASE: 09/17/2001 CIA-RDP86-00513R000722020016-1"

"APPROVED FOR RELEASE: 09/17/2001 CIA-RDP86-00513R000722020016-1

ACC NR: AP7005763 SOURCE CODE: UR/0126/67/023/001/0179/0182

AUTHOR: Pines, B. Ya.; Bazyura, R. I.; Khizhkovyy, V. P.

ORG: Khar'kov State University im. A. M. Gor'kiy (Khar'kovskiy gosuniversitet)

TITLE: Concentration dependence of the limit of linear increase in creep of Cu-Ni alloys

SOURCE: Fizika metallov i metallovedeniye, v. 23, no. 1, 1967, 179-182

TOPIC TAGS: binary alloy, copper, nickel, creep mechanism

ABSTRACT: Previous studies of the kinetics of high-temperature creep in pure metals (Pines, B. Ya., et al. FTT, 1963, 5, 2859; Pines, B. Ya., Khizhkovyy, V. P. FMM, 1966, 22, 82) established that the rate v of steady-state creep depends on stress p: at temperatures $T > 0.5\ T_{m.p.}$ and low values of p creep rate linearly increases with p and exponentially with T. Once p exceeds certain critical limit (the so-called "limit p_0 of linear increase in creep"), creep rate begins to sharply increase. It was found that p is proportional to the modulus of elasticity. Now the authors investigate the effect of soluble impurities on the magnitude and temperature dependence of p_0 with respect to alloys of the Cu-Ni system forming a continuous series of solid solutions (Cu + 5, 19, 15, 30, 40, 70, and 90% Ni). Findings: p_0 and the modu-

Card 1/2 UDC: 669.3:539.5

APPROVED FOR RELEASE: 09/17/2001 CIA-RDP86-00513R000722020016-1"

"APPROVED FOR RELEASE: 09/17/2001 CIA-RDP86-00513R000722020016-1

ACC NR: AP7005763

lus E of elasticity increase with increase in the Ni concentration of the alloy. In all cases p_0 (i.e. the limit of linear increase in creep) linearly decreases with increase in $T/T_{m.p.}$ and reaches 0 when $T = T_{m.p.}$ Nevertheless, p_0 cannot be regarded as an analogue of yield point at high temperatures at which diffusion creep occurs, because the values of p_0 in cold--worked metals and alloys are lower than in specimens annealed at high temperatures. At medium temperatures preliminary cold working causes hardening of the metal and retardation of creep rate, whereas at temperatures close to the melting point preliminary cold working leads to "softening" of the metal and increase in creep rate. There is as yet no unambiguous explanation for this phenomenon. It may be associated with the enhanced (non-equilibrium) concentration of vacancies occurring in the presence of a large number of dislocations which results in an accelerated climb of dislocations." The authors are grateful to S. S. Avotin for participation in preparing specimens of the alloys." Orig. art. has: 4 figures.

SUB CODE: 11 20/ SUBM DATE: 31May66/ ORIG REF: 008/ OTH REF: 001

Card 2/2

APPROVED FOR RELEASE: 09/17/2001 CIA-RDP86-00513R000722020016-1"

"APPROVED FOR RELEASE: 09/17/2001 CIA-RDP86-00513R000722020016-1

PINES, B.Ya.; BADIYAN, Ye.Ye. ; KHIZHKOVYY, V.P.

Kinetics of creep in single crystals of metals and alloys at high temperatures. Fiz. tver. tela 5 no.10:2859-2870 O '63. (MIRA 16:11)

1. Khar'kovskiy gosudarstvennyy universitet im. A.M. Gor'kogo.

APPROVED FOR RELEASE: 09/17/2001 CIA-RDP86-00513R000722020016-1"

"APPROVED FOR RELEASE: 09/17/2001 CIA-RDP86-00513R000722020016-1

L 09012-67 EWP(e)/EWT(m)/EWP(t)/ETI/EWP(k) IJP(c) JD/HW
ACC NR: AP6027790 (N) SOURCE CODE: UR/0126/66/022/001/0082/0086

AUTHOR: Pines, B. Ya.; Khizhkovyy, V. P.

ORG: Khar'kov State University im. A. M. Gor'kiy (Khar'kovskiy gosuniversitet)

62
60

TITLE: Temperature dependence of linear creep limit

SOURCE: Fizika metallov i metallovedeniye, v. 22, no. 1, 1966, 82-86

TOPIC TAGS: temperature dependence, creep, powder metal, metal crystal

ABSTRACT: The article presents the results of an experimental determination of the characteristics of high-temperature creep ($\alpha = v/p$; p_0, where v is the rate of steady-state creep, p is the applied stress and p_0 is the linear creep limit) for monocrystals and powders and castings of Co, Cu, Ni and Fe at pre-melting-point temperatures. In the linear creep region the rate of steady-state creep for powder specimens is one order of magnitude higher than for monocrystalline specimens. The kinetics of creep for $p < p_0$ in the high-temperature range (700-1500°C) corresponds to the course of the process of self-diffusion. Hence, the powders of Cu (and also of Ni, Fe) display a creep rate roughly one order of magnitude higher than that of the monocrystals of these metals. As the duration of high-temperature annealing

Card 1/3

UDC: 539.376

APPROVED FOR RELEASE: 09/17/2001 CIA-RDP86-00513R000722020016-1"

"APPROVED FOR RELEASE: 09/17/2001 CIA-RDP86-00513R000722020016-1

L 09012-67
ACC NR: AP6027790

2

(sintering) increases, creep rate decreases, owing to the approach of the powder specimens to a thermodynamic equilibrium (decrease in dislocation density). p_0 is proportional to the modulus E of elasticity. When normalized with respect to E, the values of linear creep limit as a function of adjusted temperature lie satisfactorily along a straight line for all the metals investigated. (Fig. 1) The resulting linear dependence is apparently of a general nature. The

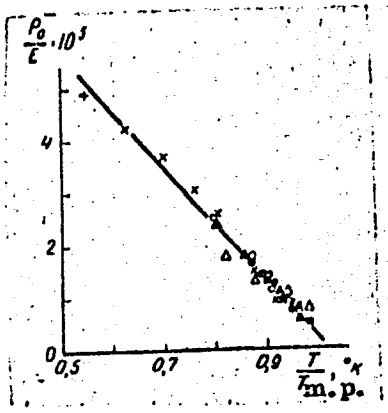

Fig. 1. p_0, normalized with respect to the modulus of elasticity, as a function of the adjusted temperature $T/T_{m.p.}$ for different specimens

x- Fe powder; Δ - Ni powder; □ - Co monocrystal; o - Ni monocrystal; O - Cu monocrystal; Δ - Al monocrystal

Card 2/3

APPROVED FOR RELEASE: 09/17/2001 CIA-RDP86-00513R000722020016-1"

"APPROVED FOR RELEASE: 09/17/2001 CIA-RDP86-00513R000722020016-1

L 09012-67

ACC NR: AP6027790

patterns of the temperature dependence of p_0 resemble those known for yield point, and hence p_0 may be interpreted as an analogue of yield point at higher temperatures (at finite straining rates). Orig. art. has: 8 figures, 1 formula.

SUB CODE: 11,20/ SUBM DATE: 28Aug65/ ORIG REF: 006/ OTH REF: 002

Card 3/3 nst

APPROVED FOR RELEASE: 09/17/2001 CIA-RDP86-00513R000722020016-1"

"APPROVED FOR RELEASE: 09/17/2001 CIA-RDP86-00513R000722020016-1

KHIZHNIAK, P.P.; IVANENKO, I.P.

[Safety measures in woodworking] Tekhnika bezopasnosti pri derevo-obrabotke. 2-e izd. Moskva, Profizdat, 1954. 62 p. (MIRA 8:2D)

APPROVED FOR RELEASE: 09/17/2001 CIA-RDP86-00513R000722020016-1"

"APPROVED FOR RELEASE: 09/17/2001 CIA-RDP86-00513R000722020016-1

PETROV, A.K.; SPERANSKIY, V.G.; KHIZHNICHENKO, A.M.; SHILYAYEV, B.A.; DANILOV, A.K.; BORODULIN, G.M.; ZAMOTAYEV, S.P.; MARKARYANTS, A.A.; SOLNTSEV, P.I.; SMIRNOV, Yu.D.; VAYNBERG, G.S.; OKOROKOV, N.V.; KOLOSOV, M.I.; SEL'KIN, G.S.; MEDOVAR, B.I.; LATASH, Yu.B.; YEFROYMOVICH, Yu.Ye.; VINOGRADOV, V.M.; SVEDE-SHVETS, N.N.; SKOROKHOD, S.D.; KATSEVICH, L.S.; SHTROMBERG, Ya.A.; MIKHAYLOV, O.A.; PATON, B.Ye.

Reports (brief annotations). Biul. TSNIIGHM no.18/19:67-68 '57. (MIRA 11:4)

1. Zavod Dneprospetsstal' (for Speranskiy, Borodulin). 2. Chelyabinskiy metallurgicheskiy zavod (for Khizhnichenko). 3. Uralmashzavod (for Zamotayev). 4. Trest "Elektropech'" (for Vaynberg). 5. Moskovskiy institut stali (for Okorokov). 6. TSentral'nyy nauchno-issledovatel'skiy institut chernoy metallurgii (for Sel'kin, Svede-Shvets). 7. Institut elektrosvarki AN USSR (for Paton, Medovar, Latash). 8. TSentral'naya laboratoriya avtomatiki (for Yefroymovich, Vinogradov). 9. Giseogneupor (for Skorokhod). 10. Trest "Elektropech'" (for Katsevich). 11. Tbilisskiy nauchno-issledovatel'skiy institut okhrany truda Vsesoyuznogo tsentral'nogo soveta profsoyuzov (for Shtromberg).

(Steel—Metallurgy)

APPROVED FOR RELEASE: 09/17/2001 CIA-RDP86-00513R000722020016-1"

"APPROVED FOR RELEASE: 09/17/2001 CIA-RDP86-00513R000722020016-1

KEYS, N.V.; ZHUKOV, D.G.; KHIZHNICHENKO, A.M.

Improving the technology of smelting transformer metal. Stal' 12 no.2:130-131 F '59. (MIRA 12:2)

1. Chelyabinskiy metallurgicheskiy zavod.
(Smelting) (Vacuum metallurgy) (Metallurgical plants--quality control)

APPROVED FOR RELEASE: 09/17/2001 CIA-RDP86-00513R000722020016-1"

"APPROVED FOR RELEASE: 09/17/2001 CIA-RDP86-00513R000722020016-1

137-58-6-11778

Translation from: Referativnyy zhurnal, Metallurgiya, 1958, Nr 6, p 82 (USSR)

AUTHOR: Khizhnichenko, A.M.

TITLE: A Procedure for the Smelting of Structural and Tool Steels with Oxygen in 40-ton Furnaces (Tekhnologiya vyplavki konstruktsionnykh i instrumental'nykh staley s primeneniyem kisloroda na pechakh sadkoy 40 t)

PERIODICAL: Tr. Nauchno-tekhn. o-va chernoy metallurgii, 1957, Vol 18, pp 556-559

ABSTRACT: A description is offered of a procedure for making structural and tool steels in 40-t electric arc furnaces using O_2; performance indices gleaned at the Chelyabinsk metallurgical plant are presented. The introduction of O_2 is by lined Fe lances 19.05 mm in diameter, at 16 atm excess pressure, at the end of the melt-down period and during the period of oxidation. When the heat is run with complete oxidation. [C] in the charge exceeds by 0.20-0.25% the calculated content for heats without O_2, and lime or limestone is added in the amount of 2% of the weight of the charge. Bauxite is also added. At the onset of oxidation 400 kg Fe ore is added and, when [P] is

Card 1/2

APPROVED FOR RELEASE: 09/17/2001 CIA-RDP86-00513R000722020016-1"

"APPROVED FOR RELEASE: 09/17/2001 CIA-RDP86-00513R000722020016-1

137-58-6-11778

A Procedure for the Smelting (cont.)

0.03-0.04% of the melt, the slag is skimmed off completely. When the heat is run by the remelting procedure, the charge consists 70-80% of scrap of the type of steel being made and of carbon-steel rejects, calculated to produce [C] 0.10-0.15% higher than the top limit in the finished steel, lime or limestone and bauxite is added to the charge. It is established that the quality of the steel is not impaired when O_2 is used. When the O_2 flow rate amounts to 5-11 m^3/t, the length of the heat is reduced by 20-30 min, the rate of C burn-off being ~1% per hour, power consumption is reduced by 35-125 kwh/t, furnace output rises by 5-9%, the cost of the steel is reduced, the efficiency of employment of alloy scrap is improved, and the number of heats that can be run without the use of soft Fe is increased.

A.Sh.

1. Steel--Production 2. Tool steel--Production 3. Oxygen--Applications
4. Electric furnaces--Operation

Card 2/2

APPROVED FOR RELEASE: 09/17/2001 CIA-RDP86-00513R000722020016-1"

"APPROVED FOR RELEASE: 09/17/2001 CIA-RDP86-00513R000722020016-1

SOV/133-59-2-10/26

AUTHORS: Keys, N.V., Zhukov, D.G and Khizhnichenko, A.M.

TITLE: Mastering of the Production of Transformer Steel (Ostoyeniye vyplavki transformatornogo metalla)

PERIODICAL: Stal', 1959, Nr 2, pp 130-131 (USSR)

ABSTRACT: The development of the smelting practice of transformer steel in 40 ton arc furnaces with subsequent teeming in 6.2 ton ingots is briefly outlined. The main points of established practice: Oxidation of carbon to 0.10 - 0.15% with iron ore and further 0.03% carbon with dried oxygen, (250 - 450 m^3/heat). At the beginning of the reducing period the metal is preliminarily deoxidised with silicocalcium in lumps (1.5 kg/t) and then during 15 - 20 min with powdered ferrosilicon (10 kg/t) and aluminium powder (1 kg/t). 20 - 25 minutes before tapping the metal is alloyed with 75% ferrosilicon. The metal temperature before tapping should be 1620-1635°C and in the ladle 1570-1590°C. Depending on the temperature the metal is retained in ladle for 10-20 minutes and then treated with a desulphurising mixture containing lime fluorospar and calcined soda. The metal in the ladle is vacuo treated for 8-10 minutes at a residual pressure of

Card 1/2

APPROVED FOR RELEASE: 09/17/2001 CIA-RDP86-00513R000722020016-1"

"APPROVED FOR RELEASE: 09/17/2001 CIA-RDP86-00513R000722020016-1

SOV/133-59-2-10/26

Mastering of the Production of Transformer Steel

30 - 60 mm. Vacuo-treatment decreases the hydrogen content from 4.0 - 9.0 to 3.8 - 7.0 cm^3/100 g of metal and the surface defects of slabs by a factor of 1.5 - 2.

ASSOCIATION: Chelyabinskiy Metallurgicheskiy Zavod (Chelyabinsk Metallurgical Works)

Card 2/2

APPROVED FOR RELEASE: 09/17/2001 CIA-RDP86-00513R000722020016-1"

"APPROVED FOR RELEASE: 09/17/2001 CIA-RDP86-00513R000722020016-1

S/137/61/000/006/016/092
A006/A101

AUTHORS: Shved, F.I., Zhukov, D.G., Khizhnichenko, A.M., Kolosov, M.I.

TITLE: Increased silicochrome consumption for stainless steel melting

PERIODICAL: Referativnyy zhurnal. Metallurgiya, no. 6, 1961, 42, abstract 6V299 ("Sb. nauchno-tekhn. tr. N.-i. in-t metallurgii Chelyab. sovnarkhoza", 1960, no. 2, 57 - 64)

TEXT: A technology was developed for melting stainless 1Х18Н9Т (1Kh18N9T) steel providing for the addition of a higher Si-Cr amount immediately after O_2 blast. It is shown that the addition of 25-35 kg/t Si-Cr 50 or 35-40 kg/t Si-Chr 40 causes an increase in the degree of Cr extraction from the slag and a reduced consumption of carbonless Fe-Cr. [Si] in the finished metal does not increase, since Si-Cr is added to the non-deoxidized bath. It is noted that a further reduction of [Si] in the finished metal is obtained by replacing Fe-Ti, introducing usually about 0.15% Si, by Ti metal waste. A nomogram was developed which may be used to determine the optimum consumption of deoxidizers per heat from the total consumption of O_2, the amount of Si and C in the charge and also from the basicity of the slag.

V. Shumskiy

[Abstracter's note: Complete translation]

Card 1/1

APPROVED FOR RELEASE: 09/17/2001 CIA-RDP86-00513R000722020016-1"

"APPROVED FOR RELEASE: 09/17/2001 CIA-RDP86-00513R000722020016-1

S/133/61/000/002/003/014
A054/A033

AUTHORS: Shved, F. I.; Zhukov, D. G. and Khizhnichenko, A. M.

TITLE: Increase of Silicon-Chromium Consumption Rate When Melting Stainless Steel

PERIODICAL: Stal', 1961, No. 2, pp. 128 - 129

TEXT: The consumption of chromium-silicon during the melting of 1X8H9T (1Kh8N9T) grade stainless steel in the Soviet metallurgical plants amounted to not more than 15 kg/t, although in some USA-plants stainless steel (with 0.08 % C and 1 % Si) is produced with up to 50 kg/t silicon-chromium in the charge. The authors of the article and D.B. Royak, Ye. S. Lyanin R.V. Bobov-Suetin, Kh. Sh. Samokhuzhin, A. I. Yakunin et al. studied ways and means of increasing the chromium-silicon-amount in melting 1Kh8N9T grade steel which would mean considerable savings in carbon-free ferrochromium. Up to April 1959 this steel was smelted in the Chelyabinsk metallurgicheskiy zavod (Chelyabinsk Metallurgical Plant) in the following way: immediately after blowing, 12 - 15 kg/t manganese-silicon and 10 - 15 kg/t crushed

Card 1/6

APPROVED FOR RELEASE: 09/17/2001 CIA-RDP86-00513R000722020016-1"

"APPROVED FOR RELEASE: 09/17/2001 CIA-RDP86-00513R000722020016-1

S/133/61/000/002/003/014
A054/A033

Increase of Silicon-Chromium Consumption Rate When Melting Stainless Steel

chromium-silicon or 45 % ferrosilicon were added to the charge and after mixing the slag for a short while, ferrochromium was added. In the new technology no ferrochromium was added after blowing manganese-silicon was replaced by medium-carbon ferromanganese which was added towards the end of the melting process. Next the bath was cooled down after blowing in stainless steel scrap. When blowing was ended, 40 - 45 kg/t waste of chromium-silicon and 25 - 30 kg/t crushed chromium-silicon were added, and the bath was stirred for 20 - 25 minutes. After this the slag was tapped, but a thin remaining layer, samples were taken and finally ferrochromium was added. The correcting additions of ferrochromium and nickel were calculated according to the samples taken before adding ferrochromium. The final smelting phases remained unchanged. The following data characterize the savings effected by this new method, (numerators: conventional technology, average 1958-indices, denominators: new technology, average indices for May-December 1959):

Melting-time, hour-minutes $\frac{6 - 24}{6 - 10}$

Card 2/6

APPROVED FOR RELEASE: 09/17/2001 CIA-RDP86-00513R000722020016-1"

"APPROVED FOR RELEASE: 09/17/2001 CIA-RDP86-00513R000722020016-1

S/133/61/000/002/003/014
A054/A033

Increase of Silicon-Chromium Consumption Rate When Melting Stainless Steel

Electricity-consumption, kwh-h/ton of serviceable ingots	559.1 / 542.5
Consumption of carbon-free ferrochromium, (type 0000-00) kg/ton of faultless steel	167.9 / 139.5

In spite of the use of a greater amount of chromium-silicon, the Si-content in the finished metal decreased somewhat. However, when adding chromium--silicon after ferrochromium, the Si-content of the metal increased and the total recovery of chromium decreased. This is explained by the higher oxygen content of the chromium-containing metal towards the end of the blowing process. When adding ferrochromium immediately after blowing, a part of chromium oxidized and penetrated into the slag, while the oxygen concentration of the metal decreased. Silicium, added after this phase as chromium--silicon or ferrosilicium is largely assimilated by the metal, which had been already deoxidized beforehand by chromium. The subsequent decrease of

Card 3/6

APPROVED FOR RELEASE: 09/17/2001 CIA-RDP86-00513R000722020016-1"

"APPROVED FOR RELEASE: 09/17/2001 CIA-RDP86-00513R000722020016-1

S/133/61/000/002/003/014
A054/A033

Increase of Silicon-Chromium Consumption Rate When Melting Stainless Steel

the Si-content in the metal due to the reduction of chromium from the slag took place rather slowly, because it was connected with the diffusion of silicium and chromium in the metal and of their oxides in the slag. Even when the consumption of deoxidizers is low and the recovery of chromium decreases, the Si-content of the metal remains high. When, however, chromium-silicon was charged immediately after blowing, all the oxygen-content of the metal was bonded by silicium; even when applying an increased amount of deoxidizers, the Si-content of the metal was insignificant and by adding ferrochromium to the deoxidizing bath, the total amount of chromium reclaimed increased. The amount of chromium-silicon used in the process and recovery of chromium from the slag can be increased still further by replacing ferro-titanium by metallic titanium metal waste, by increasing the basicity of the slag and by determining the amount of deoxidizers used for each heat according to the amount of oxygen spent. There are 3 figures and 3 references: 2 Soviet, 1 non-Soviet.

Card 4/6

APPROVED FOR RELEASE: 09/17/2001 CIA-RDP86-00513R000722020016-1"

"APPROVED FOR RELEASE: 09/17/2001 CIA-RDP86-00513R000722020016-1

S/133/61/000/002/003/014
A054/A033

Increase of Silicon-Chromium Consumption Rate When Melting Stainless Steel

Figure 1:

Frequency diagram of the Si-content in the finished (1Kh18N9T) steel depending on the deoxidizing conditions:

1 - deoxidizing with ferrosilicium or chromium-silicon (10-12 kg/t)
2 - idem, with chromium-silicon (25-30 kg/t)
3 - idem, when replacing ferrotitanium by metallic titanium scrap

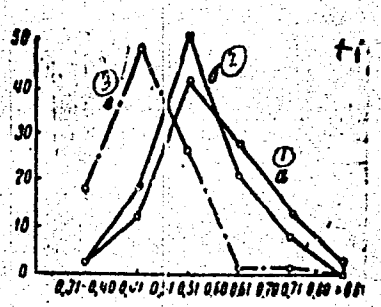

Card 5/6

APPROVED FOR RELEASE: 09/17/2001 CIA-RDP86-00513R000722020016-1"

"APPROVED FOR RELEASE: 09/17/2001 CIA-RDP86-00513R000722020016-1

S/133/61/000/002/003/014
A054/A033

Increase of Silicon-Chromium Consumption Rate When Melting Stainless Steel

Figure 2:

Nomogram for the rating of the optimum consumption of chromium-silicon (Si) for deoxidizing the slag (R = basicity of slag)

1 - Si-content in the initial charge
2 - C-content in the initial charge
3 - Optimum Si-content for the deoxidation of the slag
4 - total amount of oxygen consumed during smelting and blowing, НМ3
5 - Oxygen consumed for oxydation of Cr, Fe, Mn, НМ3

Fig. 2

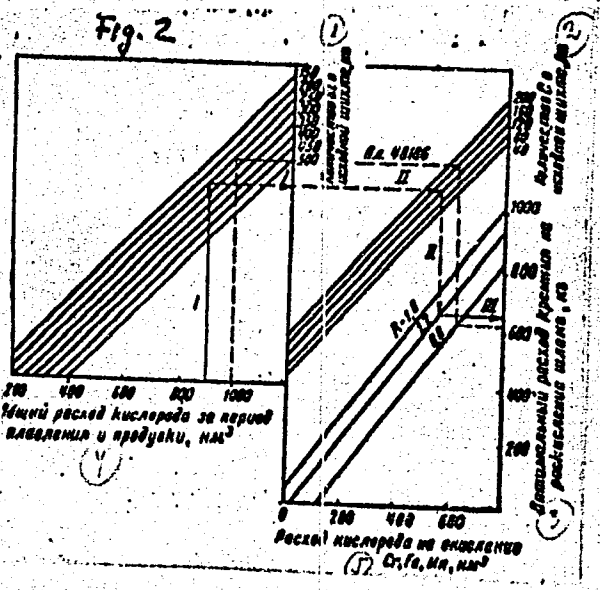

Card 6/6

APPROVED FOR RELEASE: 09/17/2001 CIA-RDP86-00513R000722020016-1"

"APPROVED FOR RELEASE: 09/17/2001 CIA-RDP86-00513R000722020016-1

S/133/63/000/004/001/011
A054/A126

AUTHORS: Lubenets, I. A., Morozov, A. N., Galyan, V. S., Knizhnichenko, A. M.

TITLE: Melting electrosteel with the use of liquid cast iron

PERIODICAL: Stal', no. 4, 1963, 323 - 325

TEXT: Liquid cast iron (containing 4.2 - 4.3% C; 0.75 - 1.15% Si; 0.70 - 1.40% Mn; 0.025 - 0.050% S; 0.13 - 0.16% P) is used in an electric melting plant in amounts of 30 - 50% of the charge and is fed into the furnace in 4 - 6 minutes, 50 - 70 minutes after the current was switched on. The difficulties encountered in deslagging after the cast iron had been fed were eliminated by feeding the total amount of lime required after tapping the first acidic slag. When establishing the technology for electric melting with the use of liquid cast iron it had to be considered that iron ore has a lower oxidizing effect in electric smelters than in open-hearth furnaces. The liquid cast iron melting method can only be used for high-carbon instrument steel (У12/U12 - У7/U7) and ШХ15 (ShKh15) ball bearing steel. Advantages of the new method are a reduced power consumption (by 20%) and a higher (by 2%) output of flawless products. Best re-

Card 1/2

APPROVED FOR RELEASE: 09/17/2001 CIA-RDP86-00513R000722020016-1"

"APPROVED FOR RELEASE: 09/17/2001 CIA-RDP86-00513R000722020016-1

S/133/63/000/004/001/011
Melting electrosteel with the use of liquid cast iron A054/A126

sults were obtained when adding 35 - 40% liquid cast iron. Still better results might be expected if the liquid cast iron is refined prior to being fed into the furnace, as the silicon and manganese and a greater part of the carbon content could then be removed by the duplex process. In electric melting shops this could be done by a steam-oxygen treatment. However, the latter proposals by the authors are not yet sufficiently supported by test results. The tests described were carried out in co-operation with N. V. Keys, M. Ya. Yartsev, T. I. Malinovskaya, S. T. Ushakov, M. I. Shatalov, M. A. Bornovalov, I. Ya. Loyberg, A. F. Kozlov, G. K. Feltego, V. I. Berdnikov, and R. M. Khayrutdinov. There are 2 figures.

Card 2/2

APPROVED FOR RELEASE: 09/17/2001 CIA-RDP86-00513R000722020016-1"

"APPROVED FOR RELEASE: 09/17/2001 CIA-RDP86-00513R000722020016-1

KHIZHNICHENKO, I.M., zaslusbennyy agronom RSFSR, Geroy Sotsialisticheskogo Truda

Sharp increase in feed production. Zemledelie 7 no.4:68-72 Ap '59. (MIRA 12:6)

(Krasnodar Territory--Feeds)

APPROVED FOR RELEASE: 09/17/2001 CIA-RDP86-00513R000722020016-1"

"APPROVED FOR RELEASE: 09/17/2001 CIA-RDP86-00513R000722020016-1

KROMER, P.F.; KHIZNICHENKO, L.P.

Change of the elastic properties of molten quartz under the action of Co^{60} gamma-radiation. Izv. AN Uz.SSR. Ser. fiz.-mat. nauk 3:87-88 '61. (MIRA 14:8)

1. Institut yadernoy fiziki AN UzSSR.
(Gamma rays) (Solids, Effect of radiation on) (Quartz)

APPROVED FOR RELEASE: 09/17/2001 CIA-RDP86-00513R000722020016-1"

"APPROVED FOR RELEASE: 09/17/2001 CIA-RDP86-00513R000722020016-1

15.2610

27146
S/166/61/000/004/005/007
B112/B102

AUTHORS: Domoryad, I. A., Starodubtsev, S. V., Member of the AS Uzbekskaya SSR, Khiznichenko, L. P.

TITLE: Precise method of measuring the changes of the elasticity characteristics of glass-like substances

PERIODICAL: Akademiya nauk Uzbekskoy SSR. Izvestiya. Seriya fiziko - matematicheskikh nauk, no. 4, 1961, 57 - 62

TEXT: The authors describe a method of determining the relative change $\Delta G/G$ of the shearing modulus G of glass-like substances as depending on the relative change $\Delta\nu/\nu$ of the frequency ν of torsional oscillations. This dependence is given by (2):

$$\Delta G/G = -3\Delta L/L + 2\Delta\nu/\nu \; ; \qquad (2)$$

L is the length of the thread-like specimen. The method described here is highly accurate for several reasons: on the one hand the authors use an experimental arrangement which permits a precise (automatic) measurement of the frequency ν (frictionless suspension of the thread, excitation of the torsional oscillations by a magnetic field), on the other, the

Card 1/2

APPROVED FOR RELEASE: 09/17/2001 CIA-RDP86-00513R000722020016-1"

"APPROVED FOR RELEASE: 09/17/2001 CIA-RDP86-00513R000722020016-1

authors demonstrate that the unevoidable deviation of the thread shape from the cylindrical shape does not change relation (2). Proof: if the radius R of the thread is approximately expressed by a relation $R = R_o e^{\alpha|y|}$, the following relations hold:

$$\Delta G/G = \Delta L/L + \Delta S/S + 2\Delta\nu/\nu - \Delta R/R_o, \quad (13)$$

$$\Delta S/S = (1/\ln R/R_o - 4R_o^4/(R^4 - R_o^4))(\Delta R_o/R_o - \Delta R/R). \quad (16)$$

For $\Delta R_o/R_o = \Delta R/R = \Delta L/L$, $\Delta S/S = 0$ and formula (13) goes over into formula (2) for a molten quartz thread in the experimental arrangement described here. The authors mention G. I. Kazakov. There are 6 figures.

ASSOCIATION: Akademiya nauk UzSSR (Academy of Sciences Uzbekskaya SSR)

SUBMITTED: April 25, 1961

APPROVED FOR RELEASE: 09/17/2001 CIA-RDP86-00513R000722020016-1"

"APPROVED FOR RELEASE: 09/17/2001 CIA-RDP86-00513R000722020016-1

38151

S/196/62/000/010/009/035
E073/E155

5.4600

AUTHORS: Domoryad, I.A., and Khiznichenko, L.P.

TITLE: Method of measuring the elastic properties of irradiated materials

PERIODICAL: Referativnyy zhurnal, Elektrotekhnika i energetika, no.10, 1962, 12, abstract 10 B71. (Tr. Tashkentsk. konferentsii po mirn. ispol'zovaniyu atomn. energii, v.1, 1959, Tashkent, AN UzSSR, 1961, 284-285)

TEXT: Equipment is described for measuring the resonant frequency of the torsional vibrations of thin fibres of fused quartz exposed to penetrating radiation. The fluctuations were recorded by an optical system and photomultiplier. The influence of the oscillation amplitudes, the external pressure and the temperature on the resonant frequency was investigated. The equipment permits measuring the shear modulus of the material with an accuracy of 0.02%. It was found that exposure to γ-radiation with energies of 1.25 MeV and those of $8 \cdot 10^8$ roentgen increases the shear modulus of the fused quartz by 0.16%, which

Card 1/2

APPROVED FOR RELEASE: 09/17/2001 CIA-RDP86-00513R000722020016-1"

"APPROVED FOR RELEASE: 09/17/2001 CIA-RDP86-00513R000722020016-1

Method of measuring the elastic ... S/196/62/000/010/009/035
E073/E155

is attributed to partial crystallization of the fused quartz.
[Abstractor's note: Complete translation.]

Card 2/2

APPROVED FOR RELEASE: 09/17/2001 CIA-RDP86-00513R000722020016-1"

"APPROVED FOR RELEASE: 09/17/2001 CIA-RDP86-00513R000722020016-1

KHIZNYCHENKO, L. P.

90

SOV/6176

PHASE I BOOK EXPLOITATION

Konobeyevskiy, S. T., Corresponding Member, Academy of Sciences USSR, Resp. Ed.

Deystviye vadernykh izlucheniy na materialy (The Effect of Nuclear Radiation on Materials). Moscow, Izd-vo AN SSSR, 1962. 383 p. Errata slip inserted. 4000 copies printed.

Sponsoring Agency: Akademiya nauk SSSR. Otdeleniye tekhnicheskikh nauk; Otdeleniye fiziko-matematicheskikh nauk.

Resp. Ed.: S. T. Konobeyevskiy; Deputy Resp. Ed.: S. A. Adasinskiy; Editorial Board: P. L. Gruzin, G. V. Kurdyumov, B. M. Levitskiy, V. S. Lyashenko (Deceased), Yu. A. Martynyuk, Yu. I. Pokrovskiy, and N. F. Pravdyuk; Ed. of Publishing House: M. G. Makarenko; Tech. Eds: T. V. Polyakova and I. N. Dorokhina.

Card 1/14

APPROVED FOR RELEASE: 09/17/2001 CIA-RDP86-00513R000722020016-1"

"APPROVED FOR RELEASE: 09/17/2001 CIA-RDP86-00513R000722020016-1

90

SOV/6176

The Effect of Nuclear Radiation (Cont.)

PURPOSE: This book is intended for personnel concerned with nuclear materials.

COVERAGE: This is a collection of papers presented at the Moscow Conference on the Effect of Nuclear Radiation on Materials, held December 6-10, 1960. The material reflects certain trends in the work being conducted in the Soviet scientific research orginization. Some of the papers are devoted to the experimental study of the effect of neutron irradiation on reactor materials (steel, ferrous alloys, molybdenum, avial, graphite, and nichromes). Others deal with the theory of neutron irradiation effects (physico-chemical transformations, relaxation of internal stresses, internal friction) and changes in the structure and properties of various crystals. Special attention is given to the effect of intense γ-radiation on the electrical, magnetic, and optical properties of metals, dielectrics, and semiconductors.

Card 2/14

APPROVED FOR RELEASE: 09/17/2001 CIA-RDP86-00513R000722020016-1"

"APPROVED FOR RELEASE: 09/17/2001 CIA-RDP86-00513R000722020016-1

10

The Effect of Nuclear Radiation (Cont.) SOV/6176

Konozenko, I. D., and V. I. Ust'yanov. Effect of γ-Rays on Properties of CdS Single Crystals 318

Titov, P. P., A. K. Kikoin, and A. Ye Buzynov. Stimulating Action of X- and γ-Rays on Flotation Process 329

Byalobzheskiy, A. V., V. D. Val'kov, and V. N. Lukinskaya. Effect of Radiation on Corrosion Properties of Metals and Alloys 332

Galushka, A. P., P. G. Litovchenko, and V. I. Ust'yanov. Methods of Investigating Properties of Semiconductors Irradiated by γ-Quanta 341

Starodubtsev, S. V., S. A. Azizov, I. A. Domsryad, Ye. V. Peshikov, and L. P. Khiznichenko. Change in Mechanical Properties of Some Solids Subjected to γ-Radiation 347

Card 12/14

APPROVED FOR RELEASE: 09/17/2001 CIA-RDP86-00513R000722020016-1"

"APPROVED FOR RELEASE: 09/17/2001 CIA-RDP86-00513R000722020016-1

5.2400
5.4600

25716
S/020/61/139/003/015/025
B103/B226

AUTHORS: Starodubtsev, S. V., Academician AS Uzbekskaya SSR, Domoryad, I. A., and Khizniohenko, L. P.

TITLE: Change of the mechanical characteristics of amorphous selenium under the action of gamma rays

PERIODICAL: Akademiya nauk SSSR. Doklady, v. 139, no. 3, 1961, 594-595

TEXT: The present paper gives the results of a study of the effect of gamma rays upon the internal friction Q^{-1} and the shear modulus G of amorphous selenium, obtained from the logarithmic decrement and the frequency of torsional vibrations, respectively (see the authors' paper Ref. 1: Izv. AN UzSSR, ser. fiz., No. 4 (1961)). The data on the mechanical properties of selenium, especially the elastic properties of irradiated selenium, are not contained in the literature. Measurements were conducted with selenium threads drawn out of the melt. The fused-off ends of the specimens had a characteristic shape and served for holding the specimen. Thus, the point where the clamps were attached was prevented from friction. The length of the thread was 30 mm, its diameter

Card 1/4

APPROVED FOR RELEASE: 09/17/2001 CIA-RDP86-00513R000722020016-1"

"APPROVED FOR RELEASE: 09/17/2001 CIA-RDP86-00513R000722020016-1

20 - 100 μ. The longitudinal stress acting on specimens having different diameters was between 300 and 1500 g/mm^2. This is much less than the tensile strength of selenium threads (11 ± 1.5 kg/mm^2) found by the authors in a special test. The deformation of the specimens investigated did not exceed 10^{-5}. The specimens were irradiated in a Co^{60} apparatus with a dose of $700 \cdot 10^3$ r/hr. Fig. 1 shows the dependence of the relative change of the shear modulus G and of the internal friction Q^{-1} on the duration of irradiation. Therefrom, it can be seen that G of glass-like selenium increases monotonically with the dose up to saturation. In this case, the maximum change of the relative value $\Delta G/G$ amounts to 10 % at a dose of about $20 \cdot 10^6$ r, whereas Q^{-1} is changed more strongly, i.e., it decreases by 40 %. In order to clarify the radiative disturbances in selenium, the irradiated specimens were heated and kept at the given temperature for a certain time interval. Measurements were conducted at 17°C. The authors established that in the course of 10 days no notable annealing occurred. The properties of selenium are partially restored by subjecting the specimen to a temperature of 25°C for 15 min (Fig. 2); later on, however, the crystallization process probably goes on increasing. A further heating leads to a further increase of G [Abstracter's note: Text at the end of

APPROVED FOR RELEASE: 09/17/2001 CIA-RDP86-00513R000722020016-1"

"APPROVED FOR RELEASE: 09/17/2001 CIA-RDP86-00513R000722020016-1

p. 594 interrupted.] The radiative changes of G and Q^{-1} observed in amorphous selenium are apparently due to the peculiarities of its structure. At present, glass-like selenium is assumed to have a ring structure Se_8. While drawing threads the authors, however, established advantageous conditions for a predominating orientation of —Se—Se chains. Due to the varying speed of drawing and irregular cooling of the specimens at individual spots, a rupture of the chains, deformation of the rings, and different kinds of uncontrollable distortions occurred, whereby a non-equilibrium state in the structure of the thread was caused. As is shown by the experimental results, G is increased by gamma irradiation, while Q^{-1} is decreased. This corresponds, as it were, to the transition to a more equilibrated, crystalline state of the substance. Accordingly, the authors assume that the penetrating radiation compensates all possible distortions in glass-like selenium and, thus, arranges its structure. There are 2 figures and 2 Soviet-bloc references.

SUBMITED: April 21, 1961

Card 3/4

APPROVED FOR RELEASE: 09/17/2001 CIA-RDP86-00513R000722020016-1"

"APPROVED FOR RELEASE: 09/17/2001 CIA-RDP86-00513R000722020016-1

L 2440-66 EWP(e)/EPA(e)-2/EWT(m)/EPF(c)/EWP(i)/EPF(n)-2/EPA(w)-2/EWP(t)/EWP(b)/EWA(h)/EWA(1) IJP(c) JD/GG/GS/WH

ACCESSION NR: AT5023817 UR/0000/62/000/000/0347/0354

AUTHOR: Starodubtsev, S. V.; Azizov, S. A.; Domoryad, I. A.; Peshikov, Ye. V.; Khiznichenko, L. P.

TITLE: Change in the mechanical characteristics of certain solids exposed to gamma radiation

SOURCE: Soveshchaniye po probleme Deystviye yadernykh izlucheniy na materialy. Moscow, 1960. (Deystviye yadernykh izlucheniy na materialy (The effect of nuclear radiation on materials); doklady soveshchaniya. Moscow, Izd-vo AN SSSR, 1962, 347-354

TOPIC TAGS: gamma irradiation, quartz, shear modulus, irradiation effect, dielectric property, solid mechanical property

ABSTRACT: The effect of γ radiation on certain mechanical and dielectric properties of fused quartz fibers, Rochelle salt crystals, and ceramic barium titanate is studied. A 1.25 MEV Co^{60} γ source was employed at a dose rate of 10^6 r/hr. The shear modulus of fused quartz increases with the dose, and at 1.5×10^9 r, the change $\Delta G/G$ is 0.22% (± 0.02%). Gamma irradiation also changes the linear dimensions of fused quartz. These changes in elasticity

Card 1/2

APPROVED FOR RELEASE: 09/17/2001 CIA-RDP86-00513R000722020016-1"

"APPROVED FOR RELEASE: 09/17/2001 CIA-RDP86-00513R000722020016-1

L 2440-66

ACCESSION NR: AT5023817

and size may be satisfactorily explained by assuming a partial ordering (crystallization) of the lattice under the influence of γ rays. The observed effects of intense γ irradiation on the linear dimensions and "melting" point of Rochelle salt appear to be due to the destruction of the sample. The considerable effect of γ irradiation on the dielectric and elastic properties of $BaTiO_3$ ceramics are qualitatively similar to the aging process. The presence of healing at room temperature indicates that at least some of the defect centers (or new states of the domain walls) are unstable. Orig. art. has: 8 figures.

ASSOCIATION: none

SUBMITTED: 18Aug62 ENCL: 00 SUB CODE: NP, SS

NO REF SOV: 004 OTHER: 008

Silicon 27

Card 2/2 Nd

APPROVED FOR RELEASE: 09/17/2001 CIA-RDP86-00513R000722020016-1"

"APPROVED FOR RELEASE: 09/17/2001 CIA-RDP86-00513R000722020016-1

S/166/63/000/001/010/010
B107/B186

AUTHORS: Domoryad, I. A., Khizanichenko, L. P.

TITLE: Method of relative precision measurements for the shear of single crystals

PERIODICAL: Akademiya nauk Uzbekskoy SSR. Izvestiya. Seriya fiziko-matematicheskikh nauk, no. 1, 1963, 79 - 80

TEXT: A method is given for measuring the frequency of shear vibrations on single crystals with high precision. Platelets 35 x 2.5 x 0.1 mm were cut out of silicon and germanium single crystals. These were fastened in an aluminum cartridge and fixed vertically on a microscope stage. The upper narrow side of the platelet was illuminated. The shear vibrations were generated by a small electromagnetic hammer. The light pulses were passed through the microscope via a photomultiplier ФЭУ (FEU) to a loop oscilloscope, type H10 (N10). The time signals with a standard frequency of 1.000 cps were recorded by the oscilloscope at the same time. Five independent measurements of one specimen gave 2476, 2476, 2473, 2476, and 2478 cps. There is 1 figure.

Card 1/2

APPROVED FOR RELEASE: 09/17/2001 CIA-RDP86-00513R000722020016-1"

"APPROVED FOR RELEASE: 09/17/2001 CIA-RDP86-00513R000722020016-1

Method of relative precision ... S/166/63/000/001/010/010
B107/B186

ASSOCIATION: Fiziko-tekhnicheskiy institut AN UzSSR (Physicotechnical Institute AS UzSSR)

SUBMITTED: October 5, 1962

Card 2/2

APPROVED FOR RELEASE: 09/17/2001 CIA-RDP86-00513R000722020016-1"

"APPROVED FOR RELEASE: 09/17/2001 CIA-RDP86-00513R000722020016-1

ACCESSION NR: AP4044793 S/0166/64/000/003/0061/0066

AUTHOR: Domoryad, I. A.; Kromer, P. F.; Uteniyazov, Ye.; Khiznichenko, L. P.

TITLE: Inelastic phenomena in amorphous selenium

SOURCE: AN UzSSR. Izvestiya. Seriya fiziko-matematicheskikh nauk, no. 3, 1964, 61-66

TOPIC TAGS: selenium, amorphous selenium, polymer structure, creep, internal friction, selenium crystallization, selenium elasticity, activation energy

ABSTRACT: Like polymers, amorphous selenium consists of long molecules with interaction both between the chains and within each chain. If tension is applied to Se in the presence of heat, the molecules will orient themselves in the direction of the tension, resulting in elastic or inelastic displacements. The boundaries between the partially oriented chains of amorphous Se should behave like a viscous substance whose coefficient of viscosity decreases with increasing temperature. Under the appropriate conditions, it should therefore be possible to observe inelastic phenomena such as restorative creep under constant stress, relaxation of stress under constant strain, an elastic aftereffect following removal of the load, and internal friction, i.e. phenomena in which the strain and stress are not single-valued functions of one another in the pre-elastic region. In the present

Card 1/4

APPROVED FOR RELEASE: 09/17/2001 CIA-RDP86-00513R000722020016-1"

"APPROVED FOR RELEASE: 09/17/2001 CIA-RDP86-00513R000722020016-1

ACCESSION NR: AP4044793

paper, creep and stress relaxation were investigated by the method of torsional vibrations in fibers (30-60 μ x 30 mm) of amorphous Se. A straight-line relationship was obtained between the stress (as measured by the current flowing through a galvanometer) and the strain (as measured by the deflection of a mirror) at temperatures from -20 to +30C, indicating that the experiments were carried out in the range of elastic deformations. The creep curves shown in Fig. 1 of the Enclosure indicate that creep decreases with decreasing temperature. Mathematical expressions are developed for the relationship between creep and both temperature and time, and it is demonstrated that the ratio between the moduli of relaxation and elasticity is less than 1.0. Fig. 2 of the Enclosure shows the relaxation of stress under constant strain. Calculations revealed that the energy of activation for amorphous Se is on the order of 6200 cal./mol.; after incubation for 6-8 hrs. at 33C, however, the energy of activation increases to approximately 12000 cal./mol., due apparently to a partial transition from the amorphous to the crystalline state. Even this figure is low compared to the activation energy for metals, due to the linear polymeric structure of selenium. Orig. art. has: 6 figures and 5 formulas.

ASSOCIATION: Institut yadernoy fiziki AN UzSSR (Institute of Nuclear Physics, AN UzSSR)

SUBMITTED: 09Mar64 ENCL: 02 SUB CODE: MM, SS

Card 2/4 NO REF SOV: 004 OTHER: 001

APPROVED FOR RELEASE: 09/17/2001 CIA-RDP86-00513R000722020016-1"

"APPROVED FOR RELEASE: 09/17/2001 CIA-RDP86-00513R000722020016-1

ACCESSION NR: AP4044793

ENCLOSURE: 01

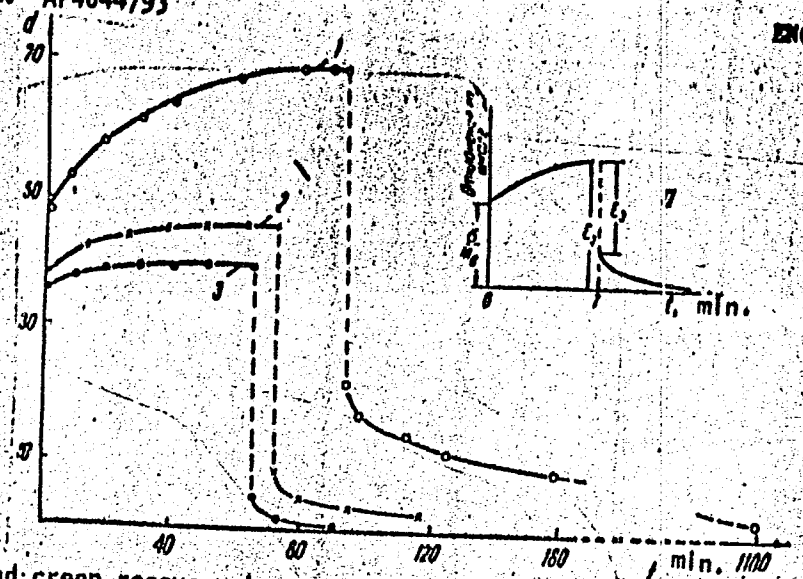

Fig. 1. Creep and creep recovery in amorphous selenium at: 1 - +20C; 2 - 0C; 3 - +20C. In both graphs, ordinate = scale deflection in mm, abscissa = time in minutes.

Card 3/4

APPROVED FOR RELEASE: 09/17/2001 CIA-RDP86-00513R000722020016-1"

"APPROVED FOR RELEASE: 09/17/2001 CIA-RDP86-00513R000722020016-1

ACCESSION NR: AP4044793

ENCLOSURE: 02

Fig. 2. Stress relaxation at constant strain: 1 - -24C; 2 - -5C; 3 - +5C.

Card 4/4

APPROVED FOR RELEASE: 09/17/2001 CIA-RDP86-00513R000722020016-1"

"APPROVED FOR RELEASE: 09/17/2001 CIA-RDP86-00513R000722020016-1

L 38877-66 EWT(m)/T/EWP(t)/ETI IJP(c) JD

ACC NR: AP6018562

SOURCE CODE: UR/0181/66/008/006/1924/1928

AUTHOR: Starodubtsev, S. V.; Kaypnazarov, D.; Khiznichenko, L. P.; Kromer, P. F.

ORG: Institute of Nuclear Physics, AN UzSSR, Tashkent (Institut yadernoy fiziki AN UzSSR)

TITLE: Low temperature internal friction in silicon 63

SOURCE: Fizika tverdogo tela, v. 8, no. 6, 1966, 1924-1928

TOPIC TAGS: silicon, internal friction, Young modulus, temperature dependence, low temperature research, crystal dislocation phenomenon, silicon single crystal

ABSTRACT: The purpose of the investigation was to determine the dislocation relaxation by measuring the internal friction and Young's modulus of silicon single crystals at low temperatures and low frequencies. Type KEF-250 silicon was tested at temperatures 77 to 300K and frequencies 80 to 400 Hz, in shich the dislocation density ranged from 10^4 to 10^5 cm^{-2}. The internal friction and Young's modulus were measured by the method of free flexural oscillations in vacuum. With increasing temperature Young's modulus decreases monotonically but the internal friction exhibits a peak superimposed on a monotonic growth. The internal-friction peak occurs at 105K for 85 Hz and shifts to higher temperatures with increasing frequency. The results yielded an activation energy of 0.162 ± 0.025 ev and a relaxation time $\approx 3 \times 10^{-11}$ sec. Reasons for differences between these values and those obtained by others are discussed. The ratio of the Peierls stress to the shear modulus in silicon is 1.5×10^{-5},

Card 1/2

APPROVED FOR RELEASE: 09/17/2001 CIA-RDP86-00513R000722020016-1"

"APPROVED FOR RELEASE: 09/17/2001 CIA-RDP86-00513R000722020016-1

L 38877-66

ACC NR: AP6018562

which is one order of magnitude smaller than in metals. The results are analyzed from the point of view of the theory of Seeger, Donth, and Pfaff (Discuss. Farad. Soc. v. 23, 19, 1957), and it is shown that there are grounds for assuming that this theory is not applicable to crystals with covalent bonds. Orig. art. has: 4 figures and 7 formulas.

SUB CODE: 20/ SUBM DATE: 12Jul65/ ORIG REF: 001/ OTH REF: 014

Card 2/2

APPROVED FOR RELEASE: 09/17/2001 CIA-RDP86-00513R000722020016-1"

"APPROVED FOR RELEASE: 09/17/2001 CIA-RDP86-00513R000722020016-1

KNIZHNIK, Z. B.

STARIKOVICH, S. K., and KNIZHNIK, Z. B. Facilitating Welding of Shells of Cylindrical Containers (Oblegcheniye Sborki Obedhayek pri Izgotovlenii Tsilindricheskikh Sosudov), pp. 17-19

A screw-clamp invented by V. F. Kalganov which allows a simultaneous setting of the necessary clearance and equal spacing between welded rims is described. (Drawings).

SO: PROMYSHLENNAYA ENERGETIKA, No. 10, Oct. 1952, Moscow (1502270)

APPROVED FOR RELEASE: 09/17/2001 CIA-RDP86-00513R000722020016-1"

"APPROVED FOR RELEASE: 09/17/2001 CIA-RDP86-00513R000722020016-1

KHIZHNYACHENKO, P.Y.

USKOV, A.A., geroy Sotsialisticheskogo Truda; DEGTYAREV, V.I.; POPOV, V.K.; GRACHEV, L.I.; KHIZHNYACHENKO, P.Ye.; KOZYUBERDA, A.F.; PISKUNOV, Ye.S., gornyy inzhener; SEDYKH, D.A.; SOROTOKIN, M.S.; DARCHIYA, L.V.; TANKILEVICH, A., gornyy inzhener.

Soviet miners celebrate Miner's Day with new achievements in production. Ugol' 29 no.8:5-20 Ag '54. (MIRA 7:8)

1. Glavnyy inzhener kombinata Rostovugol' (for Uskov). 2. Upravlyayushchiy trestom Chistyakovantratsit (for Degtyarev). 3. Upravlyayushchiy trestom Vakhrushevugol' (for Popov). 4. Upravlyayushchiy trestom Molotovugol' (for Grachev). 5. Nachal'nik shakhty "Zapadnaya-Kapital'naya" tresta Nesvetayantratsit (for Khizhnyachenko). 6. Nachal'nik shakhty No.7 tresta Nesvetayantratsit (for Kozyuberda). 7. Nachal'nik shakhty no.17-bis tresta Chistyakovantratsit (for Piskunov). 8. Nachal'nik shakhty no.1 "TSentral'naya" tresta Krasnoarmayskugol' (for Sedykh). 9. Upravlyayushchiy trestom Prokop'yevskshakhtostroy (for Sorotokin). 10. Nachal'nik Stroyupravleniya No.2 tresta Tkvarchelshakhtostroy (for Darchiya). 11. Ol'sherasskoye shakhtostroitel'noye upravleniye (for Tankilevich).
(Coal mines and mining)

APPROVED FOR RELEASE: 09/17/2001 CIA-RDP86-00513R000722020016-1"

"APPROVED FOR RELEASE: 09/17/2001 CIA-RDP86-00513R000722020016-1

KHIZHNYACHENKO, P.Ye.

Mixed work teams and single shift work schedules in the "Zapadnaia-Kapital'naia" mine. Mekh trud. rab. 9 no.6:9-13 Je '55. (MLRA 8:6)

1. Nachal'nik shakhty "Zapadnaya-Kapital'naya"
(Coal mines and mining)

APPROVED FOR RELEASE: 09/17/2001 CIA-RDP86-00513R000722020016-1"

"APPROVED FOR RELEASE: 09/17/2001 CIA-RDP86-00513R000722020016-1

KHIZHNYAK, A. A.

Dissertation: "Economic-Geographic Characteristics of the Lower Dnepr River Valley." Cand Geog Sci, Inst of Geography, Acad Sci USSR, 28 May 54. Vechernyaya Moskva, Moscow, 19 May 54.

SO: SUM 284, 26 Nov 1954

APPROVED FOR RELEASE: 09/17/2001 CIA-RDP86-00513R000722020016-1"

"APPROVED FOR RELEASE: 09/17/2001 CIA-RDP86-00513R000722020016-1

KHIZHNYAK, Andrey Andreyevich

4N/5
621.8
.K4

Nizhneye Pridneprov'ye; Ekonomikogeograficheskiy ocherk (lower pridneprov'ye; economic-geographic sketch) Moskva, Georgrafgiz, 1956.

77 p. Illus., Maps.

APPROVED FOR RELEASE: 09/17/2001 CIA-RDP86-00513R000722020016-1"

"APPROVED FOR RELEASE: 09/17/2001 CIA-RDP86-00513R000722020016-1

KHIZHNYAK, A. A.

14-57-6-12989

Translation from: Referativnyy zhurnal, Geografiya, 1957, Nr 6, p 166 (USSR)

AUTHORS: Khizhnyak, A. A., Alekseyev, M. O.

TITLE: Sands in the Region of Melitopol' (Piski rayonu m. Melitopolya--in Ukrainian)

PERIODICAL: Nauk. zap. Melitopol'sk. derzh. ped in-t, 1956, Vol 3, pp 175-182

ABSTRACT: The authors describe briefly 19 sand deposits, some of which have been worked. These sands are divided into three groups: 1) alluvial sands of the Molochnaya River valley; 2) marine sands of the Molochnaya and Tashchenak River valleys; 3) eolian sands of the interstream area between these rivers. As a rule, the eolian sands are harmful to agriculture, although under certain conditions they can be beneficial. Since the local sands are insufficient to meet all the area's

Card 1/2

APPROVED FOR RELEASE: 09/17/2001 CIA-RDP86-00513R000722020016

"APPROVED FOR RELEASE: 09/17/2001 CIA-RDP86-00513R000722020016-1

KHIZHNYAK, A.A.

KHIZHNYAK, A.A.

Biryuchiy Island. Izv. Vses. geog. ob-va 89 no.6:553-554 N-D '57.
(Biryuchiy island)
(MIRA 10:12)

APPROVED FOR RELEASE: 09/17/2001 CIA-RDP86-00513R000722020016-1"

"APPROVED FOR RELEASE: 09/17/2001 CIA-RDP86-00513R000722020016-1

KHIZHNYAK, Andrey Andreyevich [Khyzhniak, Andrii Andriiovych]; SHPORTYUK, V.I. [Shportiuk, V.I.], red.; PIPA, L.D. [Pypa, L.D.], red.kart; GORBUNOVA, N.M. [Horbunova, N.M.], tekhn.red.

[Zaporozh'ye Province; geographical study] Zaporiz'ka oblast'; geografichnyi narys. Kyiv, Derzh.uchbovo-pedagog.vyd-vo "Radians'ka shkola," 1959. 123 p. (MIRA 13:5)
(Zaporozh'ye Province--Geography)

APPROVED FOR RELEASE: 09/17/2001 CIA-RDP86-00513R000722020016-1"

"APPROVED FOR RELEASE: 09/17/2001 CIA-RDP86-00513R000722020016-1

KRUPSKIY, N.K.; ALEKSANDROVA, A.M.; KHIZHNYAK, A.I.

Determination of available aluminum in soils. Pochvovedenie no.10:93-96 O '61. (MIRA 14:9)

1. Ukrainskiy nauchno-issledovatel'skiy institut pochvovedeniya imeni A.N. Sokolovskogo.
(Soils—Aluminum content)

APPROVED FOR RELEASE: 09/17/2001 CIA-RDP86-00513R000722020016-1"

"APPROVED FOR RELEASE: 09/17/2001 CIA-RDP86-00513R000722020016-1

KHIZHNYAK, F.D.; BRATUS', A.D.

Contact less transmitters with magnetic amplifiers used instead of automatic flag breakers. Proizv.opyt v tiazh.mash.no.4:71-80 '56.
(Electric controllers) (Magnetic amplifiers) (MLRA 10:2)

APPROVED FOR RELEASE: 09/17/2001 CIA-RDP86-00513R000722020016-1"

"APPROVED FOR RELEASE: 09/17/2001 CIA-RDP86-00513R000722020016-1

KHIZHNYAK, G.D.

Rupture of the sigmoid intestine during defecation. Zdrav. Bel. 8 no.6:66-67 Je '62. (MIRA 16:8)

1. Iz Molodechnenskoy gorodskoy bol'nitsy (glavnyy vrach N.A.Moroz, zav. khirurgicheskim otdeleniyem M.A.Kuptyukh).
(COLON—RUPTURE) (DEFECATION)

APPROVED FOR RELEASE: 09/17/2001 CIA-RDP86-00513R000722020016-1"

"APPROVED FOR RELEASE: 09/17/2001 CIA-RDP86-00513R000722020016-1

SAIGANIK, V.A., inzh.; KHIZHNYAK, G.K., inzh.

Preventing injuries in deepening mine shafts. Bezop. truda v prom. 3 no.6:17-18 Je '59. (MIRA 12:10)

(Mining engineering--Safety measures)

APPROVED FOR RELEASE: 09/17/2001 CIA-RDP86-00513R000722020016-1"

"APPROVED FOR RELEASE: 09/17/2001 CIA-RDP86-00513R000722020016-1

MORENKOV, F.L., insh.; SALGANIK, V.A., insh.; KHIZHNYAK, G.K., insh.

Mining hoisting winch chambers during the deepening of rock-hoisting shafts. Shakht.stroi. 4 no.9:23-25 S '60. (MIRA 13:8)

1. Nauchno-issledovatel'skiy geologo-razvedochnyy institut.
(Shaft sinking) (Mine hoisting)

APPROVED FOR RELEASE: 09/17/2001 CIA-RDP86-00513R000722020016-1"

"APPROVED FOR RELEASE: 09/17/2001 CIA-RDP86-00513R000722020016-1

NIKULIN, V.M., kand. ekonom. nauk; KHIZHNYAK, L.T., inzh.; OGANEZOVA, S.Z., inzh.; VINARIK, L.S., inzh.

Optimum layout for glass using the linear programming method. Stek. i ker. 22 no.11:11-15 N '65. (MIRA 18:11)

APPROVED FOR RELEASE: 09/17/2001 CIA-RDP86-00513R000722020016-1"

"APPROVED FOR RELEASE: 09/17/2001 CIA-RDP86-00513R000722020016-1

INOPIN, Ye.V.; KAGANOV, M.I. [Kahanov, M.I.]; KRUGLIKH, A.A. [Kruhlykh, A.A.]; KHIZHNYAK, M.A. [Khyzhniak, M.A.]

Scientific conference of young scientists at the Physical and Technological Institute of the Ukrainian Academy of Sciences. Ukr. fiz. zhur. 4 no.3:406-408 My-Je '59. (MIRA 13:2)
(Physics--Congresses) (Technology--Congresses)

APPROVED FOR RELEASE: 09/17/2001 CIA-RDP86-00513R000722020016-1"

"APPROVED FOR RELEASE: 09/17/2001 CIA-RDP86-00513R000722020016-1

KHIZHNYAK, M.F.

Mineral raw materials supply base of the building materials industry in the Kharkov Economic Region. Sbor. trud. IUZHNII no.2:166-187 '59. (MIRA 13:9)

1. Glavnyy geolog tresta "Ukrgeolnerud".
(Kharkov Province--Building materials)

APPROVED FOR RELEASE: 09/17/2001 CIA-RDP86-00513R000722020016-1"

"APPROVED FOR RELEASE: 09/17/2001 CIA-RDP86-00513R000722020016-1

KHIZHNYAK, N.A.

DUSHIN, L.O.; KHIZHNYAK, N.A.

Application of power recuperation to linear accelerators. Ukr. fiz. zhur. 2 no.2:106-113 Ap-Je '57. (MIRA 10:6)

1. Fiziko-tekhnichniy institut Akademii nauk URSR.
(Particle accelerators)

APPROVED FOR RELEASE: 09/17/2001 CIA-RDP86-00513R000722020016-1"

"APPROVED FOR RELEASE: 09/17/2001 CIA-RDP86-00513R000722020016-1

KHIZHNYAK, N.A.

AUTHOR Khizhnyak, N.A.

TITLE Artificial Anisotropic Dielectrics. Part I. (Iskusstvennyye anizotropnyye dielektriki. I.) 57 - 9-12/40

PERIODICAL Zhurnal Tekhn. Fiz., 1957, Vol. 27, Nr 9, pp.2006-2013 (USSR)

ABSTRACT The anisotropic properties of an artificial dielectric which was formed by the regular lattice of the dispersing centers of any geometrical shape, are investigated. The dielectricity constant and magnetic permeability are expressed by the dispersion coefficients of the electromagnetic waves in the individual dispersing centers and by the quantities which characterize the geometrical properties of the space lattice and the orientation of the dispersing centers with respect to the lattice. It is assumed that the dimensions of the dispersing centers and those of the space lattice are small in comparison to the wavelength. A new method for the investigation of these dielectrics is here described, on the basis of which general formulae for the tensors of the dielectricity constant and of magnetic permeability are obtained. From these two formulae it may be seen that, in the general case, an artificial dielectric with a regular lattice of

CARD 1/2

APPROVED FOR RELEASE: 09/17/2001 CIA-RDP86-00513R000722020016-

the dispersing centers is an anisotropic medium, in which anisotropy can be due either to the anisotropic dispersion of the electromagnetic field by the dielectric particles or by the anisotropic structure of the lattice. The components of the tensors of the dielectricity constant and of magnetic permeability are in the general case certain frequency functions which determine the dispersive properties of the artificial dielectric. Transition from the space lattice of the dispersing centers to the artificial dielectric is nothing but the replacement of the discrete structure by a full medium which, in an electrodynamical respect, is equivalent to it.
There are 3 Slavic references.

ASSOCIATION: Physical-Technical Institute AN Ukrainian SSR, Kharkov. (Fiziko-tekhnicheskiy institut AN USSR, Khar'kov)

PRESENTED:

SUBMITTED: August 31, 1956.

AVAILABLE: Library of Congress.

CARD 2/2

"APPROVED FOR RELEASE: 09/17/2001 CIA-RDP86-00513R000722020016-1

Khizhnyak, N. A.

AUTHOR Khizhnyak, N. A.

TITLE Artificial Anisotropic Dielectrics. Part II. (Iskusstvennyye anisotropnyye dielektriki. II.) 57-9-13/40

PERIODICAL Zhurnal Tekhn. Fiz., 1957, Vol. 27, Nr 9, pp 2014-2026 (USSR)

ABSTRACT The anisotropy of artificial dielectrics, which is due to the anisotropic structure of the space lattice, is investigated. Tetragonal, orthogonal, hexagonal, and monoclinal lattices are investigated. The entire theory of artificial dielectrics dealt with here is based upon the assumption that the interaction between spherical particles has the character of a dipole. The method dealt with here makes it possible to obtain analytical formulae for the components of the tensors for the dielectricity constant and the magnetic permeability of the investigated artificial dielectrics with any degree of accuracy. The dispersing properties of an artificial dielectric formed by a regular lattice of spherical particles, in which dispersion is due only to the dependence of the dispersion coefficient upon frequency, is investigated. From the equations obtained it may be seen that even in those cases in which the dispersing particles

CARD 1/2

APPROVED FOR RELEASE: 09/17/2001 CIA-RDP86-00513R000722020016-

Artificial Anisotropic Dielectrics. Part. II. 57-9-13/40

are produced from nonmagnetic working substances, also a magnetic frequency exists besides electric frequency at high frequencies. Therefore the anisotropic dielectric under investigation is characterized not by three but by by six different resonance frequencies. This difference is not due to the anisotropic dispersion of the electromagnetic field by dielectric particles but by the anisotropic structure of the space lattice. In conclusion, the influence exercised by the losses of a high frequency power output in dielectric spheres upon the dispersing properties of the artificial dielectric is investigated. It is shown that, as the anisotropy of the dielectric is due to the structure of the space lattice all resonance curves have the same width for all resonance frequencies. There are 4 figures and 2 Slavic references.

ASSOCIATION: Physical-Technical Institute AN Ukrainian SSR, Kharkov. (Fiziko-tekhnicheskiy institut AN USSR, Khar'kov.)

SUBMITTED: August 31, 1956.

AVAILABLE: Library of Congress.

CARD 2/2

"APPROVED FOR RELEASE: 09/17/2001 CIA-RDP86-00513R000722020016-1

KHIZHNYAK, N.A.

FAYNBERG, Ya.B.; KHIZHNYAK, N.A.

Energy loss by a charged particle passing through a laminar dielectric. Zhur.eksp.i teor.fiz. 32 no.4:883-895 Ap '57. (MIRA 10:7)

1. Fiziko-tekhnicheskiy institut Akademii nauk Ukrainskoy SSR.
(Particles, Elementary) (Cherenkov radiation)

APPROVED FOR RELEASE: 09/17/2001 CIA-RDP86-00513R000722020016-1"

"APPROVED FOR RELEASE: 09/17/2001 CIA-RDP86-00513R000722020016-1

KHIZHNYAK, N.A., Cand Phys-Math Sci — (diss) "Certain problems of the electrodynamics of heterogenous media." Khar'kov, 1958. 12 pp (Phys-Tech Inst Acad Sci UkSSR). 100 copies.—Bibliography: pp 12 (KL,20-58, 93)

APPROVED FOR RELEASE: 09/17/2001 CIA-RDP86-00513R000722020016-1"

"APPROVED FOR RELEASE: 09/17/2001 CIA-RDP86-00513R000722020016-1

PHASE I BOOK EXPLOITATION SOV/4012

Akademiya nauk Ukrainskoy SSR. Otdeleniye fiziko-matematicheskikh nauk. Sessiya po mirnomu ispol'zovaniyu atomnoy energii

Trudy (Transactions of the Session on Peaceful Uses of Atomic Energy), Kiyev, Izd-vo AN Ukrainskoy SSR, 1958. 188 p. 2,500 copies printed.

Resp. Ed.: M. V. Pasechnik, Doctor of Physics and Mathematics; Editorial Board: A. K. Val'ter, Academician, Academy of Sciences Ukrainskaya SSR, O.F. Nemets, Candidate of Physics and Mathematics, M. V. Pasechnik, Doctor of Physics and Mathematics; Ed. of Publishing House: T. K. Remennik; Tech. Ed.: N. P. Bakhlina.

PURPOSE: This collection of articles is intended for physicists and scientific personnel working in nuclear research.

COVERAGE: The articles in this collection discuss linear proton accelerators, electron accelerators, electrostatic accelerators, magnetron lenses, the interaction of charged particles and neutrons with nuclei, the applications of tagged atoms in physics research, and experimental methods. Some of the articles are descriptions of already existing nuclear installations and experimental apparatus. No personalities are mentioned. There is a bibliography of Soviet and non-Soviet sources at the end of most of the articles.

Sinel'nikov, K.D., P.M. Zeydlits, A.M. Nekrashevich, L.I. Bolotin, Ya. S. Shutskever, B.S. Akshanov, N. Ye. Kovnak, K.A. Leontovich, A.I. Akhiyezer, I.M. Lifshits, Ya. B. Faynberg, L.N. Rozentsweyg (Deceased), G. Ya. Lyubarskiy, M.I. Kaganov, and L.R. Pargamanik. 20.5-Mev Linear Proton Accelerators 5

Sinel'nikov, K.D., P.M. Zeydlits, I.A. Grishayev, L. Zh. Kitayevskiy, A.I. Akhiyezer, Ya. B. Faynberg, N.P. Seliyanov, and S. A. Khizhnyak. Electron Accelerator with an Output Energy of 3.5 Mev 16

Val'ter, A.K., and A.A. Tsygikalo. A 4-Mev Electrostatic Accelerator for Precision Nuclear Measurements 24

Akshanov, B.S., and P.I. Strel'nikov. A 2.5-Mev Horizontal-Type Electrostatic Generator 35

Akhiyezer, A.I., and A.G. Sitenko. Interaction of Fast Deuterons With Nuclei 57

Klyucharev, A.P., A.K. Val'ter, and B. N. Yesel'son. Reaction of He^3 With Deuterons 64

Tsytko, S.P., and Yu. P. Antuf'yev. Gamma-Resonances in Reactions of Proton Capture by Silicon Isotopes and Energy Levels of the Nucleus 70

Vasetsian, R.A., and Ye. D. Fedchenko. Investigation of Elastic Scattering of 18.7-Mev Energy Protons on Nickel and Copper Nuclei 77

Val'ter, A.K., and M. Ya. Rossomakhina. Elastic Scattering of Neutrons by Nickel, Copper, Lead, Bismuth and Uranium Nuclei 80

Nemets, O.F., and M.V. Pasechnik. Neutron Spectrometer in the 0.7 to 3-Mev Energy Band 84

Barchuk, I.F., V.P. Vasetskiy, B.S. Konstantinov, O.F. Nemets, and M.V. Pasechnik. Spectra of Fast Neutrons Scattered by Atomic Nuclei 94

Batalin, V.A., N.S. Kopytin, G.S. Kryshtab, M.V. Pasechnik, and V. I. Strizhak. Nonelastic Scattering Cross Sections of Fast Neutrons 102

Akhiyezer, A.I., N.I. Akhiyezer, and G. Ya. Lyubarskiy. Effective Boundary Condition for Multiplying and Moderating Media Interface 107

Aleksandrov, B.N., B.I. Verkin, and B.G. Lazarev. Obtaining Pure Metals by Repeated Zonal Recrystallization and the Use of Radioactive Isotopes for Investigating the Mechanism of Refining Metal Impurities by This Method 119

Morgulis, N.D. Using the Radioactive Indicator Method in Investigations of Surface Phenomena Physics 138

Miselyuk, Ye. G., P.I. Baranskiy, and V. Ye. Kosenko. Using Radioactive Isotopes in Investigations of Condition and Distribution of Impurities in Germanium 140

Khizhnyak, N.A.

APPROVED FOR RELEASE: 09/17/2001 CIA-RDP86-00513R000722020016-1"