"APPROVED FOR RELEASE: 09/17/2001 CIA-RDP86-00513R000722130002-4

KHOTMAN, V. V.

Mining Engineering

Dissertation: "Investigation of the Intake Track of the 'D-35' Diesel." Cand Tech Sci, Moscow Inst of Mechanication and Electrification of Agriculture imeni V. M. Molotov, 2 Apr 54. (Vechernyaya Moskva Moscow 23 Mar 54)

SO: SUM 213, 20 Sep 1954

APPROVED FOR RELEASE: 09/17/2001 CIA-RDP86-00513R000722130002-4"

"APPROVED FOR RELEASE: 09/17/2001 CIA-RDP86-00513R000722130002-4

88469

S/056/60/039/006/062/063
B005/B063

24.6901

AUTHORS: Van Can-chan, Van Tsu-tszen, Veksler, V. I., Vrana, I., Din Da-tsao, Ivanov, V. G., Kim Khi In, Kladnitskaya, Ye.N., Kuznetsov, A. A., Nguyen Din Ty, Nikitin, A. V., Solov'yev, M. I., Khofmokl', T., Chen Lin-yan'

TITLE: Non-conservation of Parity in Strong Interaction Involving Strange Particles

PERIODICAL: Zhurnal eksperimental'noy i teoreticheskoy fiziki, 1960, Vol. 39, No. 6(12), pp. 1854-1856

TEXT: The authors wanted to obtain an experimental proof for the non-conservation of parity in strong interaction. The proof suggested by Solov'yev for the longitudinal polarisation of a Λ^0 hyperon produced in nuclear collisions served as experimentum crucis. A number of experiments at low and medium energies failed. This "Letter to the Editor" presents the preliminary results of experiments with nuclear collisions and high energies. An analysis has been made of the angular asymmetries in decays of Λ^0 hyperons produced in π^-p collisions at 7-8 Bev. A total of

Card 1/3

34,000 photographs were taken, 14,000 at 6.8 Bev/c and 20,000 at ~8 Bev/c. Altogether, 175 Λ^0 and 33 Λ^0 or K^0 particles were detected; the systematic error in the 208 events was ± 6 particles. The asymmetry in the Λ^0 decay was studied in the coordinate system shown in the accompanying figure. The asymmetry in the φ^* angular distribution is the up-down asymmetry ($\alpha\bar{P}_3$), that of θ^*_+ is the forward-backward asymmetry ($\alpha\bar{P}_1$), and that of ψ^* is the right-left asymmetry ($\alpha\bar{P}_2$). $\alpha\bar{P}_1$ was calculated from the formula $\alpha\bar{P}_1 = \frac{2}{N}\sum_{i=1}^{N}\cos\theta^*_i \pm \sqrt{3\left[1-(\alpha\bar{P})^2\right]}/N$, where α is the asymmetry factor of the Λ^0 hyperons in the case of total polarization ($\bar{P} = 1$); $\bar{P}_1$ is the mean polarization of Λ^0; θ^* is the angle between the Λ^0 decay proton and the direction of motion of the Λ^0 particle. The other asymmetries were calculated analogously. Results are collected in Table 2. Right-left and up-down asymmetries were not observed. The forward-backward asymmetry obtained may indicate the non-conservation of parity in strong interaction for strange particle production; however, the present stage of investigation does not exclude all errors. The investigations

Card 2/3

are being continued. There are 1 figure, 2 tables, and 8 references: 3 Soviet and 5 US.

ASSOCIATION: Ob"yedinennyy institut yadernykh issledovaniy (Joint Institute of Nuclear Research)

SUBMITTED: September 1, 1960

Table 2

p_{Λ^0}	N	$\alpha\bar{P}_1$	$\alpha\bar{P}_2$	$\alpha\bar{P}_3$
$400<p_{\Lambda^0}<1200$	104 104 + (4) 104 + (4) + (6)	−0,52 ± 0,15 −0,50 ± 0,13 −0,37 ± 0,13	0,00 ± 0,17 0,06 ± 0,16	0,22 ± 0,17 0,07 ± 0,16
$p_{\Lambda^0}>1200$	68 68 + (29)	−0,26 ± 0,19 −0,09 ± 0,17	0,14 ± 0,21 0,06 ± 0,17	0,24 ± 0,21 0,21 ± 0,17
Все p_{Λ^0}	172 172 + (33) 172 + (33) + (6)	−0,41 ± 0,12 −0,31 ± 0,12 −0,24 ± 0,12	0,05 ± 0,13 0,00 ± 0,12	0,11 ± 0,13 0,12 ± 0,12

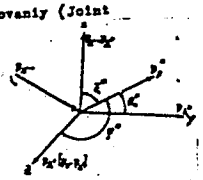

Card 3/3

APPROVED FOR RELEASE: 09/17/2001 CIA-RDP86-00513R000722130002-4"

"APPROVED FOR RELEASE: 09/17/2001 CIA-RDP86-00513R000722130002-4

BELYAKOV, V.A.; VAN YUN-CHAN [Wang Yung-ch'ang]; VEKSLER, V.I.; VIRYASOV, N.M.; VRANA, I.; DU YUAN'-TSAY [Tu Yuan-ts'ai]; KIM KHI IN; KLODNITSKAYA, Ye.N.; KUZNETSOV, A.A.; MIKHUL, E.; NGUYEN DIN TY; PATERA, I.; PENEV, V.N.; SOKOLOVA, Ye.S.; SOLOV'YEV, M.I.; KHOFMOKL', T.; CHEN LIN-YAN'; MIKHUL, A. [Mihul, A.]

Study of Λ-hyperon and K^0-meson production in $\pi^- p$-interactions at an energy of 7 - 8 Billion Electron Volts. Zhur.eksp. i teor. fiz. 44 no.2:431-443 F '63. (MIRA 16:7)

1. Ob"yedinennyy institut yadernykh issledovaniy. 2. Sotrudnik Instituta atomnoy fiziki v Bukhareste (for Mikhul).

APPROVED FOR RELEASE: 09/17/2001 CIA-RDP86-00513R000722130002-4"

"APPROVED FOR RELEASE: 09/17/2001 CIA-RDP86-00513R000722130002-4

VAN GAN-CHAN [Wang Kang-ch'ang]; VAN TSU-TSEN [Wang TS'u-tsêng]; VEKSLER, V.I.; VRANA, I.; DIN DA-TSAO [Ting Ta-ts'ao]; IVANOV, V.G.; KALDNITSKAYA, Ye.N.; KUZNETSOV, A.A.; NGUYEN DIN TY; NIKITIN, A.V.; SOLOV'YEV, M.I.; KHOFMOKL', T.; CHEN LIN-YAN'

Nonconservation of parity in strong interactions with participation of strange particles. Zhur. eksp. i teor. fiz. 39 no. 6:1854-1856 D '60. (MIRA 14:1)

1. Ob"yedinennyy institut yadernykh issledovatniy.
(Particles (Nuclear physics))

APPROVED FOR RELEASE: 09/17/2001 CIA-RDP86-00513R000722130002-4"

"APPROVED FOR RELEASE: 09/17/2001 CIA-RDP86-00513R000722130002-4

VEKSLER, V.I.; VIRYASOV, N.M.; VRANA, I.; KIM KH IN; KLADNITSKAYA, Ye.N.; KUZNETSOV, A.A.; NGUYEN DIN TY; SOLOV'YEV, M.I.; KHOFMOKL', T.; CHEN LIN-YAN'; SARANTSEVA, V.R., tekhn. red.

[Polarization of Λ-hyperons produced in π^--p-interactions at an energy of 7-8 Bev]Izuchenie poliarizatsii Λ-giperonov pri rozhdenii v π^--p-vzaimodeistviiakh s energiei 7-8 Bev. Dubna, Ob"edinennyi in-t iadernykh issl., 1962. 23 p. (MIRA 15:10)

(Hyperons—Decay) (Masons--Decay) (Protons)

APPROVED FOR RELEASE: 09/17/2001 CIA-RDP86-00513R000722130002-4"

"APPROVED FOR RELEASE: 09/17/2001 CIA-RDP86-00513R000722130002-4

KHOFMOKL', T.

5

S/056/63/044/001/017/067
B108/B100

AUTHORS: Veksler, V. I., Viryasov, N. M., Vrana, I., Kim Khi In, Klodnitskaya, Ye. N., Kusnetsov, A. A., Nguyen Din Sy, Solov'yev, M. I., Khofmokl', T., Chen Ling-yen

TITLE: The polarization of Λ-hyperons produced in π^-p-interactions at an energy of 7 - 8 Bev

PERIODICAL: Zhurnal eksperimental'noy i teoreticheskoy fiziki, v. 44, no. 1, 1963, 84 - 99

TEXT: 60000 photographs were examined of the interaction of π^--mesons of 7 - 8 Bev/c with protons in a 24-liter propane bubble chamber in a permanent magnetic field of 13,700 oe. Method and apparatus have already been described (Wang Kang-ch'ang, M. I. Solov'yev, Yu. N. Shkobin. PTE, 1, 41, 1959; M. I. Solov'yev, Proc. of the 1960 Ann. Int. Conf. on High Energy Physics at Rochester, p. 388; Wang Kang-ch'ang et al. ZhETF, 39, 1854, 1960). The Λ-hyperons were unpolarized during their production. This follows from the fact that there is no asymmetry in the angular distributions of the protons from the decay of the Λ-hyperons relative to the hyperon momentum. The angular distributions of the Λ-hyperon produc-

Card 1/2

APPROVED FOR RELEASE: 09/17/2001 CIA-RDP86-00513R000722130002-4"

"APPROVED FOR RELEASE: 09/17/2001 CIA-RDP86-00513R000722130002-4

The polarization of Λ-hyperons ... S/056/63/044/001/017/067
B108/B180

tion planes relative to the production planes of the K-mesons and pions are nearly isotropic. The results agree with the law of conservation of parity in strong interactions involving strange particles. There are 13 figures and 4 tables.

ASSOCIATION: Ob"yedinennyy institut yadernykh issledovaniy (Joint Institute of Nuclear Research)

SUBMITTED: July 31, 1962

Card 2/2

APPROVED FOR RELEASE: 09/17/2001 CIA-RDP86-00513R000722130002-4"

"APPROVED FOR RELEASE: 09/17/2001 CIA-RDP86-00513R000722130002-4

KHOFMOKL', T.

8

S/056/63/044/002/007/065
B102/B186

AUTHORS: Belyakov, V. A., Wang Yung Ch'ang, Vekslerr, V. I., Viryasov, N. M., Vrana, I., Tu Yüan-ts'ai, Kim Khi Ying, Kladnitskaya, Ye. N., Kuznetsov, A. A., Mikhul, E. Nguyen Din Ty, Patera, I., Penev, V. N., Sokolova, Ye. S., Solov'yev, M. I., Khofmokl', T., Cheng Ling-yen, Mikhul, A.

TITLE: Investigation of Λ-hyperon and K^0-meson production processes in $\pi^- p$ interactions at 7-8 Bev

PERIODICAL: Zhurnal eksperimental'noy i teoreticheskoy fiziki, v. 44, no. 2, 1963, 431-443

TEXT: The c.m.s. momentum and angular distributions determined for the Λ and K^0 particles produced in πp interactions are given and discussed. The measurements were made using a 24-liter propane bubble chamber in a field of 13,700 oe. The total momentum spectrum of the Λ-hyperons produced in the reactions

$$\pi^- + p \to \Lambda(\Sigma^0) + K^0 + n\pi, \quad (1)$$
$$\pi^- + p \to \Lambda(\Sigma^0) + K^0 + n\pi \quad (2)$$

Card 1/7

APPROVED FOR RELEASE: 09/17/2001 CIA-RDP86-00513R000722130002-4"

"APPROVED FOR RELEASE: 09/17/2001 CIA-RDP86-00513R000722130002-4

are shown in Fig. 1, compared with theoretical results. As it may be seen the statistical theory describes the experimental curve very well if the isobars and the cases with $p_p - p = \Delta < 700$ Mev are neglected.

$\Delta < 700$ Mev corresponds to ~30% of all Λ, these being produced in peripheral interactions. The Λ angular distribution has a distinct backward peak ($\bar{n}_{\Lambda}/\bar{n}_{\Lambda} = 0.18 \pm 0.02$). With increasing multiplicity n_s the agreement between experiment and statistical theory improves. The Λ angular distribution and the distribution with respect to $p_{\perp}$ is virtually independent of n_s. The overall mean of the transverse momentum is 363 ± 12 Mev/c; for $\Delta < 700$ Mev, $\bar{p}_{\Lambda_{\perp}} = 295 \pm 14$ Mev/c and for $\Delta \geqslant 700$ Mev, $\bar{p}_{\Lambda_{\perp}} = 432 \pm 18$ Mev/c. For the $K^0(\bar{K}^0)$ mesons produced in the reactions

APPROVED FOR RELEASE: 09/17/2001 CIA-RDP86-00513R000722130002-4"

"APPROVED FOR RELEASE: 09/17/2001 CIA-RDP86-00513R000722130002-4

$$\pi^- + p \rightarrow \begin{cases} K^0 + \Lambda(\Sigma^0) + n\pi, & (1) \\ K^0 + \bar{K}^0 + N + n\pi, & (3) \\ K^0 + K^- + N + n\pi, & (4) \\ \bar{K}^0 + K^+ + N + n\pi, & (5) \\ K^0 + \Sigma^{\pm} + n\pi. & (6) \end{cases}$$

the total momentum spectrum measured (Fig. 4) is weaker than that calculated according to the statistical theory. The angular distribution (Fig. 5) has, besides the isotropic part, a forward peak ($\bar{n}_{K^0}/\hat{n}_{K^0} = 1.61 \pm 0.15$). The forward-backward ratio decreases with increasing n_s. For the charged pions arising in Λ-production events the momentum distributions are, for $p_\pi^* \geqslant 400$ Mev/c, well described by the statistical theory without taking the isobars into account; for $p_\pi^* < 400$ Mev/c it is higher than that obtained from theory. The angular distributions for $n_s = 2, 4, 6$ are characterised by

APPROVED FOR RELEASE: 09/17/2001 CIA-RDP86-00513R000722130002-4"

"APPROVED FOR RELEASE: 09/17/2001 CIA-RDP86-00513R000722130002-4

$\vec{n}_{\pi^+}/\overleftarrow{n}_{\pi^+} = 1.10 \pm 0.12$, $\vec{n}_{\pi^-}/\overleftarrow{n}_{\pi^-} = 1.40 \pm 0.13$.

The mean number of π^0 mesons produced per π^-p interaction with Λ production is 1.23 ± 0.14. The angular distribution of π^- arising in stars with K^0 production has a flat forward maximum ($\vec{n}_{\pi^-}/\overleftarrow{n}_{\pi^-} = 1.10 \pm 0.10$). The mean number of charged particles produced together with Λ is $n_s = 2.22 \pm 0.13$ which agrees closely with the statistical theory without the isobars. The main part of Λ and K^0 is produced in two-pronged stars. The admixture of $K^0\Sigma^{\pm}$ pairs amounts to less than 20% of the number of $K^0K^- + K^0K^+$ pairs. The momentum distribution of charged pions from π^-p interactions with Λ-hyperon production are characterised by $\bar{p}^{\Lambda}_{\pi^+} = 425 \pm 16$ Mev/c and $\bar{p}^{\Lambda}_{\pi^-} = 444 \pm 15$ Mev/c. From a comparison of these angular distributions it is concluded that processes involving ΛK or $K\bar{K}$ pair production are more central than the usual processes of multiple pion production. If one divides the π^-p interactions with strange particle production into head-on

APPROVED FOR RELEASE: 09/17/2001 CIA-RDP86-00513R000722130002-4"

"APPROVED FOR RELEASE: 09/17/2001 CIA-RDP86-00513R000722130002-4

and peripheral collisions one can say that those involving $K\bar{K}$ pair production are rather of the head-on type than those with ΛK pair production. There are 15 figures and 2 tables.

ASSOCIATION: Ob"yedinennyy institut yadernykh issledovaniy (Joint Institute of Nuclear Research)

SUBMITTED: July 31, 1962

Fig. 1. Total momentum spectrum of hyperons; dashed line: without correction for recording probability; shaded area: events with Δ < 700 Mev; curves obtained from statistical theory with (I) and without (II) isobars, and without the events with Δ < 700 Mev (II').

Fig. 4. K^0 total momentum spectrum.

Fig. 5. K^0 total angular distribution.

APPROVED FOR RELEASE: 09/17/2001 CIA-RDP86-00513R000722130002-4"

"APPROVED FOR RELEASE: 09/17/2001 CIA-RDP86-00513R000722130002-4

BELYAKOV, V.A.; VAN YUN-CHAN [Wang Yung ch'ang]; VEKSLER, V.I.; VIRYASOV, N.M.; VRANA, I.; DU YUAN'-TSAY [Tu Yuan ts'ai]; KIM KHI IN; KLADNITSKAYA, Ye.N.; KUZNETSOV, A.A.; MIKHUL, E.; NGUYEN, DIN TY; PATERA, I.; PENEV, V.N.; SOKOLOVA, Ye.S.; SOLOV'YEV, M.I.; KHOFMOKL', T.; MIKHUL, A.

[Production of Λ-hyperons and K^0-mesons in π^-p-interactions at an energy of 7-8 Bev] Issledovanie protsessov rozhdeniia Λ-giperonov i K^0-mezonov v π^-p- vzaimodeistviiakh pri energii 7-8 Bev. [n.p. n.d.] 26 p. (MIRA 16:10)

(Mesons) (Hyperons)

APPROVED FOR RELEASE: 09/17/2001 CIA-RDP86-00513R000722130002-4"

"APPROVED FOR RELEASE: 09/17/2001 CIA-RDP86-00513R000722130002-4

VEKSLER, V.I.; VIRYASOV, N.M.; VRANA, I.; KIM KHI IN; KLADNITSKAYA, Ye.N.; KUZNETSOV, A.A.; NGUYEN DIN TY; SOLOV'YEV, M.I.; KHOFMOKL', T.; CHEN LIN-YAN'

Polarization of Λ-hyperons produced in π^-p-interactions at an energy of 7 - 8 Bev. Zhur. eksp. i teor. fiz. 44 no.1: 84-99 Ja '63. (MIRA 16:5)

1. Ob"yedinennyy institut yadernykh issledovaniy.
(Hyperons) (Mesons) (Nuclear reactions)

APPROVED FOR RELEASE: 09/17/2001 CIA-RDP86-00513R000722130002-4"

"APPROVED FOR RELEASE: 09/17/2001 CIA-RDP86-00513R000722130002-4

BELYAKOV, V.A.; VEKSLER, V.I.; VIRYASOV, N.M.; VRANA, I.; KIM KHI IN; KLODNITSKAYA, Ye.N.; KUZNETSOV, A.A.; MIKHUL, A.; NGUYEN DIN TY; SOLOV'YEV, M.I.; KHOFMOKL', T.; CHEN LIN-YAN'

Production of Λ-hyperons by 7-8 Bev. negative π-mesons on hydrogen. Zhur. eksp. i teor. fiz. 45 no.2:88-89 Ag '63. (MIRA 16:9)

1. Ob"yedinennyy institut yadernykh issledovaniy.
(Hyperons) (Mesons)
(Nuclear reactions)

APPROVED FOR RELEASE: 09/17/2001 CIA-RDP86-00513R000722130002-4"

"APPROVED FOR RELEASE: 09/17/2001 CIA-RDP86-00513R000722130002-4

KHOFSHTADTER, R. [Hofstadter, R.]

Structure of nuclei and nucleons. Usp. fiz. nauk 81 no.1:185-200 S '63. (MIRA 16:12)

APPROVED FOR RELEASE: 09/17/2001 CIA-RDP86-00513R000722130002-4"

"APPROVED FOR RELEASE: 09/17/2001 CIA-RDP86-00513R000722130002-4

KHOKESH, E.S. [Kokes, E.S.] (Praga)

Hunting with birds. Priroda 52 no.9:112-114 '63. (MIRA 16:11)

APPROVED FOR RELEASE: 09/17/2001 CIA-RDP86-00513R000722130002-4"

"APPROVED FOR RELEASE: 09/17/2001 CIA-RDP86-00513R000722130002-4

S/144/62/000/006/007/009
D230/D308

9,4310

AUTHORS: Khersdorf, L. and Kholkh, G.

TITLE: Response of transistors to weak signals in the temperature range -60° to +60°C

PERIODICAL: Izvestiya vysshikh uchebnykh zavedeniy. Elektromekhanika, no. 6, 1962, 650-658

TEXT: Amplifying and power p-n-p type transistors are investigated; circuits with a common base and a common emitter represent the main subject of the work. The parameters were determined by a bridge method at a frequency of 800 c/s. h and h' parameters for signal and power amplifying transistors OC16 and OC811 respectively (OS16 and OS811) are determined and discussed; the parameter values are related to 20°C. Current, voltage, power and input impedance data are given. Both power and signal transistor measurements were made with 100 ohm and 10 kohm load resistances. It is concluded that in the pre-amplifying stages in which large and possibly temperature-independent current amplification is possible, a working

Card 1/2

APPROVED FOR RELEASE: 09/17/2001 CIA-RDP86-00513R000722130002-4"

"APPROVED FOR RELEASE: 09/17/2001 CIA-RDP86-00513R000722130002-4

point with high current density should be selected. Large and temperature-independent power amplification is possible at relatively low current densities. It is noted that, for the purpose of design, the above conclusions cannot, as yet, be fully relied on. The most suitable working point can be found only when account is taken of its effect on (a) the klirr factor, (b) the input and output impedances, (c) cut-off frequency and (d) absolute values of these magnitudes. There are 2 tables and 12 figures.

ASSOCIATION: Higher Electrotechnical School, Ilmenau, East Germany

SUBMITTED: November 1, 1961

APPROVED FOR RELEASE: 09/17/2001 CIA-RDP86-00513R000722130002-4"

"APPROVED FOR RELEASE: 09/17/2001 CIA-RDP86-00513R000722130002-4

VENGEROVSKIY, I.S., professor; KHOKH, O.I.

Intra-osseous evipal anesthesia in children. Khirurgiia 32 no.3: 24-25 Mr '56. (MLRA 9:7)

1. Iz kliniki detskoykhirurgii (zav.-prof. I.S.Vengerovskiy) Tomskogo meditsinskogo instituta.
(ANESTHESIA, LOCAL,
intra-osseous in child. (Rus))

APPROVED FOR RELEASE: 09/17/2001 CIA-RDP86-00513R000722130002-4"

"APPROVED FOR RELEASE: 09/17/2001 CIA-RDP86-00513R000722130002-4

KHOKH, O.I.

Acute osteomyelitis of the body of the third cervical vertebra in an 8-day-old child. Vest. oto-rin. 19 no.1:97-98 Ja-F '57 (MLRA 10:4)

1. Iz kliniki detskoy khirurgii (zav.-prof. I.S. Vengerovskiy) Tomskogo meditsinskogo instituta i Tomskoy detskoy gorodskoy bol'nitsy.

(OSTEOMYELITIS, in infant and child, cervical vertebra in newborn) (Rus)
(SPINE, diseases, osteomyelitis of cervical vertebra in newborn) (Rus)
(INFANT, NEWBORN, diseases, osteomyelitis of cervical vertebra) (Rus)

APPROVED FOR RELEASE: 09/17/2001 CIA-RDP86-00513R000722130002-4"

"APPROVED FOR RELEASE: 09/17/2001 CIA-RDP86-00513R000722130002-4

KHOKH, O.I.

A case of multiple pebbles in the intestine of a four-year old child [with summary in English]. Pediatriia, 36 no.10:69-70 O'58 (MIRA 11:11)

1. Iz kliniki detskoy khirurgii (zav. kafedroy - prof. I.S. Vengerovskiy) Tomskogo meditsinskogo institut i Tomskoy detskoy gorodskoy bol'nitsy (glavnyy vrach K.G. Bubnova).

(INTESTINES, calculi
multiple pebbles in four-year old child (Rus))

APPROVED FOR RELEASE: 09/17/2001 CIA-RDP86-00513R000722130002-4"

"APPROVED FOR RELEASE: 09/17/2001 CIA-RDP86-00513R000722130002-4

KHOKHA, V. (Kazakhskaya SSR)

Granite stoves. Sel'. stroi. 13 no.6:7 Je '58. (MIRA 11:6)
(Stoves) (Granite)

APPROVED FOR RELEASE: 09/17/2001 CIA-RDP86-00513R000722130002-4"

"APPROVED FOR RELEASE: 09/17/2001 CIA-RDP86-00513R000722130002-4

KHOKHALEV, Yu.S. (Leningrad, Nevskiy pr., d.92,kv.47)

Changes in external respiration during the first hours following pulmonary surgery. Vest.khir. 89 no.9:32-35 S '62. (MIRA 15:12)

1. Iz kafedry anesteziologii i I-y khirurgicheskoy kliniki usovershenstvovaniya vrachey (nachal'nik - prof. P.A. Kupriyanov) Voyenno-meditsinskoy ordena Lenina akademii imeni S.M.Kirova.

(RESPIRATION) (LUNGS--SURGERY)

APPROVED FOR RELEASE: 09/17/2001 CIA-RDP86-00513R000722130002-4"

"APPROVED FOR RELEASE: 09/17/2001 CIA-RDP86-00513R000722130002-4

KHOKHANENKO, P.N.; GRIGORUK, L.V.

Absorption spectra of excess silver in the low- and high-temperature modifications of silver iodide. Zhur.eksp. i teor. fiz. 29 no.5:676-679 N '55. (MLRA 9:2)

1.Sibirskiy fiziko-tekhnicheskiy institut pri Tomskom gosudarstvennom universitete.
(Silver iodide--Spectra)

APPROVED FOR RELEASE: 09/17/2001 CIA-RDP86-00513R000722130002-4"

"APPROVED FOR RELEASE: 09/17/2001 CIA-RDP86-00513R000722130002-4

KHOKHARIN, A. Kh.

KHOKHARIN, A. Kh. -- Investigation of the Conditions of a Steel Graded Column Subject to Off-Center Compression Within Its Elastic Limit." Sub 17 Jun 52, Central Sci Res Inst of Industrial Structures (TsNIPS). (Dissertation for the Degree of Candidate in Technical Sciences).

SO: Vechernaya Moskva, January December 1952

APPROVED FOR RELEASE: 09/17/2001 CIA-RDP86-00513R000722130002-4"

"APPROVED FOR RELEASE: 09/17/2001 CIA-RDP86-00513R000722130002-4

KHOKHARIN, A. Kh.

"Application of the Method of Academician A. N. Krylov to the Calculation of a Special Tridimensional Frame Structure".
Issled. po teorii sooruzheniy, M., gos. izd-vo lit. po str-vu i arkhitekture, Vol, 3, No 6, pp 449-454, 1954.

"Gives a calculation of a frame system, consisting of two concentrically located circular beams, fastened (with the aid of corner plates) in equal spacings according to the circuference with ten straight radial beams (spokes). (RZhMekh, No 8, 1955)

SO: Sum No 812, 6 Feb 1956

APPROVED FOR RELEASE: 09/17/2001 CIA-RDP86-00513R000722130002-4"

"APPROVED FOR RELEASE: 09/17/2001 CIA-RDP86-00513R000722130002-4

SOV/124-57-8-9530

Translation from: Referativnyy zhurnal. Mekhanika, 1957, Nr 8, p 136 (USSR)

AUTHORS: Belenya, Ye. I., Khokharin, A. Kh.

TITLE: A Study of the Stress Distribution in Steel Columns Subjected to an Eccentric Load of the Type Created by a Crane (Izucheniye napryazhennogo sostoyaniya stal'nykh kolonn pri zagruzhenii ikh vnetsentrenno prilozhennoy kranovoy nagruzkoy)

PERIODICAL: V sb.: Issledovaniya po stal'nym konstruktsiyam. Moscow, 1956, pp 97-157

ABSTRACT: The stress distribution in the stepped composite I-beam steel columns forming a part of the bents of industrial shops is investigated for a case wherein the columns are supporting a crane, the crane representing an eccentric vertical load upon them. In their investigation hereof the authors take into account the axial stresses X_x, the normal stresses V_y [sic! Probably intended to read Y_y. Tr. Ed. Note.] (perpendicular to the axial stresses), the tangential stresses X_y, and the local stresses. All the stresses in the columns are considered as falling within the elastic range. The bending-moment distribution curve resolves into two distribution curves, and the investigation of a column

Card 1/5

APPROVED FOR RELEASE: 09/17/2001 CIA-RDP86-00513R000722130002-4"

"APPROVED FOR RELEASE: 09/17/2001 CIA-RDP86-00513R000722130002-4

as a frame member reduces to the investigation of a cantilever-type column. The authors dissect the I-column into free bodies consisting of the web and the semiflanges and then substitutes the balancing interacting forces at the dissection surfaces to maintain the equilibrium of the respective elements. This makes it possible to reduce the problem of analyzing a column into the three separate problems of the generalized plane-stress distribution in the column's web and flanges. Each of these three problems is solved with the aid of a suitably selected stress function and suitably selected boundary and equilibrium conditions. Each of the three solutions obtained contains unknown coefficients, which are determined from the strain-continuity conditions assumed to obtain at those narrow regions where the web adjoins the flanges and where the two semiflanges (of which each flange is deemed to consist) adjoin each other. In consequence, a determination is made of the stresses X_x, Y_y, and X_y at different points of the lower part of the cantilever column, i. e., the part that is underneath the crane, for a case in which the edge face of the flange at the column's step shoulder is subjected to a uniformly distributed vertical pressure (i. e., the basic load). The influence exerted by that portion of the column situated above the step is not taken into account. It is pointed out that the stresses arising in a cantilever column being acted upon by the reactive force of a chord member of the frame can be found in the same manner. Analysis revealed that the distribution

APPROVED FOR RELEASE: 09/17/2001 CIA-RDP86-00513R000722130002-4"

"APPROVED FOR RELEASE: 09/17/2001 CIA-RDP86-00513R000722130002-4

throughout the column cross section of the axial stresses X_x resulting from the aforedescribed vertical load is nonlinear. Although the authors declare that these stresses attain their maximum values at intermediate heights of the column, according to Figure 5a of their paper the maximum X_x stress, which corresponds to the ordinate 1.0361q of the stress-distribution curve, occurs at the base restraint of the column. Also, whereas the authors assert that the Y_y and X_y stresses attain their respective maxima at the extremes of the column height, it would appear from Figures 5b and 5c that these stresses actually attain their maxima in the vicinity of the upper end of the column. The stress distribution in the web of a stepped I-column loaded along the edge faces of its flanges at the column step shoulders is first investigated optically, in experiments with photoelastic celluloid models. The experiments showed a considerable concentration of the principal shearing stresses in the zone of load application and another appreciable concentration thereof at the base of the column. The X_x, Y_y, and X_y web stresses as calculated theoretically are qualitatively compared with these same stresses as determined experimentally by the optical method. In the authors' opinion the two distribution patterns match up fairly well. Next, a description is given of tests made on five steel models of stepped I-columns and on two stepped I-columns of the steel skeleton of a full-scale factory-shop model; the results of these tests are

APPROVED FOR RELEASE: 09/17/2001 CIA-RDP86-00513R000722130002-4"

"APPROVED FOR RELEASE: 09/17/2001 CIA-RDP86-00513R000722130002-4

SOV/124-57-8-9530

A Study of the Stress Distribution in Steel Columns Subjected to an Eccentric (cont.)

discussed in detail. Each of the columns in question, belonging to a unit consisting of two cross frames, underwent various tests, until finally, treated as a cantilever beam, it was subjected to gradually increased loads until it failed. In their analysis of the axial stresses X_x, as measured in each column, the authors examine the components of these stresses produced by the column's various geometrical deviations from that absolute straightness of contour which, ideally, columns are supposed to have The pattern of the axial-stress distribution through the column cross section as observed in the experiments is substantially at variance with the stress-distribution pattern as calculated with the authors' two-term formula. The discrepancy between the stresses measured in the column's outer fibers and the maximum stresses anticipated on the basis of the theory averages 23-34%. The authors infer from their experiments that a column may pass into the elastic-plastic state much sooner than is predicted by the formula given in NiTU 121-55 [Normy i tekhnicheskiye usloviya proyektirovaniya stal'nykh konstruksiy (Standards and Technical Specifications for the Designing of Steel Structures)]. The nonlinear relationship which the authors observe between the external load and the magnitude of the X_x stresses is attributed by them to the abovementioned deviations from the ideal geometrical straightness of the columns. The actual distribution of the X_x stresses in a real column does not obey the law of plane sections. Transversely placed

Card 4/5

APPROVED FOR RELEASE: 09/17/2001 CIA-RDP86-00513R000722130002-4"

"APPROVED FOR RELEASE: 09/17/2001 CIA-RDP86-00513R000722130002-4

diaphragms and stiffening ribs do affect considerably the stress distribution in a column's web. The necessity is noted for taking into account the Y_y stresses in analyzing local web stability. The maximum X_y stresses are observed to occur in the vicinity of the region of load application. So far as the web is concerned, it is proposed that for the purposes of a first approximation the X_y stresses therein be assumed to equal 20% of the X_x stresses. An analysis is made of the Y_y and X_y stresses in the flangesof the columns, it being suggested that of the two only the Y_y stresses be taken into account in the analysis of a stressed flange. An analysis is made also of the local stresses present in the capital of a column. The structural correctness of the various shapes imparted to the column shoulders in current design practice is confirmed. The authors formulate conclusions with respect to such matters as in which of the frame members, and to what extent, one should and should not allow for the Y_y and X_y stresses in analyzing columns, by what amount a column's bearing capacity is diminished by the operation of such factors as non-uniform stress distribution, a compound-stress condition, etc. The paper contains typographical errors and editorial inaccuracies.

K. M. Khuberyan

APPROVED FOR RELEASE: 09/17/2001 CIA-RDP86-00513R000722130002-4"

"APPROVED FOR RELEASE: 09/17/2001 CIA-RDP86-00513R000722130002-4

APPROVED FOR RELEASE: 09/17/2001 CIA-RDP86-00513R000722130002-4"

"APPROVED FOR RELEASE: 09/17/2001 CIA-RDP86-00513R000722130002-4

KHOKHARIN, A.Kh.

Technical specifications for designing construction elements made of aluminum alloys. Stroi.mekh.i rasch.soor. 1 no.6: 50-52 '59. (MIRA 13:4)

(Aluminum alloys)

APPROVED FOR RELEASE: 09/17/2001 CIA-RDP86-00513R000722130002-4"

"APPROVED FOR RELEASE: 09/17/2001 CIA-RDP86-00513R000722130002-4

BALDIN, V.A.; TARANOVSKIY, S.V., prof., doktor tekhn.nauk; KHOKHARIN, A.Kh., kand.tekhn.nauk; BROUDE, B.M., doktor tekhn.nauk; CHUVIKIN, G.M., kand.tekhn.nauk; GURARI, M.D., inzh. [deceased]; LOKSHIN, Ye.E., kand.tekhn.nauk; KOVAL'CHUK, M.F., inzh., red.; STRASHNYKH, V.P., red.izd-va; RYAZANOV, P.Ye., tekhn.red.

[Technical specifications SN 113-60 for designing elements made of aluminum alloys] Tekhnicheskie usloviia proektirovaniia konstruktsii iz aliuminievykh splavov, SN 113-60. Moskva, Gos. izd-vo lit-ry po stroit., arkhit. i stroit.materialam, 1960. 86 p. (MIRA 14:6)

1. Russia (1923- U.S.S.R.) Gosudarstvennyy komitet po delam stroitel'stva. 2. TSentral'nyy nauchno-issledovatel'skiy institut stroitel'nykh konstruktsiy Akademii stroitel'stva i arkhitektury SSSR (for Taranovskiy, Khokharin, Broude, Chuvikin). 3. Chlen-korrespondent Akademii stroitel'stva i arkhitektury SSSR (for Baldin). 4. Gosudarstvennyy proyektnyy institut Proyektstal'konstruktsiya Glavstroyproyekta pri Gosstroye SSSR (for Gurari, Lokshin).
(Aluminum alloys)

APPROVED FOR RELEASE: 09/17/2001 CIA-RDP86-00513R000722130002-4"

"APPROVED FOR RELEASE: 09/17/2001 CIA-RDP86-00513R000722130002-4

KHOKHARIN, A.Kh., kand.tekhn.nauk

Experimental testing of the performance of a prestressed steel support for 400 kv electric transmission lines. Prom stroi 37 no.5:40-44 My '59. (MIRA 12:7)
(Electric lines--Poles) (Steel, Structural--Testing)

APPROVED FOR RELEASE: 09/17/2001 CIA-RDP86-00513R000722130002-4"

"APPROVED FOR RELEASE: 09/17/2001 CIA-RDP86-00513R000722130002-4

MASONOV, V.N., BELYAYEV, B.I., BALDIN, V.A., TARANOVSKIY, S.V., KHOKHARIN, A.Kh.

Possibilities of using aluminum and alluminum alloys in construction. Prom. stroi. 38 no.8:36-39 '60. (MIRA 13:8)
(Alluminum alloys) (Aluminum, Structural)

APPROVED FOR RELEASE: 09/17/2001 CIA-RDP86-00513R000722130002-4"

"APPROVED FOR RELEASE: 09/17/2001 CIA-RDP86-00513R000722130002-4

TARANOVSKIY, S.V., prof., doktor tekhn. nauk; KHOKHARIN, A.Kh., kand. tekhn. nauk; VILKOV, G.N., red. izd-va; SHERSTNEVA, N.V., tekhn. red.

[Structural members made of aluminum alloys] Konstruktsii is aliuminevykh splavov; sostoianie i perspektivy razvitiia. Moskva, Gos. izd-vo lit-ry po stroit., arkhit. i stroit. materialam, 1961. 68 p. (MIRA 14:9)
(Aluminum, Structural)

APPROVED FOR RELEASE: 09/17/2001 CIA-RDP86-00513R000722130002-4"

"APPROVED FOR RELEASE: 09/17/2001 CIA-RDP86-00513R000722130002-4

KHOKHARIN, A.Kh.

Designing welded construction of elements made of heart-treated aluminum alloys. Prom. stroi. 39 no. 1:32-36 '61. (MIRA 14:1)
(Aluminum alloys—Welding)

APPROVED FOR RELEASE: 09/17/2001 CIA-RDP86-00513R000722130002-4"

"APPROVED FOR RELEASE: 09/17/2001 CIA-RDP86-00513R000722130002-4

KHOKHARIN, A.Kh., kand.tekhn.nauk

Use of aluminum alloys in designing electric power transmission lines. Elek.sta. 32 no.6:65-68 Je '61. (MIRA 14:8)
(Electric power distribution) (Aluminum, Structural)

APPROVED FOR RELEASE: 09/17/2001 CIA-RDP86-00513R000722130002-4"

"APPROVED FOR RELEASE: 09/17/2001 CIA-RDP86-00513R000722130002-4

KHOKHARIN, A.Kh., kand.tekhn.nauk

Lateral effect of bridge cranes on the frame of an industrial building. Prom. stroi. 39 no.9:55-59 '61. (MIRA 14:10)
(Cranes, derricks, etc.)

APPROVED FOR RELEASE: 09/17/2001 CIA-RDP86-00513R000722130002-4"

"APPROVED FOR RELEASE: 09/17/2001 CIA-RDP86-00513R000722130002-4

KHOKHARIN, A.Kh., kand.tekhn.nauk

Tightly sealing bolt connections for metal structures. Elek. sta. 33 no.4:44-48 Ap '62. (MIRA 15:7)
(Bolts and nuts)

APPROVED FOR RELEASE: 09/17/2001 CIA-RDP86-00513R000722130002-4"

"APPROVED FOR RELEASE: 09/17/2001 CIA-RDP86-00513R000722130002-4

43293

S/135/62/000/012/003/015
A006/A101

1 2300 2408

AUTHORS: Shneyderov, R. G., Rubanovich, L. L., Engineers, Khokharin, A. Kh., Candidate of Technical Sciences

TITLE: On the strength of welded assemblies in aluminum-alloy building structures

PERIODICAL: Svarochnoye proizvodstvo, no. 12, 1962, 9 - 11

TEXT: Tensile tests with static load were performed on welded assemblies of the lattice structure of a tower-crane arm. These parts were made of thermally non-hardenable aluminum-magnesium alloy AMr6 (AMg6) (σ_B 32 kg/mm^2, σ_T = 16 kg/mm^2 and δ = 15%), and of thermally hardenable alloy AB (AV) having in quenched and artificially aged state (AVT1) σ = 32 kg/mm^2, σ_T = 21 kg/mm^2 and δ = 7%. Main attention was paid to tests with overlap-welds in flat, tubular, and angular bearing rods, joined to shaped sections by flange, or flange and front seams. Moreover, the shearing strength of flange joints was tested. The assemblies were made of 6 - 8 mm thick sheets, 48 x 38, 50 x 42 mm diameter tubes and corner sections 45 x 45 x 4 and 56 x 56 x 5 x 4 mm. They were joined

Card 1/3

APPROVED FOR RELEASE: 09/17/2001 CIA-RDP86-00513R000722130002-4

"APPROVED FOR RELEASE: 09/17/2001 CIA-RDP86-00513R000722130002-4

that the welding speed is also an index of the strength of press-formed parts made of cold-hardened, thermally non-hardenable, alloy AMg6. There are 3 figures and 2 tables.

ASSOCIATIONS: Promstal'konstruktsiya (Shneyderov and Rubanovich), TsNIISK (Khokharin)

APPROVED FOR RELEASE: 09/17/2001 CIA-RDP86-00513R000722130002-4"

"APPROVED FOR RELEASE: 09/17/2001 CIA-RDP86-00513R000722130002-4

RUBANOVICH, L.L., inzh.; KHOKHARIN, A.Kh., kand.tekhn.nauk; SHNEYDEROV, R.G., inzh.

Strength of welded joints in elements made of the AMg6 aluminum alloy. Prom. stroi. 40 no.7:50-56 '62. (MIRA 15:7)
(Aluminum alloys—Welding)

APPROVED FOR RELEASE: 09/17/2001 CIA-RDP86-00513R000722130002-4"

"APPROVED FOR RELEASE: 09/17/2001 CIA-RDP86-00513R000722130002-4

SAYKO, A.V., inzh.; KHOKHARIN, A.Kh., kand.tekhn.nauk

System for limiting wind stresses in the towers of electric power transmission lines. Elek. sta. 33 no.5:67-69 My '62. (MIRA 15:7)

(Electric lines—Overhead)
(Electric lines--Poles and towers)

APPROVED FOR RELEASE: 09/17/2001 CIA-RDP86-00513R000722130002-4"

"APPROVED FOR RELEASE: 09/17/2001 CIA-RDP86-00513R000722130002-4

SHNEYDEROV, R.G., inzh.; RUBANOVICH, L.L., inzh.; KHOKHARIN, A.Kh., kand. tekhn.nauk

Strength of welded assemblies of construction elements in aluminum alloys. Svar. proizv. no.12:9-11 D '62. (MIRA 15:12)

1. Proyektnaya kontora Glavstal'konstruktsii Ministerstva stroitel'stva predpriyatiy metallurgicheskoy i khimicheskoy promyshlennosti SSSR (for Shneyderov, Rubanovich).
2. TSentral'nyy nauchno-issledovatel'skiy institut stroitel'nykh konstruktsiy Akademii stroitel'stva i arkhitektury SSSR (for Khokharin).
(Aluminum, Structural—Welding)

APPROVED FOR RELEASE: 09/17/2001 CIA-RDP86-00513R000722130002-4"

"APPROVED FOR RELEASE: 09/17/2001 CIA-RDP86-00513R000722130002-4

KLINGERT, Nikolay Vasil'yevich; KHOKHARIN, Anatoliy Kharitonovich; KHAZANOVA, A.Z., inzh., retsenzent

[Steel pipelines and equalizing reservoirs of hydroelectric power stations] Stal'nye truboprovody i uravnitel'nye rezervuary gidroelektricheskikh stantsii. Moskva, Energiia, 1965. 207 p. (MIRA 18:3)

1. Leningradskaya proyektno-konstruktorskaya kontora "Gidrostal'proyekt"

APPROVED FOR RELEASE: 09/17/2001 CIA-RDP86-00513R000722130002-4"

"APPROVED FOR RELEASE: 09/17/2001 CIA-RDP86-00513R000722130002-4

APPROVED FOR RELEASE: 09/17/2001 CIA-RDP86-00513R000722130002-4"

"APPROVED FOR RELEASE: 09/17/2001 CIA-RDP86-00513R000722130002-4

KHOKHEL', A., inzhener

Inserts for reinforced concrete beams. Stroi.mat., izdel. i konstr. 1 no.4:35 Ap'55. (MLRA 8:10)
(Czechoslovakia--Reinforced concrete construction)

APPROVED FOR RELEASE: 09/17/2001 CIA-RDP86-00513R000722130002-4"

"APPROVED FOR RELEASE: 09/17/2001 CIA-RDP86-00513R000722130002-4

KHOKHEL', A., inzhener.

Mobile lowering device in the brick factory in Gottwaldov. Stroi. mat., izdel.i konstr. 1 no.11:34 N '55. (MLRA 9:5)
(Gottwaldov, Czechoslovakia--Brickmaking machinery)

APPROVED FOR RELEASE: 09/17/2001 CIA-RDP86-00513R000722130002-4"

"APPROVED FOR RELEASE: 09/17/2001 CIA-RDP86-00513R000722130002-4

KHOKHEL', A., inzhener.

Agglomerate method of obtaining "keramzit". Stroi.mat.izdel.i konst. 1 no.12:4-6 D '55. (MIRA 9:7)
(Clay) (Cement)

APPROVED FOR RELEASE: 09/17/2001 CIA-RDP86-00513R000722130002-4"

"APPROVED FOR RELEASE: 09/17/2001 CIA-RDP86-00513R000722130002-4

KHOKHEL', A.N., inzhener

Manufacture of reinforced concrete elements at the Velke Livare (Czhechoslovakia) plant. Bet.i zhel.-bet. no.5:190-191 Ag '55. (MLRA 8:9)

(Velke Livare, Chechoslovakia--Reinforced concrete)

APPROVED FOR RELEASE: 09/17/2001 CIA-RDP86-00513R000722130002-4"

"APPROVED FOR RELEASE: 09/17/2001 CIA-RDP86-00513R000722130002-4

KHOKHEL', Aleksandr Nikolayevich; KORSAK, Yu.Ye., veduschiy redaktor; GOLOVCHENKO, G.I., tekhnicheskiy redaktor

[Production of building ceramics in Czechoslovakia; work practices of Czechoslovak plants for building ceramics] Proizvodstvo stroitel'noi keramiki v Chekhoslovatskoi Respublike; iz opyta raboty chekhoslovatskikh zavodov stroitel'noi keramiki. Kiev, Gos. izd-vo tekhn. lit-ry USSR, 1956. 93 p. (MIRA 10:1)

(Czechoslovakia--Ceramic industries)

APPROVED FOR RELEASE: 09/17/2001 CIA-RDP86-00513R000722130002-4"

"APPROVED FOR RELEASE: 09/17/2001 CIA-RDP86-00513R000722130002-4

KHOKHEL', A. N., Cand Tech Sci -- (diss) "Study of the Technological Factors of the Agglomeration of ~~Kaolins~~ clays for the Purpose of Obtaining Artificial Porous Substitutes." Kiev, 1957. 26 pp (Min of Higher Education Ukr SSR, Kiev Engineering-Construction Inst), 100 copies (KL, 51-57, 93)

APPROVED FOR RELEASE: 09/17/2001 CIA-RDP86-00513R000722130002-4"

"APPROVED FOR RELEASE: 09/17/2001 CIA-RDP86-00513R000722130002-4

AUTHOR: Khokhel', A. N. SOV/72-58-8-10/17

TITLE: The Influence of the Conditions of Heat Exchange on the Swelling of Clays(Vliyaniye usloviy teploobmena na vspuchivaniye glin)

PERIODICAL: Steklo i keramika, 1958, Nr 8, pp. 31 - 32 (USSR)

ABSTRACT: The chemical composition of the clays investigated is mentioned in table 1, their physical and chemical properties in table 2. The author produced sample spheroids of a diameter of 10 mm of paste, as well as of clay charges used for agglomeration burning. The charges consisted of 74% of clay, of 6% of anthracite, and of 20% of waste products of earlier agglomerations. The character of the agglomeration process as well as of the finished body of the clays of all deposits may be seen in table 3. It was not possible to establish such a burning regime in the electric furnace where the viscosity of the melt would be sufficient to detain the gas bubbles which separate in the interior of the spheroids. In the agglomeration burning on grates the material particles are rapidly heated to high melting temperatures and are also rapidly removed from that zone again, so that the gas bubbles can not escape from the material and a well spongy material of a weight

Card 1/2

APPROVED FOR RELEASE: 09/17/2001 CIA-RDP86-00513R000722130002-4"

"APPROVED FOR RELEASE: 09/17/2001 CIA-RDP86-00513R000722130002-4

per unit volume of 0,7 g/cm^3 is formed. The continuous line in the figure shows the area where the clays of the investigated deposits are found, and the dotted line shows that of the swelling clays according to Riley. Conclusions: 1) The more rapid the heat exchange in the paste and the cooling, the better are the conditions for the swelling of the clay. 2) The agglomeration process of burning corresponds best to these conditions. 3) Brick clays and other clay-containing raw material which hitherto have been regarded to be unsuited for the production of light porous fillers may be used for this purpose by employing the method of agglomeration burning. There are 1 figure and 3 tables.

1. Clays--Chemical properties 2. Clays--Physical properties
3. Clays--Temperature factors

APPROVED FOR RELEASE: 09/17/2001 CIA-RDP86-00513R000722130002-4"

"APPROVED FOR RELEASE: 09/17/2001 CIA-RDP86-00513R000722130002-4

KHOKHEL', Aleksandr Nikolayevich [Khokhel', O.M.]; KOMENDANT, K., red.; KOVAL'CHUK, G. [Koval'chuk, H.], tekhn.red.

[Lightweight concrete with sintered clay aggregates] Lehki betony na zapovniuvachakh z aglomerovanykh glyn. Kyiv, Derzh.vyd-vo lit-ry z budivnytstva i arkhitektury URSR, 1959. 79 p. (MIRA 14:3)

(Lightweight concrete) (Clay)

APPROVED FOR RELEASE: 09/17/2001 CIA-RDP86-00513R000722130002-4"

"APPROVED FOR RELEASE: 09/17/2001 CIA-RDP86-00513R000722130002-4

ZVORYGIN, F.V.; TOMASHOV, V.M.; KHOKHEL', O.A.

Generator of random voltages of subsonic frequencies with any distribution law and a controlled spectrum. Avtom. i prib. no.4:74-78 O-D '63. (MIRA 16:12)

1. Institut kibernetiki AN UkrSSR.

APPROVED FOR RELEASE: 09/17/2001 CIA-RDP86-00513R000722130002-4"

"APPROVED FOR RELEASE: 09/17/2001 CIA-RDP86-00513R000722130002-4

KHOKHENBERG, P.

Anisctropic superconductor with nonmagnetic impurities. Zhur. eksp. i teor. fiz. 45 no.4:1208-1217 O '63. (MIRA 16:11)

1. Institut fizicheskikh problem AN SSSR.

APPROVED FOR RELEASE: 09/17/2001 CIA-RDP86-00513R000722130002-4"

"APPROVED FOR RELEASE: 09/17/2001 CIA-RDP86-00513R000722130002-4

KHOKHIN, V., inshener.

Books about new mining techniques. Reviewed by V. Khorin. Mast. ugl. 5 no.5:31 My '56. (MLRA 9:8)
(Bibliography--Coal mining machinery)

APPROVED FOR RELEASE: 09/17/2001 CIA-RDP86-00513R000722130002-4"

"APPROVED FOR RELEASE: 09/17/2001 CIA-RDP86-00513R000722130002-4

ACC NR: AP6025679 SOURCE CODE: UR/0413/66/000/013/0146/0146

INVENTORS: Petrov, Yu. M.; Goguyev, S. V.; Naumov, N. F.; Khokhin, V. I.; Sherr, A. S.

ORG: none

TITLE: A pneumatic relay. Class 62, No. 183605

SOURCE: Izobreteniya, promyshlennyye obraztsy, tovarnyye znaki, no. 13, 1966, 146

TOPIC TAGS: pneumatic device, pneumatic control, valve

ABSTRACT: This Author Certificate presents a pneumatic relay for switching in the duct and the ejector. The casing of the relay contains inlet and outlet pipes and valves (see Fig. 1). To reduce the hydraulic resistance and to improve the productivity, the valves are elastic and have the form of petal-like sectors mounted on saddles fixed in the casing.

Card 1/2 UDC: 629.13.01/06 614.894

APPROVED FOR RELEASE: 09/17/2001 CIA-RDP86-00513R000722130002-4"

"APPROVED FOR RELEASE: 09/17/2001 CIA-RDP86-00513R000722130002-4

ACC NR: AP6025679

Fig. 1. 1 - valve; 2 - saddle

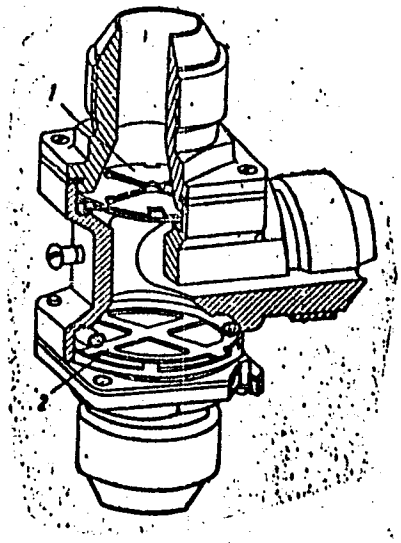

Orig. art. has: 1 figure.

SUB CODE: 13/ SUBM DATE: 18Jun65

Card 2/2

APPROVED FOR RELEASE: 09/17/2001 CIA-RDP86-00513R000722130002-4"

"APPROVED FOR RELEASE: 09/17/2001 CIA-RDP86-00513R000722130002-4

KHOKHINA, N. M.

RABOCHIY, L.G., kandidat tekhnicheskikh nauk; KOBYLYAKOV, L.M., redaktor; KHOKHINA, N.M., redaktor; SOKOLOVA, N.N., tekhnicheskiy redaktor.

[Repair of automobile and tractor electrical equipment] Remont avtotraktornogo elektro-oborudovaniia. Izd.2-e perer. i dop. Moskva, Gos.izd-vo selkhoz.lit-ry, 1955. 349 p. (MLRA 8:10)
(Tractors--Electric equipment) (Automobiles--Electric equipment)

APPROVED FOR RELEASE: 09/17/2001 CIA-RDP86-00513R000722130002-4"

"APPROVED FOR RELEASE: 09/17/2001 CIA-RDP86-00513R000722130002-4

KHOKHITKIN, I.I.

BRIL', M.T.; KHOKHITKIN, I.I.

Methods of pyrogenous syphilis therapy. Vest. vener. no.3:28-31 May-June 1951. (CLML 20:11)

1. Of the Skin-Venereological Clinic (Director--Prof. M.T.Bril'), Tomsk Medical Institute imeni V.M. Molotov.

APPROVED FOR RELEASE: 09/17/2001 CIA-RDP86-00513R000722130002-4"

"APPROVED FOR RELEASE: 09/17/2001 CIA-RDP86-00513R000722130002-4

KASATKIN, N.I.;MIRZORANTS, N.S.;KHOKHITVA, A.P.

Orientation conditioned reflexes in infants during their first year of life. Zh. vysshei nerv. deiat. 3 no.2:192-202 Mar-Apr 1953. (CLML 24:4)

1. Laboratory of Higher Nervous Activity of the Child, Institute of Pediatrics of the Academy of Medical Sciences USSR.

APPROVED FOR RELEASE: 09/17/2001 CIA-RDP86-00513R000722130002-4"

"APPROVED FOR RELEASE: 09/17/2001 CIA-RDP86-00513R000722130002-4

KHOKHLACHEV,

"The Picture of the Blood in Experimental Foot- and-Mouth Disease". Prakt. veterin. i konevodstvo, 1931, No 4. (Bibliography for Article Foot and Mouth Disease by A. L. Skomorokhov, State Publishing House for Agrucultural Literature, Moscow/Leningrad, 1947.

SO: U-1625, 11 January 1952

APPROVED FOR RELEASE: 09/17/2001 CIA-RDP86-00513R000722130002-4"

"APPROVED FOR RELEASE: 09/17/2001 CIA-RDP86-00513R000722130002-4

KHOKHLACHEV, [redacted]

"Dispensary system as a method of prophylaxis of internal noncontagious diseases of horses."

SO: Vet. 25 (10) 1948, p. 29

APPROVED FOR RELEASE: 09/17/2001 CIA-RDP86-00513R000722130002-4"

"APPROVED FOR RELEASE: 09/17/2001 CIA-RDP86-00513R000722130002-4

KHOKHLACHEV, A.

~~KOHOKHLACHEV, A.~~

"Spartakiada" got started. Za. rul. 18 no. 12:13 D '60. (MIRA 14:1)

1. Zamestitel' nachal'nika shtaba Vsesoyuznoy spartakiady po tekhnicheskim vidam sporta.
(Motorcycle racing) (Automobile racing)

APPROVED FOR RELEASE: 09/17/2001 CIA-RDP86-00513R000722130002-4"

"APPROVED FOR RELEASE: 09/17/2001 CIA-RDP86-00513R000722130002-4

KHOKHLACHEV, A.

Technical groups and courses in the primary organization. Voen. znam. 39 no.3:17-18 Mr '63. (MIRA 16:7)
(Military education)

APPROVED FOR RELEASE: 09/17/2001 CIA-RDP86-00513R000722130002-4"

"APPROVED FOR RELEASE: 09/17/2001 CIA-RDP86-00513R000722130002-4

STEKOLNIKOV, V. V.; KHOKHLACHEV, A. A.

"High-pressure reactor vessels."

report submitted for 3rd Intl Conf, Peaceful Uses of Atomic Energy, Geneva, 31 Aug-9 Sep 64.

APPROVED FOR RELEASE: 09/17/2001 CIA-RDP86-00513R000722130002-4"

"APPROVED FOR RELEASE: 09/17/2001 CIA-RDP86-00513R000722130002-4

VOROB'YEV; SOKOLOV, I. N.; KHOKHLACHEV, A. A.; GRITSKOV, V. N.

"Experimental pressure vessel type reactor for studying problems of boiling and vapour superheating."

report submitted for 3rd Intl Conf, Peaceful Uses of Atomic Energy, Geneva, 31 Aug-9 Sep 64.

APPROVED FOR RELEASE: 09/17/2001 CIA-RDP86-00513R000722130002-4"

"APPROVED FOR RELEASE: 09/17/2001 CIA-RDP86-00513R000722130002-4

6c

L 23074-65 EWT(m)/EPF(c)/EPF(n)-2/EPR Pr-4/Ps-4/Pu-4

ACCESSION NR: AP5001264 S/0089/64/017/006/0427/0439

AUTHOR: Kramerov, A. Ya.; Markov, Yu. V.; Skvortsov, S. A.; Denisov, V. P.; Kulikov, Ye. V.; Sorokin, Yu. P.; Stekol'nikov, V. V.; Khokhlachev, A. A.; Tatarnikov, V. P.; Sidorenko, V. A.

TITLE: Some trends in the development of the second Voronezh power reactor 19

SOURCE: Atomnaya energiya, v. 17, no. 6, 1964, 427-439

TOPIC TAGS: power reactor, water cooled reactor, water moderated reactor, reactor economy, second Voronezh power reactor

ABSTRACT: The paper is a summary of the SSSR #304 report at the Third International Conference on Peaceful Uses of Atomic Energy in Geneva, 1964. The first Voronezh reactor, of 210 Mw (elect.), was described earlier (S. A. Skvortsov, Transactions of the Second International Conf., 1959). This reactor is now being readied for exploitation. The second Voronezh reactor, of 365 Mw(elect.) is under construction. The water pressure will be 120 atm. Water is used as mod-

Card 1/2

APPROVED FOR RELEASE: 09/17/2001 CIA-RDP86-00513R000722130002-4"

"APPROVED FOR RELEASE: 09/17/2001 CIA-RDP86-00513R000722130002-4

L 23074-65
ACCESSION NR: AP5001264

erator and for the heat transfer. During the operation of about 2 years, fuel consumption is about 30,000 Mw-day/tons of uranium. The second reactor is a modernization of the first reactor. Details are given of the construction, and the effects of various characteristics on the exploitation cost are estimated. Orig. art. has: 7 figures

ASSOCIATION: None

SUBMITTED: 00 ENCL: 00 SUB CODE: NP

NR REF SOV: 005 OTHER: 003

Card 2/2

APPROVED FOR RELEASE: 09/17/2001 CIA-RDP86-00513R000722130002-4"

"APPROVED FOR RELEASE: 09/17/2001 CIA-RDP86-00513R000722130002-4

KHOKHLACHEV, B.

POSTOVSKIY, V., inzh.; KHOKHLACHEV, B., inzh.

Using gas under high pressure. Stroi.mat. 3 no.7:26-27 Jl '57. (MIRA 10:10)

(Cement plants) (Drying apparatus)

APPROVED FOR RELEASE: 09/17/2001 CIA-RDP86-00513R000722130002-4"

"APPROVED FOR RELEASE: 09/17/2001 CIA-RDP86-00513R000722130002-4

KHOKHLACHEV, F.N.; GRECHANYY, I.V.

[Don valley flood lands; practice of vegetable growers] V donskom zaimishche; opyt ovoshchevodov. Rostov-na-Donu, Rostovskoe obl. kn-vo, 1951. 68 p. (MLRA 9:11)
(Rostov Province--Vegetable gardening)

APPROVED FOR RELEASE: 09/17/2001 CIA-RDP86-00513R000722130002-4"

"APPROVED FOR RELEASE: 09/17/2001 CIA-RDP86-00513R000722130002-4

KOVAL'CHUK, Viktor Semenovich; KHOKHLACHEV, G.N., red.

[Marine radiotelephonic communication and apparatus] Morskaia radiotelefonnaia sviaz' i apparatura. Moskva, Transport, 1965. 137 p. (MIRA 18:9)

APPROVED FOR RELEASE: 09/17/2001 CIA-RDP86-00513R000722130002-4"

"APPROVED FOR RELEASE: 09/17/2001 CIA-RDP86-00513R000722130002-4

DOLMATOV, Boris Pavlovich; KHOKHLACHEV, G.N., red.

[Comparative evaluation of tables and aids used in nautical astronomy] Sravnitel'naia otsenka tablits i posobii morekhodnoi astronomii. Moskva, Transport, 138 p. (MIRA 18:12)

APPROVED FOR RELEASE: 09/17/2001 CIA-RDP86-00513R000722130002-4"

"APPROVED FOR RELEASE: 09/17/2001 CIA-RDP86-00513R000722130002-4

KHOKHLACHEV, G. P.

Viticulture

On the Goriachevodskiy state viticulture farm. Vin. SSSR 12 No. 7 1952.

Monthly List of Russian Accessions, Library of Congress, October 1952. Unclassified.

APPROVED FOR RELEASE: 09/17/2001 CIA-RDP86-00513R000722130002-4"

"APPROVED FOR RELEASE: 09/17/2001 CIA-RDP86-00513R000722130002-4

KHOKHLACHEV, I.

Finance group of the Commission on Social Insurance. Okhr. truda i sots.strakh. 5 no.11:36-37 N '62. (MIRA 15:12)
(Insurance, Social)

APPROVED FOR RELEASE: 09/17/2001 CIA-RDP86-00513R000722130002-4"

"APPROVED FOR RELEASE: 09/17/2001 CIA-RDP86-00513R000722130002-4

KHOKHLACHEV, I.

Who needs this "commercialism"? Okhr. truda i sets. strakh. 6 no.3:26 Mr '63. (MIRA 16:4)

(FEODOSIYA--HEALTH RESORTS, WATERING PLACES, ETC.)

APPROVED FOR RELEASE: 09/17/2001 CIA-RDP86-00513R000722130002-4"

"APPROVED FOR RELEASE: 09/17/2001 CIA-RDP86-00513R000722130002-4

PAVLYUCHENKO, A.P., inzh.; KHOKHLACHEV, I.G., inzh.

Pulsation of blast furnace air preheaters. Stal' 22 no.1:13-15 Ja '62. (MIRA 14:12)

1. Yuvenergochermet.

(Air preheaters)

APPROVED FOR RELEASE: 09/17/2001 CIA-RDP86-00513R000722130002-4"

"APPROVED FOR RELEASE: 09/17/2001 CIA-RDP86-00513R000722130002-4

AUTHOR: Khokhlacheva, N. A. (Active member)

TITLE: [illegible] using galvanomagnetic [illegible]

SOURCE: Radiotekhnika, v. 19, no. 8, 1964, 70-74

TOPIC TAGS: [illegible] circuit, galvanomagnetic [illegible]

ABSTRACT: Experiments intended for developing [illegible]

APPROVED FOR RELEASE: 09/17/2001 CIA-RDP86-00513R000722130002-4"

"APPROVED FOR RELEASE: 09/17/2001 CIA-RDP86-00513R000722130002-4

SUB CODE: EC NO REF SOV: 003 OTHER: 000

APPROVED FOR RELEASE: 09/17/2001 CIA-RDP86-00513R000722130002-4"

"APPROVED FOR RELEASE: 09/17/2001 CIA-RDP86-00513R000722130002-4

L 42034-65 EWT(1)/EWA(h) Peb 00

UR/0286/65/000/00[illegible]

AUTHOR: [illegible]

[illegible] circuit

output electrodes are arranged [illegible] process takes place by creating a transverse electric field changing the [illegible]

SUBMITTED: 23Nov61 ENCL: 00 SUB CODE: EC, MF

NO REF SOV: 000 OTHER: 000

Card [illegible]

APPROVED FOR RELEASE: 09/17/2001 CIA-RDP86-00513R000722130002-4"

"APPROVED FOR RELEASE: 09/17/2001 CIA-RDP86-00513R000722130002-4

KHOKHLACHEV, P.V.; MAKAROV, N.F.; LISOVICH, G.M.; TERESHCHENKO, N.I., red.

[The journal-voucher accounting system on collective farms] Zhurnal'no-ordernaia forma ucheta v kolkhozakh. Moskva, Kolos, 1964. 142 p. (MIRA 17:12)

APPROVED FOR RELEASE: 09/17/2001 CIA-RDP86-00513R000722130002-4"

"APPROVED FOR RELEASE: 09/17/2001 CIA-RDP86-00513R000722130002-4

USSR/Diseases of Farm Animals. Diseases Caused by Bacteria and Fungi. R-1

Abs Jour : Ref Zhur-Biol., No 18, 1958, 83547

Author : Gromov, V. P.; Khokhlachev, V. K.
Institute : Sverdlovsk ~~Institute of Agriculture~~
Title : Vaccine Therapy in Brucellosis of Swine

Orig Pub : Tr. Sverdl. s.-kh. in-ta, 1957, 1, 317-320

Abstract : Semiliquid formolvaccine was used for treating brucellosis. On the first day of treatment of this vaccine was injected in a 1 ml dose, on the 3rd day in a 3 ml dose, and on the 6th day in a 5 ml dose. After 70 days the treatment was repeated. The vaccinations resulted in body temperature increases in the sick animals, and they also caused loss of appetite and depression. Vaccine therapy affected the treated animals favorably. Bacteriological, serological, and biological findings were negative.

Card 1/1

APPROVED FOR RELEASE: 09/17/2001 CIA-RDP86-00513R000722130002-4"

KHOKHLACHEV, Ye.A.

Memorization of words of a foreign language in relation to methods of explaining their meaning and to memorization time. Vop. psikhol. 6 no. 6:65-74 N-D '60. (MIRA 13:12)

1. Pedagogicheskiy institut i Institut usovershenstvovaniya uchiteley, Rostov-na-Donu.
(Language and languages--Study and teaching)

"APPROVED FOR RELEASE: 09/17/2001 CIA-RDP86-00513R000722130002-4

KHOKHLACHEVA, N.A.

New galvanomagnetic switching devices. Radiotekhnika 18 no.11: 71-77 N '63. (MIRA 16:12)

1. Deystvitel'nyy chlen Nauchno-tekhnicheskogo obshchestva radiotekhniki i elektrosvyazi imeni Popova.

APPROVED FOR RELEASE: 09/17/2001 CIA-RDP86-00513R000722130002-4"

"APPROVED FOR RELEASE: 09/17/2001 CIA-RDP86-00513R000722130002-4

KHOKHLACHEVA, N.A.

Features of using galvanomagnetic switches in logic circuits. Radiotekhnika 19 no.8:70-74 Ag '64. (MIRA 17:9)

1. Deystvitel'nyy chlen Nauchno-tekhnicheskogo obshchestva radiotekhniki i elektrosvyazi imeni A.S. Popova.

APPROVED FOR RELEASE: 09/17/2001 CIA-RDP86-00513R000722130002-4"

"APPROVED FOR RELEASE: 09/17/2001 CIA-RDP86-00513R000722130002-4

KHOKHLACHEVA, N.M.

Privlam

APPROVED FOR RELEASE: 09/17/2001 CIA-RDP86-00513R000722130002-4"

"APPROVED FOR RELEASE: 09/17/2001 CIA-RDP86-00513R000722130002-4

KHOKHLENKO, A.F.

Quantitative determination of amino acids in the proteins of sunflower seed by paper chromatography. Izv. vys. ucheb. zav.; pishch. tekh. no. 2:156-160 '58. (MIRA 11:10)

1. Krasnodarskiy institut pishchevoy promyshlennosti, Kafedra fizicheskoy i kolloidnoy khimii.
(Sunflower seed--Analysis)
(Amino acids)
(Paper chromatography)

APPROVED FOR RELEASE: 09/17/2001 CIA-RDP86-00513R000722130002-4"

"APPROVED FOR RELEASE: 09/17/2001 CIA-RDP86-00513R000722130002-4

KHOKHLENKO A. F.

KHKHLENKO, A.F.

Nitrogen substances in sunflower seeds. Izv.vys.ucheb.zav.; pishch.tekh. no.2:151-154 '59. (MIRA 12:8)

1. Krasnodarskiy institut pishchevoy promyshlennosti.
(Sunflower seed) (Nitrogen compounds)

APPROVED FOR RELEASE: 09/17/2001 CIA-RDP86-00513R000722130002-4"

"APPROVED FOR RELEASE: 09/17/2001 CIA-RDP86-00513R000722130002-4

KHOKHLENKO, A.F.

Amino acids of protein fractions recovered from the kernels of sunflower seeds. Izv. vys. ucheb. zav.;pishch. tekh. no.3: 31-36 '60. (MIRA 14:8)

1. Krasnodarskiy institut pishchevoy promyshlennosti, Kafedra konservirovaniya.
(Amino acids) (Proteins) (Sunflower seed)

APPROVED FOR RELEASE: 09/17/2001 CIA-RDP86-00513R000722130002-4"

"APPROVED FOR RELEASE: 09/17/2001 CIA-RDP86-00513R000722130002-4

KHOKHLENKO, A.F.

Biochemical characteristics of oil-rich sunflowers. Izv.vys. ucheb.zav.; pishch.tekh. no.1:23-25 '64. (MIRA 17:4)

1. Krasnodarskiy politekhnicheskiy institut, kafedra organicheskoy khimii.

APPROVED FOR RELEASE: 09/17/2001 CIA-RDP86-00513R000722130002-4"

"APPROVED FOR RELEASE: 09/17/2001 CIA-RDP86-00513R000722130002-4

AUTHOR: Khokhlev, V.M. SOV/149-58-4-19/26

TITLE: Physico-Chemical Investigation of Simultaneous Solid Solubility of Copper and Chromium in Aluminium (Fiziko-khimicheskoye issledovaniye sovmestnoy rastvorimosti medi i khroma v alyuminii)

PERIODICAL: Izvestiya Vysshikh Uchebnykh Zavedeniy, Tsvetnaya Metallurgiya, 1958, Nr 4, pp 136-141 (USSR)

ABSTRACT: The experimental Al-Cu-Cr alloys were melted in an electric furnace, in alumina crucibles, under cover of a protective flux consisting of 45% NaCl and 55% KCl. The alloying elements were added in the form of 5% Cu-Al and 3% Cr-Al master alloys. To ensure complete alloying the melts were held at 850-900°C for 1-2 hrs before casting. Only the Al-rich corner of the Al-Cu-Cr system was investigated, the Cu and Cr content of the studied alloys not exceeding 4.5 and 0.3% respectively. Simultaneous solid solubility of Cu and Cr in aluminium at 500, 400, 300 and 200°C was determined by metallographic examination of 8 series of alloys lying along tie lines intersecting at the Al corner of the

Card 1/5

APPROVED FOR RELEASE: 09/17/2001 CIA-RDP86-00513R000722130002-4"

"APPROVED FOR RELEASE: 09/17/2001 CIA-RDP86-00513R000722130002-4

SOV/149-58-4-19/26

Physico-Chemical Investigation of Simultaneous Solid Solubility of Copper and Chromium in Aluminium

equilibrium diagram of the Al-Cu-Cr system with the following Cu to Cr ratios, 30 to 1, 20 to 1, 12 to 1, 6 to 1, 4 to 1, 2 to 1, 1 to 1, and 1 to 2. All the experimental specimens (15 mm long, 10 mm diameter) sealed in evacuated glass ampoules were heated to 500°C and after 7 days at this temperature a batch of specimens were quenched in ice-cold water. The remainder was cooled to 400°C in 8 hrs and after 2 days at the temperature the second batch of specimens were quenched. The third and fourth batches were quenched from 300 and 200°C after similar cooling cycles, while the last batch consisted of specimens that had been furnace-cooled from 200°C to room temperature. The results of the microscopic examination of the electrolytically polished and etched alloys are given in Table 1, where the one and two-phase alloys are denoted by (+) and (-) respectively. From these data isotherms of simultaneous solubility of Cu and Cr in Al

Card 2/5

APPROVED FOR RELEASE: 09/17/2001 CIA-RDP86-00513R000722130002-4"

SOV/149-58-4-19/26

Physico-Chemical Investigation of Simultaneous Solid Solubility of Copper and Chromium in Aluminium

were constructed (Fig.1) showing that (a) the combined solid solubility increases with rising temperature and (b) addition of Cr results in decreased solid solubility of Cu in Al. In the next stage of the investigation the age-hardening characteristics of the Al-Cu-Cr alloys were studied by means of (Brinell) hardness measurements taken first on specimens quenched from 500°C and then after 18 hrs at 175°C. The only alloys found to be of practical interest were those belonging to series 1 (Cu to Cr = 30 to 1) and 11 (Cu to Cr = 20 to 1). The relative increase of hardness, $\Delta H/H$, of these alloys after ageing is shown on Fig.2. Alloys of sections 111-V age-hardened to a very small degree, those of sections V1-V111 practically not at all. All the $\Delta H/H$-versus-composition graphs were characterised by a maximum, the position of which was shifted towards the lower (Cu+Cr) content as the combined (Cu+Cr) content decreased. Thus in alloys of section 1, the maximum $\Delta H/H$ = 63.3% was situated

Card 3/5

"APPROVED FOR RELEASE: 09/17/2001 CIA-RDP86-00513R000722130002-4

SOV/149-58-4-19/26

Physico-Chemical Investigation of Simultaneous Solid Solubility of Copper and Chromium in Aluminium

at 4.03% (Cu+Cr), while in section VIII the maximum $\Delta H/H$ = 1.2% was at 0.45% (Cu+Cr). The ultimate tensile strength, σ_B, and elongation, δ, of alloys of section 1, both in the solution-treated and age-hardened (18 hrs at 175°C) condition are given in Table 2. The effect of Cr addition on the corrosion resistance of the Al-Cu alloys was also determined by measuring the quantity of hydrogen evolved at the surface of specimens placed in a 3% NaCl + 1% HCl solution. Fig.3 shows that the corrosion resistance of age-hardened ternary alloys of section 1 is considerably higher than that of the corresponding binary, Cr-free alloys. The alloy which combined optimum mechanical properties (σ_B=35.3 kg/mm^2, δ = 8.1%) with good corrosion resistance was one

Card 4/5

APPROVED FOR RELEASE: 09/17/2001 CIA-RDP86-00513R000722130002-4"

SOV/149-58-4-19/26

Physico-Chemical Investigation of Simultaneous Solid Solubility of Copper and Chromium in Aluminium

containing 3.9% Cu and 0.13% Cr. There are 3 figures, 2 tables and 7 references of which 3 are Soviet and 4 German.

ASSOCIATION: Leningradskiy Gornyy Institut. Kafedra Analiticheskoy Khimii (Leningrad Mining Institute, Chair for Analytical Chemistry)

SUBMITTED: 13th May 1958.

Card 5/5

"APPROVED FOR RELEASE: 09/17/2001 CIA-RDP86-00513R000722130002-4

KHOKHLEV, V. M.: Master Chem Sci (diss) -- "Physicochemical investigation of the simultaneous solubility of copper and chromium in aluminum in the solid state as a function of temperature". Leningrad, 1959. 19 pp (Min Higher Educ USSR, Leningrad Order of Lenin and Order of Labor Red Banner Mining Inst im V. G. Plekhanov), 120 copies (KL, No 15, 1959, 114)

APPROVED FOR RELEASE: 09/17/2001 CIA-RDP86-00513R000722130002-4"

"APPROVED FOR RELEASE: 09/17/2001 CIA-RDP86-00513R000722130002-4

KHOKHLINA, E.A.

"The Tissue Affinity" (p.115) by E.A. Khokhlina

SO: Advances In Modern Biology (Uspekhi Sovremennoi Biologii) Vol. XV, 1942, No. 1

APPROVED FOR RELEASE: 09/17/2001 CIA-RDP86-00513R000722130002-4"

"APPROVED FOR RELEASE: 09/17/2001 CIA-RDP86-00513R000722130002-4

KHOKHLINA, N.S.

BARANENKOVA, A.S.; KHOKHLINA, N.S.; YUDANOV, I.G.

Distribution of larvae of the sea-perch of the genus Sebastes in the Norwegian Sea. Dokl. AN SSSR 111 no.2:489-490 N '56. (MIRA 10:1)

1. Polyarnyy nauchno-issledovatel'skiy institut morskogo rybnogo khozyaystva i okeanografii. Predstavleno akademikom Ye.N. Pavlovskim.
(Norwegian Sea--Perch)

APPROVED FOR RELEASE: 09/17/2001 CIA-RDP86-00513R000722130002-4"