"APPROVED FOR RELEASE: 09/17/2001 CIA-RDP86-00513R000722820004-6

KISELINCHEV, Asen, akad. (Sofiia) (1905 - 1960)

Development and achievements of Marxist philosophy in the People's Republic of Bulgaria. Spisanie BAN 5 no.2:60-67 '60. (EEAI 9:11)
(Bulgaria--Communism)

(ASEN KHRISTOV)

APPROVED FOR RELEASE: 09/17/2001 CIA-RDP86-00513R000722820004-6"

"APPROVED FOR RELEASE: 09/17/2001 CIA-RDP86-00513R000722820004-6

BULGARIA

ZAIMOV, K., Department of Psychiatry at the Higher Medical Institute in Sofia (Department head: Academician G. UZUNOV); and KISELINCHEVA, V., Department of Psychology at the Faculty of Philosophy and History, Sofia University (Department head: Prof G. PIR'OV)

"Observations on the Memory State of Students During Examinations."

Sofia, Nevrologiya, Psikhiatriya i Nevrokhirurgiya, Vol 5, No 2, 1966, pp 135-138

Abstract [authors' Russian and English summaries, modified]: Observations are reported on 623 medical, education and philosophy students, 133 of them (21.35 percent) having displayed faulty memory. The authors distinguish quantitative and qualitative memory errors and give detailed classification and percentages for the various cases observed. One Western and ten Soviet-bloc references. Manuscript received in May 65.

1/1

ZIATAREV, R.; KISELINOVA

APPROVED ~~FOR RELEASE~~: 09/17/2001 CIA-RDP86-00513R000722820004-

Use of gramicidin in certain otorhinolaryngological diseases.
Khirurgiia, Sofia 12 no.2:163-165 1959.
(OTORHINOLARYNGOLOGICAL DISEASES, ther.
gramicidin (Bul))

"APPROVED FOR RELEASE: 09/17/2001 CIA-RDP86-00513R000722820004-6

KISELITE, T., Cand Bio Sci--(diss) "Zooplankton of the Kurshyu Mares Bay." Vil'nyus, 1958. 23 pp (Min of Higher Education USSR. Vil'nyus State U im V. Kapsukas), (KL,22-58,106)

-58-

APPROVED FOR RELEASE: 09/17/2001 CIA-RDP86-00513R000722820004-6"

"APPROVED FOR RELEASE: 09/17/2001 CIA-RDP86-00513R000722820004-6

1. KISEL'KOV, S.I.

2. USSR (600)

4. Agriculture

7. Big-horn cattle of the Crimea. Simferopol', Krymizdat,1952.

9. Monthly List of Russian Accession,Library of Congress, March,1953.Unclassified.

APPROVED FOR RELEASE: 09/17/2001 CIA-RDP86-00513R000722820004-6"

"APPROVED FOR RELEASE: 09/17/2001 CIA-RDP86-00513R000722820004-6

Country : USSR
CATEGORY : Farm Animals. Cattle

Q

ABS. JOUR. : RZBiol., No. 13, 1958, No. 59501

AUTHOR : Kisel'kov, S. I.
INST. : Crimean Agricultural Institute
TITLE : Breed Improvement of the Red Steppe Cattle (Preliminary Report)

ORIG. PUB. : Tr. Krymsk. s.-kh. in-ta, 1957, 4, 291-303

ABSTRACT : A tentative complex of measures for the directed controlled raising and breed improvement of high-producing cattle of the Red Steppe breed in Krymskaya Oblast is proposed.

CARD: 1/1

APPROVED FOR RELEASE: 09/17/2001 CIA-RDP86-00513R000722820004-6

USSR/Human and Animal Physiology (Normal and Pathological). T-3
Blood. Formed Elements.

Abs Jour : Ref Zhur - Biol., No 16, 1958, 74627

Author : Kisel'kov, S.I., Lobanova, O.I.

Inst : Crimea Agricultural Institute.

Title : On the Study of Clinical and Hematological Indicators of the Red Steppe Cattle of Crimean Oblast' (Preliminary Report).

Orig Pub : Tr. Krymsk. s.-kh. in-ta, 1957, 4, 305-315

Abstract : In 102 adult cows (C) and 52 calves of the Red Steppe breed, the content of erythrocytes (E), Hb and leukocytes in the blood were investigated. The blood was taken in 4-6 and 14-16 hours. The quantity of E in C in the summer equaled 4.5-5.9 million per 1 mm^3, in winter - 4.9-6.8 and in the spring - 5.2-5.7; in C with the highest yield per milking

Card 1/3

"APPROVED FOR RELEASE: 09/17/2001 CIA-RDP86-00513R000722820004-6

USSR/Human and Animal Physiology (Normal and Pathological). T-3
Blood. Formed Elements.

Abs Jour : Ref Zhur - Biol., No 16, 1958, 74627

it was higher. In calves it contained 5.6-5.9 million E per 1 mm3, in older ones 5.2-5.7. In summer the number of E increased in the second half of the day. The diameter of E in the summer and spring equaled 4.2-5.5 μ ; it was the least in young C and increased in the old. The quantity of Hb in the summer equaled 59.1-64.3%, in winter - 54.4-57.4, in the spring - 55.8-60.2%. The quantity of E in the 3-5th month of lactation increased, but their saturation of Hb decreased; this is most expressed in the highly-productive C. Seemingly, in the period of most productivity many immature E enter in the blood which have a lower content of Hb. The quantity of leukocytes (L) was normal (5-10 thousand per 1 mm3). In the summer and spring it increased during the day from 5.5-7.8 to 6.0-8.0 thousand. In the winter the quantity of L decreased. The greatest quantity of E (up to 9.3 million) is found in

Card 2/3

APPROVED FOR RELEASE: 09/17/2001 CIA-RDP86-00513R000722820004-6"

"APPROVED FOR RELEASE: 09/17/2001 CIA-RDP86-00513R000722820004-6

KISEL'KOV, Yu., inzhener.

More attention to the mechanization of production. Leg.prom.14 no.3: 49-50 Mr '54. (MLRA 7:5)

(Clothing industry)

APPROVED FOR RELEASE: 09/17/2001 CIA-RDP86-00513R000722820004-6"

"APPROVED FOR RELEASE: 09/17/2001 CIA-RDP86-00513R000722820004-6

MATEEV, Dr.; KISELKOVA, El.

The afferent system of muscle in muscular work and muscular fatigue. Izv. inst. fiziol. (Sofiia) 6:19-33 '63.

(MUSCLES) (PHYSIOLOGY) (FATIGUE)
(EXERTION) (ELECTROENCEPHALOGRAPHY)
(BRAIN ELECTROPHYSIOLOGY)

APPROVED FOR RELEASE: 09/17/2001 CIA-RDP86-00513R000722820004-6"

"APPROVED FOR RELEASE: 09/17/2001 CIA-RDP86-00513R000722820004-6

KISELKOVA, V.;FIKOV, A.;FOFOVA, Ts.

"Tuberculosis in Infants of Our Country." p. 2,
(ZDRAVEN FRONT, No. 46, Nov. 1954, Sofiya, Bulgaria)

SO: Monthly List of East European Accessions, (EEAL), LC, Vol. 4
No. 5, May 1955, Uncl.

APPROVED FOR RELEASE: 09/17/2001 CIA-RDP86-00513R000722820004-6"

"APPROVED FOR RELEASE: 09/17/2001 CIA-RDP86-00513R000722820004-6

KISELLO, A.A.; TIKHOMIROV, P.Ye., professor, direktor.

Treatment of tuberculous-allergic keratitis by tuberculin electrophoresis. Vest. oft. 32 no.5:29-32 S-O '53. (MLRA 6:10)

1. Glaznaya klinika Leningradskogo sanitarno-gigiyenicheskogo instituta. (Tuberculin) (Cornea--Tuberculosis) (Cataphoresis)

APPROVED FOR RELEASE: 09/17/2001 CIA-RDP86-00513R000722820004-6"

"APPROVED FOR RELEASE: 09/17/2001 CIA-RDP86-00513R000722820004-6

KISEL'MAN, E.N.

New foraminiferae species from Danian sediments in the West Siberian Plain. Trudy SNIIGGIMS no.23:14-17 '62. (MIRA 16:9)
(West Siberian Plain—Foraminifera, Fossil)

APPROVED FOR RELEASE: 09/17/2001 CIA-RDP86-00513R000722820004-6"

"APPROVED FOR RELEASE: 09/17/2001 CIA-RDP86-00513R000722820004-6

BULATOVA, Z.I.; VOYTSEL', Z.A.; GORBOVETS, A.N.; IVANOVA, Ye.A.; KAZ'MINA, T.A.; KISEL'MAN, E.N.; KLIMKO, S.A.; KLIMOVA, I.G.; KOZYREVA, V.F.; KORNEVA, F.R.; KOSTITSINA, R.P.; KRUGLOVA, Z.M.; STRIZHOVA, A.I.; MARKOVA, L.G.; TARASOVA, A.S.; USHAKOVA, M.V.; FILIPPOVA, Ye.A., ved.red.; TROFIMOV, A.V., tekhn.red.

[Mesozoic and Cenozoic stratigraphy of the West Siberian Lowland] Stratigrafiia mezozoia i kainozoia Zapadno-Sibirskoi nizmennosti. Moskva, Gos.nauchno-tekhn.izd-vo neft. i gorno-toplivnoi lit-ry, 1957. 147 p. (MIRA 12:2)

1. Gosudarstvennyy soyuznyy Zapadno-Sibirskiy nefterazvedochnyy trest.

(Siberia, Western--Geology, Stratigraphic)

APPROVED FOR RELEASE: 09/17/2001 CIA-RDP86-00513R000722820004-6"

"APPROVED FOR RELEASE: 09/17/2001 CIA-RDP86-00513R000722820004-6

KISEL'MAN, E.N.

Microfaunal zones of the Gan'kino series in the West Siberian Plain. Trudy SNIGGIMS no.8:176-188 '60. (MIRA 15:9)
(West Siberian Plain--Micropaleontology)

APPROVED FOR RELEASE: 09/17/2001 CIA-RDP86-00513R000722820004-6"

"APPROVED FOR RELEASE: 09/17/2001 CIA-RDP86-00513R000722820004-6

SUBBOTINA, N.N.; ALEKSEYCHIK-MITSKEVICH, L.S.; BARANOVSKAYA, O.F.: BULATOVA, Z.I.; BULYNNIKOVA, S.P.; DUBROVSKAYA, N.F.; KISEL'MAN, E.N.; KOZLOVA, G.E.; KUZINA, V.I.; KRIVOBORSKIY, V.V.; USHAKOVA, M.V.; FREYMAN, Ye.V.

[Cretaceous and Paleogene Foraminifera in the West Siberian Plain] Foraminif[illegible] / melovykh i paleogenovykh otlozhenii Zapadno Sibirskoi nizmennosti. Leningrad, Nedra, 1964.455 p. (Leningrad. Nauchno-issledovatel'skii geologorazvedochnyi institut. Trudy, no.234). (MIRA 18:1)

1. Vsesoyuznyy neftyanoy nauchno-issledovatel'skiy geologorazvedochnyy institut, Leningrad; Sibirskiy nauchno-issledovatel'skiy institut geologii, geofiziki i mineral'nogo syr'ya; Novosibirskoye territorial'noye geologicheskoye upravleniye i Tyumenskoye territotial'noye geologicheskoye upravleniye.

APPROVED FOR RELEASE: 09/17/2001 CIA-RDP86-00513R000722820004-6"

"APPROVED FOR RELEASE: 09/17/2001 CIA-RDP86-00513R000722820004-6

KISEL'MAN, L.A., inzh.

Simplification of start circuits for d.c. motors of turbine oil pumps. and raw-coal feeders. Elek.sta. 29 no.5:86-87 (MIRA 12:3)
(Electric motors, Direct current)

APPROVED FOR RELEASE: 09/17/2001 CIA-RDP86-00513R000722820004-6"

"APPROVED FOR RELEASE: 09/17/2001 CIA-RDP86-00513R000722820004-6

LEVIN, Yevgeniy Moiseyevich; PETROV, Vladimir Vadimovich; KISEL'MAN, Mark Lazarevich; FILIPENOK, T.G., red.; KUZ'MENKOVA, N.T., tekhn.red.

[Breakdown prevention in boring operations] Preduprezhdenie avarii pri burenii. Groznyi, Checheno-Ingushskoe izd-vo, 1960. 121 p. (MIRA 13:12)

(Boring machinery)

APPROVED FOR RELEASE: 09/17/2001 CIA-RDP86-00513R000722820004-6"

"APPROVED FOR RELEASE: 09/17/2001 CIA-RDP86-00513R000722820004-6

KISEL'MAN, M.L.

Wear of casing strings. Burenie no.1:34-36 '65. (MIRA 18:5)

1. Gosudarstvennoye vsesoyuznoye ob"yedineniye Groznenskoy neftyanoy i gazovoy promyshlennosti.

APPROVED FOR RELEASE: 09/17/2001 CIA-RDP86-00513R000722820004-6"

"APPROVED FOR RELEASE: 09/17/2001 CIA-RDP86-00513R000722820004-6

KISEL'MAN, M.L.

Determining friction forces in crooked wells. Neft. khoz. 38 no.9:43-46 S '60. (MIRA 13:9)

(Friction)

APPROVED FOR RELEASE: 09/17/2001 CIA-RDP86-00513R000722820004-6"

"APPROVED FOR RELEASE: 09/17/2001 CIA-RDP86-00513R000722820004-6

KISEL'MAN, M.L.

Increase in frictional forces in motionless contact of a drilling string with the well walls. Izv. vys. uch. zav.; neft' i gaz 5 no.9:35-38 '62. (MIRA 17:5)

1. Groznenskiy neftyanoy institut.

APPROVED FOR RELEASE: 09/17/2001 CIA-RDP86-00513R000722820004-6"

"APPROVED FOR RELEASE: 09/17/2001 CIA-RDP86-00513R000722820004-6

KISEL'MAN, M.L.; ZAYTSEV, Ye.N.

Pistons of new design for drilling pumps. Mash. i neft. obor. no.9:10-11 '63. (MIRA 17:2)

1. Gosudarstvennoye vsesoyuznoye ob"yedineniye Groznenskoy neftyanoy i gazovoy promyshlennosti.

APPROVED FOR RELEASE: 09/17/2001 CIA-RDP86-00513R000722820004-6"

"APPROVED FOR RELEASE: 09/17/2001 CIA-RDP86-00513R000722820004-6

KISEL'MAN, M.L.

Wear of drill pipes. Neft. khoz. 39 no.5:28-30 My '61. (MIRA 14:9)

(Boring machinery) (Mechanical wear)

APPROVED FOR RELEASE: 09/17/2001 CIA-RDP86-00513R000722820004-6"

"APPROVED FOR RELEASE: 09/17/2001 CIA-RDP86-00513R000722820004-6

KISEL'MAN, M.L.

Possibility of the experimental determination of the maximum dynamic load on a bit by the dynamic impression method. Izv. vys. ucheb. zav.; neft' i gaz 4 no.5:47-51 '61. (MIRA 15:2)

1. Groznenskiy neftyanoy institut.
(Oil well drilling)

APPROVED FOR RELEASE: 09/17/2001 CIA-RDP86-00513R000722820004-6"

"APPROVED FOR RELEASE: 09/17/2001 CIA-RDP86-00513R000722820004-6

KISEL'MAN, M.L.; GRACHEV, K.V.

Experience of the Groznyy Petroleum Association in the restoration of worn tool joints. Neft. khoz. 43 no.1:52-54 Ja '65.

(MIRA 18:3)

APPROVED FOR RELEASE: 09/17/2001 CIA-RDP86-00513R000722820004-6"

"APPROVED FOR RELEASE: 09/17/2001 CIA-RDP86-00513R000722820004-6

KOLDOBSKIY, A.G.; MEDVEDEV, S.I.; PISKOPPEL', F.G.; YAKOBSON, M.G. Prinimali uchastiye: BERKHIN, I.B.; OSLIKOVSKAYA, Ye.S.; PEREKISLOVA, A.M.; LITVIN, V.M.; PARKHOMENKO, Ye.V.; STOTIK, A.M.; SHAPIRO, T.I.; STRUMILIN, S.G., akad., glav. red.; ALEKSENKO, G.V., red.; ANISIMOV, N.I., red.; VOLODARSKIY, L.M., red.; GERSHBERG, S.R., redaktor; red.; PETROV, A.I., red.; POSVYANSKIY, S.S., red.; BAZAROVA, G.V., kand. ekonom. nauk, starshiy nauchnyy red.; KISEL'MAN, S.M., starshiy nauchnyy red.; LIVANSKAYA, F.V., kand. ekonom. nauk, starshiy nauchnyy red.; GLAGOLEV, V.S., nauchnyy red.; NEDBAYEV, V.I., nauchnyy red.; TUMANOVA, N.L., nauchnyy red.; TOVMASYAN, M.E., red.; BLAGODARSKAYA, Ye.V., mladshiy red.; SHUSTROVA, V.M., mladshiy red.; ZENTSEL'SKAYA, Ch.A., tekhn. red.

[The economic life of the U.S.S.R.; chronicle of events and facts, 1917-1959] Ekonomicheskaia zhizn' SSSR; khronika sobytii i faktov 1917-1959. Glav. red. S.G.Strumilin. Chleny red. kollegii: Aleksenko i dr. Moskva, Gos. nauchn.izd-vo "Sovetskaia entsiklopediia," 1961. 779 p. (MIRA 14:10)

1. TSentral'naya nauchnaya sel'skokhozyaystvennaya biblioteka Vsesoyuznoy akademii sel'skokhozyaystvennykh nauk im. Lenina (for Litvin, Parkhomenko, STOTIK, Shapiro).
(Russia—Economic conditions)

APPROVED FOR RELEASE: 09/17/2001 CIA-RDP86-00513R000722820004-6"

"APPROVED FOR RELEASE: 09/17/2001 CIA-RDP86-00513R000722820004-6

YEFIMOV, A.N., glav. red.; BACHURIN, A.V., red.; VOLODARSKIY, L.M., red.; GERSHBERG, S.R., red.; GINZBURG, S.Z., red.; DUNDUKOV, G.F., red.; KIRZHNER, D.M., red.; KLIMENKO, K.I., red.; KOMAROV, F.V., red.; KOROL'KOV, A.N., red.; KRYLOV, P.N., red.; LIVANSKAYA, F.V., red.; LOKSHIN, E.Yu., red.; OSTROVITYANOV, K.V., red.; POSVYANSKIY, S.S., red.; PRUDENSKIY, G.A., red.; RAZUMOV, N.A., red.; RUMYANTSEV, A.F., red.; TATUR, S.K., red.; SHUKHGAL'TER, L.Ya., red.; BAZAROVA, G.V., starshiy nauchnyy red., kand. ekon. nauk; KISEL'MAN, S.M., starshiy nauchnyy red.; GLAGOLEV, V.S., nauchnyy red.; TUMANOVA, N.L., nauchnyy red.; BLAGODARSKAYA, Ye.V., mlad. red.; SHUSTROVA, V.M., mladshiyy red.; GAYDUKOV, Yu.A., kand. ekon. nauk, red.; ZBARSKIY, M.I., red.; LOZOVOY, Ya.D., red.; SERGEYEV, A.V., dots., red.; KHEYFETS, L.M., kand. tekhn. nauk, red.; LYUBOVICH, Yu.O., kand. ekon. nauk, red.; SYSOYEV, P.V., red.; KOSTI, S.D., tekhn. red.

[Economic encyclopedia; industry and construction]Ekonomicheskaia entsiklopediia; promyshlennost' i stroitel'stvo. Chleny red. kollegii: A.V.Bachurin i dr. Moskva, Gos.nauchn. izd-vo "Sovetskaia entsiklopediia." Vol.1. A - M. 1962. 951 p. (MIRA 15:10)

(Russia--Industries--Dictionaries)
(Construction industry--Dictionaries)

APPROVED FOR RELEASE: 09/17/2001 CIA-RDP86-00513R000722820004-6"

"APPROVED FOR RELEASE: 09/17/2001 CIA-RDP86-00513R000722820004-6

KISEL'MAN, Ya.

More on accounting for retail turnover and glass containers.
Sov. torg. 35 no.2:43-44 F '61. (MIRA 14:3)

1. Nachal'nik planovogo otdela gorodskogo Upravleniya torgovli, Khar'kov.
(Kharkov—Glass containers)
(Retail trade—Accounting)

APPROVED FOR RELEASE: 09/17/2001 CIA-RDP86-00513R000722820004-6"

"APPROVED FOR RELEASE: 09/17/2001 CIA-RDP86-00513R000722820004-6

KISEL'MAN, Ya. (Khar'kov)

Planning and accounting of turnover expenses on vegetables.
Sov. torg. 35 no.12:42 D '61. (MIRA 14:11)
(Vegetable trade)

APPROVED FOR RELEASE: 09/17/2001 CIA-RDP86-00513R000722820004-6"

"APPROVED FOR RELEASE: 09/17/2001 CIA-RDP86-00513R000722820004-6

KISEL'NIKOV, A.M.

USSR/ Miscellaneous - Conferences

Card 1/1 Pub. 133 - 16/18

Authors : Lokshin, A. M.; Adyakin, N. M.; Kisel'nikov, A. M.; and Miroshin, A. I., Engineers

Title : To improve the performance stability of transmitting installations

Periodical : Vest. svyazi 2, 28 - 29, Feb 1955

Abstract : Minutes are presented of a discussion held on the subject of improving the performance stability of telephone-telegraph and radio transmitting installations in the USSR.

Institution: .....

Submitted: .....

APPROVED FOR RELEASE: 09/17/2001 CIA-RDP86-00513R000722820004-6"

"APPROVED FOR RELEASE: 09/17/2001 CIA-RDP86-00513R000722820004-6

86125

169500

S/112/59/000/012/057/097
A052/A001

Translation from: Referativnyy zhurnal, Elektrotekhnika, 1959, No. 12, p. 158, # 25000

AUTHOR: Kisel'nikov, V.B.

TITLE: Electric Relay Type Servo Drive in Remote Control Systems for Diesels

PERIODICAL: V sb.: Dvigateli vnutr. sgoraniya. (TsNIDI, 33). Moscow-Leningrad, Mashgiz, 1958, pp. 66-90

TEXT: Some problems of the theory, calculation and design of the electric relay type servo drive, working on alternating current are dealt with. The drive is used for the remote control of diesels. The possible modes of operation of the servo drive are shown: a) that of performance, b) that of tracking. At the same time it is pointed out that the remote control servo drive is used predominantly for the performance operation. For the latter an analysis of the convergence process is made for the case of the delay in switching over the servomotor being disregarded. The process of natural oscillations in presence of a constant delay is analyzed. The principal relation of the relay servo drive dynamics (with an al-

Card 1/2

Card 2/2

APPROVED FOR RELEASE: 09/17/2001 CIA-RDP86-00513R000722820004-6

"APPROVED FOR RELEASE: 09/17/2001 CIA-RDP86-00513R000722820004-6

KISEL'NIKOV, V. B. Cand Tech Sci -- "Study of automatic devices for the remote control of the speed and levelling of diesel loads." Len, 1960 (Len Shipbuilding Inst). (KL, 1-61, 193)

APPROVED FOR RELEASE: 09/17/2001 CIA-RDP86-00513R000722820004-6"

"APPROVED FOR RELEASE: 09/17/2001 CIA-RDP86-00513R000722820004-6

1ST AND 2ND ORDERS | 3RD AND 4TH ORDERS

PROCESSES AND PROPERTIES INDEX

BC

B-II-4

Hyposulphite method of azo-dye analysis. V. I. MINAEV and V. N. KUZNETSOV (Trans. Inst. Chem. Tech. Ivanovo, 1935, [illegible]).—20 c.c. of 20% Na K tartrate are added to 100 c.c. of a 0·1% solution of the dye, and the mixture is heated, and titrated in a CO_2 atm. with 0·34% $Na_2S_2O_4$ (I). (I) is standardised against Orange II, and should contain 40 c.c. of 0·1*N*-NaOH per litre, when the titre remains const. for ≥ 9 days, in an atm. of H_2. R. T.

ASM-SLA METALLURGICAL LITERATURE CLASSIFICATION

APPROVED FOR RELEASE: 09/17/2001 CIA-RDP86-00513R000722820004-6"

"APPROVED FOR RELEASE: 09/17/2001 CIA-RDP86-00513R000722820004-6

1ST AND 2ND ORDERS

PROCESSES AND PROPERTIES INDEX

3RD AND 4TH ORDERS

CA

7

Analysis of technical 3-nitroalizarin. V. N. Kisel'nikov, B. N. Fedorov and V. I. Minaev. Russ. 51,409, July 31, 1937. 3-Nitroalizarin is washed with water, heated with an aromatic amine, treated with H_2O, the mol. compd. of nitroalizarin with amine filtered off, washed with H_2O, and decompd. on the filter with inorg. acid. The aromatic amine is then detd. in the filtrate by the bromide-bromate method.

COMMON ELEMENTS

OTHER MATERIALS INDEX

ASM-SLA METALLURGICAL LITERATURE CLASSIFICATION

MATERIALS INDEX

AUTHOR INDEX

APPROVED FOR RELEASE: 09/17/2001 CIA-RDP86-00513R000722820004-6"

"APPROVED FOR RELEASE: 09/17/2001 CIA-RDP86-00513R000722820004-6

1ST AND 2ND ORDERS

3RD AND 4TH ORDERS

PROCESSES AND PROPERTIES INDEX

CA

10

Separation of technical xylidine mixtures. V. V. F. Borodkin and V. N. Kisel'nikov. *J. Applied Chem.* (U.S.S.R.) 18, 59-61(1945).—Tech. xylidine mixt. (100 g., contg. 65% *m*-isomers and 35% *p*-isomers) is stirred with AcOH until cool and the ppt. of xylidine acetate is filtered off and washed with AcOH; optimum results are obtained with 80% AcOH in 80% mol. amt. at 20°, when a 45-7% yield of ppt. is obtained of 90-2% pure acetate of the *m*-isomer (1,3-dimethyl-4-aminobenzene). The mother liquor is treated with 1 equiv. of dil. H_2SO_4, cooled to 20°, and the pptd. sulfate of the *p*-isomer (1,4-dimethyl-2-aminobenzene), mixed with the sulfate of the *o*-isomer, is filtered off (the ppt. analyzing 83% *p*-isomer) in 25% yield. The final mother liquor upon neutralization gave residual xylidines averaging 44% *o*- and *p*-isomers and 56% *m*-isomer. G. M. Kosolapoff

ASM-SLA METALLURGICAL LITERATURE CLASSIFICATION

APPROVED FOR RELEASE: 09/17/2001 CIA-RDP86-00513R000722820004-6"

"APPROVED FOR RELEASE: 09/17/2001 CIA-RDP86-00513R000722820004-6

PROCESSES AND PROPERTIES INDEX

CA

21

Pyrolysis of acid tar. V. N. Kiel'nikov and V. I. Serdyukov. *J. Applied Chem.* (U.S.S.R.) 19, 893-9 (1946)(in Russian).—Petroleum tar of d. 1.009, coke yield 12.3% (ash-free), free C 11.7, sol. in petr. ether 8.5, ash 2.9, free H_2SO_4 and sulfonic acids 2.4, preheated to 120-30° and heated at 600 and 800° for 30-45 min., at rates of feeding of 3.0 to 4.0 g./min., gave, at 600 and 800°, yields in gas, coke, soot C, resinous products, of 22.0, 10.0, 6.3, 71.7 and 31.2, 12.0, 7.5, 49.3%, resp. The gas produced at 600° contains C_nH_m (and other unsatd.) 41.6 and H_2 11.9 as against 27.1 and 26.8 at 800°; caloric value 12,688 and 10,357 cal./cu. m., resp. There is little change in the other components. N. Thon

ASM-SLA METALLURGICAL LITERATURE CLASSIFICATION

APPROVED FOR RELEASE: 09/17/2001 CIA-RDP86-00513R000722820004-6"

"APPROVED FOR RELEASE: 09/17/2001 CIA-RDP86-00513R000722820004-6

KISEL'NIKOV, V.N., RADUGIN, G. A.,

Textile Finishing

Ways of diminishing stretching on dressing machines. Tekst. prom. 12 no. 3, 1952.

Monthly List of Russian Accessions, Library of Congress, April 1952. UNCLASSIFIED

APPROVED FOR RELEASE: 09/17/2001 CIA-RDP86-00513R000722820004-6"

"APPROVED FOR RELEASE: 09/17/2001 CIA-RDP86-00513R000722820004-6

KISEL'NIKOV, V.N.; KAZAS, T.S.

Thermochemistry of substitution in an aromatic ring. Part 1: Heat effect on resorcin sulfonation. Zhur.ob.khim. 27 no.10:2877-2884 O '57. (MIRA 11:4)

1.Ivanovskiy khimiko-tekhnologicheskiy institut.
(Resorcinol) (Sulfonation)

APPROVED FOR RELEASE: 09/17/2001 CIA-RDP86-00513R000722820004-6"

"APPROVED FOR RELEASE: 09/17/2001 CIA-RDP86-00513R000722820004-6

SOV/137-59-3-7101

Translation from: Referativnyy zhurnal. Metallurgiya, 1959, Nr 3, p 309 (USSR)

AUTHORS: Kisel'nikov, V. N., Uspenskiy, V. P.

TITLE: Effect of Vacuum on Corrosion of Metals (Vliyaniye vakuuma na korroziyu metallov)

PERIODICAL: Tr. Ivanovsk. khim.-tekhnol. in-ta, 1958, Nr 7, pp 96-101

ABSTRACT: The authors studied the effect of preliminary vacuum treatment of the surface of EYal-T and 18/8 grade steels on their resistance to corrosion in 98% HNO_3. It was found that the steels tested are stable after the vacuum treatment of their surface within the 12.10^{-5} mm Hg pressure range and unstable from 12.10^{-5} mm Hg on down. The length of vacuum treatment of specimens is 4 or 8 hours, soaking in HNO_3 is 24 hours. The preliminary vacuum treatment of Zn powder used for reduction increases its reactivity.

G. M.

Card 1/1

APPROVED FOR RELEASE: 09/17/2001 CIA-RDP86-00513R000722820004-6"

"APPROVED FOR RELEASE: 09/17/2001 CIA-RDP86-00513R000722820004-6

Translation from: Referativnyy zhurnal. Metallurgiya, 1959, Nr 3, p 309 (USSR) SOV/137-59-3-7103

AUTHOR: Kisel'nikov, V. N.

TITLE: Corrosion and the Electrochemical Behavior of Stainless Steels in Aggressive Media. Communication 1. Corrosion of Stainless Steels in Nitric Acid (Korroziya i elektrokhimicheskoye povedeniye nerzhaveyushchikh staley v agressivnykh sredakh. Soobshcheniye 1. Korroziya nerzhaveyushchikh staley v azotnoy kislote)

PERIODICAL: Tr. Ivanovsk. khim.-tekhnol. in-ta, 1958, Nr 7, pp 102-113

ABSTRACT: The author investigated the corrosion of stainless steels of the 18%-Cr and 8%-Ni type, EI-100 containing 9.07% Mn (I), EYal-T with 0.80% Ti (II), EI-401 with 2.35% Mo (III), and EI-403 with 2.20% Mo and 1.47% Nb (IV) in 98% and 50% HNO_3 at 95 and 20°C. The steels tested can be classified as stable in 98% HNO_3 at 20° in either complete or partial immersion and in acid vapors. The rate of corrosion (RC) under complete immersion is, on the average, ~0.1 mm per year The steels investigated can be arranged in the following order of corrosion resistance: II, IV, III, and I. Annealed steel I (temperature of annealing 1050°C, time 2 hours) was appreciably more

Card 1/2

APPROVED FOR RELEASE: 09/17/2001 CIA-RDP86-00513R000722820004-6"

"APPROVED FOR RELEASE: 09/17/2001 CIA-RDP86-00513R000722820004-6

SOV/137-59-3-7103

Corrosion and the Electrochemical Behavior of Stainless Steels (cont.)

resistant than unannealed steel. The effect of annealing on other steels is insignificant. In 98% HNO_3 at 95° unannealed steels III, IV, and II are corrosion-resistant. Unannealed steel I is not passivated under these conditions. Annealed steels III, IV, and II are not passivated under complete immersion either, but have a greater RC than unannealed steels. The RC of all the steels tested in acid vapors is very great while the RC under partial immersion is approximately halfway between the rates under complete immersion and in acid vapors. In 50% HNO_3, at 20°, all the steels are highly resistant. They can be classified in the following order of resistance to corrosion: II, III, IV and I. During the tests in acid vapors the RC does not differ substantially from RC under complete immersion. In 50% HNO_3 at 95° the same order of corrosion resistance prevails. Corrosion resistance of steel I is considerably improved after preannealing at 1050°.

R. A.

Card 2/2

APPROVED FOR RELEASE: 09/17/2001 CIA-RDP86-00513R000722820004-6"

"APPROVED FOR RELEASE: 09/17/2001 CIA-RDP86-00513R000722820004-6

SOV/137-59-3-7104

Translation from: Referativnyy zhurnal. Metallurgiya, 1959, Nr 3, p 309 (USSR)

AUTHORS: Kisel'nikov, V. N., Lapshin, B. M.

TITLE: Corrosion and Electrochemical Behavior of Stainless Steels in Aggressive Media. Communication 2. Electrode Potentials of Stainless Steels in Nitric Acid (Korroziya i elektrokhimicheskoye povedeniye nerzhaveyushchikh staley v agressivnykh sredakh. Soobshcheniye 2. Elektrodnyye potentsialy nerzhaveyushchikh staley v azotnoy kislote)

PERIODICAL: Tr. Ivanovsk. khim. tekhnol. in-ta, 1958, Nr 7, pp 114-120

ABSTRACT: The authors measured the electrode potentials of EI-100, EYa 1-T, EI-401, and EI-403 steels in 98 and 50% HNO_3 at 95 and 20°C. The electrode potentials of the steels investigated correspond to their corrosion behavior, so that a sharp displacement of the potential in the negative sense corresponds to an increase in the rate of corrosion. For example, in EI-100 steel in the first 25 hours of the test a relatively slow growth of corrosion rate with time is observed, accompanied by a slow decrease of the potential. During the subsequent 25 hours of testing the rate of corrosion increased greatly, while the potential of the metal shifted sharply towards negative values. The

Card 1/2

APPROVED FOR RELEASE: 09/17/2001 CIA-RDP86-00513R000722820004-6"

"APPROVED FOR RELEASE: 09/17/2001 CIA-RDP86-00513R000722820004-6

author noted that in a number of cases (for EI-100 and EYa 1 - T steels) the steel alternates from the passive to the active state with gradually decreasing passivation periods. The relative variation in potential in this process was ~ 1.24 v. Curves for the anodic polarization of steel in 50% HNO_3 at 20° were plotted.

R. A.

APPROVED FOR RELEASE: 09/17/2001 CIA-RDP86-00513R000722820004-6"

"APPROVED FOR RELEASE: 09/17/2001 CIA-RDP86-00513R000722820004-6

SOV/137-59-3-7105

Translation from: Referativnyy zhurnal. Metallurgiya, 1959, Nr 3, p 309 (USSR)

AUTHORS: Kisel'nikov, V. N., Lapshin, B. M.

TITLE: Corrosion and Electrochemical Behavior of Stainless Steels in Aggressive Media. Communication 3. Corrosion of Stainless Steels in Boiling Solutions of Zinc Chloride (Korroziya i elektrokhimicheskoye povedeniye nerzhaveyushchikh staley v agressivnykh sredakh. Soobshcheniye 3. Korroziya nerzhaveyushchikh staley v kipyashchikh rastvorakh khlorida tsinka)

PERIODICAL: Tr. Ivanovsk. khim.-tekhnol. in-ta, 1958, Nr 7, pp 121-125

ABSTRACT: The authors investigated the resistance to corrosion of Cu, stainless Cr-Ni steels containing Mn (EI-100), Ti (EYa 1-T), Mo (EI-404)(sic!), Mo and Nb (EI-403), thermosilide, and antichlor in boiling 35, 55, and 70% $ZnCl_2$ solutions at atmospheric pressure. Cu is resistant to boiling $ZnCl_2$ solutions at concentrations $\leq 55\%$. Thermosilide, EI-401 (sic!), and EI-403 are resistant at concentrations $\leq 35\%$, while EYa 1-T and EI-100 are nonresistant in 35% $ZnCl_2$. Antichlor which proved resistant under all testing conditions can be recommended as structural material for the manufacture of evaporators for fibration of cellulose.

R.A.

Card 1/1

APPROVED FOR RELEASE: 09/17/2001 CIA-RDP86-00513R000722820004-6"

"APPROVED FOR RELEASE: 09/17/2001 CIA-RDP86-00513R000722820004-6

SOV/137-59-3-7106

Translation from: Referativnyy zhurnal. Metallurgiya, 1959, Nr 3, p 310 (USSR)

AUTHORS: Kisel'nikov, V. N., Uspenskiy, V. P.

TITLE: Corrosion and Electrochemical Behavior of Stainless Steels in Aggressive Media. Communication 4. Corrosion of Stainless Steels in Sulfuric Acid (Korroziya i elektrokhimicheskoye povedeniye nerzhaveyushchikh staley v agressivnykh sredakh. Soobshcheniye 4. Korroziya nerzhaveyushchikh staley v sernoy kislote)

PERIODICAL: Tr. Ivanovsk. khim.-tekhnol. in-ta, 1958, Nr 7, pp 126-129

ABSTRACT: The authors investigated the corrosion of stainless steels EI-100 (I), EYa 1-T (II), EI-401 (III), and EI-403 (IV) with 93% and 50% H_2SO_4 at 20 and 95°C. All the steels investigated can be considered resistant to 93% H_2SO_4 at 20°. At 95° II, III, and IV steels are passivated. Steel I has a very high corrosion rate. In 50% H_2SO_4 at 20° I steel is completely nonresistant. During the first 20 minutes of testing its corrosion is 200 g/m^2 per hour, but it is then decreased by ~66%. III steel is completely resistant, while II and IV steels exhibit little resistance. In 50% H_2SO_4 at 95° all the steels are very rapidly corroded.

R. A.

Card 1/1

APPROVED FOR RELEASE: 09/17/2001 CIA-RDP86-00513R000722820004-6"

"APPROVED FOR RELEASE: 09/17/2001 CIA-RDP86-00513R000722820004-6

S/153/60/003/005/016/016
B013/B058

AUTHORS: Suprunov, V. A., Kisel'nikov, V. N.

TITLE: Effect of High-frequency Annealing on Structure and Corrosion Resistance of Austenitic Chrome-nickel Steels

PERIODICAL: Izvestiya vysshikh uchebnykh zavedeniy. Khimiya i khimicheskaya tekhnologiya, 1960, Vol. 3, No. 5, pp. 947-951

TEXT: The effect of inductive high-frequency annealing on structure and corrosion resistance of austenitic chrome-nickel steels was studied in this paper. Industrial steel sheets of the grades 1Х18Н9Т (1Kh18N9T) and Х18Н12М3Т (Kh18N12M3T) were investigated. The chemical composition of these steels is tabulated. Specimens of 20x20x3 mm size were hardened by means of a high-frequency installation of the type ГЛ-3-10 (GL-3-10). Hardening was conducted at 850°, 1000°, 1100°, and 1300°C. The annealed specimens were ground, and submitted to the Vickers hardness test (Fig.1). It was shown that a correlation exists between conditions of thermal treatment and structure of the steels. The structure showed the highest amount of separated chromium carbides after hardening at 850°C (Fig. 2a);

Card 1/3

APPROVED FOR RELEASE: 09/17/2001 CIA-RDP86-00513R000722820004-6"

"APPROVED FOR RELEASE: 09/17/2001 CIA-RDP86-00513R000722820004-6

Effect of High-frequency Annealing on Structure and Corrosion Resistance of Austenitic Chrome-nickel Steels

S/153/60/003/005/016/016
B013/B058

hardening at 1100°C leads to a favorable distribution of the components (Fig. 2b); hardening at 1300°C results in grain coarsening (Fig. 2c). The corrosion resistance was tested in boiling 65% nitric acid (Fig. 3). It was established that the corrosion resistance of high-frequency annealed (1100°C) and subsequently quenched specimens was 2-3 times higher than their initial corrosion resistance. The specimens hardened at 1300°C showed a lower corrosion resistance (Fig. 4). This probably depends on the grain size. The corrosion resistance of steels in aggressive media depends on their electrode potential. This was measured by the conventional method of compensation (Fig. 5). The measurements showed that the initial potential is 0.9-1.0 v. At the beginning of the experiments, a potential jump was ascertained for 1Kh18N9T, in contrast to Kh18N12M3T. The potential dropped after 20-25 hrs, and in all experiments showed a rising tendency in the long run. This rise of potential can be traced back to the passivation of the specimen surface. The experiments thus showed that the hardness of high-frequency annealed steels changes according to a curve with a maximum at 900°C. I. N. Kidin is mentioned. There are 5 figures, 1 table, and 11 references: 8 Soviet, 1 German, and 1 US.

Card 2/3

APPROVED FOR RELEASE: 09/17/2001 CIA-RDP86-00513R000722820004-6"

"APPROVED FOR RELEASE: 09/17/2001 CIA-RDP86-00513R000722820004-6

Effect of High-frequency Annealing on Structure and Corrosion Resistance of Austenitic Chrome-nickel Steels

S/153/60/003/005/016/016
B013/B058

ASSOCIATION: Ivanovskiy khimiko-tekhnologicheskiy institut, Kafedra tekhnologii metallov i kafedra protsessov i apparatov (Ivanovskiy Institute of Chemical Technology, Department of Metal Technology and Department of Processes and Apparatus)

SUBMITTED: January 5, 1959

Card 3/3

APPROVED FOR RELEASE: 09/17/2001 CIA-RDP86-00513R000722820004-6"

"APPROVED FOR RELEASE: 09/17/2001 CIA-RDP86-00513R000722820004-6

SUPRUNOV, V.A.; KISEL'NIKOV, V.N.

Effect of the heat treatment by a high frequency current on the corrosion of welded joints of steel 1Kh18N9T. Izv.vys.ucheb.-zav.;khim.i khim.tekh. 5 no.2:336-339 '62. (MIRA 15:8)

1. Ivanovskiy khimiko-tekhnologicheskiy institut, kafedra tekhnologii metallov i protsessov i apparatov.
(Steel—Corrosion) (Steel—Heat treatment)

APPROVED FOR RELEASE: 09/17/2001 CIA-RDP86-00513R000722820004-6"

"APPROVED FOR RELEASE: 09/17/2001 CIA-RDP86-00513R000722820004-6

GREK, F.Z.; KISEL'NIKOV, V.N.

Viscosity of the fluidized bed. Zhur.prikl.khim. 35 no.10: 2235-2241 O '62. (MIRA 15:12)

1. Kafedra protsessov i apparatov Ivanovskogo khimiko-tekhnologicheskogo instituta.
(Fluidization) (Viscosity)

APPROVED FOR RELEASE: 09/17/2001 CIA-RDP86-00513R000722820004-6"

"APPROVED FOR RELEASE: 09/17/2001 CIA-RDP86-00513R000722820004-6

GREK, F.Z.; KISEL'NIKOV, V.N.

Determination of the porosity of fluidization systems using the acoustic method. Izv.vys.ucheb.zav.;khim.i khim.tekh. 6 no.4:659-667 '63. (MIRA 17:2)

1. Ivanovskiy khimiko-tekhnologicheskiy institut. Kafedra protsessov i apparatov khimicheskoy tekhnologii.

APPROVED FOR RELEASE: 09/17/2001 CIA-RDP86-00513R000722820004-6"

"APPROVED FOR RELEASE: 09/17/2001 CIA-RDP86-00513R000722820004-6

SUPRUNOV, V.A.; KISEL'NIKOV, V.N.

Properties of iron powder-based pseudoalloys impregnated in glass melts. Izv.vys.ucheb.zav.;khim.i khim.tekh. 6 no.4:683-687 '63. (MIRA 17:2)

1. Ivanovskiy khimiko-tekhnologicheskiy institut. Kafedra tekhnologii metallov i kafedra protsessov i apparatov khimicheskoy tekhnologii.

APPROVED FOR RELEASE: 09/17/2001 CIA-RDP86-00513R000722820004-6"

"APPROVED FOR RELEASE: 09/17/2001 CIA-RDP86-00513R000722820004-6

ACCESSION NR: AP4037236 S/0153/64/007/001/0156/0163

AUTHOR: Suprunov, V. A.; Kisel'nikov, V. N.

TITLE: The intercrystalline corrosion of 18-8 type steel.

SOURCE: Ivuz. Khimiya i khimicheskaya tekhnologiya, v. 7, no. 1, 1964, 156-163

TOPIC TAGS: 18-8 steel, intercrystalline corrosion, corrosion, general corrosion, grain surface structure, heat treatment, element solution, hardness, tempering, annealing, phase precipitation, specific resistance, intercrystalline corrosion mechanism, rate, iron chromium ratio, manganese solubility, nickel solubility, iron solubility, chromium solubility

ABSTRACT: This study included an examination of the microdistribution of the grain surface structure of 18-8 type steels as affected by different heat treatment, a determination of the conditions leading to development of intercrystalline corrosion with time, and a determination of the relative amount of the elements going into solution during general and structural corrosion. 1Kh18N, 1Kh18N9T, 1KhN12MZT and 1Kh18NIIB steels were annealed at 850, 1000 and 1100C by conventional and induction heating and tempered at 650C. Intercrystalline corrosion was examined in

Card 1/3

APPROVED FOR RELEASE: 09/17/2001 CIA-RDP86-00513R000722820004-6"

"APPROVED FOR RELEASE: 09/17/2001 CIA-RDP86-00513R000722820004-6

ACCESSION NR: AP4037236

various solutions: (1) soaking in 20% HNO_3 + 1% NaF; (2) boiling in 65% HNO_3; and (3) boiling in H_2SO_4 acidified $CuSO_4$. The amount of general corrosion was determined by weight loss; and the amount of intercrystalline corrosion was determined by change in specific resistance. In structures tempered at 1100C the hardness is evenly distributed along the boundaries and basic background of the grain. After tempering at 650C, excess phases precipitated at the grain boundaries, increasing the hardness to 724-751 kg/mm^2. The process of intercrystalline corrosion growth can be divided into several stages, each having characteristic features. In the first stage the rate of general and intercrystalline corrosion are equal and cannot be distinguished by external features. In the second stage the rate of intercrystalline corrosion significantly exceeds that of general corrosion and they can be quantitatively divided. The third stage is characterized by precipitation of individual grains from the surface and a rapid rise in electric resistance. Group precipitation of the grains occurs in the fourth stage where the corrosion rate decreases due both to the corrosion products covering the intercrystalline area and to a retarding exchange between the solution and corroded surface. The breakdown mechanism by general and intercrystalline corrosion in 18-8 steels is different. The relative Fe to Cr content in the solution from general corrosion ranges from

APPROVED FOR RELEASE: 09/17/2001 CIA-RDP86-00513R000722820004-6"

"APPROVED FOR RELEASE: 09/17/2001 CIA-RDP86-00513R000722820004-6

ACCESSION NR: AP4037236

1.44 to 4.43. In the presence of intercrystalline corrosion this ratio reaches 18.5. Hence intercrystalline corrosion is characterised by transition of Fe into solution, and general corrosion, by more Cr going into solution. The Mn content in solution did not depend on the type of corrosion. The amount of Ni in solution decreased somewhat with an increase in annealing temperature. Orig. art. has: 4 figures, 4 tables and 1 equation.

ASSOCIATION: Ivanovskiy khimiko-tekhnologicheskiy institut, Kafedra tekhnologii metallov i protsessov i apparatov (Ivanovo Chemical Engineering Institute, Department of Metal Technology and Processes and Apparatus)

SUBMITTED: 28Apr63 ENCL: 00

SUB CODE: MM NO REF SOV: 006 OTHER: 004

Card 3/3

APPROVED FOR RELEASE: 09/17/2001 CIA-RDP86-00513R000722820004-6"

"APPROVED FOR RELEASE: 09/17/2001 CIA-RDP86-00513R000722820004-6

GREK, F. Z.; KISEL'NIKOV, V. N.

"Apparent viscosity of fluidized bed as a measure of its aggregation."

report submitted for 2nd All-Union Conf on Heat & Mass Transfer, Minsk, 4-12 May 1964.

Ivanov Chemical Technology Inst.

APPROVED FOR RELEASE: 09/17/2001 CIA-RDP86-00513R000722820004-6"

"APPROVED FOR RELEASE: 09/17/2001 CIA-RDP86-00513R000722820004-6

KISEL'NIKOV, V.N.; DEMSHIN, V.Ya.; SHIROKOV, S.G.; Prinimali uchastiye: MUKHINA, L.V.; PRISHCHEPINA, A.I.; LOGUNOVA, G.V.; LAPSHINA, L.M.; PENYAYEVA, L.A.

Production of granulated carbamide from the melt of the distillation column of the first stage in a fluidized bed. Izv. vys. ucheb. zav.; khim. i khim. tekh. 8 no.3:504-510 '65. (MIRA 18:10)

1. Ivanovskiy khimiko-tekhnologicheskiy institut, kafedra protsessov i apparatov.

APPROVED FOR RELEASE: 09/17/2001 CIA-RDP86-00513R000722820004-6"

"APPROVED FOR RELEASE: 09/17/2001 CIA-RDP86-00513R000722820004-6

L 06345-67 EWP(k)/EWT(d)/EWT(m)/EWP(w)/EWP(v)/EWP(t)/ETI IJP(c) EM/JD/HM/WB
ACC NR: AP6030327 (A) SOURCE CODE: UR/0153/66/009/003/0502/0506

AUTHOR: Suprunov, V. A.; Kisel'nikov, V. N.

ORG: Chemical Machinery Department, Ivanovo Chemical Engineering Institute (Kafedra khimicheskogo mashinostroyeniya, Ivanovskiy khimiko-tekhnologicheskiy institut)

TITLE: Effect of welding stresses on the corrosion of weld joints of 1Kh18N9T steel

SOURCE: IVUZ. Khimiya i khimicheskaya tekhnologiya, v. 9, no. 3, 1966, 502-506

TOPIC TAGS: welding, thermal stress, stress corrosion, STEEL / 1Kh18N9T STEEL

ABSTRACT: An attempt was made to determine the effect of thermal stress and of the structural factor on the nature and rate of knife-line and general corrosion of a weld joint of 1Kh18N9T steel in 20% HNO_3+1%NaF and boiling 65% HNO_3. This steel was convenient to study because it has no tendency toward intercrystalline corrosion after being exposed for a short time to critical temperatures (450-850° during welding). The welding was carried out at 60, 80, 100 and 120 A with AN-20, TsL-2, TsL-11 and ENTU-3 electrodes. It was found that in addition to structural factors, which cause knife-line corrosion, the latter is also due to thermal and shrinking stresses. The character of the distribution of longitudinal and transverse thermal stresses in the weld joint was determined for various welding conditions. The highest values are reached at the fusion line, where the thermal and shrinking stresses combine. Specimens hardened with high-frequency currents did not show any signs of knife-line corro-

Card 1/2 UDC: 620.196.2+620.194.2

APPROVED FOR RELEASE: 09/17/2001 CIA-RDP86-00513R000722820004-6"

"APPROVED FOR RELEASE: 09/17/2001 CIA-RDP86-00513R000722820004-6

L 06345-67

ACC NR: AP6030327

sion after a 3-hour exposure to boiling 65% HNO_3. Orig. art. has: 5 figures, 1 table and 3 formulas.

SUB CODE: 11/ SUBM DATE: 15Jan65/ ORIG REF: 009

Card 2/2 MLE

APPROVED FOR RELEASE: 09/17/2001 CIA-RDP86-00513R000722820004-6"

"APPROVED FOR RELEASE: 09/17/2001 CIA-RDP86-00513R000722820004-6

NEMTSEV, Z.F., kand.tekhn.nauk; KISEL'NIKOVA, G.Ye., inzh.

Concerning the determination of optimum vacuum for the central pumps of electric power plants. Elek. sta. 32 no.11:28-29 N '61. (MIRA 14:11)

(Electric power plants)

APPROVED FOR RELEASE: 09/17/2001 CIA-RDP86-00513R000722820004-6"

"APPROVED FOR RELEASE: 09/17/2001 CIA-RDP86-00513R000722820004-6

KISEL'NIKOVA, O.V., kand.tekhn.nauk

Experience of the Poltava Locomotive Repair Plant in the cementation of parts. Trudy MIIT no.160:19-26 '62.

(MIRA 16:2)

(Poltava--Locomotive works) (Cementation (Metallurgy))

APPROVED FOR RELEASE: 09/17/2001 CIA-RDP86-00513R000722820004-6"

"APPROVED FOR RELEASE: 09/17/2001 CIA-RDP86-00513R000722820004-6

D'YAKONOV, V.N., kand.tekhn.nauk; RUBIN, G.V., kand.tekhn.nauk;
KISEL'NIKOVA, O.V., kand.tekhn.nauk

Electric furnace bath for isothermal hardening. Trudy MIIT no.160:27-30 '62. (MIRA 16:2)
(Furnaces, Heat treating)

APPROVED FOR RELEASE: 09/17/2001 CIA-RDP86-00513R000722820004-6"

"APPROVED FOR RELEASE: 09/17/2001 CIA-RDP86-00513R000722820004-6

KISELOV, A. A.

85

PHASE I BOOK EXPLOITATION SOV/5556

Moscow. Institut stali.

Novoye v teorii i praktike proizvodstva martenovskoy stali (New [Developments] in the Theory and Practice of Open-Hearth Steelmaking) Moscow, Metallurgizdat, 1961. 439 p. (Series: Trudy Mezhvuzovskogo nauchnogo soveshchaniya) 2,150 copies printed.

Sponsoring Agency: Ministerstvo vysshego i srednego spetsial'nogo obrazovaniya RSFSR. Moskovskiy institut stali imeni I. V. Stalina.

Eds.: M. A. Glinkov, Professor, Doctor of Technical Sciences, V. V. Kondakov, Professor, Doctor of Technical Sciences, V. A. Kudrin, Docent, Candidate of Technical Sciences, G. N. Oyks, Professor, Doctor of Technical Sciences, and V. I. Yavoyskiy, Professor, Doctor of Technical Sciences; Ed.: Ye. A. Borko; Ed. of Publishing House: N. D. Gromov; Tech. Ed.: A. I. Karasev.

PURPOSE: This collection of articles is intended for members of scientific institutions, faculty members of schools of higher education, engineers concerned with metallurgical processes and physical chemistry, and students specializing in these fields.

Card 1/14

APPROVED FOR RELEASE: 09/17/2001 CIA-RDP86-00513R000722820004-6"

"APPROVED FOR RELEASE: 09/17/2001 CIA-RDP86-00513R000722820004-6

85

New [Developments] in the Theory (Cont.) SOV/5556

COVERAGE: The collection contains papers reviewing the development of open-hearth steelmaking theory and practice. The papers, written by staff members of schools of higher education, scientific research institutes, and main laboratories of metallurgical plants, were presented and discussed at the Scientific Conference of Schools of Higher Education. The following topics are considered: the kinetics and mechanism of carbon oxidation; the process of slag formation in open-hearth furnaces using in the charge either ore-lime briquets or composite flux (the product of calcining the mixture of lime with bauxite); the behavior of hydrogen in the open-hearth bath; metal desulfurization processes; the control of the open-hearth thermal melting regime and its automation; heat-engineering problems in large-capacity furnaces; aerodynamic properties of fuel gases and their flow in the furnace combustion chamber; and the improvement of high-alloy steel quality through the utilization of vacuum and natural gases. The following persons took part in the discussion of the papers at the Conference: S.I. Filippov, V.A. Kudrin, M.A. Glinkov, R.P. Nam, V.I. Yavoyskiy, G.N. Oyks and Ye. V. Chelishchev (Moscow Steel Institute); Ye. A. Kazachkov and A. S. Kharitonov (Zhdanov Metallurgical Institute); N.S. Mikhaylets (Institute of Chemical Metallurgy of the Siberian Branch of the Academy of Sciences USSR); A.I. Stroganov and D. Ya. Povolotskiy (Chelyabinsk Polytechnic Institute); P.V. Umrikhin (Ural Polytechnic Institute); I.I. Fomin (the Moscow "Serp i molot" Metallurgical Plant); V.A. Fuklev (Central Asian Polytechnic Institute)

Card 2/14

APPROVED FOR RELEASE: 09/17/2001 CIA-RDP86-00513R000722820004-6"

"APPROVED FOR RELEASE: 09/17/2001 CIA-RDP86-00513R000722820004-6

and M.I. Beylinov (Night School of the Dneprodzerzhinsk Metallurgical Institute). References follow some of the articles. There are 268 references, mostly Soviet.

TABLE OF CONTENTS:

Foreword 5

Yavoyskiy, V. I. [Moskovskiy institut stali - Moscow Steel Institute]. Principal Trends in the Development of Scientific Research in Steel Manufacturing 7

Filippov, S. I. [Professor, Doctor of Technical Sciences, Moscow Steel Institute]. Regularity Patterns of the Kinetics of Carbon Oxidation in Metals With Low Carbon Content 15
[V. I. Antonenko participated in the experiments.]

Levin, S. L. [Professor, Doctor of Technical Sciences, Dnepropetrovskiy metallurgicheskiy institut - Dnepropetrovsk Metallurgical Institute].

APPROVED FOR RELEASE: 09/17/2001 CIA-RDP86-00513R000722820004-6"

"APPROVED FOR RELEASE: 09/17/2001 CIA-RDP86-00513R000722820004-6

Kondrat'yev, A.I., and V.A. Chernyakov. [Engineers, Moscow Steel Institute]. Intensification of the Steel Desulfurization Process 147

Kiselov, A.A. [Engineer, Zavod "Krasnyy Oktyabr'" - Krasnyy Oktyabr'" Plant]. Some Problems of the Slag-Formation Process in Open-Hearth Furnaces 156

Lupeyko, V.M. [Engineer], and P.V. Umrikhin [Institut metallurgii Ural'skogo filiala AN SSSR - Institute of Metallurgy of the Ural Branch of the Academy of Sciences USSR]. Intensifying Steelmaking Processes by Blowing the Powdered-Slag Formers Into the Open-Hearth Bath 161

[V.F. Isupov, I.G. Fadeyev, and others participated in the research work]

Sobolev, S.K. [Engineer], and G.N. Oyks, [Moscow Steel Institute]. Off-Furnace Desulfurization of Cast Iron by Blowing Lime and Aluminum Suspensions 173

APPROVED FOR RELEASE: 09/17/2001 CIA-RDP86-00513R000722820004-6"

"APPROVED FOR RELEASE: 09/17/2001 CIA-RDP86-00513R000722820004-6

KISEL'OV, A. P.

15

Ukrayins'kyy fizichnyy zhurnal, v. 8, no. 4, Apr 1963, 490-500.
S/135/63/[illegible]/616

A scientific conference devoted to problems of evaporation, combustion, and gas dynamics of dispersed systems was held at Odessa State University imeni I. I. Mechinikov from 1 to 6 October 1962.

Sixty-five papers were presented, 24 of which dealt with the theory and practice of production and stability of aerosols and the effect on these processes of various physicochemical factors; the other 41 were working processes in combustion chambers of various power plants. Some of the titles were "Investigating oxidation processes of high hydrogenous fuels by oxygen from compressed air," S. S. Kramarenko; "Burning of metal suspension in hydrocarbon fuels," D. I. Polishchuk, L. P. Latonina, and V. L. Yankevich; and "Experimental investigation of two-phase flow in axially-symmetrical nozzles," G. A. Komov. Included also were discussions of the methods of solving equations of dissociating gas flow in ducts and gas dynamic calculations for jet engines, G. A. Varshavskiy, E. Ya. [illegible], and A. P. Kisel'ov; the formation of plane shock waves in shock tubes and passage of shock waves through a flame front, D. V. Fedoseyev, G. D. [illegible], and I. K. Sevast'yanova; experimental results on the flow of combustion products of a methane-oxygen mixture around cambered surfaces with diffraction of detonation waves, L. G. Gvozd'ova; the stability of a steady-state flame front S. K. Aslanov; the relationship between the flame and the diameter of a burning drop, V. O. Fedoseyev; and theoretical and experimental investigation of burning of spherical metal particles, by L. A. Klyachko. [AS]

Card 2/2

APPROVED FOR RELEASE: 09/17/2001 CIA-RDP86-00513R000722820004-6"

"APPROVED FOR RELEASE: 09/17/2001 CIA-RDP86-00513R000722820004-6

KISELOV, A.S.

New transfusion methods and new blood preparations in the Leningrad Institute for Blood Transfusion. Prakt. lek., Praha 31 no. 6:132-135 20 Mar 1951. (CLML 22:3)

1. Director of the Institute--A. S. Kiselov.

APPROVED FOR RELEASE: 09/17/2001 CIA-RDP86-00513R000722820004-6"

"APPROVED FOR RELEASE: 09/17/2001 CIA-RDP86-00513R000722820004-6

KISELOV, A. S.

Present state of blood preservation in the Soviet Union. Prakt. lek., Praha 31 no. 6:137-140 20 Mar 1951. (CLML 22:3)

1. Director of the Institute--A. S. Kiselov.

APPROVED FOR RELEASE: 09/17/2001 CIA-RDP86-00513R000722820004-6"

"APPROVED FOR RELEASE: 09/17/2001 CIA-RDP86-00513R000722820004-6

KISELOV, A.S.

New transfusion methods and new blood preparations of the Leningrad Blood Transfusion Institute. Cas. lek. cesk. 90 no.12-13:399-401 30 Mar 51. (CIML 20:8)

1. Of the Leningrad Scientific-Research Institute for Blood Transfusion (Director--A.S. Kiselov).

APPROVED FOR RELEASE: 09/17/2001 CIA-RDP86-00513R000722820004-6"

"APPROVED FOR RELEASE: 09/17/2001 CIA-RDP86-00513R000722820004-6

KISELOV, A.S.

Present stage of blood preservation in the Soviet Union. Cas. lek. cesk. 90 no.14:428-432 6 Apr 51. (CIML 20:8)

1. Of the Leningrad Scientific Research Institute for Blood Transfusion Director--A.S. Kiselov.

APPROVED FOR RELEASE: 09/17/2001 CIA-RDP86-00513R000722820004-6"

"APPROVED FOR RELEASE: 09/17/2001 CIA-RDP86-00513R000722820004-6

KISEL'OV, O.V. [Kysiel'ovm O.V.]

Transparent plane table for measuring pattern areas. Lsh. prom. no.2:50-51 Ap-Je'64 (MIRA 17:7)

APPROVED FOR RELEASE: 09/17/2001 CIA-RDP86-00513R000722820004-6"

"APPROVED FOR RELEASE: 09/17/2001 CIA-RDP86-00513R000722820004-6

GUBANOV, A.; KISTAUBAYEV, K.; GROMADCHENKO, A. (stantsiya Shaktnaya); VOLOSOVICH, A., brigadir; MASLOV, T.; TEL'TSOVA, A. (g.Ivanovo); SVISTUNOV, V.; KOVALEV, V.; KISELOV, V. (g.Priozersk, Leningradskoy oblasti); ANISIMOV, P.; KUTAYTSEV, Ye.

Editor's mail. Sov.profsoiuzy 16 no.17:44-50 S '60. (MIRA 13:8)

1. Predsedatel' mestnogo komiteta upravleniya sovkhoza imeni Stalina, Krasnodarskogo kraya (for Gubanov). 2. Zaveduyushchiy avtoklubom Yuzhno-Kazakhstanskogo obkoma profsoyuza rabochikh i sluzhashchikh sel'skogo khozyaystva i zagotovok, g.Nal'chik (for Kistaubayev). 3. Chlen komiteta profsoyuza gil'zonabivnogo tsekha fabriki "Dukat," Moskva (for Volosovich). 4. Predsedatel' mestkoma passazhirskogo avtotransportnogo transporta, g. Nal'chik (for Maslov). 5. Instruktor kul'turno-massovogo otdela Leningradskogo oblsovprofa (for Svistunov). 6. Redaktor gazety "Azovstal'stroyevets," g. Zhdanov (for Kovalev). 7. Nachal'nik otdela kadrov Ul'yanovskogo sel'skokhozyaystvennogo instituta (for Kutaytsev). 8. Starshiy instruktor Tyumenskogo oblastnogo soveta profsoyuzov (for Anisimov).
(Trade unions)

APPROVED FOR RELEASE: 09/17/2001 CIA-RDP86-00513R000722820004-6"

"APPROVED FOR RELEASE: 09/17/2001 CIA-RDP86-00513R000722820004-6

KISELOV, P., inzh.

Some remarks on the last exhibition of furnitures. Durvomebel prom 5 no.3:13-15 My-Je '62.

1. Komitet po tekhnicheskiia progres.

APPROVED FOR RELEASE: 09/17/2001 CIA-RDP86-00513R000722820004-6"

"APPROVED FOR RELEASE: 09/17/2001 CIA-RDP86-00513R000722820004-6

KISELOW, A., mgr inz.

Mutual interdependence of the quality of crude oil and the dimensions of the deposits. Nafta 21 no.1:24 Ja '65.

APPROVED FOR RELEASE: 09/17/2001 CIA-RDP86-00513R000722820004-6"

"APPROVED FOR RELEASE: 09/17/2001 CIA-RDP86-00513R000722820004-6

VUKOLOV, Ye.A.; NEGOVSKIY, A.S.; ROSTOVTSEV, N.N.; KISEL'ROD, L.I.; MALYSHEV, V.I.; IORDANOVA, Z.A.; BOCHEK, F.I.

Melting of electrocorundum in a lined casing. Prom.energ. 15 no.3:18-19 Mr '60. (MIRA 13:6)
(Corundum)

APPROVED FOR RELEASE: 09/17/2001 CIA-RDP86-00513R000722820004-6"

"APPROVED FOR RELEASE: 09/17/2001 CIA-RDP86-00513R000722820004-6

KISELYUK, S.P., inzhener.

Remote control of radio reception and rediffusion centers. Vest. sviazi 16 no.1:27 Ja '56. (MLRA 9:5)
(Radio) (Remote control)

APPROVED FOR RELEASE: 09/17/2001 CIA-RDP86-00513R000722820004-6"

"APPROVED FOR RELEASE: 09/17/2001 CIA-RDP86-00513R000722820004-6

KISELYUK, S.P., inzh.

Efficient design of a reinforced concrete strut. Vest. sviazi 22 no.1:p.3 of cover Ja '62. (MIRA 14:12)
(Precast concrete construction)

APPROVED FOR RELEASE: 09/17/2001 CIA-RDP86-00513R000722820004-6"

"APPROVED FOR RELEASE: 09/17/2001 CIA-RDP86-00513R000722820004-6

L 27605-66 EWT(d) IJP(c)

ACC NR: AT6018486 SOURCE CODE: UR/2924/65/005/001/0085/0096

20
19
B+1

AUTHOR: Kiselyus, I. V.

ORG: Vilnius State University im. V. Kapsukas (Vil'nyusskiy gosudarstvennyy universitet)

TITLE: Analytic solutions of a class of linear, partial differential equations

SOURCE: Litovskiy matematicheskiy sbornik, v. 5, no. 1, 1965, 85-96

TOPIC TAGS: partial differential equation, integral function

ABSTRACT: The author proves the following

THEOREM: Given the homogeneous form $\sum_{l_1+l_2+\dots+l_m=n} F^n_{l_1 l_2 \dots l_m}(0, 0, \dots, 0)\, \eta_1^{l_1} \eta_2^{l_2} \dots \eta_m^{l_m}$

of the partial differential equations $L_m(u) = \sum_{k=0}^{n} \sum_{l_1+l_2+\dots+l_m=k} F^k_{l_1 l_2 \dots l_m}(z_1, z_2, \dots, z_m) \times$

$$\times x_1^{l_1} x_2^{l_2} \dots x_m^{l_m} \frac{\partial^{l_1+l_2+\dots+l_m} u}{\partial x_1^{l_1} \partial x_2^{l_2} \dots \partial x_m^{l_m}} = 0,$$

where $F^k_{l_1 l_2 \dots l_m}(z_1, z_2, \dots, z_m)$ are regular functions in the half cylinder $|z_1| \leq R_1, \dots, |z_m| \leq R_m$, different from zero for all non-negative $\eta_1, \eta_2, \dots, \eta_m$, with $\eta_1 + \eta_2 + \dots + \eta_m = 1$. Then there exists an infinite

Card 1/2

APPROVED FOR RELEASE: 09/17/2001 CIA-RDP86-00513R000722820004-6"

"APPROVED FOR RELEASE: 09/17/2001 CIA-RDP86-00513R000722820004-6

L 27605-66

ACC NR: AT6018486

set of linearly independent solutions of the form $u = z_1^{\lambda_1} z_2^{\lambda_2} \dots z_m^{\lambda_m} f(z_1, z_2, \dots, z_m)$, (I) where λ_j = const, $j = 1, 2, \dots, m$ and $f(z_1, z_2, \dots, z_m)$ is a regular function in the vicinity of the origin of the coordinate system. In the special case in which the functions $F^{N}_{j_1 j_2 \dots j_m}(z_1, z_2, \dots, z_m)$ = const for all subscripts $i_1, i_2, \dots, i_m$, with $i_1 + i_2 + \dots + i_m = n$, and all remaining functions $F^{k}_{i_1 i_2 \dots i_m}(z_1, z_2, \dots, z_m)$ $[k = 0, 1, \dots, n-1]$ are integral functions, the function $f(z_1, z_2, \dots, z_m)$ in (I) is an integral function. Author thanks Docent Sh. I. Strelits for his help. Orig. art. has: 17 formulas. [JPRS]

SUB CODE: 12/ SUBM DATE: 14May64/ ORIG REF: 002

Card 2/2

APPROVED FOR RELEASE: 09/17/2001 CIA-RDP86-00513R000722820004-6"

"APPROVED FOR RELEASE: 09/17/2001 CIA-RDP86-00513R000722820004-6

SOV/124-58-11-13224

Translation from: Referativnyy zhurnal, Mekhanika, 1958, Nr 11, p 192 (USSR)

AUTHOR: Kisenko, I. D.

TITLE: On Circular Diagrams for Bars Subjected to Compression-bending (O krugovykh diagrammakh dlya szhato-izognutykh sterzhney)

PERIODICAL: Nauchn. tr. Mosk. poligr. in-t, 1957, Nr 5-6, pp 135-146

ABSTRACT: An examination of the method of constructing N. G. Chentsov's circular diagrams representing the variation of the bending moments and shear forces along the span of a beam subjected to compression-bending. A detailed analysis is provided of the influence upon the structure of the diagrams exerted by discontinuities in the functions of the bending moments, shear forces, intensities of distributed loads, section stiffness, and longitudinal force. A number of generalized rules are given to enable the analyst to construct circular diagrams according to a single procedure with the use of tables which serve to simplify and monitor the process of construction.

V. M. Makushin

Card 1/1

APPROVED FOR RELEASE: 09/17/2001 CIA-RDP86-00513R000722820004-6"

"APPROVED FOR RELEASE: 09/17/2001 CIA-RDP86-00513R000722820004-6

124-58-9-10472

Translation from: Referativnyy zhurnal, Mekhanika, 1958, Nr 9, p 150 (USSR)

AUTHOR: Kisenko, I. D.

TITLE: Arc Diagrams for Beams Subjected to Compression Bending by Several Longitudinal Forces (Dugovyye diagrammy dlya szhato-izognutykh sterzhney, nagruzhennykh neskol'kimi prodol'nymi silami)

PERIODICAL: Izv. Tomskogo politekhn. in-ta, 1957, Vol 85, pp 326-332

ABSTRACT: Examination of the application of Chentsov's method to the solution of problems of longitudinal-transverse bending in a rectangular system of coordinates, wherein the vector diagrams are replaced by arc diagrams. The arc-diagram method is convenient for the calculation of beams subjected to compression bending and loaded both by several concentrated longitudinal forces and by a mixed load distribution.

1. Beams--Deformation 2. Beams--Theory

S. M. Zavartsev

Card 1/1

APPROVED FOR RELEASE: 09/17/2001 CIA-RDP86-00513R000722820004-6"

"APPROVED FOR RELEASE: 09/17/2001 CIA-RDP86-00513R000722820004-6

KISENKO, I.D., kand.tekhn.nauk, dotsent

Approximate mathematical analysis of a rotating compressed and curved bar with constant rigidity. Nauch. trudy MPI no.7/8: 93-97 '58. (MIRA 14:12)

(Elastic rods and wires)

APPROVED FOR RELEASE: 09/17/2001 CIA-RDP86-00513R000722820004-6"

"APPROVED FOR RELEASE: 09/17/2001 CIA-RDP86-00513R000722820004-6

KISENKO, M.S

KISENKO, M. S.

Sravnitel'nye resul'taty ispytaniia neskol'kikh variantov sopel. Moskva, 1940. 32 p., illus. (TSAGI. Trudy, no. 478)

Title tr.: Comparative results of investigation of several types of nozzles.

DNACA RPB (Microfilm)

SO: Aeronautical Sciences and Aviation in the Soviet Union, Library of Congress, 1955

APPROVED FOR RELEASE: 09/17/2001 CIA-RDP86-00513R000722820004-6"

"APPROVED FOR RELEASE: 09/17/2001 CIA-RDP86-00513R000722820004-6

KIRSENKO, O. V., PALLADIN, A. V., and POLYAKOVA, N. M.
(USSR)

"Enzymes from the Structures of Brain Cells."

Report presented at the 5th International Biochemistry Congress, Moscow, 10-16 Aug 1961

APPROVED FOR RELEASE: 09/17/2001 CIA-RDP86-00513R000722820004-6"

"APPROVED FOR RELEASE: 09/17/2001 CIA-RDP86-00513R000722820004-6

L 33373-66 EWT(d)/EWT(1)/EWP(1) IJP(c) GG/BB

ACC NR: AP6021475 SOURCE CODE: UR/0413/66/000/011/0099/0099

41

B

INVENTOR: Kisets, D. Kh.; Ivanov, V. I.

ORG: none

TITLE: Analog-to-digital converter. 25 Class 42, No. 182407

SOURCE: Izobreteniya, promyshlennyye obraztsy, tovarnyye znaki, no. 11, 1966, 99

TOPIC TAGS: analog digital converter , computer component

ABSTRACT: An analog-to-digital converter containing a nonlinear two-terminal network, such as a reverse-biased diode or a triode operating as a diode, with a

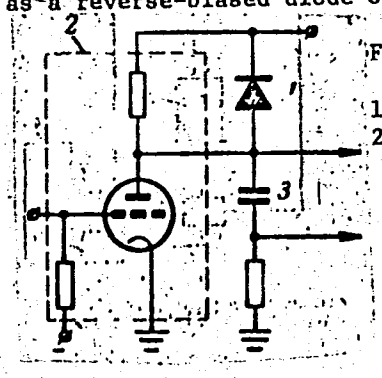

Fig. 1. Analog-to-digital converter

1 - Nonlinear two-terminal network;
2 - linear amplifier; 3 - capacitance.

Card 1/2 UDC: 681.142.07

APPROVED FOR RELEASE: 09/17/2001 CIA-RDP86-00513R000722820004-6"

"APPROVED FOR RELEASE: 09/17/2001 CIA-RDP86-00513R000722820004-6

L 33373-66

ACC NR: AP6021475

capacitive feedback is introduced (see Fig. 1.). To simplify the circuit, a linear amplifier is coupled as a load to the two-terminal network. The input of the amplifier is connected to a voltage source, while its output is connected to the common point between the capacitance and the two-terminal network. Orig. art. has: 1 figure. [JR]

SUB CODE: 09/ SUBM DATE: 16Dec64/ ATD PRESS: 5026

Card 2/2 JS

APPROVED FOR RELEASE: 09/17/2001 CIA-RDP86-00513R000722820004-6"

"APPROVED FOR RELEASE: 09/17/2001 CIA-RDP86-00513R000722820004-6

KAGANOVSKIY, A.G., doktor biol. nauk, red.; KISEVETTER, I.V., doktor tekhn. nauk, red.; LIPANOV, V.G., red.; SHESTOPALOV, P.I., red.

[Saury; its biology. Fishing techniques. Processing] Saira; biologiia. Tekhnika lova. Obrabotka. Vladivostok, 1961. 75 p. (MIRA 18:1)

1. Vladivostok. Tikhookeanskiy institut rybnogo khozyaystva i okeanografii. 2. Nachal'nik otdela dobychi Glavnogo upravleniya rybnoy promyshlennosti Dal'nego Vostoka (for Lipanov).

APPROVED FOR RELEASE: 09/17/2001 CIA-RDP86-00513R000722820004-6"

"APPROVED FOR RELEASE: 09/17/2001 CIA-RDP86-00513R000722820004-6

KISFALUDI, Erwin

Expansion of the sphere of activity and tasks of arbitration committees. Munka 4 no.2:9-12 F'54

1. Szakszervezetek Orszagos Tanacsa Munkaberosztalya alosztalyvezetoje.

APPROVED FOR RELEASE: 09/17/2001 CIA-RDP86-00513R000722820004-6"

"APPROVED FOR RELEASE: 09/17/2001 CIA-RDP86-00513R000722820004-6

LIPMUDI, I.

"Protection for Innovation Fees", P. 14, (UJITOK LAPJA, Vol. 6, No. 21, November 1954, Budapest, Hungary)

SO: Monthly List of East European Accessions (EEAL), LC, Vol. 4, No. 3, March 1955, Uncl.

APPROVED FOR RELEASE: 09/17/2001 CIA-RDP86-00513R000722820004-6"

"APPROVED FOR RELEASE: 09/17/2001 CIA-RDP86-00513R000722820004-6

L 47243-66 T/EWP(t)/ETI IJP(c) JD

ACC NR: AP6034295 SOURCE CODE: HU/0014/66/000/006/0267/0269

AUTHOR: Kisfaludy, A. (Graduate metallurgical engineer); Tardy, Pal (Graduate metallurgical engineer) 22

ORG: Research Institute for the Iron Industry (Vasipari Kutato Intezet) B

TITLE: Microscopic examination of the ferromagnetic phases of alloys 18

SOURCE: Budapest, Kohaszati Lapok, vol 99, no 6, Jun 1966, pp 267-269

TOPIC TAGS: ferromagnetic property, metallography

ABSTRACT: The method described is based on placing the metallographically polished specimen in a magnetic field and spreading a suspension containing ferromagnetic particles on the polished surface. On the effect of the magnetic excitation the suspended, dark-colored particles will leave the nonferromagnetic phases free and will concentrate on the ferromagnetic phases. Thus, the structure, based on permeability, will be highlighted. Observation may be made by a metallurgical microscope or other suitable or suitably modified viewing instrument. The techniques involved in the method were described and illustrated.

Orig. art. has: 5 figures [JPRS: 36,867]

SUB CODE: 11,20 / SUBM DATE: none / OTH REF: 001

Card 1/1 gl UDC: 669.15.74-198:620.18

APPROVED FOR RELEASE: 09/17/2001 CIA-RDP86-00513R000722820004-6"

"APPROVED FOR RELEASE: 09/17/2001 CIA-RDP86-00513R000722820004-6

KISFALUDY, J.

"Automatic filling valve without a container." Technicka Praca, Bratislava, Vol. 6, No. 1, Jan. 1954, p. 56.

SO: Eastern European Accessions List, Vol. 3, No. 11, Nov. 1954, L.C.

APPROVED FOR RELEASE: 09/17/2001 CIA-RDP86-00513R000722820004-6"

"APPROVED FOR RELEASE: 09/17/2001 CIA-RDP86-00513R000722820004-6

KISFALUDY, LAJOS

(2) CA

Chemical Abst.
Vol. 48 No. 4
Feb. 25, 1954
Analytical Chemistry

A rapid volumetric method for the determination of anthracene. Lajos Kisfaludy (Tech. Phlv., Budapest, Hung.). *Magyar Kem. Folyóirat* 58, 312-13(1952).—Expts. showed that the addn. reaction of anthracene, anhyd. maleic acid, and dioxane takes place quantitatively in 20 min. in an oil bath of 125°. This serves as the basis for the following method: add to 1 g. anthracene to 1.2 g. anhyd. maleic acid in a 200-ml. round-bottom flask, add 5 ml. dioxane, place in an oil bath at 125° and reflux for 25 min., add 100 ml. of water, cool, and titrate in the presence of phenolphthalein with 0.5*N* NaOH. The anthracene content is calcd. by the formula $((A - B) \times 1.8175/C) \times 100$ where A is the amt. of anhyd. maleic acid used, B the nonreacting portion of maleic anhydride, and C the measured quantity of anthracene sample. István Finály

APPROVED FOR RELEASE: 09/17/2001 CIA-RDP86-00513R000722820004-6"

"APPROVED FOR RELEASE: 09/17/2001 CIA-RDP86-00513R000722820004-6

KISFALUDY, L.

HUNG.

20. Synthesis of disaccharides with cation exchanging resins or free acids (In German) — G. Zemplén and L. Kisfaludy. (Acta Chimica Academiae Scientiarum Hungaricae — Vol. 4, 1951, No. 1, pp. 79–81, 2 tabs.)

The authors attempted to carry out a synthesis of disaccharides with cation exchanging resins which had been applied successfully in synthesizing simple glucosides. They found that a complex reaction product is produced when the concentrated aqueous solution of free glucose is heated in the presence of a cation exchanging resin. The acetylation of this product yielded gentiobiose octa-acetate. Similar results were obtained when an aqueous solution of glucose was heated with various low concentrations of dilute hydrochloric acid. The authors established the optimal conditions for the formation of gentobiose.

4
0
0
2MAY

APPROVED FOR RELEASE: 09/17/2001 CIA-RDP86-00513R000722820004-6"

"APPROVED FOR RELEASE: 09/17/2001 CIA-RDP86-00513R000722820004-6

KISFALUDY, Lajos (Budapest); DUALSZKY, Sandor (Budapest)

p-Chlorocarbobenzoxy-amino acids and peptides. Acta chimica Hung 24 no.3:301-307 '60. (KEAI 10:3)

1. Research Laboratory of the Kobanya Drug Factory, Budapest.
(Chlorine) (Benzyloxycarbonyl group) (Amino acids)
(Peptides) (Proline)

APPROVED FOR RELEASE: 09/17/2001 CIA-RDP86-00513R000722820004-6"

"APPROVED FOR RELEASE: 09/17/2001 CIA-RDP86-00513R000722820004-6

KISFALUDY, Lajos (Budapest)

p-Chlorocarbobenzoxy-amino acids and peptides. II. Acta chimica Hung 24 no.3:309-319 '60. (EEAI 10:3)

1. Research Laboratory of Kobanya Drug Factory, Budapest.
(Chlorine) (Benzyloxycarbonyl group) (Esters)
(Amino acids) (Peptides) (Proline) (Glutathione)

APPROVED FOR RELEASE: 09/17/2001 CIA-RDP86-00513R000722820004-6"

"APPROVED FOR RELEASE: 09/17/2001 CIA-RDP86-00513R000722820004-6

KISFALUDY, L.

3

The possibility of oxidation of cresols and aromatic amines with selenium dioxide, Géza Zemplén and Lajos Kisfaludy (Tech. Univ., Budapest, Hung.). *Chem. Ber.* 93, 1125-8(1960).—The protection of the OH group in *m*- and *p*-cresol by the $PhSO_2$ group and that of the amino group in *m*- and *p*-$MeC_6H_4NH_2$ by the phthaloyl group allowed the oxidn. of the Me group in these compds. with SeO_2 to the CHO and CO_2H groups in varying ratios. The appropriate cresol in C_5H_5N heated on the water bath with $PhSO_2Cl$ gave 74-84% *m*-$PhSO_2C_6H_4Me$ (I), m. 45-6°, *p*-$PhSO_2C_6H_4Me$ (II), m. 48-9°, and *o*-$PhSO_2C_6H_4Me$, m. 56-7°; the same compds. were also obtained in nearly 100% yields by shaking the reactants in 10% aq. alkali at room temp. I (30.0 g.) treated at 200° with stirring with 6.6 g. powd. SeO_2, the mixt. heated during 40 min. to 250°, kept 10 min. at 250°, cooled, dissolved in Et_2O, filtered from 4.4 g. Se, washed with 10% aq. $NaHCO_3$ and H_2O, and extd. with satd. aq. $NaHSO_3$, the ext. treated with satd. aq. Na_2CO_3, and the product isolated with Et_2O gave 9.4 g. *m*-$PhSO_2C_6H_4CHO$ (III), b_3 178-80°; *p*-nitrophenylhydrazone m. 185-6°; 2,4-dinitrophenylhydrazone m. 202°. The Et_2O soln. worked up gave 16.6 g. unchanged I. III (1.0 g.) and 20 cc. 10% aq. Na_2CO_3 refluxed 9 hrs., cooled, acidified with concd. HCl, and refrigerated overnight yielded 0.4 g. *m*-HOC_6H_4CHO, needles, m. 103-4°. The aq. Na_2CO_3 phase washed with Et_2O and acidified with concd. HCl yielded 3.8 g. *m*-$PhSO_2C_6H_4CO_2H$ (IV), m. 130-1°. IV (2.0 g.) and 10 cc. 10% aq. NaOH refluxed 2 hrs., cooled, acidified with concd. HCl, and filtered gave 0.90 g. *m*-$HO_2C_6H_4CO_2H$, m. 195-7°. II (30.0 g.) oxidized in the usual manner with SeO_2 and processed, and the aq. $NaHSO_3$ soln. decompd. with aq. Na_2CO_3 yielded 8.45 g. *p*-isomer (V) of III, m. 84-5°; *p*-nitrophenylhydrazone m. 172-3°; 2,4-dinitrophenylhydrazone m. 198-9°. V (1.0 g.) and 20 cc. 5% aq. Na_2CO_3 refluxed 6 hrs., cooled, and acidified with concd. HCl gave 0.35 g. *p*-HOC_6H_4CHO (VI), m. 113-14°. Crude V (0.5 g.) and 3 cc. concd. H_2SO_4 kept 1 hr. at 40°, dild. with cooling with 3 cc. H_2O, and kept overnight gave 0.12 g. VI, m. 110°. The aq. 10% Na_2CO_3 phase acidified with concd. HCl yielded 3.2 g. *p*-$PhSO_2C_6H_4CO_2H$ (VII), m. 164-5°. VII (1.1 g.) and 6 cc. 10% aq. NaOH refluxed 1 hr., cooled, and acidified with concd. HCl gave 0.52 g. *p*-$HOC_6H_4CO_2H$, m. 207-10°. *p*-$MeC_6H_4NH_2$ (25.0 g.) and 35.0 g. phthalic anhydride in 150 cc. glacial AcOH refluxed 1 hr., cooled, and filtered yielded 51 g. *N,N*-phthaloyl-*p*-toluidine (VIII), m. 200-4° or 205-6° (dioxane or PhMe). Similarly was prepd. the *m*-isomer (IX) of VIII, m. 179-80°. VIII (12.0 g.) treated at 230° during 10 min. with stirring with 5.5 g. powd. SeO_2, heated 50 min. to 250°, cooled, powdered, and digested several times with *N* NaOH, and the aq. alk. ext. acidified with concd. HCl gave 5.2 g. *N,N*-phthaloyl-*p*-aminobenzoic acid, m. 280-5° (50% aq. AcOH); the alkali-insol. residue washed with H_2O and dried gave 4.7 g. *N,N*-phthaloyl-*p*-aminobenzaldehyde. A 0.5-g. portion gave with 2,4-$(O_2N)_2C_6H_3NHNH_2$ in EtOH 0.75 g. 2,4-dinitrophenylhydrazone, m. 296-7°; *p*-nitrophenylhydrazone m. 304-5°. IX (10.0 g.) oxidized in the usual manner with 4.7 g. SeO_2 yielded 2.7 g. Se, 8.2 g. crude acid, and 1.0 g. crude aldehyde. F. W. Hoffmann

APPROVED FOR RELEASE: 09/17/2001 CIA-RDP86-00513R000722820004-6"

"APPROVED FOR RELEASE: 09/17/2001 CIA-RDP86-00513R000722820004-6

KISFALUDY, Lajos (Budapest X., Cserkesz utca 63); DUALSZKY, Sandor (Budapest X., Cserkesz utca 63); MEDZIHRADSZKY, Kalman (Budapest VIII., Muzeum korut 4/b); BAJUSZ, Sandor (Budapest VII., Rottenbiller u.26); BRUCKNER, Viktor, prof.,dr. (Budapest VIII., Muzeum korut 4/b)

Synthesis of a heptapeptide derivative for the formation of corticotropin of active polypeptides; a preliminary communciation. Acta chimica Hung 30 no.4:473-476 '62.

1. Chemische Fabrik Gedeon Richter; Institut fur Organische Chemie der Lorand Eotvos Universitat; Forschungsinstitut fur Pharmazeutische Industrie. 2. Editorial Board Member, "Acta Chimica" (for Bruckner).

APPROVED FOR RELEASE: 09/17/2001 CIA-RDP86-00513R000722820004-6"

"APPROVED FOR RELEASE: 09/17/2001 CIA-RDP86-00513R000722820004-6

BAJUSZ,Sandor(Budapest VIII.,Rottenbiller u.26); LENARD,Katalin(Budapest VIII.,Rottenbiller u.26); KISFALUDY,Lajos (Budapest X.,Cserkesz u.63); MEDZIHRADSZKY,K.; BRUCKNER,Viktor,prof.,dr. (Budapest VIII.,Muzeum korut 4/b.

Synthesis of a dodecapeptide derivative for the formation of corticotropin active polypeptides. Acta chimica Hung 30 no.2:239-243 '62

1. Forschungsinstitut fur die Pharmazeutische Industrie; Chemische Fabrik Gedeon Richter;und Institut fur Organische Chemie der L. Eotvos Universitat.
2. Editorial Board member,"Acta Chimica Academiae Scientiarum Hungaricae" (for Bruckner).

APPROVED FOR RELEASE: 09/17/2001 CIA-RDP86-00513R000722820004-6"

"APPROVED FOR RELEASE: 09/17/2001 CIA-RDP86-00513R000722820004-6

KISFALUDY, L.

Synthesis of O-glycosyltyrosine derivates and peptides. Coll Cz Chem 27 no.9:2247-2248 S '62.

1. G.Richter Pharmaceutical Plant, Budapest, Hungary.

APPROVED FOR RELEASE: 09/17/2001 CIA-RDP86-00513R000722820004-6"

"APPROVED FOR RELEASE: 09/17/2001 CIA-RDP86-00513R000722820004-6

KISFALUDY, L.; KORENSZKY, F.

Examination of synthetic hypertensins. Coll Cz Chem 27 no.9:2255-2256 S '62.

1. G.Richter Pharmaceutical Plant, Budapest, Hungary (for Kisfaludy).

APPROVED FOR RELEASE: 09/17/2001 CIA-RDP86-00513R000722820004-6"

"APPROVED FOR RELEASE: 09/17/2001 CIA-RDP86-00513R000722820004-6

KISFALUDY, L.; DUALSKY, S.

Synthesis of the heptapeptide sequence 22-28 of β-corticotropin. Coll Cz Chem 27 no.9:2258 S '62.

1. G. Richter Pharmaceutical Plant, Budapest, Hungary (for Kisfaludy).

APPROVED FOR RELEASE: 09/17/2001 CIA-RDP86-00513R000722820004-6"