"APPROVED FOR RELEASE: 06/19/2000 CIA-RDP86-00513R000824410004-8

KONSTANTINOV, A.

"The role of the brick masonry in withstanding the horizontal forces of the construction frames."

p. 12 (Stroitelstvo, Vol. 4, no. 10, 1957, Sofiia, Bulgaria.)

Monthly Index of East European Accessions (EEAI) LC, Vol. 7, No. 6, June 1958.

APPROVED FOR RELEASE: 06/19/2000 CIA-RDP86-00513R000824410004-8"

"APPROVED FOR RELEASE: 06/19/2000 CIA-RDP86-00513R000824410004-8

KONSTANTINOV, A.

The network of service enterprises is growing. Sov. profsoiuzy 17 no.8:42-43 Ap '61. (MIRA 14:3)

1. Sekretar' Moldavskogo respublikanskogo soveta profsoyuzov.
(Moldavia--Service industries)
(Trade unions)

APPROVED FOR RELEASE: 06/19/2000 CIA-RDP86-00513R000824410004-8"

"APPROVED FOR RELEASE: 06/19/2000 CIA-RDP86-00513R000824410004-8

KONSTANTINOV, A., inzh.

Repair of ships on pontoons. Mor. flot 22 no.2:35-36 F '62. (MIRA 15:4)

(Ships—Maintenance and repair)

APPROVED FOR RELEASE: 06/19/2000 CIA-RDP86-00513R000824410004-8"

"APPROVED FOR RELEASE: 06/19/2000 CIA-RDP86-00513R000824410004-8

KONSTANTINOV, A.; ALEKSANDROV, L.; KHMEL'NITSKAYA, L., red.; SINYUKHIN, V., tekhn. red.

[Guide to the exhibition of Achievements of the National Economy of the U.S.S.R.] Putevoditel' vystavki dostizhenii narodnogo khoziaistva SSSR. Moskva, Otdel informatsii i pechati VDNKh SSSR, 1962. 74 p. (MIRA 17:2)

1. Moscow. Vystavka dostizheniy narodnogo khozyaystva SSSR.

APPROVED FOR RELEASE: 06/19/2000 CIA-RDP86-00513R000824410004-8"

"APPROVED FOR RELEASE: 06/19/2000 CIA-RDP86-00513R000824410004-8

KOMISSARCHIK, M.; KONSTANTINOV, A.; BELOUSOV, B.; PROKHOROV, A.

The Third All-Union Spartakiada. Radio no.7:8 '64.

(MIRA 18:1)

1. Rukovoditel' samodeyatel'nogo radiokluba, Kalinkovichi, Gomel'skoy oblasti (for Komissarchik). 2. Vneshtatnyy korrespondent zhurnala "Radio" (for Belousov).

APPROVED FOR RELEASE: 06/19/2000 CIA-RDP86-00513R000824410004-8"

"APPROVED FOR RELEASE: 06/19/2000 CIA-RDP86-00513R000824410004-8

SAMOYLYUK, Nikolay Deomidovich; KONSTANTINOV, Arkadiy Andreyevich; FAYBISOVICH, I.L., redaktor; PROZOROVSKAYA, V.L., tekhnicheskiy redaktor; SABITOV, A., tekhnicheskiy redaktor

[Twelve-ton storage battery electric locomotive type 12 ARVI] Dvenadtsatitonnyi akkumuliatornyi selektrovoz 12 ARVI. Moskva, Ugletekhizdat, 1955. 18 p. (MIRA 9:2)
(Electric locomotives)

APPROVED FOR RELEASE: 06/19/2000 CIA-RDP86-00513R000824410004-8"

"APPROVED FOR RELEASE: 06/19/2000 CIA-RDP86-00513R000824410004-8

KONYUKH, I.V.; VINOGRADOV, G.V.; KONSTANTINOV, A.A.

Rheology of polymers; microviscosimeter for polymer melts. Plast. massy no.10:45-49 '63. (MIRA 16:10)

APPROVED FOR RELEASE: 06/19/2000 CIA-RDP86-00513R000824410004-8"

"APPROVED FOR RELEASE: 06/19/2000 CIA-RDP86-00513R000824410004-8

KONSTANTINOV, A.A.; PEREPELKIN, V.V.; SAZONOVA, T.Ye.

Determining the yield of K-fluorescence and the KX-ray self-absorption coefficient for Mg and Al. Izv. AN SSSR. Ser. fiz. 28 no.1:107-114 Ja '64. (MIRA 17:1)

APPROVED FOR RELEASE: 06/19/2000 CIA-RDP86-00513R000824410004-8"

"APPROVED FOR RELEASE: 06/19/2000 CIA-RDP86-00513R000824410004-8

CHERKAYEV, V.G., kand.tekhn.nauk; BAG, A.A., kand.tekhn.nauk; KONSTANTINOV, A.A.; BLIZNYAK, N.V.

Preparation of a copper-chromium catalyst by the thermal treatment of the copper ammonium salt of chromic acid pulverized in a gas stream. Masl.-zhir.prom. 27 no.1:27-29 Ja '61. (MIRA 14:1)

1. Vsesoyuznyy nauchno-issledovatel'skiy institut sinteticheskikh i natural'nykh dushistykh veshchestv.
(Catalysts) (Chromium) (Copper)

APPROVED FOR RELEASE: 06/19/2000 CIA-RDP86-00513R000824410004-8"

"APPROVED FOR RELEASE: 06/19/2000 CIA-RDP86-00513R000824410004-8

KONSTANTINOV, Al; IOVEV, S.; VUTKOV, L.

Contribution ot the clinical treatment and pathologic histology of the Lichen ruber planus of the salivous membrane of the mouth. Izv biol med. BAN 3 no.2:81-87 '59. (EEAI 10:4)

1. Institut po klinichna i obshtestvena meditsina.
(HISTOLOGY)
(LICHEN RUBER)
(MOUTH)

APPROVED FOR RELEASE: 06/19/2000 CIA-RDP86-00513R000824410004-8"

"APPROVED FOR RELEASE: 06/19/2000 CIA-RDP86-00513R000824410004-8

ACCESSION NR: AP4020335

S/0089/64/016/003/0253/0255

AUTHOR: Konstantinov, A. A.; Feminy*kh, V. I.; Yaritsy*na, I. A.

TITLE: Absolute measurement of neutron source yield by the manganese activation method

SOURCE: Atomnaya energiya, v. 16, no. 3, 1964, 253-255

TOPIC TAGS: neutron source yield, measurement, manganese activation method, Mn sup 56, thermal neutron, dipping counter calibration, neutron yield

ABSTRACT: The method of manganese activation for measuring absolute neutrons is used most widely in metrological institutions. This method is based on the absolute measurement of Mn^{56} activity, obtained under the influence of source neutrons placed in the center of a large tank filled with a solution of manganese sulfate. Since the thermal neutrons are absorbed by manganese, hydrogen and sulfur nuclei, the number of source emitted neutrons can be determined from the equation

$$Q=\frac{q_{Mn}\sigma_{Mn}+q_S\sigma_S+q_H\sigma_H}{q_{Mn}\sigma_{Mn}}Q_{Mn}, \quad (1)$$

Card 1/2

APPROVED FOR RELEASE: 06/19/2000 CIA-RDP86-00513R000824410004-8"

"APPROVED FOR RELEASE: 06/19/2000 CIA-RDP86-00513R000824410004-8

KRISTANOV, TSv., akad.; KONSTANTINOV, Al., kand. na med. nauki

Skin diseases in brewery workers. Izv. inst. klin. obsht. med. 4: 89-96 '60.

(OCCUPATIONAL DERMATITIS statist)

APPROVED FOR RELEASE: 06/19/2000 CIA-RDP86-00513R000824410004-8"

"APPROVED FOR RELEASE: 06/19/2000 CIA-RDP86-00513R000824410004-8

STOYANOV, S., doktor; KONSTANTINOV, A., doktor; IVANOV, I., doktor; GROZDANOV, A., doktor

Studies on dermo-hypodermatitis. Vest.derm.i ven. no.8:21-25 '61. (MIRA 15:5)

1. Iz gorodskogo kozhno-venerologicheskogo dispansera Sofii (glavnyy vrach - starshiy nauchnyy sotrudnik doktor S. Stoyanov).
(SKIN--DISEASES)

APPROVED FOR RELEASE: 06/19/2000 CIA-RDP86-00513R000824410004-8"

"APPROVED FOR RELEASE: 06/19/2000 CIA-RDP86-00513R000824410004-8

KRISTANOV, Tsv.; NACHEV, B.; KONSTANTINOV, A.; IBRISHIMOV, N.

Neurodermatitis in cows. Dermato vener Sofia 2 no.2:87-88 '63.

APPROVED FOR RELEASE: 06/19/2000 CIA-RDP86-00513R000824410004-8"

"APPROVED FOR RELEASE: 06/19/2000 CIA-RDP86-00513R000824410004-8

BALABANOV,K.; KONSTANTINOV,A.

On the vascular changes in dermohypodermitis. Nauch.tr.vissh. med. inst. Sofiia 42 no.4:7-12 '63

1. Chair of skin and veneral diseases,(Director: Prof.K.Balabanov), Medical Institute, Sofia.

APPROVED FOR RELEASE: 06/19/2000 CIA-RDP86-00513R000824410004-8

"APPROVED FOR RELEASE: 06/19/2000 CIA-RDP86-00513R000824410004-8

BELOUSOV, B.; KONSTANTINOV, A.

All-Union Spartakiada. Radio no.4:9 Ap '64. (MIRA 17:9)

1. Vneshtatnyy korrespondent zhurnala "Radio" (for Belousov).
2. Zamestitel' nachal'nika Moskovskogo gorodskogo radiokluba Vsesoyuznogo dobrovol'nogo obshchestva sodeystviya armii, aviatsii i flotu (for Konstantinov).

APPROVED FOR RELEASE: 06/19/2000 CIA-RDP86-00513R000824410004-8"

"APPROVED FOR RELEASE: 06/19/2000 CIA-RDP86-00513R000824410004-8

KONSTANTINOV, A. A.

Oct 52

USSR/Physics - Rheology

"Two-Measurement Method of Investigating the Viscous Properties of Plastic Bodies," A. A. Konstantinov and G. V. Vinogradov

DAN SSSR, Vol 86, No 4, pp 749-752

A method is proposed for measuring viscosity and the gradient of velocity simultaneously. Any method which permits finding the relationship between two varying quantities such as viscosity and temp etc as the result of a single measurement, has been named a two-measurement method by M. M. Kusakov. Hitherto there has been no two-measurement method for studying the rheological properties of plastic, disperse systems. The device proposed consists of a calibrated rod which is forced, with the aid of a calibrated spring, into a cylinder containing the material tested. A capillary provides passage for the displaced fluid. An indicator on the spring records the fluid movement on a rotating drum. The cylinder is surrounded by a constant-temp bath. Presented by Acad A. V. Topchiyev 10 Jul 52.

Source #264T99

APPROVED FOR RELEASE: 06/19/2000 CIA-RDP86-00513R000824410004-8"

"APPROVED FOR RELEASE: 06/19/2000 CIA-RDP86-00513R000824410004-8

Konstantinov, A.A.

62

Chair Phys. Chem.

Electronic investigation of molecular structure. I. A. V. Frost, P. A. Akishin, L. V. Gurvich, G. A. Kurkchi, and A. A. Konstantinov (Univ. Moscow). *Vestnik Moskov. Univ.* ~~8, No. 12, Ser. Fiz.-Mat. i Estestven. Nauk~~ No. 8, 85-95(1953).—An electron-diffraction instrument for the study of any vaporizable substance is described in which a beam of electrons of 1 mm. diam., projected from an electron gun with water-cooled anode, is focused by an electromagnetic lens and diffracted by a stream of vapor of the given substance (I) onto a photographic film. The film chamber is water-cooled for high-temp. work. The vapor stream issues from a jet assembly made of Mo glass for low temps. or metal for high temps., which consists of a nozzle connected through a tube jacketed to prevent condensation to an ampul contg. the I. The position of the nozzle is adjusted with a microscope; a well is provided for the latter. A 2nd well opposite the nozzle contains liquid N and acts as a trap for the I vapor. A sliding holder contg. a standard cryst. substance can be placed in the electron beam for calibration. This electronograph was used to det. the mol. structure of CCl_4 (II) and $CdBr_2$ (III) at temps. of 15 and 600°, resp. The intensities and radii of max. and min. in the diffraction patterns are tabulated and graphed. Av. values for the C—Cl and Cl—Cl distances in II are 1.756 ± 0.010 and 2.868 ± 0.015 A., resp.; for the Cd—Br and Br—Br distances in III they are 2.35 ± 0.03 and 4.70 ± 0.03 A., resp. The values for II and III agree within exptl. error with those of Allen and Sutton (C.A. 44, 4746c) and Lister and S. (C.A. 36, 514), resp. J. W. L., Jr.

4

APPROVED FOR RELEASE: 06/19/2000 CIA-RDP86-00513R000824410004-8"

"APPROVED FOR RELEASE: 06/19/2000 CIA-RDP86-00513R000824410004-8

SOV/124-57-7-8019

Translation from: Referativnyy zhurnal. Mekhanika, 1957, Nr 7, p 81 (USSR)

AUTHOR: Sinitsyn, V. V., Konstantinov, A. A., Vinogradov, G. V.

TITLE: The Viscosimetry of Disperse Systems at Variable Deformation Rates (Viskozimetriya dispersnykh sistem pri peremennykh skorostyakh deformatsii)

PERIODICAL: V sb.: Tr. 3-y Vses. konferentsii po kolloid. khimii. 1953 g. Moscow, AN SSSR, 1956, pp 113-120

ABSTRACT: Bibliographic entry

Card 1/1

APPROVED FOR RELEASE: 06/19/2000 CIA-RDP86-00513R000824410004-8"

"APPROVED FOR RELEASE: 06/19/2000 CIA-RDP86-00513R000824410004-8

KONSTANTINOV, A.A.

5

7

Pressure regulator for laboratory high-pressure apparatus. S. M. Loktev, A. A. Konstantinov, and [illegible] Trudy Inst. Nefti, Akad. Nauk [illegible] Two pressure regulators with [illegible] a special vessel were designed and [illegible] is intended to regulate the pressure ahead of the valve, the other the pressure behind the valve. W. M. Sternberg

4E2c(7)
2 May

1/1

JM

APPROVED FOR RELEASE: 06/19/2000 CIA-RDP86-00513R000824410004-8"

"APPROVED FOR RELEASE: 06/19/2000 CIA-RDP86-00513R000824410004-8

KONSTANTINOV, A.

RATINOV, V.; KONSTANTINOV, A.; ROZENBERG, T.; BOGAUTDINOVA, G.; STALIKOVA, G.

New device for measuring plasticity of binding materials. Stroi.mat. 3 no.2:30-31 F '57. (MLRA 10:3)
(Viscosimeter) (Binding materials)

APPROVED FOR RELEASE: 06/19/2000 CIA-RDP86-00513R000824410004-8"

"APPROVED FOR RELEASE: 06/19/2000 CIA-RDP86-00513R000824410004-8

S/183/60/000/02/14/025
B004/B005

AUTHORS: Koretskaya, A. I., Konstantinov, A. A., Vinogradov, G. V.

TITLE: An Apparatus for Determining the Viscosity of Polyamide Resin Melts

PERIODICAL: Khimicheskiye volokna, 1960, No. 2, pp. 36 - 39

TEXT: The authors describe a variation of the recording viscosimeter of the type AKV-2. Because of the high viscosity of polyamide resin melts, discharge is not through a capillary tube but through a concentric slit. The melt is pressed through the slit by means of a spring-loaded piston. To prevent oxidation, the viscosimeter is filled with nitrogen. Fig. 1 shows a diagram of the apparatus, Fig. 2 the component parts made of stainless steel, and Fig. 3 a total view. Figs. 4 and 5 show experimental results obtained with caprone resin in the form of graphs. There are 5 figures and 10 references, 5 of which are Soviet.

ASSOCIATION: VNIIV (All-Union Scientific Research Institute of Synthetic Fibers)
Koretskaya, A. I.; Institut neftekhimicheskogo sinteza AN SSSR (Institute of Petroleum-chemical Synthesis of the AS USSR)
Konstantinov, A. A., Vinogradov, G. V.

Card 1/1

APPROVED FOR RELEASE: 06/19/2000 CIA-RDP86-00513R000824410004-8"

"APPROVED FOR RELEASE: 06/19/2000 CIA-RDP86-00513R000824410004-8

ZABUGINA, M.P., KONYUKH, I.V., KONSTANTINOV, A.A.

Capillary microciscosimeter for polymer melts.

Report presented at the 13th Conference on high-molecular compounds
Moscow, 8-11 Oct 62

APPROVED FOR RELEASE: 06/19/2000 CIA-RDP86-00513R000824410004-8"

"APPROVED FOR RELEASE: 06/19/2000 CIA-RDP86-00513R000824410004-8

KONSTANTINOV, A.A., KONYUKH, I.V.

Automatic capillary viscosimeter AKB-5.

Report presented at the 13th Conference on high-molecular compounds
Moscow, 8-11 Oct 62

APPROVED FOR RELEASE: 06/19/2000 CIA-RDP86-00513R000824410004-8"

"APPROVED FOR RELEASE: 06/19/2000 CIA-RDP86-00513R000824410004-8

VINOGRADOV, G.V.; KONSTANTINOV, A.A.; PAKSHVER, E.A.; FROLOVA, A.P.

[redacted]

Study of viscose viscosity. Khim.volok. no.1:33-38 '63. (MIRA 16:2)

1. Institut neftekhimicheskogo sinteza AN SSSR (for Vinogradov, Konstantinov). 2. Vsesoyuznyy nauchno-issledovatel'skiy institut steklyanogo volokna (for Pakshver). 3. Kalininskiy kombinat iskusstvennogo volokna (for Frolova).

(Viscose) (Voscosity)

APPROVED FOR RELEASE: 06/19/2000 CIA-RDP86-00513R000824410004-8"

"APPROVED FOR RELEASE: 06/19/2000 CIA-RDP86-00513R000824410004-8

PAKSHVER, E.A.; VINOGRADOV, G.V.; KONSTANTINOV, A.A.; FROLOVA, A.P.

Varying viscosity of viscose during the process of ripening prior to formation. Khim.volok. no.1:38-41 '63. (MIRA 16:2)

1. Vsesoyuznyy nauchno-issledovatel'skiy institut steklyanogo volokna (for Pakshver). 2. Institut neftekhimicheskogo sintesa AN SSSR (for Vinogradov, Konstantinov). 3. Kalininskiy kombinat iskusstvennogo volokna (for Frolova).

(Viscose) (Viscosumetry)

APPROVED FOR RELEASE: 06/19/2000 CIA-RDP86-00513R000824410004-8"

"APPROVED FOR RELEASE: 06/19/2000 CIA-RDP86-00513R000824410004-8

VINOGRADOV, G.V.; ZABUGINA, M.P.; KONSTANTINOV, A.A.; KONYUKH, I.V.; MALKIN, A.Ya.; PROZOROVSKAYA, N.V.

Viscosity measurements of polymers in the condensed state by rotatory and capillary instruments. Vysokom.soed. 6 no.9:1646-1650 S '64. (MIRA 17:10)

1. Institut neftekhimicheskogo sinteza AN SSSR.

APPROVED FOR RELEASE: 06/19/2000 CIA-RDP86-00513R000824410004-8"

"APPROVED FOR RELEASE: 06/19/2000 CIA-RDP86-00513R000824410004-8

KUSAKOV, M.M.; KONOVALOVA, L.A.; KONSTANTINOV, A.A.

High-pressure rotary viscosimeter for small amounts of liquid. Inzh.-fiz. zhur. 7 no. 3:27-33 Mr '64. (MIRA 17:5)

1. Institut neftekhimicheskogo sinteza AN SSSR, Moskva.

APPROVED FOR RELEASE: 06/19/2000 CIA-RDP86-00513R000824410004-8"

"APPROVED FOR RELEASE: 06/19/2000 CIA-RDP86-00513R000824410004-8

ACCESSION NR: AP4020053 S/0032/64/030/003/0364/0367

AUTHORS: Vinogradov, G. V.; Belkin, I. M.; Konstantinov, A. A.; Krasheninnikov, S. K.; Rogov, B. A.; Malkin, A. Ya.; Konyukh, I. V.

TITLE: Rotational elastoviscosimeters for studying polymers

SOURCE: Zavodskaya laboratoriya, v. 30, no. 3, 1964, 364-367

TOPIC TAGS: viscosimeter, elastoviscosimeter, disk cone viscosimeter, polymer strain, polymer shear stress, viscosity measurement, viscosimeter PVR 1, viscosimeter KRPD, microviscosimeter MV 2

ABSTRACT: An elastoviscosimeter of the disk-cone type shown in Fig. 1 on the Enclosures is described. For this configuration the strain rate and shear stress are determined by the equations

$$\dot{\gamma} = \frac{\omega}{\varepsilon} \sec^{-1},$$

and

$$\tau = \frac{2}{3\pi} \frac{1 - \varepsilon^2/2}{R^3} M, \text{dynes/cm}^2;$$

Card 1/4

APPROVED FOR RELEASE: 06/19/2000 CIA-RDP86-00513R000824410004-8

ACCESSION NR: AP4020053

(where M is the applied torque). The schematic of the complete test facility is shown in Fig. 2 on the Enclosures. This apparatus permits measurements on materials with a viscosity of $10\text{-}10^{10}$ poises at temperatures of -30 to 300C in air, in vacuum ($\sim 10^{-3}$ mm Hg), or in an inert atmosphere. Through a system of gear boxes the speed can be continuously varied over a range of 10^8. The RPM is measured by a generator, and it and various temperatures (measured by thermocouples) can be continuously recorded. The applied torque on the stationary disk 3 is measured by strain gauges mounted at 45° on the cylindrical shaft 4. The results obtained with this apparatus (REV-1) were compared with measurements made in a coaxial-cylindrical viscosimeter (type PVR-1), a capillary viscosimeter (type KRPD) and in a microviscosimeter (type MV-2). The results agreed within 6% in all instances. Orig. art. has: 3 figures and 2 formulas.

ASSOCIATION: Institut neftekhimicheskovo sinteza AN SSSR (Institute of Petrochemical Synthesis AN SSSR)

SUBMITTED: 00 DATE ACQ: 27Mar64 ENCL: 02

SUB CODE: GC, IE NO REF SOV: 008 OTHER: 007

Card 2/4

ACCESSION NR: AP4020053 ENCLOSURE: 01

"APPROVED FOR RELEASE: 06/19/2000 CIA-RDP86-00513R000824410004-8

BELONOSOV, I.S.; KONSTANTINOV, A.A.

γ-Pyronecarboxylic acids and their transformations. III. Zhur. Priklad. Khim. 25, 1233-6 '52. (MLRA 5:11)
(CA 47 no.17:8744 '53)

1. Kharabovsk Med. Inst.

APPROVED FOR RELEASE: 06/19/2000 CIA-RDP86-00513R000824410004-8"

"APPROVED FOR RELEASE: 06/19/2000 CIA-RDP86-00513R000824410004-8

[illegible]

[illegible] Chinese [illegible]

[illegible]

2 hr. after the last injection the animals were decapitated and their livers were extracted for further investigation. It was found that only after three injections did the [illegible] berries increase by 14 cu. mm. the absorption of O_2 by the liver tissue, increase the dehydrase activity and decrease the amount of regenerated glutathione by 5 mg %; a single injection of the 20% decoction of Chinese schizandra [illegible] the absorption of O_2 by the liver tissue very little [illegible] change in the activity of dehydrases and the [illegible] An alcohol-aq. extract of djen-[illegible] oxidation and regeneration [illegible] An editor's note [illegible] substances, Chinese schizandra [illegible] method as stimulants are [illegible]

APPROVED FOR RELEASE: 06/19/2000 CIA-RDP86-00513R000824410004-8"

"APPROVED FOR RELEASE: 06/19/2000 CIA-RDP86-00513R000824410004-8

USSR / Pharmacology, Toxicology. Analeptics. V

Abs Jour: Ref Zhur-Biol., No 18, 1958, 85118.

Author : Konstantinov, A. A.
Inst : Not given.
Title : The Stimulating and Tonic Effects of the Chinese Lemon and of the Ginseng.

Orig Pub: Vopr. Med. Khimii, 1956, Vol 2, No 4, 287-293.

Abstract: Mice weighing 18-20 gm were given, subcutaneously, 0.1 ml of an aqueous-alcohol extract of the root of the ginseng (G) or of an extract of the seeds and berries of the lemon (L). The alcohol was removed prior to injection. G and L show a stimulating effect on respiration, and increase the consumption of oxygen and the excretion of carbon dioxide. G and L stimulate tissue respiration to a dissimilar degree, G being the more potent in this

Card 1/2

Chair of Biochem, Kharkovsk. Med Inst & Mil. Med. O.L. Acad im S. M. Kirov

13

APPROVED FOR RELEASE: 06/19/2000 CIA-RDP86-00513R000824410004-8"

"APPROVED FOR RELEASE: 06/19/2000 CIA-RDP86-00513R000824410004-8

SHAPIRO, S.Ye., VERETA, L.A., KONSTANTINOV, A.A.

Conference devoted to 20 years of studying tick-borne encephalitis in the Far East. Vop.virus. 3 no.3:188-190 My-Je '58 (MIRA 11:7)
(SOVIET FAR EAST--ENCEPHALITIS)

APPROVED FOR RELEASE: 06/19/2000 CIA-RDP86-00513R000824410004-8"

"APPROVED FOR RELEASE: 06/19/2000 CIA-RDP86-00513R000824410004-8

KONSTANTINOV, A.A.

Pathogenic role of certain metabolic disorders in Far Eastern hemorrhagic fever with renal syndrome; author's abstract. Zhur.mikrobiol.epid. i immun. 30 no.5:127 My '59. (MIRA 12:9)

1. Iz Khabarovskogo instituta epidemiologii i gigieny.
(EPIDEMIC HEMORRHAGIC FEVER, metabolism, disord. (Rus))

APPROVED FOR RELEASE: 06/19/2000 CIA-RDP86-00513R000824410004-8"

"APPROVED FOR RELEASE: 06/19/2000 CIA-RDP86-00513R000824410004-8

PIKOVETS, P.T.; KONSTANTINOV, A.A.; MAKAREVICH, N.I.; BELINSKAYA, O.I.

Protein fractions in antitoxic sera at different stages of production. Report No.1: Electrophoretic studies on serum proteins during the hyperimmunization of horses. Zhur.mikrobiol.,epid.i immun. 30 no.12:124 D '59. (MIRA 13:5)

1. Iz Khabarovskogo institut a epidemiologii i gigiyeny.
(BLOOD PROTEINS)

APPROVED FOR RELEASE: 06/19/2000 CIA-RDP86-00513R000824410004-8"

"APPROVED FOR RELEASE: 06/19/2000 CIA-RDP86-00513R000824410004-8

BELONOSOV, I.S.; KONSTANTINOV, A.A.

Biological significance of vitamin P. Report No.1: Diuresis and protein composition of the blood serum following intake of vitamin P. Biul.eksp.biol. i med. 48 no.10:44-46 O '59. (MIRA 13:2)

1. Iz kafedry biokhimii (zav. - dots. I.S. Belonosov) Meditsinskogo instituta i biokhimicheskoy laboratorii (zav. - dots. A.A. Konstantinov) Nauchno-issledovatel'skogo instituta epidemiologii i gigiyeny, Khabarovsk. Predstavlena deystvitel'nym chlenom AMN SSSR S.Ye. Severinym.

(URINATION physiol.)
(BLOOD PROTEINS pharmacol.)
(VITAMIN P pharmacol.)

APPROVED FOR RELEASE: 06/19/2000 CIA-RDP86-00513R000824410004-8"

"APPROVED FOR RELEASE: 06/19/2000 CIA-RDP86-00513R000824410004-8

KONSTANTINOV, A.A.; SHAPIRO, S.Ye.

Protein fractions of the blood serum in some infectious diseases. Vop.med.khim. 6 no.1:14-18 Ja-F '60. (MIRA 13:5)

1. Biochemical Laboratory of the Research Institute for Epidemiology and Hygiene and Chair of Infectious Diseases of the Medical Institute Habarovsk.
(PROTEINS)
(COMMUNICABLE DISEASES blood)

APPROVED FOR RELEASE: 06/19/2000 CIA-RDP86-00513R000824410004-8"

"APPROVED FOR RELEASE: 06/19/2000 CIA-RDP86-00513R000824410004-8

KONSTANTINOV, A.A.

Certain biochemical changes in the blood and urine in Far-Eastern hemorrhagic fever. Vop.med.khim. 6 no.5:484-489 S-O '60. (MIRA 14:1)

1. Biochemical Laboratory of the Research Institute for Epidemiology and Hygiene, Khabarovsk.
(EPIDEMIC HEMORRHAGIC FEVER) (BLOOD PROTEINS)

APPROVED FOR RELEASE: 06/19/2000 CIA-RDP86-00513R000824410004-8"

"APPROVED FOR RELEASE: 06/19/2000 CIA-RDP86-00513R000824410004-8

SHAPIRO, S.Ye., dotsent; KONSTANTINOV, A.A., dotsent; ZHDANOV, I.S., kand. med.nauk; ZELENSKAYA, M.I., kand.med.nauk

Data of clinical, epidemiological, and biochemical studies on hemorrhagic nephrosonephritis. Sov.med. 25 no.1:64-70 Ja '61. (MIRA 14:3)

1. Iz Khabarovskogo instituta epidemiologii i mikrobiologii (direktor A.M.Krupnikova) i kliniki infektsionnykh bolezney (zav.-dotsent S.Ye. Shapiro) Meditsinskogo instituta (direktor - prof. S.K.Nechepayev).

(EPIDEMIC HEMORRHAGIC FEVER)

APPROVED FOR RELEASE: 06/19/2000 CIA-RDP86-00513R000824410004-8"

"APPROVED FOR RELEASE: 06/19/2000 CIA-RDP86-00513R000824410004-8

KONSTANTINOV, A.A.

Some metabolic shifts in Far East hemorrhagic fever with a renal syndrome. Trudy Khab.med.inst. no.20:86-94 '60. (MIRA 15:10)

1. Iz biokhimicheskoy laboratorii (zav. dotsent A.A.Konstantinov) Khabarovskogo instituta epidemiologii i gigiyeny (dir. A.M. Krupnikova).
(HEMORRHAGIC FEVER) (KIDNEYS—DISEASES) (METABOLISM,DISORDERS OF)

APPROVED FOR RELEASE: 06/19/2000 CIA-RDP86-00513R000824410004-8"

"APPROVED FOR RELEASE: 06/19/2000 CIA-RDP86-00513R000824410004-8

KONSTANTINOV, A.A.; STAROSTINA, I.S.; SHMAKOTINA, Z.V.

Aldolase and transaminase activity of the blood serum and urine in some diseases. Vop. med. khim. 7 no.5:485-487 S-O '61; (MIRA 14:10)

1. The Chair of Biochemistry of the Medical Institute and the Biochemical Laboratory of the Research Institute for Epidemiology and Hygiene, Khabarovsk.
(ALDOLASE) (TRANSAMINASE)

APPROVED FOR RELEASE: 06/19/2000 CIA-RDP86-00513R000824410004-8"

"APPROVED FOR RELEASE: 06/19/2000 CIA-RDP86-00513R000824410004-8

SHAPIRO, S.Ye.; KONSTANTINOV, A.A.; ZELENSKAYA, M.I.; CHAPOVSKAYA, L.G.; STAROSTINA, I.S.

Clinical and immunobiochemical parallels in typhoid-paratyphoid patients. Report No. 1: Effect of the severity of the course, the type of pathogen and the age factor on the protein composition of the blood serum of typhoid-paratyphoid patients. Trudy Khab.med. inst. no.20:38-42 '60. (MIRA 15:10)

1. Iz kliniki infektsionnykh bolezney (zav. dotsent S.Ye.Shapiro) Khabarovskogo meditsinskogo instituta i biokhimicheskoy laboratorii (zav. dotsent A.A.Konstantinov) Khabarovskogo nauchno-issledovatel'-skogo instituta epidemiologii i gigiyeny (dir. A.M.Krupnikova).
(BLOOD PROTEINS) (TYPHOID FEVER) (PARATYPHOID FEVER)

[illegible] Khabarovskogo nauchno-issledovatel'-
skogo instituta epidemiologii i gigiyeny (dir. A.M.Krupnikova).
(BLOOD PROTEINS) (ANTIBIOTICS) (TYPHOID FEVER)

APPROVED FOR RELEASE: 06/19/2000 CIA-RDP86-00513R000824410004

"APPROVED FOR RELEASE: 06/19/2000 CIA-RDP86-00513R000824410004-8

β-Ray spectra of $^{[illegible]}$Mn, $^{[illegible]}$Dy, and $^{[illegible]}$Au. B. S. Dzhelepov and A. A. Konstantinov (*Compt. rend. Acad. Sci. U.R.S.S.*, 1941, 30, 701—703).—4·7 and 2·9 mg. per sq. cm. of activated MnO_2 on Al was used as source. The radiations were investigated by a magnetic spectrometer and there was good agreement between the thicknesses at >150 kv. The β spectrum obtained was analysed by the method of Kurie, Richardson, and Paxton into two components with end-points 800 and 2800 ± ~100 kv. and intensity-ratio soft : hard = 1 : 1·6. Further, 20 and 14·7 mg. per sq. cm. of Au and Dy_2O_3 respectively were used. The spectra obtained were simple, with end-points 850 ± 30 kv. and 1180 ± 40 kv. That of $^{[illegible]}$Au showed a small max. near 300 kv., probably due to the internal conversion of γ-rays.

H. V. S.-R.

APPROVED FOR RELEASE: 06/19/2000 CIA-RDP86-00513R000824410004-8"

"APPROVED FOR RELEASE: 06/19/2000 CIA-RDP86-00513R000824410004-8

β-Spectrum of radioactive tungsten. B. Dzhelepov and A. Konstantinov (*Compt. rend. Acad. Sci. U.R.S.S.*, 1941, **31**, 853-854).—To decrease the background in a counter, a special arrangement of two counters is used. The apparatus can be used to examine sources which emit as few as 5 electrons per sec. in all directions from an area of 1·5 sq. cm. It has been used to investigate the β-spectrum of radioactive W prepared by irradiation of W powder with slow neutrons. A. J. M.

APPROVED FOR RELEASE: 06/19/2000 CIA-RDP86-00513R000824410004-8"

"APPROVED FOR RELEASE: 06/19/2000 CIA-RDP86-00513R000824410004-8

KONSTANTINOV, A. [A.]

USSR/Nuclear Physics - Cosmic Radiation
Nuclear Physics - Particles, Charged - Trajectories Jul 48

"Varitrons in the Hard Component of Cosmic Rays," A. Alikhanyan, Corr Mem, Acad Sci USSR, A. Vaysenberg, M. Dayon, V. Kharitonov, A. Konstantinov, Inst of Phys Problems, Acad Sci USSR, and Phys Inst, Acad Sci, Armenian SSR, 3½ pp

"Dok Ak Nauk SSSR" Vol LXI, No 1

Previous article in "Dok Ak Nauk SSSR" Vol LX, No 9 described spectra of varitron masses obtained by examination of trajectories of particles absorbed in lead filters installed above a series of counters. Present article discusses data obtained on the spectrum of the hard component, Submitted 18 May 1948.

PA 8/49T105

APPROVED FOR RELEASE: 06/19/2000 CIA-RDP86-00513R000824410004-8"

"APPROVED FOR RELEASE: 06/19/2000 CIA-RDP86-00513R000824410004-8

KONSTANTINOV, A. A.

USSR/Nuclear Physics - Cosmic Rays Varitrons Oct 49

"Existence of Light Varitrons," A. I. Alikhanyan, A. A. Konstantinov, V. M. Kharitonov, M. I. Dayon, Phys Inst, Acad Sci Armenian SSR, Inst Phys Problem Acad Sci USSR, 11 pp

"Zhur Eksper i Teoret Fiz" Vol XIX, No 10

Studied pulse (momentum) spectrum of cosmic particles in the interval 30-80 MeV/c. Showed that particles exist in this pulse (momentum) interval which have masses of 150, 100, 80, and, apparently, 50 times the electron mass. Submitted 28 Jun 49.

PA 150T59

APPROVED FOR RELEASE: 06/19/2000 CIA-RDP86-00513R000824410004-8"

"APPROVED FOR RELEASE: 06/19/2000 CIA-RDP86-00513R000824410004-8

KONSTANTINOV A.A.

USSR/Nuclear Physics - Instruments and Installations. Methods of Measurement and Investigation

C-2

Abst Journal : Referat Zhur - Fizika, No 12, 1956, 33875

Author : Aglintsev, K. K., Karavayev, F. M., Konstantinov, A. A., Ostromukhova, C. P., and Khol'nova, Ye. A.

Institution : None

Title : Standardization of radioactive compounds

Original Periodical : Atomnaya Energiya, 1956, No 2, 55-62

Abstract : Description of methods and apparatus used in the All-Union Scientific-Research Institute of Metrology imeni D. I. Mendeleyev for precise measurements of many dosimetric characteristics of radioactive compounds: activity (calorimetric and ionization methods and the method of the absolute β count), γ-equivalent (ionization chamber with a solid angle of 4π) and the intensity of the dose of λ-radiation (normal ionization chamber). The measurement limits and accuracies of the results are indicated.

Card 1/1

APPROVED FOR RELEASE: 06/19/2000 CIA-RDP86-00513R000824410004-8"

"APPROVED FOR RELEASE: 06/19/2000 CIA-RDP86-00513R000824410004-8

KONSTANTINOV, A. A.

6
1-RMF

Standardization of radioactive preparations. K. K. Aglintsev, F. M. Karavaev, A. A. Konstantinov, G. P. Ostromukhova, and E. A. Khoinova. Atomic Energy (U.S.S.R.) (English translation [illegible] Energy 3, 347-66(1966)).—Description of various standardization methods used. James L. Lauer

RMF

APPROVED FOR RELEASE: 06/19/2000 CIA-RDP86-00513R000824410004-8"

"APPROVED FOR RELEASE: 06/19/2000 CIA-RDP86-00513R000824410004-8

Konstantinov, A.A.

Category : USSR/Nuclear Physics - Instruments and Installations, Methods of Measurement and Investigation. C-2

Abs Jour : Ref Zhur - Fizika, No 3, 1957, No 5782

Author : Konstantinov, A.A., Sumbayev, O.I., Chekin, V.V.
Inst : All-Union Scientific Research Institute for Metrology.
Title : Concerning Tests and Operating Modes of a Luminescent Gamma Spectrometer.

Orig Pub : Izv. AN SSSR, ser. fiz., 1956, 20, No 3, 347

Abstract : The average effectiveness of electron collection from the cathode of the FEU-19 photomultiplier is increased by approximately a factor of two by using a non-uniform voltage divider (in particular, one should have U_{1-2}: $U_{2-3} \approx 1:4$). The photomultipliers were tested with short illumination pulses from a Kerr cell. Using a CsI (Tl) crystal, the resolving power ($h\nu \approx 1$ Mev), obtained for ten out of the one hundred tested photoelectronic multipliers with non-uniform divider was better than 10% (if the potential distribution is uniform, the resolution obtained in all cases was worse than 15%).

Card : 1/1

21(3) SOV/112-59-3-525

Translation from: Referativnyy zhurnal. Elektrotekhnika, 1959, Nr 3, p 135 (USSR)

AUTHOR: Aglintsev, K. K., Balon, Z. P., Dzhelepov, B. S., Karavayev, F. M., Karamyan, A. S., Konstantinov, A. A., Ostromukhova, G. P., Prokofyev, P. T., Rusinova, S. A., Sumbayev, O. I., Khol'nova, Ye. Shestopalova, S. A., Yudin, M. F., and Yaritsyna, I. A.

TITLE: Metrology of Penetrating Radiations (Metrologiya pronikayushchikh izlucheniy)

PERIODICAL: V sb.: Atomn. energiya v mirnykh tselyakh. Gosenergoizdat, 1957, pp 145-181

ABSTRACT: Projects are described of the Vsesoyuznyy nauchno-issledovatel'skiy institut metrologii (All-Union Scientific-Research Metrology Institute) imeni D. I. Mendeleyev on standardisation of measures in the ionizing-radiation field, and on the construction of standard and reference outfits for reproducing the fundamental units in the whole range of energies and intensities of radiations of all types. The following outfits are described: (1) a standard reproducing

Card 1/3

Metrology of Penetrating Radiations

the roentgen in the range of 40-300 Kev; (2) a reference outfit for measuring in roentgens of electromagnetic-radiation doses having the quantum energy 300-1,500 Kev; (3) an outfit for measuring in roentgens the electromagnetic-radiation doses with quantum energy of 3-20 Kev with an error of 1%; (4) standard outfits for measuring radium gamma-equivalents; (5) differential lead-ball gamma-calorimeters for measuring the activity of various preparations on the basis of their gamma radiation; (6) an isothermal calorimeter operating on the principle of liquid-nitrogen evaporation for measuring the activity of beta preparations; (7) a differential alpha-calorimeter for measuring the activity of radium preparations. An activity-measurement method by counting the number of particles emitted by a preparation is being developed in two directions: counting of particles in a definite solid angle and the same in the total solid angle by means of "4π"-counters." The beta-particle counter within a definite angle permits measuring preparations with an activity of 10^{-8}-10^{-5} curie with an error of 4-6%. Two alternate designs of "4π"-

Card 2/3

SOV/112-59-3-525

Metrology of Penetrating Radiations

counters" are described. One of them permits measuring beta preparations with an activity of 10^{-10}-5×10^{-5} curie with an error of 2-4%, and the second, 5×10^{-11}-5×10^{-7} curie with an error of 1-3%. The outfits have been built for measuring neutron streams from 10^{8} down to a few tens of neutrons per [illegible]. A gamma-spectrometer "Elotron" with an improved focusing has been built for investigation of gamma spectra in the energy range of 600-3,000 Kev. The conduct investigations in the range of 120-1,300 Kev, a 2-meter long crystal-diffraction gamma-spectrometer of the Dumond spectrometer type has been built. Also, a magnetic spectrometer analyzing photoelectrons has been built for the range of 200-700 Kev. Measuring the half-life from a few hours to a few years is made by two methods: the method of successive measurements of gamma-equivalent preparations and the differential-chamber method. The results of half-life measurements for a number of isotopes are tabulated.

N.G.Z.

Card 3/3

APPROVED FOR RELEASE: 06/19/2000 CIA-RDP86-00513R000824410004-8

"APPROVED FOR RELEASE: 06/19/2000 CIA-RDP86-00513R000824410004-8

86122

S/112/59/000/012/050/097
A052/A001

21.5300

Translation from: Referativnyy zhurnal, Elektrotekhnika, 1959, No. 12, p. 149, # 24936

AUTHOR: Konstantinov, A.A.

TITLE: Absolute Counting of β-Particles. (The Method of the Absolute Solid Angle and the "4π-Counter" Method)

PERIODICAL: Tr. Vses. n.-i. in-ta metrol., 1957, No. 30 (90), pp. 9-17

TEXT: The installation for the absolute counting of β-particles by the method of the absolute solid angle represents a brass box aluminum-coated from inside. The detector, a cylindrical counter, has on its side surface a window closed with a thin (0.04 mg/cm^2) collodion film. The source 0.1 mg/cm^2 thick is applied to the collodion film. The box is filled with helium (with an addition of ethyl alcohol vapors) under pressure of 17-20 mm Hg. In the "4π-counter" method two types of installations are used. In the first type the "4π-counter" consists of two cylindrical counters 40 mm in diameter and 80 mm long with the source placed between them. The second-type represents two semicylinders 80 mm

Card 1/2

APPROVED FOR RELEASE: 06/19/2000 CIA-RDP86-00513R000824410004-8"

"APPROVED FOR RELEASE: 06/19/2000 CIA-RDP86-00513R000824410004-8

SUMBAYEV, O.I.; KONSTANTINOV, A.A.

Scintillation γ-spectrometer containing FEU-19 type photoelectric multiplier and CsI(Tl) crystal. Trudy VNIIM no.30: 117-131 '57. (MIRA 12:1)
(Scintillation spectrometry) (Gamma rays)
(Photoelectric multipliers)

APPROVED FOR RELEASE: 06/19/2000 CIA-RDP86-00513R000824410004-8"

"APPROVED FOR RELEASE: 06/19/2000 CIA-RDP86-00513R000824410004-8

KONSTANTINOV, A.A.

Accuracy of measurement using self-quenched counters. Trudy VNIIM no.30:143-148 '57. (MIRA 12:1)
(Geiger-Müler counters)

APPROVED FOR RELEASE: 06/19/2000 CIA-RDP86-00513R000824410004-8"

"APPROVED FOR RELEASE: 06/19/2000 CIA-RDP86-00513R000824410004-8

KONSTANTINOV, A.A., KARAVAYEV, F.M., AGLINTSEV, K.K., [illegible]LON, E.P., OSTROMUKHOVA, G.P., KHOL'NOYA, Ye.A., Leningrad

"Standardizing X-Rays and nuclear radiation" (Section X)

report submitted for Measurement and Automation, Scientific Society for (Hungarian) Intl Measurements Conference - Budapest, Hungary, 24-30 Nov 58

APPROVED FOR RELEASE: 06/19/2000 CIA-RDP86-00513R000824410004-8"

"APPROVED FOR RELEASE: 06/19/2000 CIA-RDP86-00513R000824410004-8

KONSTANTINOV, A.A.

S/123/60/000/009/014/017
A004/A001

Translation from: Referativnyy zhurnal. Mashinostroyeniye, 1960, No. 9, p. 258, # 45141

AUTHORS: Aglintsev, K.K., Karavayev, F.M., Karamyan, A.S., Konstantinov, A.A., Ostromukhova, G.P., Khol'nova, Ye.A., Yudin, M.F., Yaritsyna, I.A.

TITLE: Achievements and Development Prospects of the Metrology of Ionizing Radiation

PERIODICAL: Tr. Vses. n.-i. in-ta metrol., 1958, No. 33 (93), pp. 135-158

TEXT: The authors investigate the work which was carried out up to 1958 at the VNIIM, ensuring the unity of measures and devices in the field of ionizing measurements. Checking systems for the measurement of activity of radioactive preparations (the method of absolute counting of the number of charged particles and photons, emitted by the preparation, the ionizing chamber method and the calorimetric method) and also for the measurement of γ-equivalents are presented. The authors describe the methods of absolute measurements of neutron fluxes which can be put at the basis of the calibrating method. They enumerate

Card 1/2

APPROVED FOR RELEASE: 06/19/2000 CIA-RDP86-00513R000824410004-8"

"APPROVED FOR RELEASE: 06/19/2000 CIA-RDP86-00513R000824410004-8

SOV/120-59-1-16/50

AUTHOR: Konstantinov, A. A.

TITLE: Measurement of the Activity of Specimens which Disintegrate by Electron Capture (Izmereniye aktivnosti preparatov, raspadayushchikhsya putem elektronnogo zakhvata)

PERIODICAL: Pribory i tekhnika eksperimenta, 1959, Nr 1, pp 67-69 (USSR)

ABSTRACT: The activity of the specimen is measured by means of a 4π counter. The activity is determined from the number of characteristic X-ray quanta emitted by the daughter element of the specimen. The counter is shown in Fig 1 and is used in the proportional region. The specimen is introduced into it on a thin aluminium foil and the count rate is measured for two different fillings. The first of these is methane and the second methane with an addition of xenon or some other heavy gas. In the case of the first filling the counts are due to Auger electrons and radiation which accompany the disintegration (conversion electrons, etc) and in the case of the second, the counter counts Auger electrons and the accompanying radiation and also the absorption in xenon of

Card 1/2

APPROVED FOR RELEASE: 06/19/2000 CIA-RDP86-00513R000824410004-8"

"APPROVED FOR RELEASE: 06/19/2000 CIA-RDP86-00513R000824410004-8

SOV/120-59-1-16/50

Measurement of the Activity of Specimens which Disintegrate by Electron Capture

X-rays due to the daughter element in the specimen. The difference in the count rate gives the number of quanta of characteristic X-ray radiation of the daughter element which are absorbed in the given quantity of xenon. The method is very sensitive and activities between 5×10^{-10} and 10^{-6} curie may be measured with an accuracy of 6-8% for thin specimens. There are no tables, 1 figure and 4 references, of which 1 is Soviet, 1 Swedish and 2 are English.

ASSOCIATION: Vsesoyuznyy nauchno-issledovatel'skiy institut metrologii (All-Union Scientific Research Institute for Metrology)

SUBMITTED: January 21, 1958.

Card 2/2

APPROVED FOR RELEASE: 06/19/2000 CIA-RDP86-00513R000824410004-8"

"APPROVED FOR RELEASE: 06/19/2000 CIA-RDP86-00513R000824410004-8

S/048/60/024/012/008/011
B019/B056

AUTHORS: Konstantinov, A. A., Sazonova, T. Ye., and Perepelkin, V. V.

TITLE: Determination of the Fluorescence Coefficients of the L-X Radiation of Ga^{71}, Cu^{65}, and V^{51}

PERIODICAL: Izvestiya Akademii nauk SSSR. Seriya fizicheskaya, 1960, Vol. 24, No. 12, pp. 1480-1483

TEXT: The present paper was read at the 10th All-Union Conference on Nuclear Spectroscopy, which was held in Moscow from January 19 to January 27, 1960. The fluorescence coefficient of the L-X radiation or the ratio between the L-X quanta and the number of vacant places in the L-shell was experimentally determined for Z = 36 and Z > 40. For a number of important physical questions, a knowledge of the fluorescence coefficient of the L-X radiation for Z < 36 is necessary. For measuring the quanta, the authors used a 4π-proportional counter and determined the vacancies of the L-shell from the activity of electron-capturing preparations. For the purpose of determining the total number of L-X quanta, which are emitted by the source under the solid angle 2π, it was necessary to determine the

Card 1/4

APPROVED FOR RELEASE: 06/19/2000 CIA-RDP86-00513R000824410004-8"

"APPROVED FOR RELEASE: 06/19/2000 CIA-RDP86-00513R000824410004-8

Determination of the Fluorescence Coefficients of the L-X Radiation of Ga^{71}, Cu^{65}, and V^{51}

S/048/60/024/012/008/011
B019/B056

absorption of these quanta in a celluloid film. The 4π-counter is schematically shown in Fig. 1. The fluorescence coefficients determined herewith are given in Table 1. There are 5 figures, 1 table, and 8 references: 1 Soviet, 4 US, 1 French, and 1 Canadian.

ASSOCIATION: Vsesoyuznyy nauchno-issledovatel'skiy institut metrologii im. D. I. Mendeleyeva (All-Union Scientific Research Institute of Metrology imeni D. I. Mendeleyev)

Text to Fig. 1: 1) Al foil frame. 2) Polystyrene introduction. 3) Counter body. 4) Source. 5) Counter thread. 6) Support. 7) Copper ground plate. 8) Faucet.

Text to Table 1: 1) Isotope. 2) Number of L-X quanta passing through the first celluloid film. 3) Number of L-X quanta passing through the second celluloid film. 4) Total number of L-X quanta emitted through the angle 4π. 5) Activity of the source. 6) Number of vacancies of the L-shell. 7) ω_L in %.

Card 2/4

APPROVED FOR RELEASE: 06/19/2000 CIA-RDP86-00513R000824410004-8"

"APPROVED FOR RELEASE: 06/19/2000 CIA-RDP86-00513R000824410004-8

S/048/60/024/012/008/011
B019/B056

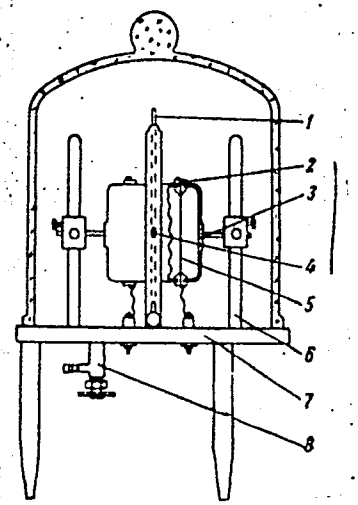

Card 3/4

APPROVED FOR RELEASE: 06/19/2000 CIA-RDP86-00513R000824410004-8"

"APPROVED FOR RELEASE: 06/19/2000 CIA-RDP86-00513R000824410004-8

S/048/60/024/012/008/011
B019/B056

Коэффициенты флуоресценции L-X-лучей Ga^{71}, Cu^{65} и V^{51}

1 Изотоп	2 N_1	3 N_2	4 N_0	5 Активность источника, Cu	6 Число вакансий в L-оболочке	7 ω_{L_1} %
*Ga^{71}	26 500	18 100	75 800	$4 \cdot 10^{-6}$	$112 \cdot 10^5$	0,68
**Ga^{71}	16 400	11 800	40 700	$2,4 \cdot 10^{-6}$	$68 \cdot 10^5$	0,60
Cu^{65}	72 000	28 700	227 000	$1,4 \cdot 10^{-5}$	$10 \cdot 10^5$	0,56
*V^{51}	5 950	3 000	20 200	$2,5 \cdot 10^{-6}$	$93 \cdot 10^5$	0,22
**V^{51}	9 400	—	33 500	$3,6 \cdot 10^{-6}$	$135 \cdot 10^5$	0,25

Card 4/4

APPROVED FOR RELEASE: 06/19/2000 CIA-RDP86-00513R000824410004-8"

"APPROVED FOR RELEASE: 06/19/2000 CIA-RDP86-00513R000824410004-8

89252

S/048/61/025/001/018/031
B029/B060

24.6720

AUTHORS: Konstantinov, A. A. and Perepelkin, V. V.

TITLE: Determination of the ratio of probabilities of the capture of L and K shells in the decay of Cr^{51}, Zn^{65}, and Ge^{71}

PERIODICAL: Izvestiya Akademii nauk SSSR. Seriya fizicheskaya, v. 25, no. 1, 1961, 106-108

TEXT: The authors determined the ratios λ_L/λ_K for the decay of Cr^{51}, Zn^{65}, and Ge^{71} by means of a 4π proportional counter using coincidences between the KX quanta and the Auger L electrons (transitions L-MM, etc.). This was done in view of the fact that it is necessary to know the ratio λ_L/λ_K when determining the radioactivity of electron capture preparations, and also in view of the determination of the decay scheme. If the 4π counter is filled with a methane mixture (20 mm Hg) and xenon (15 mm Hg), the first half of the 4π counter or the first 2π counter (toward which the source is oriented) will record the Auger L electrons (first peak) and the

Card 1/5

APPROVED FOR RELEASE: 06/19/2000 CIA-RDP86-00513R000824410004-8"

"APPROVED FOR RELEASE: 06/19/2000 CIA-RDP86-00513R000824410004-8

K Auger electrons together with the KX quanta absorbed in the xenon of the 2π counter (second peak). Between these two peaks, there is a certain number of Auger K electrons which lose part of their energy during reflection from the base. The second half of the 4π counter records the KX quanta only (Fig. 2). The number N^{XL} of coincidences between the Auger L electrons of the first half of counter and the KX quanta of the second half as well as the number N^X of KX quanta and also the number N^L of Auger L electrons are expressed by the following formulas:

$N^{XL} = \varepsilon^X \varepsilon^L k_1 N_0^X k_2$; $N^X = \varepsilon^X N_0^X$; $N^L = \varepsilon^L k_1 N_1^L$, where the coefficient ε^X takes account of the efficiency of recording of the KX quanta of the second half of counter and the corresponding solid angle. The coefficient k_1 is dependent upon the size of the slit of the single-channel differential pulse height analyzer, by which the peak of Auger L electrons is cut off from the total Auger spectrum. N_0^X is the total number of KX quanta emitted by the source into the solid angle 4π. The coefficient k_2 takes account of the fact that not all of the KX quanta yield coincidences with the Auger L electrons. N_1^L is the total number of

APPROVED FOR RELEASE: 06/19/2000 CIA-RDP86-00513R000824410004-8"

"APPROVED FOR RELEASE: 06/19/2000 CIA-RDP86-00513R000824410004-8

the Auger L electrons emitted by the source, with the exception of such as yield coincidences with the Auger K electrons and KX quanta recorded by the first half of the 4π counter. The relation $N_1^L = N^L k_3 N^X k_2 / N^{XL}$ follows from the above mentioned expressions for N^{XL}, N^X, N^L, with the coefficient k_3 taking account of the contribution of Auger K electrons to the peak of Auger L electrons. N_1^L may be represented also as $N_1^L = n_o^L + k_2 N_1^X + k_4 N_1^K$, where n_o^L is the total number of the Auger L electrons emitted as a result of the L capture; $k_2 N_1^X$ is the number of the Auger L electrons accompanying the quanta which are not recorded by the first half of the 4π counter; $k_4 N_1^K$ is the number of the Auger L electrons accompanying the Auger K electrons which are not recorded by the 4π counter. The coefficient k_4 indicates the ratio in which the Auger L electrons accompany the Auger K electrons. N_1^X and N_1^K should be as small as possible to allow the most accurate

APPROVED FOR RELEASE: 06/19/2000 CIA-RDP86-00513R000824410004-8"

"APPROVED FOR RELEASE: 06/19/2000 CIA-RDP86-00513R000824410004-8

determination of n_o^L. This is obtained for N_1^X by the largest possible efficiency of KX quanta counting, and for N_1^K by applying radioactive isotopes onto the celluloid film with a bismuth layer.
$\lambda_L/\lambda_K = n_o^L 1 (N_o^X + N_o^K)$. By the method described, one obtains for the ratio of probabilities λ_L/λ_K for Cr^{51}, Zn^{65}, and Ge^{71}:

Radioactive isotopes	Our results	Other results	Calculated in Ref. 1	Calculated in Ref. 2
Cr^{51}	0.10±0.02	-	0.088	0.094
Zn^{65}	0.13±0.02	-	0.096	0.099
Ge^{71}	0.13±0.02	0.25 [7]; 0.128 [8]; 0.09 [9]	0.106	0.11

The article under consideration is the reproduction of a lecture delivered at the 10th All-Union Conference on Nuclear Spectroscopy, which took place

APPROVED FOR RELEASE: 06/19/2000 CIA-RDP86-00513R000824410004-8"

"APPROVED FOR RELEASE: 06/19/2000 CIA-RDP86-00513R000824410004-8

in Moscow from January 19 to 27, 1960. There are 3 figures, 1 table, and 10 references: 3 Soviet-bloc and 7 non-Soviet-bloc.

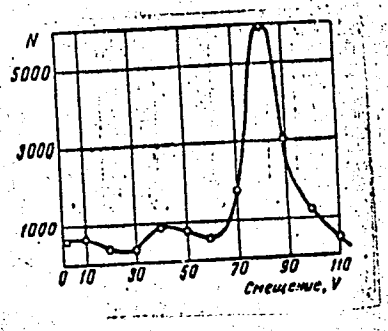

Fig. 2

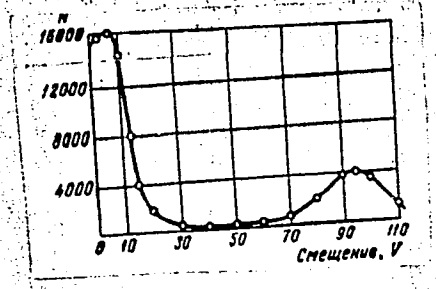

Fig. 3

APPROVED FOR RELEASE: 06/19/2000 CIA-RDP86-00513R000824410004-8"

"APPROVED FOR RELEASE: 06/19/2000 CIA-RDP86-00513R000824410004-8

S/048/61/025/002/006/016
B117/B212

AUTHORS: Konstantinov, A. A., Sokolova, I. A., Sazonova, T. Ye.

TITLE: Determining the fluorescence coefficient of KX-rays of V^{51}, Mn^{55}, Cu^{65}, and Ga^{71}

PERIODICAL: Izvestiya Akademii nauk SSSR. Seriya fizicheskaya, v. 25, no. 2, 1961, 228-232

TEXT: The present paper has been read at the 10th All-Union Conference on Nuclear Spectroscopy and at the 11th Annual Conference on Nuclear Spectroscopy (Riga, January 25 to February 2, 1961). The data on the fluorescence coefficient of KX-rays of $Mn^{55}(Fe^{55})$ have been obtained after the 10th All-Union Conference. To determine the fluorescence coefficient of KX-rays the authors have applied the method of absolute counting of Auger K-electrons and KX-quanta of the radiation source in question. Counting was made by means of a 4π proportional counter. The thin foil to which the radiation source was applied, was made of perchlorovinyl coated with aluminum. Foil and coating had a thickness of together 0.07-0.09 μ. The emitters

Card 1/4

APPROVED FOR RELEASE: 06/19/2000 CIA-RDP86-00513R000824410004-8"

"APPROVED FOR RELEASE: 06/19/2000 CIA-RDP86-00513R000824410004-8

have been applied to the foil by vacuum evaporation of radioactive Cr^{51}, Fe^{55}, Zn^{65}, and Ge^{71} isotopes. The perchlorovinyl foil had been inserted in the 4π counter (Fig. 1) which consisted of two 2π counters. The 4π counter had been filled with methane (20 mm Hg). At such a pressure, practically only Auger electrons are recorded by the counter. The energy distribution of the Ga^{71} Auger-electron spectra which has been obtained from the side facing the radiation source and from both sides combined, exhibit two peaks of the Auger L-K-electrons. A certain number of K-electrons are preserved between those two peaks. These electrons have lost part of their energy inside the source and during reflections of the foil and of the gas filling the counter. The energy distribution of the Auger electrons in the second part of the 4π counter has one peak, only for the K-electrons since the L-electrons are completely absorbed by the foil. The actual absorption factor of Auger K-electrons for the isotopes examined is 4-15% for a 0.07÷0.09 μ (8÷10 μg cm^{-2}) thick perchlorovinyl foil. The self-absorption factor of Auger K-electrons can be calculated from the actual absorption factor. If a 0.07-0.09 μ thick foil is absorbing 4÷15% then the active

APPROVED FOR RELEASE: 06/19/2000 CIA-RDP86-00513R000824410004-8"

"APPROVED FOR RELEASE: 06/19/2000 CIA-RDP86-00513R000824410004-8

layer with a surface density of 10^{-8} g cm^{-2} will absorb less than 1%. The fluorescence coefficient of KX-rays is determined by the formula $\omega_K = N_o^x/N_o^x + N_o$ (19). Here, N_o^x is the total number of KX-quanta, N_o is the total number of Auger electrons. By using this formula the fluorescence coefficients have been calculated for $V^{51}(Cr^{51})$, $Mn^{55}(Fe^{55})$, $Cu^{65}(Zn^{65})$, and $Ga^{71}(Ge^{71})$.(Table). There are 4 figures, 1 table, and 5 references: 1 Soviet-bloc.

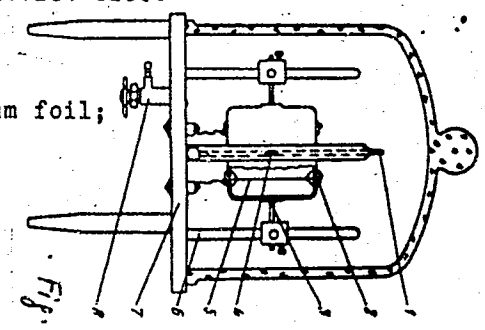

Legend to Figure 1: 1) Frame with aluminum foil; 2) polystyrene pipes; 3) counter housing; 4) source; 5) filament of the counter; 6) holder; 7) brass table; 8) cock.

Card 3/4

APPROVED FOR RELEASE: 06/19/2000 CIA-RDP86-00513R000824410004-8"

"APPROVED FOR RELEASE: 06/19/2000 CIA-RDP86-00513R000824410004-8

ALEKSEYEV, V.Ya.; KONSTANTINOV, A.A.

USCh-1 plant for absolute activity measurements of alpha emitters. Trudy inst. Kom. stand., mer i izm. prib. no.69: 5-12 '62. (MIRA 17:8)

1. Vsesoyuznyy nauchno-issledovatel'skiy institut metrologii im. Mendeleyeva.

APPROVED FOR RELEASE: 06/19/2000 CIA-RDP86-00513R000824410004-8"

"APPROVED FOR RELEASE: 06/19/2000 CIA-RDP86-00513R000824410004-8

KONSTANTINOV, A.A.; KOCHIN, A.Ye.

USCh-2 plant for absolute activity measurements of beta emitters. Trudy inst. Kom. stand., mer i izm. prib. no.69: 13-22 '62. (MIRA 17:8)

1. Vsesoyuznyy nauchno-issledovatel'skiy institut metrologii im. Mendeleyeva.

APPROVED FOR RELEASE: 06/19/2000 CIA-RDP86-00513R000824410004-8"

"APPROVED FOR RELEASE: 06/19/2000 CIA-RDP86-00513R000824410004-8

ALEKSEYEV, V.Ya.; KONSTANTINOV, A.A.; PEREPELKIN, V.V.; SOKOLOVA, I.A.; TRISHIN, N.V.

Apparatus for measuring external alpha and beta emissions and the relative nonuniformity of the distribution of activity over the surfaces of large distributed alpha and beta emitters. Trudy inst. Kom. stand., mer i izm. prib. no.69:23-41 '62. (MIRA 17:8)

1. Vsesoyuznyy nauchno-issledovatel'skiy institut metrologii im. Mendeleyeva.

APPROVED FOR RELEASE: 06/19/2000 CIA-RDP86-00513R000824410004

KONSTANTINOV, A.A.; KOCHIN, A.Ye.; [illegible], V.

Standard unit USCh-5. Nov. nauch.-issl. rab. po metr. VNIIM no.2:4-7 '64. (MIRA 18:4)

"APPROVED FOR RELEASE: 06/19/2000 CIA-RDP86-00513R000824410004-8

KONSTANTINOV, A.A.; PEREPELKIN, V.V.

Relation between the activity and external radiation of extended Sr^{90} and Y^{90} β-emitters. Nov. nauch.-issl. rab. po metr. VNIIM no.2:8-11 '64. (MIRA 18:4)

APPROVED FOR RELEASE: 06/19/2000 CIA-RDP86-00513R000824410004-8"

"APPROVED FOR RELEASE: 06/19/2000 CIA-RDP86-00513R000824410004-8

L 25386-65 EWT(m)/T IJP(c)

ACCESSION NR: AP5002152 S/0120/64/000/006/0069/0072

AUTHOR: Konstantinov, A. A.; Perepelkin, V. V.

TITLE: Determination of the self-absorption of Co^{60} beta particles in activity measurements by a proportional 4pi-counter

SOURCE: Pribory i tekhnika eksperimenta, no. 6, 1964, 69-72

TOPIC TAGS: beta particle selfabsorption, radioactivity measurement

ABSTRACT: The self-absorption (SA) of Co^{60} β-particles in sources prepared from a drop of $CoCl_2$ solution on a thin film is determined by comparing the β- and γ-radiations of these sources with like radiations of "reference" sources which are practically free from SA. The reference sources were prepared by vacuum-vaporization of metallic radioactive Co onto thin films. It was found that SA increases with an increase in size of the crystals of the source. By combining the method of absolute count of β-particles with the method of relative

Card 1/2

APPROVED FOR RELEASE: 06/19/2000 CIA-RDP86-00513R000824410004-8"

"APPROVED FOR RELEASE: 06/19/2000 CIA-RDP86-00513R000824410004-8

L 25386-65

ACCESSION NR: AP5002152

measurement of γ-radiation, the SA was measured in very thin films and also in Cs^{137}. SA in Co^{60} films was measured with an error of 0.5%; the result, 4.70 microcurie/g, is in exact agreement with the value of specific activity of the Co^{60} solution as determined by the $4\pi\beta-\gamma$-coincidence method and is in good agreement with the value 4.699 microcurie/g obtained by 25 laboratories in various countries. Orig. art. has: 2 figures, 2 formulas, and 1 table.

ASSOCIATION: VNIIMetrologii (VNII of Metrology)

SUBMITTED: 15Nov63 ENCL: 00 SUB CODE: NP

NO REF SOV: 002 OTHER: 002

Card 2/2

APPROVED FOR RELEASE: 06/19/2000 CIA-RDP86-00513R000824410004-8"

"APPROVED FOR RELEASE: 06/19/2000 CIA-RDP86-00513R000824410004-8

ACCESSION NR: AP4010303

S/0048/64/028/001/0107/0114

AUTHOR: Konstantinov, A.A.; Perepelkin, V.V.; Sazonova, T.Ye.

TITLE: Determination of the K fluorescence yields and K x-ray self-absorption coefficients for magnesium and aluminum [Report, Thirteenth Annual Conference on Nuclear Spectroscopy held in Kiev 25 Jan to 2 Feb 1963]

SOURCE: AN SSSR, Izvestiya Seriya fizicheskaya, v.28, no.1, 1964, 107-114

TOPIC TAGS: K fluorescence, x ray absorption, magnesium, aluminum

ABSTRACT: The results of measurements of the K fluorescence yield of different elements are used for constructing empirical yield curves; the curves plotted by different authors generally agree in the Z = 23 to 57 region, but in the regions of lower and higher atomic numbers the disparity between the curves based on different sets of data is appreciable. In the present work the K fluorescence yields from Mg and Al were determined with the aid of a 4 π counter by a method similar to that proposed by A.Compton (Phil.Mag.7,8,961, 1929) and by the method of absolute counting of K x-rays (A.A.Konstantinov, Pribory* i tekhnika eksperimenta, No.1,67,1959). The Mg and Al were in the form of 1 to 3 mg/cm^2 thick foils with an area greater

Card 1/2

APPROVED FOR RELEASE: 06/19/2000 CIA-RDP86-00513R000824410004-8"

ACC.NR: AP4010303

than 5 cm^2. The primary (excitation) x-ray sources were the electron-capture isotopes Cr^{51} (V^{51}) and Mn^{54} (Cr^{54}). In addition to the K yields, there were determined the self-absorption coefficients for the K x-rays. The results obtained for the K fluorescence yields are 2.80 ± 0.11% for Mg and 3.81 ± 0.15% for Al, which are at variance with the data of earlier investigators and in rather poor agreement with the values found by empirical formulas: the empirical values given by J.Laberrique-Frolow and P.Radvanyi (J.phys.et radium, 7, 944, 1956), which are the closest, are 2.0 and 2.8%, respectively. It is estimated that the error in determining the fluorescence yields in the present experiments does not exceed 4%. Orig.art.has: 13 formulas, 5 tables, and 4 figures.

ASSOCIATION: none

SUBMITTED: 00

DATE ACQ: 10Feb64

SUB CODE: PH, NS

NR SOV REF: 005

ENCL: 00

OTHER: 013

Card 2/2

"APPROVED FOR RELEASE: 06/19/2000 CIA-RDP86-00513R000824410004-8

L 4391-66 EWT(m) DIAAP DM

ACC NR: AP5028437 SOURCE CODE: UR/0089/65/019/001/0065/0067

AUTHOR: Konstantinov, A. A.; Perepelkin, V. V.; Kochin, A. Ye.

ORG: none

31
13

TITLE: International comparisons of the specific activity of ^{32}P, ^{60}Co, and ^{204}Tl solutions and the activity of ^{60}Co solid sources

SOURCE: Atomnaya energiya, v. 19, no. 1, 1965, 65-67

TOPIC TAGS: radiation chemistry, radioisotope, solution property, phosphorus, cobalt, thallium, scientific standard

ABSTRACT: Work on the international standardization of the specific activity of ^{32}P, ^{60}Co, and ^{204}Tl dissolved sources and ^{60}Co solid sources (i.e., specially prepared ^{60}Co sources on thin films), carried out in Jan. 1961 and in March and April 1963 in national laboratories of several countries, is described. Results are presented for ^{32}P, ^{60}Co solutions and ^{60}Co solid sources. Orig. art. has: 3 figures. [NA]

SUB CODE: NP, GC, GO / SUBM DATE: 09Jul64 / ORIG REF: 002 / OTH REF: 004

Card 1/1

UDC: 539.16.08

APPROVED FOR RELEASE: 06/19/2000 CIA-RDP86-00513R000824410004-8"

"APPROVED FOR RELEASE: 06/19/2000 CIA-RDP86-00513R000824410004-8

L 29986-65 EWT(1)/EWT(m) DIAAP/IJP(c)

ACCESSION NR: AP5005957 S/0048/65/029/002/0302/0303

AUTHOR: Konstantinov, A. A.; Sazonova, T. Ye.

17

19 B

TITLE: Determination of the L-fluorescence yield of manganese 55 by radioactive decay of iron 55

SOURCE: AN SSSR. Izvestiya. Seriya fizicheskaya, v. 29, no. 2, 1965, 302-303

TOPIC TAGS: manganese, radioactive decay, L fluorescence yield, electron capture, x ray, fluorescence yield

ABSTRACT: A proportional 4π counter was used in determining the L-fluorescence yield of Mn^{55} by a method described in an earlier paper by the authors (Akademiya nauk SSSR. Izvestiya. Seriya fizicheskaya, v. 24, 1960, 1480). Column 2 of Table 1 of the Enclosure lists the L-fluorescence yields for Mn^{55} determined in the present paper, and those of Ga^{71}, Cu^{65}, and V^{51} determined in the aforementioned earlier article. Since the fluorescence yields were determined during radioactive [illegible] (electron capture), the values of the yields [illegible] the average values [illegible] the [illegible] Column 1 of the table [illegible] the theoretical values of fluorescence yields calculated from the semi-empirical relationship developed by H. Jay

Card 1/3

APPROVED FOR RELEASE: 06/19/2000 CIA-RDP86-00513R000824410004-8"

"APPROVED FOR RELEASE: 06/19/2000 CIA-RDP86-00513R000824410004-8

L 29986-65

ACCESSION NR: AP5005957

$$\left(\frac{\bar{\omega}_L}{1-\bar{\omega}_L}\right)^{1/4} = A + BZ$$

with the constants A and B set equal to 0.065 and 0.007, respectively. Orig. art. has: 1 formula and 1 table. [CS]

ASSOCIATION: none

SUBMITTED: 00 ENCL: 01 SUB CODE: NP, OP

NO REF SOV: 003 OTHER: 002 ATD PRESS: 3197

Card 2/3

APPROVED FOR RELEASE: 06/19/2000 CIA-RDP86-00513R000824410004-8"

"APPROVED FOR RELEASE: 06/19/2000 CIA-RDP86-00513R000824410004-8

L 29986-65

ACCESSION NR: AP5005957 ENCLOSURE: 01

Table 1. Fluorescence yields for Mn[illegible], Ga[illegible]

Z	$\bar{\omega}_L$ exp,%	$\bar{\omega}_L$ theo,%
23	0.25 0.22	0.28
25	0.31 0.28	0.33
29	0.56	0.52
31	0.60 0.68	0.63

Card 3/3

APPROVED FOR RELEASE: 06/19/2000 CIA-RDP86-00513R000824410004-8"

"APPROVED FOR RELEASE: 06/19/2000 CIA-RDP86-00513R000824410004-8

KONSTANTINOV, A.A.; SINITSYN, V.V.; VINOGRADOV, G.V.

Automatic capillary viscosimeter AKV-4. Zav. lab. 31 no.2:239-241 '65. (MIRA 18:7)

APPROVED FOR RELEASE: 06/19/2000 CIA-RDP86-00513R000824410004-8"

"APPROVED FOR RELEASE: 06/19/2000 CIA-RDP86-00513R000824410004-8

GRITSUK, A.A., inzh.; KONSTANTINOV, A.G., inzh.

Conference on problems concerning the decrease in the level of insulation and increase of the voltages of a.c. power transmission lines. Elek. sta. 33 no.6:95-96 Je '62. (MIRA 15:7)
(Electric power distribution--Alternating current)

APPROVED FOR RELEASE: 06/19/2000 CIA-RDP86-00513R000824410004-8"

"APPROVED FOR RELEASE: 06/19/2000 CIA-RDP86-00513R000824410004-8

GRITSUK, A.A., inzh.; KONSTANTINOV, A.G., inzh.

Possibility of decreasing the insulation level and increasing the voltages of a.c. power transmission lines. Izv. vys. ucheb. zav.; energ. 5 no.3:103-106 Mr '62. (MIRA 15:4)

1. Ural'skiy politekhnicheskiy institut imeni S.M.Kirova.
(Electric lines--Overhead)

APPROVED FOR RELEASE: 06/19/2000 CIA-RDP86-00513R000824410004-8"

"APPROVED FOR RELEASE: 06/19/2000 CIA-RDP86-00513R000824410004-8

KONSTANTINOV, Aleksandr Georgiyevich, inzh.-mekhanizator; YUDENICH, V.P., red.; CHOTIYEV, S., tekhn. red.

[Performance of tractor driven machinery at increased speeds] Rabota traktornykh agregatov na povyshennykh skorostiakh. Frunze, Kirgizgosizdat, 1963. 51 p. (MIRA 17:2)

APPROVED FOR RELEASE: 06/19/2000 CIA-RDP86-00513R000824410004-8"

"APPROVED FOR RELEASE: 06/19/2000 CIA-RDP86-00513R000824410004-8

KONSTANTINOV, A.

Classification of retotheliopathies. Izv. Med. inst., Sofia 4-5:211-234 1951. (CLML 22:3)

1. Doctor. 2. Dimitrovo District Hospital (Director -- Dr. L. Radoslavov).

APPROVED FOR RELEASE: 06/19/2000 CIA-RDP86-00513R000824410004-8"

"APPROVED FOR RELEASE: 06/19/2000 CIA-RDP86-00513R000824410004-8

NOYEV, K.: KONSTANTINOV, A.

Retothelosis leucaemica lymphatica. Izv. med. inst., Sofia 1 no. 6-7:193-206 1952. (CLML 24:2)

1. Doctors. 2. Skin-Venereological Clinic (Director -- Prof. L. Popov) of Vulko Chervenkov and the Military Polyclinic (Director — Dr. Radevski), Sofia.

APPROVED FOR RELEASE: 06/19/2000 CIA-RDP86-00513R000824410004-8"

"APPROVED FOR RELEASE: 06/19/2000 CIA-RDP86-00513R000824410004-8

Konstantinov, Aleksandur

[INST. ZA KLINICHNA i Obshchestvena Meditsina]
[SEKTSIIA ZA. PROFESSIONALNI ZABOLIAVANIA]

Excerpta Medica 1/3 sec 17 Mar 55 Pub. Health, Social Medicine & etc.

1273. CONSTANTINOV A. *Investigation concerning the influence of ~~coal tar on the~~ labourers of the briquetteries of Dimitrovo (Bulgarian text) IZV. MED. INST. (Sofia) 1954, 9-10 (331-350) Graphs 2

A comparison of the actual diseases of workmen with morbid affections of white mice kept under the same environmental conditions. The labourers suffered from inflammatory affections of the eyes and the respiratory mucous membranes, diseases of the digestive apparatus and the blood-building organs. The well-known affections of the skin are also mentioned. The latter and eye diseases are partly caused by insolation. The most common causes of death are malignant neoplasms and pulmonary tb. The mice suffered also from dermatitis followed by complete loss of hair, cachexia and deafness, but showed no neoplasms. As measures for prevention of occupational diseases among the labourers the author recommends (1) improvement in the working procedure of the factories, (2) better hygienic circumstances for the labourers and (3) the use of a lanoline barrier cream, containing 3-5% of quinine. Author

APPROVED FOR RELEASE: 06/19/2000 CIA-RDP86-00513R000824410004-8"

"APPROVED FOR RELEASE: 06/19/2000 CIA-RDP86-00513R000824410004-8

KONSTANTINOV, Aleksandur G., d-r.

Studies on the effect of coal tar on workers in the briquette factory in Dimitrovo. Izv. med. inst., Sofia Vol. 9-10:331-352 1954.

1. Institut za Klinichna i Obshchestvena Meditsina (direktor: Akad. Tsv. Kristanov) pri BAN.
(COAL TAR, effects.)

APPROVED FOR RELEASE: 06/19/2000 CIA-RDP86-00513R000824410004-8"

"APPROVED FOR RELEASE: 06/19/2000 CIA-RDP86-00513R000824410004-8

KONSTANTINOV, A. G.

Superficial moniliasis with atypical localization in pancreatic carcinoma. Suvrem.med.,Sofia 5 no.10:115-116 1954.

1. Iz Mediko-sanitarnata chast pri DMP mina Georgi Dimitrov, gr. Dimitrovo. (Gl. lekar: B. Tomov)

(PANCREAS, neoplasms,
with moniliasis of skin)
(SKIN, diseases,
moniliasis, in pancreatic cancer)
(MONILIASIS,
skin, in pancreatic cancer)

APPROVED FOR RELEASE: 06/19/2000 CIA-RDP86-00513R000824410004-8"

"APPROVED FOR RELEASE: 06/19/2000 CIA-RDP86-00513R000824410004-8

KONSTANTINOV, A. G.

Necrobiosis lipoidica diabeticorum with tumoral changrs of the skin. Suvrem.med., Sofia 5 no.10:116-118 1954.

1. Iz Mediko-sanitarnata chast pri DMP mina G. Dimitrov, gr. Dimitorovo. (Gl. lekar: B. Tomov)
(DIABETES MELLITUS, complications, necrobiosis lipoidica with tumors changes of skin)

APPROVED FOR RELEASE: 06/19/2000 CIA-RDP86-00513R000824410004-8"

"APPROVED FOR RELEASE: 06/19/2000 CIA-RDP86-00513R000824410004-8

KONSTANTINOV, Al., Dr.

Research on working conditions in cork industry in Bulgaria. Izv. Mikrob. inst., Sofia no.8:279-302 1957.
(INDUSTRIAL HYGIENE
working cond. in cork indust. in Bulgaria (Bul))

APPROVED FOR RELEASE: 06/19/2000 CIA-RDP86-00513R000824410004-8"

"APPROVED FOR RELEASE: 06/19/2000 CIA-RDP86-00513R000824410004-8

KONSTANTINOV, Aleks. D-r.

Chronic pemphigus; analysis of 240 cases. Izv. Mikrob. inst., Sofia no.8:339-371 1957.

1. Klinika po kazhni i venericheski bolesti (dir.: prof. L. Popov) pri visshiia meditsinski institut v Sofiia Kandidat na meditsinskite nauki, bivsh st. asistent v kazhnata klinika na VMI v Sofiia.
(PEMPHIGUS
vulgaris, review (Bul))

APPROVED FOR RELEASE: 06/19/2000 CIA-RDP86-00513R000824410004-8"

"APPROVED FOR RELEASE: 06/19/2000 CIA-RDP86-00513R000824410004-8

EXCERPTA MEDICA Sec 13 Vol 13/6 Dermatology June 59

1410. OCCUPATIONAL DERMATOSES AMONG COAL-MINERS IN DIMITROVO (Serbian text) - Konstantinov Al. - IZV. MED. INST. (Sofija) 1957, No 8, 14 (233-277) Graphs 29 Illus, 1

An analysis is presented of the occupational diseases observed in the coal-miners of Dimitrovo during the period 1949-1956, with a detailed discussion of the data on the frequency of affections observed in 1950 and in 1951. A description is given of the objective conditions of the production procedure considered from the dermatological point of view and of the working and living conditions of the miners, and statistical, clinical and experimental studies are reported, from which it appears that during the period examined skin diseases constituted 11-17% of all cases of disease seen among the miners. Of these, pyodermias represented 74%, itching dermatoses about 8%, artificial dermatitis some 5% and burns from battery lamps 1.2-2% of the total. A more detailed analysis of the most frequent affections is added.

(XIII, 17)

SEKTSIIA ZA DERMATO-BENEROLOGIIA
INST. ZA KLINICHNA i obshchestvena
MEDITSINA

APPROVED FOR RELEASE: 06/19/2000 CIA-RDP86-00513R000824410004-8"

"APPROVED FOR RELEASE: 06/19/2000 CIA-RDP86-00513R000824410004-8

L 29933-66 EWT(1) GW

ACC NR: AP6003336 SOURCE CODE: UR/0387/66/000/001/0063/0067

AUTHOR: Konstantinova, A. G.

ORG: Mining Institute im. A. A. Skochinskiy (Institut gornogo dela)

19
B

TITLE: Using the seismoacoustic method for studying [rock] sample inhomogeneity

SOURCE: AN SSSR. Izvestiya. Fizika Zemli, no. 1, 1966, 63-67

TOPIC TAGS: rock mechanics, seismoacoustic wave propagation, rock property, rock strength, coal

ABSTRACT: Some cylindrical or prismatic but most of them 40—200 mm cubes specimens of coal from different deposits were tested in an attempt to introduce quantitative characteristics for inhomogeneity in the specimens based on analysis of the elastic oscillatory processes which took place when the specimens were subjected to uniaxial compression in 10-, 100-, and 250-ton presses. Graphs are given showing the energy of elastic oscillations as a function of time under pressure. Two phases were observed in elastic energy distribution. The first (initial) phase is characterized by protracted duration and a relatively low energy level, while the opposite is true for the second, or principal, phase, i.e., short duration and an extremely high energy level. Specimens of higher strength show a lower energy release E_{in} in the first phase, and a higher portion of energy E_{pr} released in the second phase. It is postulated that the first phase is caused by the growth of fissures at points where

Card 1/2 UDC: 552.1:5

APPROVED FOR RELEASE: 06/19/2000 CIA-RDP86-00513R000824410004-8"

"APPROVED FOR RELEASE: 06/19/2000 CIA-RDP86-00513R000824410004-8

BULGARIA

Kr. BALABANOV, Al. KONSTANTINOV and Ves. NAUMOV, Department of Dermatology of Medical College (Katedra po kozhni bolesti pri VMI) Head (rukovoditel na katedrata) Prof Kr. BALABANOV, Sofia.

"Eccrine Spiradenoma."

Sofia, Suvremenna Meditsina, Vol 14, No 4, 1963; pp 64-69.

Abstract [English summary modified]: Description of first case reported in Bulgaria: small extremely painful tumor on shoulder of 28-year-old woodcutter. Very detailed histological data and discussion; speculation about origin from either eccrine or perhaps adjacent apocrine glands. Six photomicrographs, 10 Western references.

1/1

APPROVED FOR RELEASE: 06/19/2000 CIA-RDP86-00513R000824410004-8"

"APPROVED FOR RELEASE: 06/19/2000 CIA-RDP86-00513R000824410004-8

Konstantinov, A.I.

3(0) PHASE I BOOK EXPLOITATION SOV/2205

Vsesoyuznyy nauchno-issledovatel'skiy institut fiziko-tekhnicheskikh i radiotekhnicheskikh izmereniy

Izmereniye vremeni; sbornik (Measurement of Time; Collection of Articles) Moscow, Standartgiz, 1958. 115 p. (Series: Its: Trudy, /vyp./ 1) Errata slip inserted. 2,000 copies printed.

Additional Sponsoring Agency: USSR. Komitet standartov, mer i izmeritel'nykh priborov.

Resp. Ed. of this vol: A.I. Konstantinov; Editorial Board: G.D. Burdun, A.L. Bakler, V.I. Yermakov (Deputy Chairman), M.K. Zhokhovskiy, L.M. Zaks, A.I. Konstantinov, V.F. Lubentsov (Chairman), M.P. Orlova, L.M. Pyatigorskiy, I.G. Rusakov, N.A. Sorokin (Resp. Secretary), V.N. Titov; Ed. of Publishing House: S.M. Devydova; Tech. Ed.: M.A. Kondrat'yeva.

PURPOSE: This book is intended for astronomers, geodesists, and other scientific personnel interested in the precise determination of time.

COVERAGE: This is the first of a series of periodicals to be published by the

Measurement of Time (Cont.) SOV/2205

All-Union Scientific Research Institute of Physical-Technical and Radio-Technical Measurements. The present volume is concerned with the measurement of time and represents some of the work of the Central Scientific Research Bureau of the Unified Time Service during the years 1947-1951. References accompany each article.

TABLE OF CONTENTS:

Lubentsov, V.F. The State Time Service
The article covers the development of the State Time Service for the past ten years. The development is described in relation to the corresponding requirements of science and industry. 5

Pavlov, N.N. The Views of V. Ya. Struve on the Problem of Evaluating the Precision of Interpolation and Extrapolation of Clock Corrections
This article is devoted to the study of clock rates. Comparisons are made of the views and methods of Gauss, Struve, and Preypich. 13

Dolgov, P.N. The Differential Method of Deriving Mean Corrected Moments of Rhythmic Time Signals and Evaluating Their Accuracy.
This article describes the technique of computing standard time by differential method. This method was developed for practical use in the Time Service by N. Kh. Preypich. 25

Card 2/4

Konstantinov, A.I. and A.I. Solov'yev. Basic Determination of the Longitude of the Astronomic Station in Irkutsk During 1947-1948
This article describes the program used in the precise determination of the difference in longitude Moscow-Irkutsk. This work served to give the Irkutsk Time Service a precise longitude value and to establish a base for determining personal equations of astronomers. 72

Dolgov, P.N. The Work of the Time Service of the Soviet Union During 1948, 1949, and 1950
This article evaluates the results of the time services of the USSR for the years cited based on the analysis of the monthly bulletins of moments of time signals and moments of standard time. 103

AVAILABLE: Library of Congress (QB 213.V9)

Card 4/4

MM/gmp
9-1-59

2

APPROVED FOR RELEASE: 06/19/2000 CIA-RDP86-00513R000824410004-8"

"APPROVED FOR RELEASE: 06/19/2000 CIA-RDP86-00513R000824410004-8

02877

S/035/60/000/04/14/017
A001/A001

Translation from: Referativnyy zhurnal, Astronomiya i Geodeziya, 1960, No. 4, p. 70, # 3383

3.1230 3.2300

AUTHOR: Konstantinov, A. I.

TITLE: On Relating Photographic Observations of Earth's Artificial Satellites to Astronomical Time

PERIODICAL: Byul. st. optich. nablyudeniya iskusstv. sputnikov Zemli, 1959, No. 4, pp. 9-11 (English summary)

TEXT: The author cites errors in comparing the readings of clocks with signals of precise time, which arise in various recording apparatus. A method is described for reducing the errors in relating the results of observations of the Earth's artificial satellites to the astronomical time scale. It is proposed to determine systematically the lag of signals in a radioreceiver separately for short and long wavelengths, to reduce the error introduced by the pulse attachment to the receiver and to transform the chronograph, for the period of visibility of an Earth's artificial satellite, into an instrument which "stores the time". This makes it possible to raise the accuracy of interpolation of time at the

Card 1/2

Chief, Dept. Time Service
A.U. Sci Res Inst. Physics-Tech & Radiotech Measurements

APPROVED FOR RELEASE: 06/19/2000 CIA-RDP86-00513R000824410004-8"

"APPROVED FOR RELEASE: 06/19/2000 CIA-RDP86-00513R000824410004-8

82477
S/035/60/000/04/14/017
A001/A001

On Relating Photographic Observations of Earth's Artificial Satellites to Astronomical Time

instant of observing an Earth's artificial satellite, to exclude the employment of unreliable signal reception, to introduce corrections for the time of radiosignal propagation, and if possible, to avoid the reception of time checking signals (6 points) or, if they are used, to estimate their systematic errors.

A. M. Lozinskiy

Card 2/2

APPROVED FOR RELEASE: 06/19/2000 CIA-RDP86-00513R000824410004-8"

"APPROVED FOR RELEASE: 06/19/2000 CIA-RDP86-00513R000824410004-8

06180

25 (5), 28 (1) SOV/115-59-11-8/36

AUTHOR: Konstantinov, A.I.

TITLE: A Device for Checking Chronometers

PERIODICAL: Izmeritel'naya tekhnika, 1959, Nr 11, pp 24-25

ABSTRACT: The author describes a method for checking chronometers which is more accurate, but less difficult, than the method presently used for checking chronometers at VNII Komiteta standartov, mer i izmeritel'nykh priborov (VNII of the Committee of Standards, Measures and Measuring Instruments). The VNII method consists of a comparison of the coincidence of signals obtained from the chronometer to be checked with signals of the time service. The error of this method is about ± 0.04 seconds. The method is not suitable for checking a larger number of chronometers. The method suggested by the author is based on a reference contact clock and a recording instrument with a recording error of ± 0.01 second. The strokes of the chronometer balance are converted to electrical pulses by a piezoelectric pick-up, a differentiating

Card 1/2

APPROVED FOR RELEASE: 06/19/2000 CIA-RDP86-00513R000824410004-8"

"APPROVED FOR RELEASE: 06/19/2000 CIA-RDP86-00513R000824410004-8

06180
SOV/115-59-11-8/36

A Device for Checking Chronometers

circuit, an amplifier and an electromagnetic relay. The author describes this method briefly and shows the circuit diagram of the amplifier. The entire checking procedure lasts about 2-3 minutes and does not cause any strain on the observer. The error in determining the chronometer correction does not exceed ± 0.002 seconds when using a printing chronograph of the "Etalon" plant. The chronometers to be tested may be placed into a thermostat for establishing the temperature influence. A larger number of chronometers may be tested. This method was tested at the time service section of VNIIFTRI and showed satisfactory results. There is 1 circuit diagram.

Card 2/2

APPROVED FOR RELEASE: 06/19/2000 CIA-RDP86-00513R000824410004-8"

"APPROVED FOR RELEASE: 06/19/2000 CIA-RDP86-00513R000824410004-8

S/035/61/000/004/012/058
A001/A101

3,1200

B

AUTHOR: Konstantinov, A. I.

TITLE: On the work of the Time Service of the All-Union Scientific Research Institute of Physico-Engineering and Radio-Engineering Measurements, VNIIFTRI

PERIODICAL: Referativnyy zhurnal. Astronomiya i Geodeziya, no. 4, 1961, 16, abstract 4A205 ("Tr. 14-y Astrometr. konferentsii SSSR, 1958". Moscow-Leningrad, AN SSSR, 1960, 83-85, Engl. summary)

TEXT: The author estimates the accuracy of astronomical time determinations with the transit instrument of the Moscow Laboratory of VNIIFTRI. A group time keeping consisting of 5-6 quartz clocks assured the furnishing of signals with an average error of 0.03 sec. Transmission of second and rhythmical signals was conducted through stations PBM (RVM), POP (ROR), PEC (RES) (18 transmissions). Standard time instants of time signal delivery were calculated by N. N. Pavlov's method on the basis of data from 16 Time Services. Corrections for the pole motion were introduced according to data of the Poltava Gravimeric Observatory. Information is presented which characterizes the accuracy of determining standard

Card 1/2

Card 1/2

APPROVED FOR RELEASE: 06/19/2000 CIA-RDP86-00513R000824410004-8"