"APPROVED FOR RELEASE: 06/14/2000 CIA-RDP86-00513R000824810009-9

KOROL, A.G.
Zhitomir Oblast Vet. Bact. Lab. Ukrainian SSR
"Exchange of experience."
SO: Veterinariya 28(3), 1951, p. 52

APPROVED FOR RELEASE: 06/14/2000 CIA-RDP86-00513R000824810009-9"

"APPROVED FOR RELEASE: 06/14/2000 CIA-RDP86-00513R000824810009-9

Korol', A. G.

USSR/Medicine, Veterinary - Brucellosis

"Improvement in the Reaction of Agglutination for the Diagnosis of Brucellosis in Cattle," Vet Phys A. G. Korol', City of Kerson

Veterinariya, Vol 30, No 8, pp 15,16

Investigation of 4,000 different samples of cattle serum has resulted in the development of 2 variations of a modified reaction of agglutination. The modified reactions are by far superior in sensitivity to the standard agglutination reaction and possess high specificity. Increased sensitivity of the modified agglutination reaction removes the necessity of applying the complement-fixation reaction in brucellosis control among cattle.

265 T 34

APPROVED FOR RELEASE: 06/14/2000 CIA-RDP86-00513R000824810009-9"

"APPROVED FOR RELEASE: 06/14/2000 CIA-RDP86-00513R000824810009-9

KOROL', A.G., vrach-bakteriolog

Role of murine rodents in the spreading of swine brucellosis. Veterinariia 40 no.2:38-39 F '63. (MIRA 17:2)

1. Khersonskaya oblastnaya sanitarno-epidemiologicheskaya stantsiya.

APPROVED FOR RELEASE: 06/14/2000 CIA-RDP86-00513R000824810009-9"

"APPROVED FOR RELEASE: 06/14/2000 CIA-RDP86-00513R000824810009-9

KOROL', A.G.

Excretion of the pathogen of brucellosis from wild murine rodents. Lab. delo 8 no.10:55-57 '62 (MIRA 17:4)

1. Khersonskaya oblastnaya sanitarno-epidemiologicheskaya stantsiya (glavnyy vrach B.S. Bessalov).

APPROVED FOR RELEASE: 06/14/2000 CIA-RDP86-00513R000824810009-9"

"APPROVED FOR RELEASE: 06/14/2000 CIA-RDP86-00513R000824810009-9

L 18372-65 EWT(1)/EWA(b) Pb-4/Pa-4 APGC(c)/AMD JK
ACCESSION NR: AP5003097 S/0016/64/000/011/0027/0031

AUTHOR: Korol', A. G.

TITLE: Brucella-like cultures isolated from murid steppe rodents

SOURCE: Zhurnal mikrobiologii, epidemiologii i immunobiologii, no. 11, 1964, 27-31

TOPIC TAGS: brucellosis, immunology, pathology, microbiology

Abstract: Twenty-nine Brucella-like cultures were isolated from murid rodents during four years of research on tularemia in a region where no cases of brucellosis had been reported among farm animals. Twenty-seven of the cultures were isolated from Mus musculus L. and one each from Apodemus silvaticus and Cricetulus migratorius Pall. The cultures were classified in the genus Brucella. Except for strain No 25, the cultures showed cultural peculiarities: larger cell size and larger consumption of culture medium, especially in the original culture. Except for strain No 25, none of the cultures could be identified as belonging to one of the three main types of Brucella (B. abortus, B. melitensis, and B. suis). It is assumed that adaptation to mice is responsible for these changes. All cultures caused macro- and microscopic pathological anatomical changes observed in brucellosis when they were injected (100 microbe cells) into white mice. In guinea pigs

Card 1/2

APPROVED FOR RELEASE: 06/14/2000 CIA-RDP86-00513R000824810009-9"

"APPROVED FOR RELEASE: 06/14/2000 CIA-RDP86-00513R000824810009-9

L 18372-65

ACCESSION NR: AP5003097

inoculated with 10,000-100,000 microbe cells, positive immunological reactions took place with standard brucellosis antigens and corresponding pathological-anatomical changes took place in the organs.

ASSOCIATION: Khersonskaya oblastnaya sanitarno-epidemiologicheskaya stantsiya (Kherson Oblast Sanitary-Epidemiological Station)

SUBMITTED: 11Nov63 ENCL: 00 SUB CODE: LS

NO REF SOV: 010 OTHER: 003 JPRS

2/2

APPROVED FOR RELEASE: 06/14/2000 CIA-RDP86-00513R000824810009-9"

"APPROVED FOR RELEASE: 06/14/2000 CIA-RDP86-00513R000824810009-9

KOROL', A.G.; TEREMENKO, L.A.

Spontaneous brucellosis in rodents. Trudy Inst. zool. AN Kazakh. SSR 22:216 '64. (MIRA 17:12)

APPROVED FOR RELEASE: 06/14/2000 CIA-RDP86-00513R000824810009-9"

"APPROVED FOR RELEASE: 06/14/2000 CIA-RDP86-00513R000824810009-9

BESSALOV, V.S.; PANASOVSKIY, V.A.; KOROL', A.G.; TEREMENKO, L.A.; BONDARENKO, L.F.; TIMOFEYEV, M.A., SHIRYAYEV, D.T.

Outbreak of tularemia on Biryuchiy Island. Zhur.mikrobiol.,epid. i immun. 41 no.5:54-57 My '64. (MIRA 18:2)

1. Khersonskaya oblastnaya sanitarno-epidemiologicheskaya stantsiya i Rostovski, protivochumnyy institut.

APPROVED FOR RELEASE: 06/14/2000 CIA-RDP86-00513R000824810009-9"

"APPROVED FOR RELEASE: 06/14/2000 CIA-RDP86-00513R000824810009-9

KOROL', A.G.

Cultures similar to Brucella, isolated from micelike steppe rodents. Zhur. mikrobiol., epid. i immun. 41 no.11:27-31 '65. (MIRA 18:5)

1. Khersonskaya oblastnaya sanitarno-epidemiologicheskaya stantsiya.

APPROVED FOR RELEASE: 06/14/2000 CIA-RDP86-00513R000824810009-9"

"APPROVED FOR RELEASE: 06/14/2000 CIA-RDP86-00513R000824810009-9

KOROL', A. K.

"Coordinates of the Earth's Pole From 1951.8 to 1929,0", Main Astronomical Observatory, Academy of Sciences Ukrainian SSR, Kiev, 7 pp, 1949.

APPROVED FOR RELEASE: 06/14/2000 CIA-RDP86-00513R000824810009-9"

"APPROVED FOR RELEASE: 06/14/2000 CIA-RDP86-00513R000824810009-9

KOROL', A.K.

Movement of the pole from 1915.8 to 1929. Trudy Polt.grav. obser. 3:162-242 '50. (MIRA 8:1)
(Latitude variation)

APPROVED FOR RELEASE: 06/14/2000 CIA-RDP86-00513R000824810009-9"

"APPROVED FOR RELEASE: 06/14/2000 CIA-RDP86-00513R000824810009-9

KOROL', A.K.

Regulation and examination of the large vertical circle. Izv.Glav. astron.obser. 1 no.2:3-19 '56. (MLRA 9:8)
(Vertical circle)

APPROVED FOR RELEASE: 06/14/2000 CIA-RDP86-00513R000824810009-9"

"APPROVED FOR RELEASE: 06/14/2000 CIA-RDP86-00513R000824810009-9

KONOL', A.K.; KONIN, V.V.

Catalog of declinations of 588 stars of the FKSZ in the FK3 system compiled from observations made with a transit circle during the years 1952-1953. Izv. Glav. astron. obser. AN URSR 2 no.1:3-72 '57.
(Stars--Catalogs) (MIRA 11:2)

APPROVED FOR RELEASE: 06/14/2000 CIA-RDP86-00513R000824810009-9"

"APPROVED FOR RELEASE: 06/14/2000 CIA-RDP86-00513R000824810009-9

KOROL', A.K.

Correcting bending distrotions in taking observations on meridian circles. Astron. tsir. no.182:8 Je '57. (MIRA 11:3)

1. Glavnaya astronomicheskaya observatoriya AN USSR, Kiyev-Goloseyevo.
(Transit circle)

APPROVED FOR RELEASE: 06/14/2000 CIA-RDP86-00513R000824810009-9"

"APPROVED FOR RELEASE: 06/14/2000 CIA-RDP86-00513R000824810009-9

KOROL', A.K. (Goloseyevo).

Coordinates of the Main Astronomic Observatory of the Academy of Sciences of the Ukrainian S.S.R. Astron. tsir. no.183:15 Jl '57.
(Ukraine--Astronomical observatories) (MIRA 11:3)
(Geographical positions)

APPROVED FOR RELEASE: 06/14/2000 CIA-RDP86-00513R000824810009-9"

"APPROVED FOR RELEASE: 06/14/2000 CIA-RDP86-00513R000824810009-9

KOROL', A.K.; KONIN, V.V.

Catalog of declinations of 67 stars included in the program of Poltava zenith telescope. Izv.Glav.astron.obser.AN URSR 2 no.2:3-22 '58. (MIRA 12:2)

(Stars--Catalogs)

APPROVED FOR RELEASE: 06/14/2000 CIA-RDP86-00513R000824810009-9"

"APPROVED FOR RELEASE: 06/14/2000 CIA-RDP86-00513R000824810009-9

KOROL', A.K.

Visual observations of the first Soviet artificial earth satellites at the Main Astronomical Observatory of the Academy of Sciences of the Ukrainian S.S.R. Mezhdunar. geofiz. god [Kiev] no.2:116-119 '60. (MIRA 14:1)

1. Chief Astronomical Observatory of the Academy of Sciences of the Ukrainian S.S.R.
(Artificial satellites—Tracking)

APPROVED FOR RELEASE: 06/14/2000 CIA-RDP86-00513R000824810009-9"

"APPROVED FOR RELEASE: 06/14/2000 CIA-RDP86-00513R000824810009-9

KOROL', A.K.

Using graphic methods in processing observations on a vertical circle for determining relative declinations. Izv.Glav.astron.obser.AN URSR 3 no.2:3-15 '61. (MIRA 14:4)

(Stars—Observations)

APPROVED FOR RELEASE: 06/14/2000 CIA-RDP86-00513R000824810009-9"

"APPROVED FOR RELEASE: 06/14/2000 CIA-RDP86-00513R000824810009-9

KOROL', A.K.

Latitude and longitude of the Main Astronomical Observatory of the Academy of Sciences of the Ukrainian S.S.R. Izv. Glav. astron. obser. AN USSR 5 no.1:3-11 '63. (MIRA 16:6)
(Ukraine--Astronomical observatories)
(Geographical positions)

APPROVED FOR RELEASE: 06/14/2000 CIA-RDP86-00513R000824810009-9"

"APPROVED FOR RELEASE: 06/14/2000 CIA-RDP86-00513R000824810009-9

41106

9.6150
21.6600

P/008/62/000/009/003/003
D265/D308

AUTHORS: Wiraszko, Mieczysław, Engineer and Korol, Aleksander, Engineer

TITLE: Electronic electrometer particularly suitable for measuring the amount of γ- radiation

PERIODICAL: Technika Lotnicza, no. 9, 1962, 278 - 279

TEXT: A description is given of the Polish Patent No. 40393, class 21 g 18/01, granted to the authors from February 9, 1957, first published December 20, 1957, for an electronic electrometer which employs a vibrating dynamic condenser excited by the generator. The ionization chamber is in the form of a cylindrical capacitor suitable for measuring γ- radiation in the range of 0-150 miliroentgens. It is charged to a definite potential by the electrometer's own voltage stabilizer. It is then subjected to γ- radiation thus undergoing the discharge which is proportional to the product of the radiation intensity and time. By placing it in a socket of

Card 1/2

APPROVED FOR RELEASE: 06/14/2000 CIA-RDP86-00513R000824810009-9"

"APPROVED FOR RELEASE: 06/14/2000 CIA-RDP86-00513R000824810009-9

Electronic electrometer ... P/008/62/000/009/003/003
D265/D308

the dynamic condenser the displacements of electrostatic charges are detected which, after suitable amplification, are measured by observing the meter readings.

ASSOCIATION: Spółdzielnia Pracy 'Elektromatyka' Warszawa (Elektromatyka Co-operative, Warsaw)

Card 2/2

APPROVED FOR RELEASE: 06/14/2000 CIA-RDP86-00513R000824810009-9"

"APPROVED FOR RELEASE: 06/14/2000 CIA-RDP86-00513R000824810009-9

TARZYMANOV, G.A. Prinima [illegible] KORDL[illegible], A.M., inzh., PAKHOMOV, V.V., inzh.; TYUSHEV, A.P., inzh., ZHED', Ye.M., inzh., retsenzent; LISITSYN, N.M., kand. tekhn. nauk, red.

[Design of machine tools; handbook for technical designers] Proektirovanie metallorezrushchikh stankov; v pomoshch' tekhniko-konstruktoru. Moskva, Mashinostroenie, 1965. 235 p. (MIRA 18:12)

APPROVED FOR RELEASE: 06/14/2000 CIA-RDP86-00513R000824810009-9"

"APPROVED FOR RELEASE: 06/14/2000 CIA-RDP86-00513R000824810009-9

FONDI', A. .

"Improving the Functional Properties of Clayey Masses by Colloid Chemical Methods." Khar'kov Polytechnic Inst Imeni V. I. Lenin, Min Higher Education USSR, Khar'kov, 1954. (KL, No 1, Jan 55)

Survey of Scientific and Technical Dissertations Defended at USSR Higher Educational
SO: Sum. No. 578, 29 Jul 55

APPROVED FOR RELEASE: 06/14/2000 CIA-RDP86-00513R000824810009-9"

"APPROVED FOR RELEASE: 06/14/2000 CIA-RDP86-00513R000824810009-9

KOROL, A. N.

7

The use of surface-active agents in the plastic extrusion process for producing ceramic ware /5G. V. Kukolev and A. N. Korol (V. I. Lenin Polytech. Inst., Kharkov). *Steklo i Keram.* 14, No. 9, 14-17(1957).—With the use of a variable-speed lab. extrusion press provided with a recording wattmeter the effects of the addn. of various surface-active substances to clay (fireclay, kaolin, and brick clay) batches with 27-30% water content were detd. in terms of rates of extrusion as functions of the wattage input. Addns. of the following agents in the order of 0.05% to 0.25% of the wt. of the clay were made: (*a*) Na oleate, (*b*) $AlCl_3$, (*c*) control (no addn.), (*d*) sulfite waste liquor, (*e*) straw ext., (*f*) Na_2CO_3, (*g*) sulfite liquor plus Na_2CO_3, (*h*) lignite ext., and (*i*) straw ext. With addn. of these substances in the order given the power demand per unit of product and the value of the ratio G/S, where G is the frictional resistance to extrusion and S the surface area of 1 g. of the clay, are reduced, whereas the water-carrying capacity of the clay and the output of the press are raised, the latter by 20% in most cases except with Na oleate where it is reduced by a like amt. For example, data plotted for clay samples contg. the above additives show that for an extrusion rate of 135 kg./hr. 230, 278, 240, 210, 209, 203, 195, 192, and 184 w., resp., are necessary. The tensile strength of the piece after firing at 900° is raised from 25 to 50%. The phenomena observed are discussed from the standpoint of the effects of these agents on the adsorbed water films.

H. L. Olin

5
4E4
4E6
4E2

APPROVED FOR RELEASE: 06/14/2000 CIA-RDP86-00513R000824810009-9"

"APPROVED FOR RELEASE: 06/14/2000 CIA-RDP86-00513R000824810009-9

[illegible], B.N.; KOROL', A.N.

Automatic rotation system for a telescope dome. Biul. Abast. astrofiz. obser. no.30:139-141 '64. (MIRA 17:5)

APPROVED FOR RELEASE: 06/14/2000 CIA-RDP86-00513R000824810009-9"

"APPROVED FOR RELEASE: 06/14/2000 CIA-RDP86-00513R000824810009-9

L 34485-65 EWT(1)/EWG(v) Pe-5/Pae-2 GW

ACCESSION NR: AT5007325 S/2501/64/000/030/0139/0141

21
B+1

AUTHOR: Dzhaparidze, B. N.; Korol', A. N.

TITLE: System for automatic rotation of a telescope dome

SOURCE: Abastumani. Astrofizicheskaya observatoriya. Byulleten', no. 30, 1964, 139-141

TOPIC TAGS: telescope dome, telescope dome control, telescope guide, celestial tracking, satellite tracking

ABSTRACT: A low-cost system is described which requires practically no energy between dome movements and contains no coordinate converters nor electronic or dynamo-electric amplifiers. The work cycle begins when the telescope objective reaches the edge of the dome opening where a probe is grounded to actuate a relay which switches on an AC phase-rotor motor for a predetermined fixed interval. The motor control circuit is shown schematically and discussed. Orig. art. has: 1 figure.

ASSOCIATION: None

SUBMITTED: 00Dec62 ENCL: 00 SUB CODE: AA, EE

NO REF SOV: 000 OTHER: 000

Card 1/1

APPROVED FOR RELEASE: 06/14/2000 CIA-RDP86-00513R000824810009-9"

"APPROVED FOR RELEASE: 06/14/2000 CIA-RDP86-00513R000824810009-9

MOHOL', A. N.

1496 Uluchshenive rabochikh svoystv glinistykh mass kolloidno-khimicheskimi metodami. Kharkov, 1954. 13 s, 19sm. (M-vo vyssh. obrazovaniya SSSR. Khark polifekhn in-t im. V. I. Lenina) 100 ekz besplat. (54-52101)

SO: Knizhnaya Letopis', Vol. 1, 1955

APPROVED FOR RELEASE: 06/14/2000 CIA-RDP86-00513R000824810009-9"

"APPROVED FOR RELEASE: 06/14/2000 CIA-RDP86-00513R000824810009-9

KOROL', A.N.; ZNAMENSKAYA, N.B.; LOSEV, L.P.

Automatic determination of moisture in gas with Fischer's reagent.
Zav.lab. no.11:1305-1307 '59. (MIRA 13:4)
(Gases-- Analysis) (Moisture)

APPROVED FOR RELEASE: 06/14/2000 CIA-RDP86-00513R000824810009-9"

"APPROVED FOR RELEASE: 06/14/2000 CIA-RDP86-00513R000824810009-9

KOROL', A. N.

Gas adsorption chromatography in the analysis of gases in the production of phenol, acetone, and synthetic alcohol. Khim.i .h.topl.i masel 5 no.6:60-63 Ja '60. (MIRA 13:7)

1. Groznenskiy khimicheskiy zavod.
(Phenol) (Acetone) (Alcohol) (Gas chromatography)

APPROVED FOR RELEASE: 06/14/2000 CIA-RDP86-00513R000824810009-9"

"APPROVED FOR RELEASE: 06/14/2000 CIA-RDP86-00513R000824810009-9

5(3)

S/032/60/026/01/015/052
B010/B123

AUTHOR: Korol', A. N.

TITLE: Analysis of Products of the Preparation of Phenol and Synthetic Ethanol by the Method of Gas-Liquid Chromatography

PERIODICAL: Zavodskaya laboratoriya, 1960, Vol 26, Nr 1, pp 51-54 (USSR)

ABSTRACT: Isopropylbenzene is obtained by benzene alkylation by means of propylene as an intermediate stage of phenol synthesis. The reaction mass contains some by-products (Table 1). For the quality control of the synthetic alcohol the isopropanol content has to be determined, as well as that of diethyl ether and acetic anhydride (vide GOST). For a quick and precise control of the phenol preparation and of synthetic alcohol, gas-liquid chromatographic method is described. As detector a slightly altered pick-up of the GEUK-21 gas analyser is used (Fig, scheme of the apparatus). The pulsations of the detector are recorded by an electronic EPP-09 potentiometer. For separating the components of the reaction

Card 1/3

APPROVED FOR RELEASE: 06/14/2000 CIA-RDP86-00513R000824810009-9"

"APPROVED FOR RELEASE: 06/14/2000 CIA-RDP86-00513R000824810009-9

mass of benzene alkylation, transformer oil was used as static liquid whereby a separation corresponding approximately to the boiling points could be achieved (Table 2 analysis results of artificial mixtures of the reaction mass type). The quantitative determination was made by the method of inner standard (toluene), the figures for the calculation being taken from the areas and peak heights of the components. A considerable determination error observed for polyalkylbenzenes is explained by blurring of the peaks and lack of accurate data on the composition of this fraction. For the analysis of the synthetic alcohol dibutyl phthalate, α-methyl-β-benzoylstyrene, triethanolamine and glycerine were tested as static liquids (Table 3), and best results were obtained with glycerine. A series of analyses was made (Table 4 shows results obtained from artificial mixtures), n-butanol being used as inner standard. A typical chromatogram is given (Fig 3). For increasing the

APPROVED FOR RELEASE: 06/14/2000 CIA-RDP86-00513R000824810009-9"

"APPROVED FOR RELEASE: 06/14/2000 CIA-RDP86-00513R000824810009-9

Analysis of Products of the Preparation of Phenol and Synthetic Ethanol by the Method of Gas-Liquid Chromatography

S/032/60/026/01/015/052
B010/B123

sensitivity of the detector hydrogen was used as carrier gas. The Soviet scientists D. A. Vyakhirev and L. Ye. Reshetnikova (Ref 2) are mentioned in the paper. There are 3 figures, 4 tables, and 2 references, 1 of which is Soviet.

ASSOCIATION: Groznenskiy khimicheskiy zavod (Groznyy Chemical Plant).

Card 3/3

APPROVED FOR RELEASE: 06/14/2000 CIA-RDP86-00513R000824810009-9"

"APPROVED FOR RELEASE: 06/14/2000 CIA-RDP86-00513R000824810009-9

KOROL', A. N.

Cand Chem Sci - (diss) "Use of various variations of gas chromatrography for analysis of hydrocarbon gases and other products of the production of phenol, acetone, and synthetic alcohol." Kirovakan, 1961. 15 pp; with cover included; (Sovnarkhoz of the Checheno-Ingush Administrative Economic Rayon); 150 copies; price not given; (KL, 10-61 sup, 207)

APPROVED FOR RELEASE: 06/14/2000 CIA-RDP86-00513R000824810009-9"

"APPROVED FOR RELEASE: 06/14/2000 CIA-RDP86-00513R000824810009-9

KOROL', A.N.; TURKEL'TAUB, N.M.

Selection of a solvent for gas chromatography. Khim.i tekh.topl. i masel 6 no.6:61-66 Je '61. (MIRA 14:7)

1. Vsesoyuznyy nauchno-issledovatel'skiy geologorazvedochnyy neftyanoy institut.
(Gas chromatography)

APPROVED FOR RELEASE: 06/14/2000 CIA-RDP86-00513R000824810009-9"

"APPROVED FOR RELEASE: 06/14/2000 CIA-RDP86-00513R000824810009-9

KOROL', A.N.

Chromatographic analysis of the products of the manufacture of phenols from isopropylbenzene. Zav. lab. 27 no. 4:396-398 '61. (MIRA 14:4)

1. Groznenskiy khimicheskiy zavod.
(Phenols) (Cumene)

APPROVED FOR RELEASE: 06/14/2000 CIA-RDP86-00513R000824810009-9"

"APPROVED FOR RELEASE: 06/14/2000 CIA-RDP86-00513R000824810009-9

KOROL', A.N.; Prinimali uchastiye: ARUTYUNYAN, Z.; SHESHENIN, V.

Gas chromatography of lower fatty acids. Khim. i tekh. topl. i masel 8 no.7:62-64 Jl '63. (MIRA 16:7)

1. Nauchno-issledovatel'skiy institut avtomatizatsii proizvodstvennykh protsessov khimicheskoy promyshlennosti i tsvetnoy metallurgii.
(Acids, Fatty) (Gas chromatography)

APPROVED FOR RELEASE: 06/14/2000 CIA-RDP86-00513R000824810009-9"

"APPROVED FOR RELEASE: 06/14/2000 CIA-RDP86-00513R000824810009-9

SHESHENINA, G.G.; KOROL', A.N.

Amount of stationary liquid and the effectiveness of a filled column. Zhur. prikl. khim. 38 no.7:1624-1625 Jl '65. (MIRA 18:7)

APPROVED FOR RELEASE: 06/14/2000 CIA-RDP86-00513R000824810009-9"

"APPROVED FOR RELEASE: 06/14/2000 CIA-RDP86-00513R000824810009-9

KOROL', A.N. (Kiyev)

Solubility of polar aliphatic compounds. Zhur. fiz. khim. 39 no.3: 555-560 Mr '65. (MIRA 18:7)

1. Nauchno-issledovatel'skiy institut avtomatizatsii proizvodstvennykh protsessov khimicheskoy promyshlennosti i tsvetnoy metallurgii, Kirovakan.

APPROVED FOR RELEASE: 06/14/2000 CIA-RDP86-00513R000824810009-9"

"APPROVED FOR RELEASE: 06/14/2000 CIA-RDP86-00513R000824810009-9

KOROL', A.N.

Excess entropy of dissolution in gas chromatography. Zhur. fiz. khim. 39 no.4:886-889 Ap '65. (MIRA 19:1)

1. Nauchno-issledovatel'skiy institut avtomatizatsii proizvodstvennykh protsessov khimicheskoy promyshlennosti i tsvetnoy metallurgii, Kirovakan. Submitted Oct. 21, 1963.

APPROVED FOR RELEASE: 06/14/2000 CIA-RDP86-00513R000824810009-9"

"APPROVED FOR RELEASE: 06/14/2000 CIA-RDP86-00513R000824810009-9

KOROL', A.P.

Planchette Interpolator Meteorol. i gidrologiya, No 4, 1953, pp 54-57

The author describes an apparatus that enables one, with considerable economy of time, to carry out interpolation in the handling of aerological observation and in other similar computations. He presents two examples of computations with the aid of the planchette interpolator. On the basis of an experiment at the Kiev Wind Sounding Station (Kiyevskaya stantsiya vetrovogo zondirovaniya) the author recommends the planchette for operation at points of wind and temperature sounding of the atmosphere, and also in aerological divisions of observatories during control checking of data. (RZhGeol, No 5, 1954)

SO: Sum. No. 568, 6 Jul 55

APPROVED FOR RELEASE: 06/14/2000 CIA-RDP86-00513R000824810009-9"

"APPROVED FOR RELEASE: 06/14/2000 CIA-RDP86-00513R000824810009-9

KOROL', A.P. (Kiyev)

Diagnostic role of some focal and hypertensive symptoms in tumors of the temporal lobe. Vrach.delo no.5:481-484 My '57. (MLRA 10:8)

1. Nauchno-issledovatel'skiy institut neyrokhirurgii Ministerstva zdravookhraneniya USSR
(BRAIN--TUMORS) (HYPERTENSION)

APPROVED FOR RELEASE: 06/14/2000 CIA-RDP86-00513R000824810009-9"

"APPROVED FOR RELEASE: 06/14/2000 CIA-RDP86-00513R000824810009-9

KOROL', A.P. [Korol', O.P.]

Impairment of analysis and synthesis in cases of tumors of the temporal lobe with relation to the degree of intracranial pressure [with summary in English]. Fiziol.zhur. [Ukr] 4 no.4:543-550 Jl-Ag '58 (MIRA 11:10)

1. Kiyevskiy institut nevrokhirurgii, Kiyev.
(INTRACRANIAL TUMORS)
(SENSES AND SENSATIONS)

APPROVED FOR RELEASE: 06/14/2000 CIA-RDP86-00513R000824810009-9"

"APPROVED FOR RELEASE: 06/14/2000 CIA-RDP86-00513R000824810009-9

KOROL', A.P. (Kiyev)

Unconditioned salivation reactions in brain tumor cases. Vrach. delo no.11:1201-1203 N'58 (MIRA 12:1)

1. Nauchno-issledovatel'skiy institut neyrokhirurgii Ministerstva zdravookhraneniya USSR.
(SALIVARY GLANDS--SECRETIONS)
(BRAIN--TUMORS)

APPROVED FOR RELEASE: 06/14/2000 CIA-RDP86-00513R000824810009-9"

"APPROVED FOR RELEASE: 06/14/2000 CIA-RDP86-00513R000824810009-9

VIROZUB, I.D., KOROL', A.P.

Disorders of certain unconditioned reflex reactions in tumors of the posterior cranial fossa [with summary in French]. Zhur.nevr. i psikh. 58 no.5:550-554 '58 (MIRA 11:7)

1. Ukrainskiy nauchno-issledovatel'skiy institut neyrokhirurgii (dir. - prof. A.I. Arutyunov), Kiyev.
(REFLEXES,
unconditioned, in tumors of posterior cranial fossa (Rus))
(BRAIN NEOPLASMS, physiology
posterior cranial fossa, unconditioned reflex changes (Rus))

APPROVED FOR RELEASE: 06/14/2000 CIA-RDP86-00513R000824810009-9"

"APPROVED FOR RELEASE: 06/14/2000 CIA-RDP86-00513R000824810009-9

KOROL', A. P.: Master Med Sci (diss) -- "The relationship of certain focal and hypertonic symptoms in tumors of the temporal lobe". Kiev, 1959. 15 pp (Kiev State Order of Labor Red Banner Med Inst im Acad A. A. Bogomolets), 200 copies (KL, No 13, 1959, 111)

APPROVED FOR RELEASE: 06/14/2000 CIA-RDP86-00513R000824810009-9"

"APPROVED FOR RELEASE: 06/14/2000 CIA-RDP86-00513R000824810009-9

GLUSHKOVA, I.S.; KANYUKA, Yu.I.; KOPYAKOVSKIY, Yu.I.; KOROL', A.P.; LAPONOGOV, O.A.; YANOVSKIY, G.I.

Focal and general brain symptoms of supratentorial tumors of varying histostructure. Probl.neirokhir. 4:19-32 '59. (MIRA 13:11)
(BRAIN--TUMORS)

APPROVED FOR RELEASE: 06/14/2000 CIA-RDP86-00513R000824810009-9"

"APPROVED FOR RELEASE: 06/14/2000 CIA-RDP86-00513R000824810009-9

DZEVALTOVSKAYA, A.G.; KANYUKA, Yu.I.; KOROL', A.P.

Epileptic fits in brain tumors of varying histostructure. Probl. neirokhir. 4:85-90 '59. (MIRA 13:11)
(EPILEPSY)
(BRAIN--TUMORS)

APPROVED FOR RELEASE: 06/14/2000 CIA-RDP86-00513R000824810009-9"

"APPROVED FOR RELEASE: 06/14/2000 CIA-RDP86-00513R000824810009-9

KOHOL', A.P.

Relationship between certain focal and hypertensive symptoms in tumors of the temporal lobe. Zhur.nevr.i psikh. 59 no.9:1068-1071 '59. (MIRA 12:11)

1. Institut neyrokhirurgii (dir. - prof. A.I. Arutyunov) Ministerstva zdravookhraneniya USSR, Kiyev.
(TEMPORAL LOBE neoplasms)

APPROVED FOR RELEASE: 06/14/2000 CIA-RDP86-00513R000824810009-9"

"APPROVED FOR RELEASE: 06/14/2000 CIA-RDP86-00513R000824810009-9

KOROL', A.P.

Epileptic seizures in patients with intra- and extracerebral tumors of supratentorial localization. Vrach. delo no.8: 63-66 Ag'63. (MIRA 16:9)

1. Ukrainskiy nauchno-issledovatel'skiy institut neyrokhirurgii.

(EPILEPSY) (BRAIN—TUMORS)

APPROVED FOR RELEASE: 06/14/2000 CIA-RDP86-00513R000824810009-9"

"APPROVED FOR RELEASE: 06/14/2000 CIA-RDP86-00513R000824810009-9

MUSHEGYAN, A.M., prof., doktor biolog. nauk; SOKOLOV, S.Ya., prof., doktor biol. nauk, otv. red.; KOROL', A.Ya., red.; NAGIBIN, N., tekhn. red.

[Wild and introduces trees and shrubs of Kazakhstan] Derev'ia i kustarniki Kazakhstana, dikorastushchie i introdutsirovannye. Alma-Ata, Kazsel'khozgiz. Vol.1.[Gymnosperm families: Pinaceae-Ephedraceae. Angiosperm families: Salicaceae - Saxifragaceae] Golosemennye semeistva: Sosnovye-efedrovye. Pokrytosemennye semeistva: Ivovye-kamnelomkovye. 1962. 362 p. (MIRA 16:5)
(Kazakhstan--Woody plants)

APPROVED FOR RELEASE: 06/14/2000 CIA-RDP86-00513R000824810009-9"

"APPROVED FOR RELEASE: 06/14/2000 CIA-RDP86-00513R000824810009-9

KOROL', B.A., inzhener; ZADOROZHNAYA, T.A., inzhener.

Assembly line production of lasts. Leg.prom. 14 no.8:44-46 Ag '54.
(Shoe industry) (MLRA 7:8)

APPROVED FOR RELEASE: 06/14/2000 CIA-RDP86-00513R000824810009-9"

"APPROVED FOR RELEASE: 06/14/2000 CIA-RDP86-00513R000824810009-9

KOROL',B.A., glavnyy inzhener; ZADOROZHNAYA,T.A.

We need a new all-Union state standard for shoe lasts. Leg.prom.15 no.8:40-41 Ag '55. (MLRA 8:10)
(Shoe industry)

APPROVED FOR RELEASE: 06/14/2000 CIA-RDP86-00513R000824810009-9"

"APPROVED FOR RELEASE: 06/14/2000 CIA-RDP86-00513R000824810009-9

KOROL', B.A.; ZADOROZHNAYA, T.A.

Increase the output of extension-type lasts. Leg. prom. 18 no.9:50-53 S '58. (MIRA 11-10)
(Shoe manufacture)

APPROVED FOR RELEASE: 06/14/2000 CIA-RDP86-00513R000824810009-9"

"APPROVED FOR RELEASE: 06/14/2000 CIA-RDP86-00513R000824810009-9

KOROL', B.A.

Manufacture of heels from capron and ebonite. Kozh.-obuv.prom. 3 no.7:34-35 Jl '61. (MIRA 14:9)

1. Glavnyy inzh. Armavirskoy kolodochno-kabluchnoy fabriki.
(Shoe manufacture) (Nylon) (Rubber)

APPROVED FOR RELEASE: 06/14/2000 CIA-RDP86-00513R000824810009-9"

"APPROVED FOR RELEASE: 06/14/2000 CIA-RDP86-00513R000824810009-9

F KOROL, D.

C

CLEANING OF FINE COALS ON CONCENTRATING TABLES. Korol, D. (Biul. Inst. Nauk-Badaw. Przem. Wegl., 1948, Komin. 28, 27pp.).

Three coals of sizes 0-10 mm. were concentrated on Wilfley tables, in a Baum jig and in heavy liquids. The results confirmed that concentrating tables are suitable for fine coals, giving in some cases results equal to those with jigs, and that it is advisable to use them (1) in collieries where high-ash fines are associated with relatively clean coarse coal not normally cleaned, (2) for secondary concentration of middlings, (3) where the fines are difficult to clean by other methods and (4) where the pyrites content is high.

ASM-SLA METALLURGICAL LITERATURE CLASSIFICATION

APPROVED FOR RELEASE: 06/14/2000 CIA-RDP86-00513R000824810009-9"

"APPROVED FOR RELEASE: 06/14/2000 CIA-RDP86-00513R000824810009-9

KOROL, DIONIZY

2

Ferruginous sands and their dressing. Jan Kühl and Dionizy Korol. *Prace Głównego Inst. Górnictwa Ser. A, Komun.* No. 183, 16 pp.(1956)(English summary).—Sandy ores (Polish) consist of ferruginous quartz sands and lumps, limestone, and ferruginous silts. In the sands, quartz, orthoclase, microcline, albite, oligoclase, biotite, chlorite, halloysite, lepidocrocite, and limonite were found in gel form. The lumps consisted of quartz, feldspars, micas, chlorite, and limonite which underwent partial hematitization. The av. compn. of sands, lumps, and limestone together is SiO_2 59.05, Fe_2O_3 19.64, FeO 2.14, TiO_2 0.44, Al_2O_3 1.56, P_2O_5 0.44, MnO 0.87, CaO 4.60, MgO 1.25, Na_2O 0.32, K_2O 0.37, S 0.60, CO_2 4.60, H_2O 3.61, and org. 0.61%. The ferruginous silts contain 34.56% Fe_2O_3. Several methods for ore concn. are given. R. S. L.

APPROVED FOR RELEASE: 06/14/2000 CIA-RDP86-00513R000824810009-9"

"APPROVED FOR RELEASE: 06/14/2000 CIA-RDP86-00513R000824810009-9

KOROL, D.

Influence of hydraulic mining on mechanical preparation of coal. p.460
(PRZEGLAD GORNICZY, Vol. 12, No. 12, Dec. 1956, Stalinogrod, Poland)

SO: Monthly List of East European Accessions (EEAL) LC, Vol. 6, No. 9, Sept. 1957, Uncl.

APPROVED FOR RELEASE: 06/14/2000 CIA-RDP86-00513R000824810009-9"

"APPROVED FOR RELEASE: 06/14/2000 CIA-RDP86-00513R000824810009-9

KOROL,D.

Enriching the Polish sulfur ores. Biuletyn Glow. p.14
(PRZEGLAD GORNICZY, Vol. 12, No.5, May 1957, Stalinogrod, Poland)

SO: Monthly List of East European Accessions (EEAL) LC, Vol. 6, No. 9, Sept. 1957, Uncl.

APPROVED FOR RELEASE: 06/14/2000 CIA-RDP86-00513R000824810009-9"

"APPROVED FOR RELEASE: 06/14/2000 CIA-RDP86-00513R000824810009-9

POLAND/Chemical Technology. Chemical Products and Their Applications. Elements. Oxides. Mineral Acids. Bases. Salts. H

Abs Jour : Ref Zhur-Khimiya, No 6, 1959, 19982

Author : Korol, Dionizy
Inst : ~~Central Institute~~ of Mining.
Title : Enrichment of Rocks Containing Pyrite.

Orig Pub : Przegl. gorniczy, 1957, 13, No 1, Biul. Glown. inst. gotnictwa, 1-5

Abstract : Methods are described for enrichment of rocks containing pyrite (RP): limonites, siderites, dolomites - up to a S content which permits the use of RP in H_2SO_4 production. With an initial S content of 20-25 percent, concentrates are obtained which

Card : 1/2

H-19

APPROVED FOR RELEASE: 06/14/2000 CIA-RDP86-00513R000824810009-9

POLAND/Chemical Technology. Chemical Products and Their Application. Elements. Oxides. Mineral Acids. Bases. Salts. H-8

Abs Jour: Ref Zhur-Khim., No 2, 1959, 5243.

Author : Korol, Dionizy.
Inst : Main Institute of Mining.
Title : Dressing of Polish Ores of Native Sulfur.

Orig Pub: Przegl. gorniczy, 1957, 13, No 5, Biul. Glownego Inst. Gornictwa, 14-19.

Abstract: The results of work concerning the dressing of Polish sulfur ores (SOs) containing 20-30% S are discussed. Two methods were tested: settling under the action of gravitation and flotation. The higher is the degree of crushing, the more is crushed SO enriched in S in settlers. For example, concentrates (Cs) containing

Card : 1/3

"APPROVED FOR RELEASE: 06/14/2000 CIA-RDP86-00513R000824810009-9

KOBOL, Dionizy, prof.,mgr.,inz.

Mechanical cleansing processes in hydromechanization of mines.
Przegl gorn 17 no.12. Bulletin:31-36 '61.

APPROVED FOR RELEASE: 06/14/2000 CIA-RDP86-00513R000824810009-9"

"APPROVED FOR RELEASE: 06/14/2000 CIA-RDP86-00513R000824810009-9

BATTAGLIA, Dnrrzej, doc. dr inz.; KLICH, Piotr, mgr inz.;
KOROL, Dionizy, prof. mgr inz.

Development basis and trends of coal dressing in Poland.
Przegl gorn 19 no.4:148-157 Ap '63.

APPROVED FOR RELEASE: 06/14/2000 CIA-RDP86-00513R000824810009-9"

"APPROVED FOR RELEASE: 06/14/2000 CIA-RDP86-00513R000824810009-9

KOROLI[redacted]hener; LYUBIMOV, K., inzhener.

Decorative veneer for furniture. Prom.koop. no.5:17 My '57.
(MLRA 10:8)

1.Proyektno-konstruktorskoye byuro Rospromsoveta.
(Veneers and veneering)

APPROVED FOR RELEASE: 06/14/2000 CIA-RDP86-00513R000824810009-9"

KOROL[redacted], LYUBIMOV, K.N., inzhener

Preparing the cutting tool for curl veneers. Der. prom. 6 no.3: 20-21 Mr '57.
(MLRA 10:5)

1. Proyektno-konstruktorskoye byuro Rospromsoveta.
(Woodworking machinery) (Veneers and veneering)

"APPROVED FOR RELEASE: 06/14/2000 CIA-RDP86-00513R000824810009-9

L 15160-66 EWT(1)/EWT(m)/T/EWP(t)/EWP(b) IJP(c) JD/GG

ACC NR: AP6002025 SOURCE CODE: UR/0185/65/010/012/1322/1333

54
53
B

AUTHOR: Korol', E. M.

ORG: Kiev State University im. T. H. Shevchenko (Kyyivs'kyy derzhuniversytet)

21, 44, 55

TITLE: Investigation of long-wave oscillations of the lattice of ZnS-type crystals

SOURCE: Ukrayins'kyy fizychnyy zhurnal, v. 10, no. 12, 1965, 1322-1333

TOPIC TAGS: zinc sulfide, crystal lattice vibration, phonon scattering, acoustic speed, optic crystal

ABSTRACT: The dynamic theory of not completely polar crystals with a diamond lattice (III-V and II-VI compounds) is applied to the study of long-wave oscillations. The general dynamic equations are expanded in powers of the small wave vector up to and including quadratic terms. The static fields and the dipole potentials are replaced by dynamic ones which include the retardation of the Coulomb interaction. The obtained system of equations is solved by successive approximations. Optical oscillations in higher approximation are considered. The velocity of sound of acoustic phonons is found in the (100), (110), and (111) directions, as well as the elastic and piezo-elastic moduli of the

Card 1/2

APPROVED FOR RELEASE: 06/14/2000 CIA-RDP86-00513R000824810009-9"

"APPROVED FOR RELEASE: 06/14/2000 CIA-RDP86-00513R000824810009-9

L 15160-66

ACC NR: AP6002025

crystal. Expressions are obtained for the limiting frequencies in the case of optical oscillations. Unlike for purely ionic crystals, the longitudinal optical branch does not have the same limiting frequency as the transverse phonons. Scattering of carriers by optical phonons is also considered. All the results are expressed in terms of the parameters used in the theory and numerical estimates can only be made after these have been determined. Author thanks Professor K. B. Tolpyho (Tolpygo) for useful discussion of the work. Orig. art. has: 38 formulas

SUB CODE: 20/ SUBM DATE: 05Jan65/ ORIG REF: 010/ OTH REF: 002

Card 2/2 vmb

APPROVED FOR RELEASE: 06/14/2000 CIA-RDP86-00513R000824810009-9"

"APPROVED FOR RELEASE: 06/14/2000 CIA-RDP86-00513R000824810009-9

L 19160-63 EWT(1)/EWP(q)/EWT(m)/EWP(b)/BDS AFFTC/ASD/IJP(C) JD/JG
ACCESSION NR: AP3005326 S/0181/63/005/008/2193/2206

62
61

AUTHORS: Korol', E. N.; Tolpy*go, K. B.

TITLE: Dynamics of crystalline lattices of the type ZnS with fractional variable charges on the ions

SOURCE: Fizika tverdogo tela, v. 5, no. 8, 1963, 2193-2206

TOPIC TAGS: crystalline lattice, fractional charge, ion, Zn, S, In, Sb, potential energy, lattice vibration, valence electron, atom, homopolar crystal, adiabatic approximation, Sigma bond, electrical field, nucleus

ABSTRACT: An expression for potential energy and an equation for vibration of a ZnS-type lattice have been derived on the assumption that in equilibrium valence electrons are so disposed between atoms that each has a fractional average charge. The authors generalize the computations of potential energy (found in a number of papers) for ions and homopolar crystals on the basis of adiabatic approximation. It is stated that each pair of electrons connecting two neighboring atoms may belong, with a certain probability, to each atom or they may form a Sigma bond. When the nucleus is displaced, and also when there is an electrical field, these

Card 1/2

APPROVED FOR RELEASE: 06/14/2000 CIA-RDP86-00513R000824810009-9"

L 19160-63
ACCESSION NR: AP3005326

probabilities change, and this leads to a change in the average charge of the atoms. Orig. art. has: 43 formulas.

ASSOCIATION: Kiyevskiy gosudarstvenny*y universitet im. T. G. Shevchenko (Kiev State University)

SUBMITTED: 11Mar63 DATE ACQ: 06Sep63 ENCL: 00

SUB CODE: PH NO REF SOV: 012 OTHER: 002

Card 2/2

"APPROVED FOR RELEASE: 06/14/2000 CIA-RDP86-00513R000824810009-9

ACCESSION NR: AP4041352 S/0048/64/028/006/0942/0950

AUTHOR: Korol', E.N.; Tolpy*go, K.B.

TITLE: Dynamics of ZnS type crystal lattices with mixed ionic-covalent bonds and varying fractional ionic charges /Report, Third Conference on Semiconductor Compounds held in Kishinov 16 to 21 Sep 1963/

SOURCE: AN SSSR. Izvestiya. Seriya fizicheskaya, v.28, no.6, 1964, 942-950

TOPIC TAGS: crystal lattice, oscillation, chemical bond, zinc compound, lattice deformation

ABSTRACT: The vibration of a zinc sulfide type lattice with mixed ionic-covalent bonds is treated in the harmonic approximation with the variation with lattice deformation of the ionic charges and dipole moments taken into account. The potential energy of the lattice deformation is obtained by minimizing the expectation value of the Hamiltonian with respect to variations of the valence electron wave functions The valence electron wave functions are assumed to be appropriate superpositions of hybridized s and p orbitals of the anions and cations plus small correction terms that are determined by the minimizing process. The expectation value of the Hamil-

Card 1/3

APPROVED FOR RELEASE: 06/14/2000 CIA-RDP86-00513R000824810009-9"

"APPROVED FOR RELEASE: 06/14/2000 CIA-RDP86-00513R000824810009-9

ACCESSION NR: AP 4041352

tonian was calculated in an earlier paper (E.N.Korol' and K.B.Tolpy*go,Fiz.tverdogo tela 5,2193,1963), and the results of that paper are employed in the present calculation. The minimization of the average Hamiltonian with respect to the many parameters involved is performed in stages, and the final equations expressing the minimization of the Hamiltonian with respect to variations of the ionic charges and dipole moments and certain previously introduced Lagrange multipliers are treated as dynamical equations for the time dependence of the corresponding parameters, with which vanishing masses are associated. The enlarged set of dynamical equations is subjected to a Fourier transform with respect to space and time, and the equations for the Fourier components of the displacements, charges, and dipole moments are derived. To compare the theory with experiment it is necessary to know the values of 17 crystal parameters, of which experimental values are available for only 7, namely: three elastic moduli, one piezoelectric coefficient, two dielectric constants (for high and low frequency), and the dispersion frequency. The remaining 10 parameters could be evaluated by slow neutron scattering experiments which, however, have not yet been performed for crystals of the type discussed. Orig.art. has: 34 formulas.

Card 2/3

APPROVED FOR RELEASE: 06/14/2000 CIA-RDP86-00513R000824810009-9"

"APPROVED FOR RELEASE: 06/14/2000 CIA-RDP86-00513R000824810009-9

Characteristics of the dynamics of crystal lattices of the ZnS type for compounds with mixed ionic-valence bonding and varying atomic charges. K. B. Tolpygo, E. H. Korol' (15 minutes).

Relation of the electrical properties of Sb_2Se_3 with the crystallo-chemical composition and zone structure. A. S. Karpus, I. V. Batarunas (10 minutes).

Report presented at the 3rd National Conference on Semiconductor Compounds, Kishinev, 16-21 Sept 1963

APPROVED FOR RELEASE: 06/14/2000 CIA-RDP86-00513R000824810009-9"

"APPROVED FOR RELEASE: 06/14/2000 CIA-RDP86-00513R000824810009-9

KOROL', F.F.

During the first days of the war. Veterinariia 42 no.5: 15-16 My '65. (MIRA 18:6)

1. Kolkhoz imeni Gor'kogo Vasil'kovskogo rayona, Kiyevskoy oblasti.

APPROVED FOR RELEASE: 06/14/2000 CIA-RDP86-00513R000824810009-9"

"APPROVED FOR RELEASE: 06/14/2000 CIA-RDP86-00513R000824810009-9

KOROL', G., polkovnik; BELAN, V., podpolkovnik

Improve public control. Voen. vest. no.3:64-66 Mr'64.
(MIRA 17:5)

APPROVED FOR RELEASE: 06/14/2000 CIA-RDP86-00513R000824810009-9"

"APPROVED FOR RELEASE: 06/14/2000 CIA-RDP86-00513R000824810009-9

KOROL', Gabriel' A.

In small Czechoslovak town. Sov. foto 18 no.5:82 My '58.
(Tisnov, Czechoslovakia—Photography) (MIRA 11:5)

APPROVED FOR RELEASE: 06/14/2000 CIA-RDP86-00513R000824810009-9"

"APPROVED FOR RELEASE: 06/14/2000 CIA-RDP86-00513R000824810009-9

KOROL', G.S.

Physiological and biochemical study of some introduced plants in the southern part of the Lake Balkhash region. Trudy Alma-At. bot. sada 7:125-138 '63. (MIRA 16:10)

APPROVED FOR RELEASE: 06/14/2000 CIA-RDP86-00513R000824810009-9"

"APPROVED FOR RELEASE: 06/14/2000 CIA-RDP86-00513R000824810009-9

UVAROVA, Z.A.; KOROL', G.S.; ZYBENKO, L.D.; GERASIMENKO, G.

Effect of ammonium carbonate on certain physiological features in corn. Izv. AN Kazakh. SSR. Ser. bot. i pochv. no.1:52-56 '61. (MIRA 14:4)

(Ammonium carbonate—Physiological effect)
(Corn (Maize))

APPROVED FOR RELEASE: 06/14/2000 CIA-RDP86-00513R000824810009-9"

"APPROVED FOR RELEASE: 06/14/2000 CIA-RDP86-00513R000824810009-9

BEDENKO, V.P.; KOROLI, G.S.; SHOKOVA, R.I.

Physiological changes in the leaves of some plants in relation to their acclimatization in desert. Izv. AN Kazakh. SSR. Ser. biol. nauk 2 no.3:37-47 My-Je '64. (MIRA 17:10)

APPROVED FOR RELEASE: 06/14/2000 CIA-RDP86-00513R000824810009-9"

"APPROVED FOR RELEASE: 06/14/2000 CIA-RDP86-00513R000824810009-9

KOROL', G.Yu., polkovnik; KABANOV, S.Ye., podpolkovnik meditsinskoy sluzhby

Working toward a goal. Voen.-med.zhur. no.11:9-10 '64. (MIRA 18:5)

APPROVED FOR RELEASE: 06/14/2000 CIA-RDP86-00513R000824810009-9"

"APPROVED FOR RELEASE: 06/14/2000 CIA-RDP86-00513R000824810009-9

KOROL', I., kand.arkhitektury; SVITKO, V., arkhitektor

New plans for nursery schools. Sil'.bud. 9 no.5:6-9
My '59. (MIRA 13:3)
(Ukraine--Nursery schools)

APPROVED FOR RELEASE: 06/14/2000 CIA-RDP86-00513R000824810009-9"

"APPROVED FOR RELEASE: 06/14/2000 CIA-RDP86-00513R000824810009-9

KOROL', I.

Unnecessary organizations. Fin. SSSR. 22 no. 2:87-88 F '61.
(MIRA 14:2)

1. Nachal'nik otdela shtatov L'vovskogo gorfinotdela.
(Lvov—Industrial management)

APPROVED FOR RELEASE: 06/14/2000 CIA-RDP86-00513R000824810009-9"

"APPROVED FOR RELEASE: 06/14/2000 CIA-RDP86-00513R000824810009-9

KOROL', I.

Shortcomings in using a salary schedule for various occupations. Fin. SSSR 23 no.4:64 Ap '62. (MIRA 15:4)

1. Nachal'nik shtatnogo otdela L'vovskogo gorodskogo finansovogo otdela.

(Lvov--Wages)

APPROVED FOR RELEASE: 06/14/2000 CIA-RDP86-00513R000824810009-9"

"APPROVED FOR RELEASE: 06/14/2000 CIA-RDP86-00513R000824810009-9

KOROL', I.

Unnecessary departments. Fin.SSSR 37 no.3:73-74 Mr '63.
(MIRA 16:4)
1. Nachal'nik shtatnogo otdela L'vovskogo gorodskogo finansovogo otdela.
(Lvov Province--Railroads--Management)

APPROVED FOR RELEASE: 06/14/2000 CIA-RDP86-00513R000824810009-9"

"APPROVED FOR RELEASE: 06/14/2000 CIA-RDP86-00513R000824810009-9

KOROL', I.I.

Mental disorders in the treatment of lung tuberculosis patients with cycloserine. Zhur. nevr. i psikh. 64 no.10:1575-1577 '64. (MIRA 17:11)

1. Terapevticheskaya klinika (zaveduyushchiy - prof. M.A. Klebanov) Ukrainskogo nauchno-issledovatel'skogo instituta tuberkuleza i grudnoy khirurgii (direktor - dotsent A.S. Mamolat), Kiyev.

APPROVED FOR RELEASE: 06/14/2000 CIA-RDP86-00513R000824810009-9"

"APPROVED FOR RELEASE: 06/14/2000 CIA-RDP86-00513R000824810009-9

S/138/62/000/006/005/008
A051/A126

AUTHORS: Korol', I.P., Skrobot, V.S.

TITLE: Extrusion qualities and consistency of rubber mixes

PERIODICAL: Kauchuk i rezina, no. 6, 1962, 21 - 23

TEXT: The relation is established between the extrusion qualities of a rubber mix, i.e., the quality of its surface after the rubber mix has left the extruder, and its consistency (plasticity). No connection between these two factors was noted. An extrusion mechanism is recommended, based on the interaction between the adhesive force of the mix to the metal, and the cohesion force of the mix. A laboratory extruder with a 50.8 mm diameter screw conveyer was used to extrude the rubber mix in the shape of a square cable of 16 x 16 mm cross-section. The laboratory type extruder "Shpritsometr" (Fig. 1), also used to test surface extrusion qualities, is recommended for general laboratory use. Poor extrusion qualities of the СКИ(SKI) mixes containing channel carbon black, are explained by a poorer sliding motion of the latter along the walls of the instrument. It is shown that the extrusion qualities of the rubber mix surface depend on the rate of

Card 1/2

APPROVED FOR RELEASE: 06/14/2000 CIA-RDP86-00513R000824810009-9"

Extrusion qualities....

S/138/62/000/006/005/008
A051/A126

extrusion, and that any mix may show good surface extrusion qualities if the appropriate extrusion rate is chosen. There are 2 figures and 1 table.

ASSOCIATION: Vsesoyuznyy nauchno-issledovatel'skiy institut sinteticheskogo kauchuka im. S.V. Lebedeva (All-Union Scientific Research Institute of Synthetic Rubber im. S.V. Lebedev)

Fig. 1: Diagram of the extruder "Shpritsometr"

1- applied load, 2- indicator, registering the shift of the plunger, 3- plunger, 4- loading cylinder, 5- head of the extruder, 6- rubber mix, 7- thermostat, 8- outlet of the extruder head

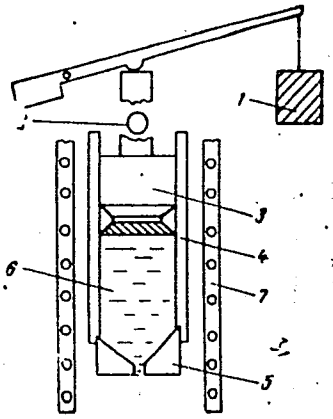

Card 2/2

"APPROVED FOR RELEASE: 06/14/2000 CIA-RDP86-00513R000824810009-9

KOROL', L.B.

Determining optimum shank length of BU-1 drill bits. Trudy TSNIIPodzemshktstroia no.3:91-96 '64. (MIRA 18:9)

APPROVED FOR RELEASE: 06/14/2000 CIA-RDP86-00513R000824810009-9"

"APPROVED FOR RELEASE: 06/14/2000 CIA-RDP86-00513R000824810009-9

FEDOTOV, Anton Nikolayevich. kand. tekhn. nauk; KOROL', Lev Borisovich, inzh.

[Rock drills on pneumatic supports; light boring rigs] Perforatory na pnevmopodderzhkakh; legkie burovye ustanovki. Moskva, Nedra, 1965. 219 p. (MIRA 18:9)

APPROVED FOR RELEASE: 06/14/2000 CIA-RDP86-00513R000824810009-9"

"APPROVED FOR RELEASE: 06/14/2000 CIA-RDP86-00513R000824810009-9

FEDOTOV, A.N., kand.tekhn.nauk; KOROL', L.B., inzh.

Blast holes should be bored using highly efficient light drill rigs. Shakht.stroi. no.11:8-10 N '59. (MIRA 13:3)

1. TSentral'nyy nauchno-issledovatel'skiy institut podzemshakhtostroy.
(Rock drills)

APPROVED FOR RELEASE: 06/14/2000 CIA-RDP86-00513R000824810009-9"

"APPROVED FOR RELEASE: 06/14/2000 CIA-RDP86-00513R000824810009-9

FEDOTOV, A.N., kand. tekhn. nauk; KOROL', L.B., inzh.

Choosing the parameters of a lightweight drilling rig. Shakht. stroi. 5 no.9:14-17 S '61. (MIRA 16:7)

1. Vsesoyuznyy institut nauchnoy i tekhnicheskoy informatsii Gosudarstvennogo komiteta Soveta Ministrov SSSR po koordinatsii nauchno-issledovatel'skikh rabot i AN SSSR (for Fedotov).
2. TSentral'nyy nauchno-issledovatel'skiy i proyektno-konstruktorskiy institut podzemnogo shakhtnogo stroitel'stva (for Korol').
(Boring machinery)

APPROVED FOR RELEASE: 06/14/2000 CIA-RDP86-00513R000824810009-9"

"APPROVED FOR RELEASE: 06/14/2000 CIA-RDP86-00513R000824810009-9

KOROL', L.B.

Increasing the efficiency of a perforator with a flap valve. Trudy TSNIIPodzemshakhtstroia no.1:178-189 '62. (MIRA 16:8)

(Rock drills--Testing)

APPROVED FOR RELEASE: 06/14/2000 CIA-RDP86-00513R000824810009-9"

"APPROVED FOR RELEASE: 06/14/2000 CIA-RDP86-00513R000824810009-9

SOV/77-4-2-15/18

Successes of Soviet Electrophotography; A Scientific and Technical Conference on Questions of Electrography

K.M. Vinogradov described some of the features of the cascade and liquid methods of electrophotographic development. Yu.Ye. Karpeshko devoted his report to the criterion of light sensitivity of the electrophotographic process. After the reports, a discussion took place on methods of determining the light sensitivity of electrophotographic layers. A.N. Chernyshev spoke on the prospects of developing polygraphic processes using electric and magnetic forces. O.V. Gromov (speaking also for I.I. Zhilevich, A.A. Sukhiy, V.A. Gordeyeva, A.S. Pauzha and Yu. I. Kevalaytis) reported on the development of electrophotographic reproducing equipment. A.S. Pauzha (speaking also for I.I. Zhilevich, A.S. Borisovich, M.M. Gal'vidiks and M.I.Mautkauskas) reported on the use of electrographic methods in recording oscillographs and other recording instruments. V.P. Yurchenko (speaking also for L.M. Balin) spoke on the possibility of electrophotographically recording images from electron-beam tubes. L.S. Korol' (speaking also for M.M. Markevich, T.I. Kozlovskaya, Ye. Kalinauskene, M.K. Maynens, I.I. Zhilevich and K.A. Montrimas) gave a detailed description of laboratory and machine methods of producing photosemiconductor papers (zinc oxide was used). A.A. Sukhiy (speaking also for I.I. Zhilevich, O.V. Gromov, V.A. Gordeyev , M.V. Fedotov and T.N. Ger) described a laboratory and industrial machine for producing photosemiconductor papers. T.A. Shishkina (speaking also for Ya.A. Okunun) reported on a method of examining electrophotographic materials using an a/c bridge. S.I. Khotyanovich (speaking also for A.V. Gikens and I.S. Shilevkens) spoke on developing materials for electrophotography and ferromagnitography, including developers giving a "reverse" image. B.I. Tikhonov reviewed methods of measuring the electrostatic potentials of electrophotographic layers, stressing that the oscillating electrode should not be placed above a layer with varying potential as this causes self-discharge. E.V. Krukovskis (speaking also for R.S. Gorevoy, A.V. Ozipov and Ye. S. Kheyfets) spoke on the practice of producing velveteen papers in an electrostatic field, and showed samples produced by the Grigishskaya paper factory. Ye.L. Nemirovskiy then gave a historical review of the development of electrographic methods in which he paid tribute to the work of the Scientific Research Institute of Electrography in Vil'nyus and the Institut poligraficheskogo mashinostroyeniya (Moskva)-(Polygraphic Machine Building Institute (Moscow)). Debates were then held

Card 6/10

APPROVED FOR RELEASE: 06/14/2000 CIA-RDP86-00513R000824810009-9"

KOROL, L. S.
p. 2

SOV/77-4-2-15/18

23(4) 23 (5)

AUTHOR: Lyalikov, K.S.

TITLE: Successes of Soviet Electrophotography (Uspekhi sovetskoy elektrofotografii) A Scientific and Technical Conference on Questions of Electrography (Nauchno-tekhnicheskaya konferentsiya po voprosam elektrografii)

PERIODICAL: Zhurnal nauchnoy i prikladnoy fotografii i kinematografii, 1959, Vol 4, Nr 2, pp 149-152 (USSR)

ABSTRACT: This is an account of a scientific and technical conference on electrography, the first to be held in the Soviet Union and evidently in the world. It was organized in Vil'nyus on December 16-19, 1958 by the Soviet narodnogo khozyaystva Litovskoy SSR (Council for National Economy of the Lithuanian SSR), the Gosudarstvennyy nauchno-tekhnicheskiy komitet Sovets ministrov Litovskoy SSR (State Scientific and Technical Committee of the Council of Ministers of the Lithuanian SSR) and the Nauchno-issledovatel'skiy institut elektrografii (Scientific Research Institute of Electrography). The conference, attended by over 300 scientific workers, was opened by the Deputy Chairman of the Council for National Economy of the Lithuanian SSR P.A. Kul'vets, after which the director of the Institute for Electrography, I.I.Zhilevich, reviewed the state and prospects for development of electrography in the USSR. He stated that research in this field should be carried out along the following lines: a) a search for new photo-active materials with high dark resistance; b) physical research into the internal photoeffect; c) development of photosemiconductor layers; d) development of the theory of the electrophotographic process. K.S. Lyalikov (speaking also for O.G. Popova) gave a report in which he suggested determining the light sensitivity of electrophotographic layers in GOST units. N.Z. Plavina (speaking also for I.I.Zhilevich, L.I.Kyun'ko, M.M.Markevich, E.I. Kalinauskene and O.M. Suveyzdis) reported on some research on the sensitization of a semiconductor in electrophotographic layers. V.M. Fridkin gave a report on highly sensitive electrophotographic layers and an electrophotocopying device, and reviewed the formation process of the latent electrophotographic image on the basis of the zonal theory. He also described the design of an electrosensitometer for determining sensitivity by the relaxation period of a charge on the surface of the layer, and the circuit of an electrophotographic copying device. Anfilov finished describing the latter and then spoke on the mechanics and kinetics of the development of the latent electrophotographic image in liquid developers.

Card 3/10

"APPROVED FOR RELEASE: 06/14/2000 CIA-RDP86-00513R000824810009-9

KOROL', M.I., dots., kand.istor.nauk

The Communist Party as the organizer of large-scale socialist agriculture in White Russia. Sbor.nauch.trud.BLTI no.10:30-44 '57. (MIRA 11:12)

(White Russia—Agriculture, Cooperative)
(Communist Party of the Soviet Union—Party work)

APPROVED FOR RELEASE: 06/14/2000 CIA-RDP86-00513R000824810009-9"

"APPROVED FOR RELEASE: 06/14/2000 CIA-RDP86-00513R000824810009-9

AYRAPETYAN, M.A. [deceased]; POPLEVIN, V.F.; KOROL', M.I.

Field experiments in water-gas injection. Trudy Inst. nefti AN Kazakh. SSR 4:117-134 '61. (MIRA 16:4)
(Oil reservoir engineering)

APPROVED FOR RELEASE: 06/14/2000 CIA-RDP86-00513R000824810009-9"

"APPROVED FOR RELEASE: 06/14/2000 CIA-RDP86-00513R000824810009-9

L 15627-65 EWP(e)/EWT(m)/EWP(b) Pq-4 ASD-3/AFFTC WH

ACCESSION NR: AR3010293 S/0081/63/000/012/0474/0474

SOURCE: RZh. Khimiya, Abs. 12M97

B

AUTHOR: Yermolenko, N. N.; Korol', M. S.

15

TITLE: Synthesis and study of some properties of phosphate glasses

CITED SOURCE: Sb. Steklo i silikatn. materialy*. Minsk, M-vo vy*ssh., sredn. i spets. prof. obrazovaniya BSSR, 1962, 139-144

TOPIC TAGS: phosphate glass, low melting, glass property

TRANSLATION: A series of low melting transparent glasses with an index of refraction from 1.547 to 1.767 which melt in the temperature interval 500-700° have been obtained in the $CaO-PbO-P_2O_5$ system. Crystalization capacity, light refraction, water resistance, density, and melting temperature of the glasses tested were studied.

SUB CODE: MT ENCL: 00

Card 1/1

APPROVED FOR RELEASE: 06/14/2000 CIA-RDP86-00513R000824810009-9"

"APPROVED FOR RELEASE: 06/14/2000 CIA-RDP86-00513R000824810009-9

OGORODNIKOV, S.K.; KOROL', N.G.; RABOVSKAYA, R.V.

Liquid - vapor and liquid - liquid equilibrium in the binary systems formed by some perfluoroorganic compounds and C_5 and C_6 hydrocarbons. Zhur. prikl. khim. 37 no.8:1786-1790 Ag '64. (MIRA 17:11)

APPROVED FOR RELEASE: 06/14/2000 CIA-RDP86-00513R000824810009-9"

"APPROVED FOR RELEASE: 06/14/2000 CIA-RDP86-00513R000824810009-9

OROGORNIKOV, S.K.; RABOVSKAYA, R.V.; KOROL', N.G.; PRESMAN, B.I.

Azeotropy in binary systems formed by perfluorotriethylamine and C_5 and C_6 hydrocarbons. Zhur.prikl.khim. 37 no.7:1597-1601 Jl '64. (MIRA 18:4)

APPROVED FOR RELEASE: 06/14/2000 CIA-RDP86-00513R000824810009-9"

"APPROVED FOR RELEASE: 06/14/2000 CIA-RDP86-00513R000824810009-9

KOROL', Nikolay Stepanovich; KIFORENKO, I[Kyforenko, I.], red.; GORKAVENKO, A. [Horkavenko, A.], tekhn. red.

[Future development of the collective farm system and property relations]Dal'shyi rozvytok kolhospnoho ladu i vidnosyn vlasnosti. Kyiv, Derzh.vyd-vo polit.lit-ry URSR, 1961. 66 p. (MIRA 16:2)

(Collective farms)

APPROVED FOR RELEASE: 06/14/2000 CIA-RDP86-00513R000824810009-9"

"APPROVED FOR RELEASE: 06/14/2000 CIA-RDP86-00513R000824810009-9

GALYANT, I.M., inzh.; KOROL', N.T., tekhnik

Redesigning of a water pumping station and repair of the water intake. Energetik 8 no.8:17-19 Ag '60. (MIRA 13:10)
(Pumping stations)

APPROVED FOR RELEASE: 06/14/2000 CIA-RDP86-00513R000824810009-9"

"APPROVED FOR RELEASE: 06/14/2000 CIA-RDP86-00513R000824810009-9

KOROL', N.Ye.

MEL'NIKOV, N.V., redaktor; KOROL' N.Ye., redaktor; KOROVENKOVA, Z.A., tekhnicheskiy redaktor.

[Improving open-cut mining of mineral deposits; (transactions of a conference held in Moscow November 17-22, 1954)] Sovershenstvovanie otkrytoi razrabotki mestorozhdenii poleznykh iskopaemykh (po materialam soveshchaniia, sostoiavshegosia v Moskve 17-22 noiabria 1954 g.) Pod red. N.V. Mel'nikova. Moskva, Ugletekhizdat, 1955. 470 p. (MLRA 9:4)

1.Vsesoiuzn. nauchn. inzhenerno-tekhnicheskoye gornoye obshchestvo.
2.Chlen-korrespondent Akademii nauk SSSR (for Mel'nikov).
(Mining engineering) (Strip mining)

APPROVED FOR RELEASE: 06/14/2000 CIA-RDP86-00513R000824810009-9"

"APPROVED FOR RELEASE: 06/14/2000 CIA-RDP86-00513R000824810009-9

KOROL', O., inzh.

Fattening center for 900 heads of cattle. Sil'.bud. 9 no.11: 13 N '59. (MIRA 13:4)

1. Tavrovskaya [Tivrive'kaya] raysel'khozinspektsiya po arkhitekurno- stroitel'nomu kontrolyu Vinnitskoy oblasti.
(Tyvrov District--Beef cattle)

APPROVED FOR RELEASE: 06/14/2000 CIA-RDP86-00513R000824810009-9"

"APPROVED FOR RELEASE: 06/14/2000 CIA-RDP86-00513R000824810009-9

IVANCHENKO, A.M.; KOVAN'KO, N.M.; KOROL', G.A.

Unit for measuring the de-excitation time of scintillators.
Izv. tekh. no.4:51-52 Ap '65. (MIRA 18:7)

APPROVED FOR RELEASE: 06/14/2000 CIA-RDP86-00513R000824810009-9"

"APPROVED FOR RELEASE: 06/14/2000 CIA-RDP86-00513R000824810009-9

IVANCHENKO, A.M.; KOVAN'KO, N.M.; KOROL', O.G.

Nonoverloading amplifier for analyzers and pulse counters.
Prib. i tekh.eksp. 6 no.4:155 Jl-Ag '61. (MIRA 14:9)

1. Khar'kovskiy filial Vsesoyuznogo nauchno-issledovatel'skogo instituta khimicheskikh reaktivov.
(Amplifiers (Electronics))

APPROVED FOR RELEASE: 06/14/2000 CIA-RDP86-00513R000824810009-9"

"APPROVED FOR RELEASE: 06/14/2000 CIA-RDP86-00513R000824810009-9

L 43721-66 EWT(d)/EWT(m)/EWP(k)/EWP(h)/EWP(e)/EWP(v)/T/EWP(t)/ETI/EWP(1) IJP(c)
ACC NR: AP6030442 SOURCE CODE: UR/0420/66/000/006/0113/0115
JD/HW

AUTHOR: Korol', O. G.

ORG: none

TITLE: Electron-beam heating of metal

SOURCE: Samoletostroyeniye i tekhnika vozdushnogo flota, no. 6, 1966, 113-115

TOPIC TAGS: electron beam, electron beam heating, metal sheet heating, electron beam heating unit, METAL FORMING

ABSTRACT: An electron-beam unit for heating and forming metal sheets has been designed and built (see Fig. 1). The unit consists of electron gun 1, focusing system 2, conical diaphragms separating high- and low-vacuum parts 3, vacuum pumps 4, 5, 6, deflection system 1, vacuum safety valve 8, valve drive 9, vacuum sensor 10 and punch 12. The end of the unit housing forms the female die for sheet blank 11. The location of diaphragms and pumps makes it possible to maintain a vacuum of $5 \cdot 10^{-5}$ in the electron gun area even with an open low-vacuum area. The electron gun is equipped with a lanthanum-boride cathode and produces a beam with a current up to 150 mamp at an accelerating voltage of 10—15 kv. The unit heated in 7 sec.

Card 1/2

Card 2/2 hs

APPROVED FOR RELEASE: 06/14/2000 CIA-RDP86-00513R000824810009-9

"APPROVED FOR RELEASE: 06/14/2000 CIA-RDP86-00513R000824810009-9

L 42970-66 EWT(m)/EWP(j)/EWP(t)/ETI IJP(c) JD/RM

ACC NR: AR6024991 SOURCE CODE: UR/0081/66/000/007/H119/H119

40
B

AUTHOR: Krasil'nikova, Ye. A.; Korol', O. I.; Razumov, A. I.

TITLE: Studies in the series of derivatives of phosphonous and phosphonic acids. Report No. 31. Reactions of thioesters of alkylphosphonous acids with alkyl halides

27

SOURCE: Ref. zh. Khimiya, Part I, Abs. 7Zh391

REF SOURCE: Tr. Kazansk. khim.-tekhnol. in-ta, vyp. 33, 1964, 171-180

TOPIC TAGS: organic sulfur compound, organic phosphorus compound, alkyl halide

ABSTRACT: The reaction of $RP(SR)_2$ (I; always $R=C_2H_5$) with R'X produced the adducts $[RR'P(SR)_2]X$ (II), which on heating convert into RR'P(S)SR (III), and in many cases into RR'_2PS (IV) (a few). Thermal decomposition of II in the presence of R'X produces III and IV in about the same proportions. These results do not confirm a proposed mechanism of the reaction of I with R'X with detachment of RSBr from II (RZhKhim, 1958, No. 8, 25246). To 50 g of I in a CO_2 atmosphere is added 38.9 g of CH_3I at 22°, after ~16 hr the crystals of II (R = CH_3, X = I) (IIa) are washed with ether, and III, 74% ($R'=CH_3$) (IIIa) is separated from the liquid part (here and further on, the yield in % is given with the substance). 30 g IIa is carefully melted, Ri, 92 is driven off, and IIIa, 77 is separated. 20 g I and 11 g CH_3Br at -10° are sealed into a tube, and 2 days later (at 20-22°) II is removed (R'=Me, X Br), and IIIa, 72 is isolated. 20 g I and 10.77 g RBr are heated in a tube for 4 hours at 140-150°, and crystals of R_3PS,

Card 1/2

L 42970-66

ACC NR: AR6024991

APPROVED FOR RELEASE: 06/14/2000 CIA-RDP86-00513R000824810009-9"

8 are removed; III ($R'=C_2H_5$), 65 and $RP(S)(SR)_2$ (V), 4.5 are separated from the filtrate. R', X, the yield in %, m. p. in °C are given for II: CH_3, Br, 5, 66-7; CH_3, I, 35, 67-8; $C_6H_5CH_2$, Br (IIb), 40, 75-6; $C_6H_5CH_2$, I, 44, 79-80.5; $[(CH_3)RP(SC_4H_9)_2]I$, 19, 59-60.5. R', the yield in %, m. p. in °C/mm, $n^{20}D$, d_4^{20} are given for III: CH_3, 76, 64-6/0.03, 1.5650, 1.0978; C_2H_5, -, 74-5/0.25, 1.5585, 1.0878; C_3H_7, 55, 77-80/0.1, 1.5515, 1.0721; C_3H_5, 88, 85-6/0.05, 1.5675, 1.0774; V, 88-90/0.28, 1.5870, 1.1326; $RP(SC_4H_9)_2$: -, 69, 114-5/0.02, 1.5275, 0.9726; $RP(S)(SC_4H_9)_2$: -, 53, 122-4/0.02, 1.5560, 1.0560; $RP(Se)(SC_4H_9)_2$: -, 53, 128-30/0.02, 1.5772, 1.2160; $R(CH_3)P(S)SC_4H_9$: -, 50.76-7/0.02, 1.5445, 1.0398; $R(C_6H_5CH_2)P(S)SC_4H_9$: -, 20, 127-30/0.05, 1.5820, 1.0878; $RP(Se)(SR)_2$: -, 80, 108-9/0.4, 1.6175, 1.3584. 13 g IIb is heated at 75°, yield of RBr 75%, distillation of residue isolates III ($R'=C_6H_5CH_2$) (IIIb), 70, and in the residue IV ($R'=C_6H_5CH_2$) (IVb), 3.6 remains. A mixture of 9 g IIb and 4.4 g $C_6H_5CH_2Br$ is heated for 1 hr at 105°, and RBr, 86.6, $C_6H_5CH_2Br$, 68, IIIb, 86, and IVb, 3.2, are separated. The reaction of 41 g $C_6H_5P(SR)_2$ with 30.48 g $C_6H_5CH_2Br$ yields $(C_6H_5)C_6H_5CH_2P(S)SR$, 37 and $C_6H_5(C_6H_5CH_2)_2PS$, yield 3.5%, m. p. 146-7°. For Report No. 30, see Abs. 7Zh399. V. Gilyarov. [Translation of abstract]

SUB CODE: 07

Card 2/2