"APPROVED FOR RELEASE: 06/20/2000 CIA-RDP86-00513R000930310018-6

Ca

10

Sulfanilamide from diphenylurea. G. T. Brar, M. N. Lizgunova, and A. A. Chemerisskaya. *J. Applied Chem.* (U.S.S.R.) 19, 379-84(1946).—Because of shortage of AcOH in U.S.S.R. particularly during the war, alternate methods for the synthesis of sulfa drugs had to be devised to eliminate the need for AcNHPh and related Ac derivs. In the present work such an attempt through the use of $CO(NHPh)_2$ is described. $ClSO_3H$ (1240 g., 91.6%, d. 1.74) was treated with stirring at 15–20° with 440 g. 96.5% $CO(NHPh)_2$, and heated 2 hrs. to 58–60°, yielding a soln. contg. 22.9% *bis(4-sulfonyl chloride) deriv.* (78.9% yield); when 75 cc. of this soln. is treated with 200 g. ice and 150 cc. water there is obtained a semicolloidal paste of the bis(sulfonyl chloride) deriv., which can be filtered only with mild suction; extn. of the paste with hot Me_2CO yields the pure compd., m. 207–11°, while boiling the paste 0.5 hr. with an equal wt. of water yields sulfanilic acid. The paste (calcd. to contain 32.3 g. bis(sulfonyl chloride)) was added rapidly below 30° to 45 cc. 22% NH_4OH and 55 cc. water with good agitation, then stirred for 2 hrs., filtered, and washed with hot water, yielding 130–160 g. of paste of *4,4'-diphenylureadisulfonamide*, which contained about 26 g. of the pure compd.; for purification, 10 g. of the crude product in 80 cc. warm pyridine was decolorized and treated with 160 cc. hot water, yielding the pure product, m. 273–8° (4.5 g.). For purification of larger amts. it is more practicable to dissolve the crude product in 12% NaOH and ppt. by HCl after decolorization. The product has been shown to have beneficial effects in child dysentery and gonorrhea with a min. of secondary reactions. The product may be readily hydrolyzed to *sulfanilamide* either by refluxing 6 hrs. with 12% NaOH or autoclaving 7 hrs. at 140–5° with 4.5% NH_4OH with an over-all yield of 45–50% from diphenylurea. G. M. K.

APPROVED FOR RELEASE: 06/20/2000 CIA-RDP86-00513R000930310018-6"

"APPROVED FOR RELEASE: 06/20/2000 CIA-RDP86-00513R000930310018-6

ca

10

Preparation of 6-methoxy-4-(4-diethylamino-1-methylbutylamino)quinoline. M. V. Rubtsov, M. V. Luzgunova, and E. D. Sazonova (All Union Chem. Pharm. Research Inst., Moscow). *J. Gen. Chem.* (U.S.S.R.) 16, 1873-6 (1946).—Two methods were explored for the synthesis of the 4-isomer of plasmochin. 6-Methoxy-4-chloroquinoline-HCl (17.3 g.) and 34 g. freshly distd. PhOH, heated to gentle boiling 0.5 hr., cooled to 100°, and poured into 150 cc. 10% NaOH, yielded 82%, *6-methoxy-4-phenoxyquinoline*, m. 89-91° (crude), m. 91.5° (from EtOH). This (15 g.) and 40 g. $H_2NCHMe(CH_2)_3NEt_2$ (I), heated to gentle reflux 6 hrs., steam-distd. and the residual oil mixed with 50 cc. 5% AcOH, yielded 4 g. starting material (insol.) and the AcOH soln. with KOH gave 1.1 g. *6-methoxy-4-(4-diethylamino-1-methylbutylamino)quinoline* (II), m. 127.5° (from Me_2CO). 6-Methoxy-4-bromoquinoline (70 g.) and 700 cc. 40% $NaHSO_3$, boiled until soln. took place (about 2.5 hrs.) and cooled, yielded *Na 6-methoxy-4-quinolinesulfonate*, which was dissolved in 700 cc. warm H_2O, filtered, and acidified to Congo red with HCl; after standing for 10-12 hrs., 81%, *6-methoxy-4-quinolinesulfonic acid*, m. 291°, was obtained. This (94 g.), 132 g. I, and 132 g. H_2O, heated to 140° 22 hrs., treated with 132 cc. H_2O, cooled to 40°, and the org. layer sepd. and steam-distd., yielded a residue of crude II, which, taken up in 1:10 HCl, stirred with charcoal, filtered, and treated with NH_4OH, gave 50% II, m. 124-5°; crystn. from Me_2CO gives pure II, m. 128°. Conversion of II to the *HCl salt* is best done in dry Me_2CO by addn. of the theoretical amt. of alc. HCl; yield 89%, m. 147-50°. G. M. Kosolapoff

ASB-SLA METALLURGICAL LITERATURE CLASSIFICATION

APPROVED FOR RELEASE: 06/20/2000 CIA-RDP86-00513R000930310018-6"

"APPROVED FOR RELEASE: 06/20/2000 CIA-RDP86-00513R000930310018-6

Lizgunova, T.V.

USSR/General Division. History. Classics. Personalities. A-2

Abs Jour : Ref Zhur-Biologiya, No 2, 1958,4648

Author : D. D. Brezhnev, A. I. Ivanovskiy, T. V. Lizgunova and Others

Inst :

Title : In Memory of V. L. Vasil'yev

Orig Pub : Sad i ogorod, 1957, No 5, 75

Abstract : Obituary of Vasiliy Luk'yanovich Vasil'yev, one of the oldest vegetable growers in the country (1884-1957) who had worked on problems of vegetable growing, variety of vegetable crops, and vegetable seeds. A number of works by Vasil'yev were devoted to problems on vegetable growing in the far North

Card 1/1

APPROVED FOR RELEASE: 06/20/2000 CIA-RDP86-00513R000930310018-6"

"APPROVED FOR RELEASE: 06/20/2000 CIA-RDP86-00513R000930310018-6

M-3

USSR/Cultivated Plants - Potatoes. Vegetables. Melons.

Abs Jour : Ref Zhur - Biol., No 7, 1958, 29800

Author : Lizgunova, T.V., Fedulova, A.P.

Inst : All-Union Plant Cultivation Institute.

Title : Vernalizing Cabbage in the Seed.

Orig Pub : Tr. po prikl. botan., genet. i slektsii, 1957, 31, No 2, 88-103.

Abstract : Thirty nine specimens of cabbage of diverse geographical origin were studied at the Pushkin Laboratories of the All-Union Plant Cultivation Institute in 1953-1955; all were related to annual and biennial forms of the following Brassica species: B. capitata, B. sabauda, B. gennifera, B. subspontanea, B. caulorapa, B. cauliflora. Vernalization was performed at 0-1° for 20, 40, 60 and 90 days. The short-staged varieties (in the vernalization stage)

Card 1/2

APPROVED FOR RELEASE: 06/20/2000 CIA-RDP86-00513R000930310018-6"

"APPROVED FOR RELEASE: 06/20/2000 CIA-RDP86-00513R000930310018-6

LIZGUNOVA, T.V., kand.sel'skokhoz.nauk

History of the botanical investigation of cabbage (Brassica oleracea L.). Trudy po prikl. bot., gen. i sel. 32 no.3:37-70 '59.
(MIRA 14:5)

(Cabbage)

APPROVED FOR RELEASE: 06/20/2000 CIA-RDP86-00513R000930310018-6"

"APPROVED FOR RELEASE: 06/20/2000 CIA-RDP86-00513R000930310018-6

S/661/61/000/006/037/081
D202/D302

AUTHORS: Gornets, L. V. and Lizgunova, T. Z.

TITLE: Increase of the oxidation resistance of liquid polyethylsiloxanes

SOURCE: Khimiya i prakticheskoye primeneniye kremneorganicheskikh soyedineniy; trudy konferentsii. no. 6: Doklady, diskussii, resheniye. II Vses. konfer. po khimii i prakt. prim. kremneorg. soyed., Len., 1958. Leningrad, Izd-vo AN SSSR, 1961 172-175

TEXT: A discussion on a previously published report (no. 2, p. 28, this publication), in which L. V. Gornets, K. A. Andrianiv (Moscow), I. A. Zubkov (Moscow), M. L. Alashkevich and T. A. Krasovskaya (Moscow) took part. Effects of inhibitors used by the authors and their method for determining the thermal stability of the above-mentioned compounds were discussed. The opponents, Andrianov and Alashkevich, stated that viscosity determinations alone, as used

Card 1/2

APPROVED FOR RELEASE: 06/20/2000 CIA-RDP86-00513R000930310018-6"

"APPROVED FOR RELEASE: 06/20/2000 CIA-RDP86-00513R000930310018-6

S/661/61/000/006/037/081
D202/D302

Increase of the oxidation ...

by the authors, are inadequate for study of thermal stability of siloxanes. In the authors' opinion, however, the method is sufficiently accurate for technological purposes.

Card 2/2

APPROVED FOR RELEASE: 06/20/2000 CIA-RDP86-00513R000930310018-6"

"APPROVED FOR RELEASE: 06/20/2000 CIA-RDP86-00513R000930310018-6

ACC NR: AP6005613 SOURCE CODE: UR/0233/65/000/003/0108/0115

AUTHOR: Abrosimov, I.L.; Aleskerov, S. A.; Lizhdvoy, G. L.

ORG: none

TITLE: Tunnel-diode storage element

SOURCE: AN AzerbSSR. Izvestiya. Seriya fiziko-tekhnicheskikh i matematicheskikh nauk, no. 3, 1965, 108-115

TOPIC TAGS: tunnel diode, computer storage device, memory

ABSTRACT: A well-known (P. M. Thompson, "Industrial Electronics", 1963, v. 1, no. 6) tunnel-diode storage element (see figure) is considered. The circuit comprises tunnel diode T, bias resistor R_0, and decoupling point-contact diode D. Bias U_0 and resistor R_0 determine

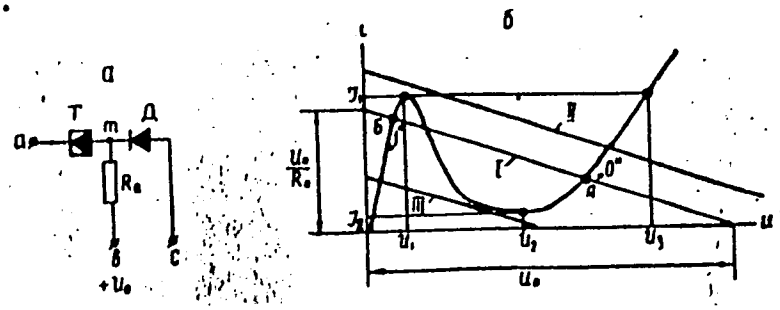

Card 1/2

APPROVED FOR RELEASE: 06/20/2000 CIA-RDP86-00513R000930310018-6"

"APPROVED FOR RELEASE: 06/20/2000 CIA-RDP86-00513R000930310018-6

L 39532-66

ACC NR: AP6005613

the position of the load line I where the element has two stable states (0, 1). Static conditions of the element are analyzed, tolerances of parameters are considered, and a formula for the output voltage is developed. These experimental results are reported: a Ge-tunnel-diode storage element developed a 200-mv 30-nsec pulse on a 200-ohm resistor (diode parameters: I_1 = 5.2 ma ± 15%; I_2 = 0.9 ma ± 20%; U_1 = 45 mv; U_2 = 245 mv; U_3 = 405 mv; C = 50 pF; decoupling diode: Ge, D10 type). A GaAs-tunnel-diode storage element developed a 450-mv 30-nsec pulse on a 200-ohm resistor (diode parameters: I_1 = 10.5 ma; I_2 = 0.8 ma; U_1 = 105 mv; U_2 = 550 mv; U_3 = 1.12 v; C = 7 pF). Orig. art. has: 4 figures and 30 formulas.

SUB CODE: 09 / SUBM DATE: 28Dec64 / ORIG REF: 003 / OTH REF: 002

Card 2/2 vmb

APPROVED FOR RELEASE: 06/20/2000 CIA-RDP86-00513R000930310018-6"

"APPROVED FOR RELEASE: 06/20/2000 CIA-RDP86-00513R000930310018-6

LIZHDVOY, K. Ya.: Master Tech Sci (diss) -- "Experimental investigation of a generator of an unslowed reverse wave with transverse interaction". Kiev, 1958. 13 pp (Min Higher Educ USSR, Kiev Order of Lenin Polytech Inst), (KL, No 7, 1959, 125)

APPROVED FOR RELEASE: 06/20/2000 CIA-RDP86-00513R000930310018-6"

"APPROVED FOR RELEASE: 06/20/2000 CIA-RDP86-00513R000930310018-6

SOV/109-4-1-15/30

AUTHOR: Lizhdvoy, K.Ya.

TITLE: De-focusing of a Planar Cycloidal Electron Beam by the Action of Space-charge Forces (Rasfokusirovka ploskotsikloidal'nogo elektronnogo puchka pod deystviyem sil prostranstvennogo zaryada)

PERIODICAL: Radiotekhnika i Elektronika, 1959, Vol 4, Nr 1, pp 120 - 125 (USSR)

ABSTRACT: An electron beam in a system of crossed electric and magnetic fields is considered. The system is illustrated in Figure 1, where 1 and 2 are two conducting planes, one of which is at a potential $U_o = bE_o$. The cathode of the system has a width δ and is at the same potential as the lower plate. The upper boundary of the beam is y_m. A uniform magnetic field is perpendicular to the plane YZ. The width of the beam is d, such that $b \ll d$ (see Figure 2). If the space charge is neglected, the trajectories of the electrons can be described by:

Card1/4

APPROVED FOR RELEASE: 06/20/2000 CIA-RDP86-00513R000930310018-6"

"APPROVED FOR RELEASE: 06/20/2000 CIA-RDP86-00513R000930310018-6

SOV/109-4-1-15/30

De-focusing of a Planar Cycloidal Electron Beam by the Action of Space-charge Forces

$$y = \frac{a}{\Omega^2}(1 - \cos \Omega t), \qquad z = \frac{a}{\Omega^2}(\Omega t - \sin \Omega t),$$
$$a = \frac{e}{m} E_o, \qquad \Omega = \frac{e}{m} B, \tag{1}$$

where B is the magnetic field and E_o is the electric field. It is assumed that the density of the space charge along the axis Z is constant. The problem then consists of determining the electric field component E_x at a distance $x = d/2$ in a two-dimensional co-ordinate system XY. It is shown that E_x can be determined from Eqs (2) where constants A_k and B_k can be determined from the boundary conditions at $x = 0$ and $x = d/2$. Consequently, E_x for $x \ll d/2$ is given by Eq (6) and for $x = d/2$ it is expressed by Eq (7). The space charge parameter in these

Card2/4

APPROVED FOR RELEASE: 06/20/2000 CIA-RDP86-00513R000930310018-6"

"APPROVED FOR RELEASE: 06/20/2000 CIA-RDP86-00513R000930310018-6

equations can be found from Eqs (9) or (10). Consequently, E_x is expressed by Eq (11) or by Eq (12). The widening of the electron beam can be determined by solving the equation of motion, which is in the form of Eq (13) or (14). The widening of the beam Δx is expressed by Eq (15) where $\gamma = \Omega t$. From Eq (14) it is also found that the velocity component due to the direct component of the electric field E_x is expressed by Eq (16) where F_3 is given by Eq (17). The electron velocity component due to the alternating part of E_x is expressed by Eq (18) where F_1 and F_2 are given by Eqs (19) and (20), respectively. Graphs of functions F_1, F_2, and F_3 are given in Figure 3. The electric field E_x can be expressed as a function of F_4 which is defined by Eq 23. Graphs of F_4 as a function of y/b are shown in Figure 5.

APPROVED FOR RELEASE: 06/20/2000 CIA-RDP86-00513R000930310018-6"

"APPROVED FOR RELEASE: 06/20/2000 CIA-RDP86-00513R000930310018-6

SOV/109-4-1-15/30

De-focusing of a Planar Cycloidal Electron Beam by the Action of Space-charge Forces

There are 5 figures and 2 Soviet references

SUBMITTED: March 26, 1957

Card 4/4

APPROVED FOR RELEASE: 06/20/2000 CIA-RDP86-00513R000930310018-6"

"APPROVED FOR RELEASE: 06/20/2000 CIA-RDP86-00513R000930310018-6

SOV/109-59-4-2-8/27

AUTHOR: Lizhdvoy, K.Ya.

TITLE: Experimental Investigation of a Non-Slowed Backward-Wave Oscillator (Eksperimental'noye issledovaniye generatora nezamedlennoy obratnoy volny)

PERIODICAL: Radiotekhnika i Elektronika, 1959, Vol 4, Nr 2, pp 212-217 (USSR)

ABSTRACT: The principle of the oscillator described is based on the fact that it is possible (in an electron beam) to excite a wave whose phase velocity is equal to the velocity of light and whose direction is opposite to that of the velocity of the particles (Ref 2, 3 and 4). The experimental tube was in the form shown in Fig 1. It consisted of two strips having a cross section 4 x 15 mm^2 which formed the interaction space. A voltage U_0 was applied between the strips; this produced an electric field E_0. The upper part of one of the strips contained a cathode 3. The two-conductor line formed by the two strips was taper-transformed into a line consisting of two cylindrical conductors; these were sealed to the glass of the tube by means of molybdenum tubes 4. The collector of the tube, which

Card 1/4

APPROVED FOR RELEASE: 06/20/2000 CIA-RDP86-00513R000930310018-6"

"APPROVED FOR RELEASE: 06/20/2000 CIA-RDP86-00513R000930310018-6

catches the electrons, consisted of two plates 7 and 8. A magnetic field B was applied to the system over a region ab (see Fig 1). The magnetic field gradually decreased in the gap between the collector and the strips, so that at a distance of about 4 cm from the gap it was about seven times weaker than in the interaction space. The plate 7 had the same potential as the cathode strip, while the plate 8 had the potential of the strip 1. At the collector end, the strips were loaded with a resistance 9. The theory of this type of oscillator is given in Ref 1 and 5. The theory states that the power generated by the oscillator is given by:

$$P = 0,36\ K \frac{IE\beta m}{\pi B^2 e} \qquad (1)$$

where I is the cathode current and m and e are the mass and the charge of an electron, respectively. The coefficient K of Eq (1) can be determined from the graph of Fig 3, where L is the length of the interaction space and M is given by Eq (2). The theory states that the generation frequency is expressed by:

APPROVED FOR RELEASE: 06/20/2000 CIA-RDP86-00513R000930310018-6"

"APPROVED FOR RELEASE: 06/20/2000 CIA-RDP86-00513R000930310018-6

Experimental Investigation of a Non-Slowed Backward-Wave Oscillator

$$\omega = \Omega \frac{1}{1 + \frac{v_z}{v_\Phi}} \qquad (5)$$

where Ω is the electron oscillation frequency, v_z is the average electron velocity in the direction of the axis Z and v_Φ is the phase velocity of the electromagnetic wave. The experimental results are shown in Fig 4, 5, 6, 7 and 8. Fig 4 illustrates the dependence of the generated wavelength on the magnitude of the magnetic field; Fig 5 gives the dependence of the oscillation frequency on the electric field and the cathode current, while Fig 6 gives the modulation characteristic of the system. It is seen that the modulation characteristic is almost linear and has a slope of 70 (Mc/s) m/V. The dependence of the output power on the magnetic field is illustrated in Fig 7, while the effect of the cathode current on the wavelength is shown in Fig 8. It is

APPROVED FOR RELEASE: 06/20/2000 CIA-RDP86-00513R000930310018-6"

"APPROVED FOR RELEASE: 06/20/2000 CIA-RDP86-00513R000930310018-6

SOV/109-59-4-2-8/27

Experimental Investigation of a Non-Slowed Backward-Wave Oscillator

concluded that the measured output power of the tube is in good agreement with the value obtained from Eq (1). There are 9 figures and 5 references of which 4 are Soviet and 1 German.

SUBMITTED: 30th April, 1957

Card 4/4

APPROVED FOR RELEASE: 06/20/2000 CIA-RDP86-00513R000930310018-6"

"APPROVED FOR RELEASE: 06/20/2000 CIA-RDP86-00513R000930310018-6

24386

S/142/60/003/005/013/015
E192/E382

9.3260 (1067,1139,1159)

AUTHOR: Lizhdvoy, K.Ya.

TITLE: Influence of the Space Charge on the Frequency of a Phasochronous Generator

PERIODICAL: Izvestiya vysshikh uchebnykh zavedeniy, Radiotekhnika, 1960, Vol. 3, No. 5, pp. 520 - 524

TEXT: The approximate theory of phasochronous generators (Ref. 1 - S.I. Tetel'baum - Radiotekhnika i elektronika, 1957, Vol. 2, No. 6, p. 705) does not take into account the influence of the space charge and, consequently, in the following, an attempt is made to evaluate this effect. The system considered is illustrated in Fig. 1. The waveguide of the generator is formed by two flat parallel conductors, 1 and 2. A voltage U_o which produces an electric field E_o is applied to the conductors. A constant magnetic field, having a magnetic induction B, is produced by an electromagnet with extended pole pieces; this field extends over the whole interaction region. The magnetic-field lines are directed

Card 1/8

APPROVED FOR RELEASE: 06/20/2000 CIA-RDP86-00513R000930310018-6"

"APPROVED FOR RELEASE: 06/20/2000 CIA-RDP86-00513R000930310018-6

24386

S/142/60/003/005/013/015
E192/E382

Influence of the Space Charge ....

along the axis X . The cathode 3 is fixed to the conductor plate 2 . The electrons emitted by the cathode move in crossed electric and magnetic fields along trochoidal trajectories and have a mean velocity $v_z = E_o/B$. In the presence of an electromagnetic wave propagating along the line with a velocity equal to the phase velocity of the particles, a bunching of the electrons takes place and the energy is exchanged between the electron beam and the electromagnetic wave. For the purpose of analysis, the following assumptions are made:

1) the space charge is comparatively small;
2) the length of the cathode along the axis Z is much greater than the distance between two neighbouring minima of the cycloid $2\pi E_o/(e/m)B^2$;
3) the distribution of the space charge along the axis Z is uniform in the absence of the high-frequency field;
4) the beam is unlimited in the direction of X, and
5) along the axis Y the electron beam extends from

Card 2/8

APPROVED FOR RELEASE: 06/20/2000 CIA-RDP86-00513R000930310018-6"

"APPROVED FOR RELEASE: 06/20/2000 CIA-RDP86-00513R000930310018-6

$y = 0$ to $y = 2r_o$, the distance between the conductor plates being b (see Fig. 1).
The effect of the space charge can be taken into account by introducing a term E_q into the equation of the system. The equations can therefore be written as:

$$\left.\begin{aligned} \frac{d^2y}{dt^2} &= \frac{e}{m}\left[E_0 + E_q - E(t)\sin\left(\omega t + 2\pi\frac{z}{\lambda} + \varphi\right)\right] - \Omega\frac{dz}{dt} \\ \frac{d^2z}{dt^2} &= \Omega\frac{dy}{dt} \qquad \frac{d^2x}{dt^2} = 0 \end{aligned}\right\} \qquad (2)\ .$$

For the boundary conditions given by:

$$y = z = y' = z' = 0 \quad \text{at} \quad t = 0\ ,$$

this becomes:

(3)

APPROVED FOR RELEASE: 06/20/2000 CIA-RDP86-00513R000930310018-6"

"APPROVED FOR RELEASE: 06/20/2000 CIA-RDP86-00513R000930310018-6

where φ is the electrostatic potential. The effect of the space charge on the operation of the generator is considered only for the operating conditions near to the starting regime. In this case, the space charge is given by:

$$\rho = \frac{I\Omega}{\frac{e\xi_0}{m}\sin\left[\arccos\left(1-\frac{y}{r_0}\right)\right]}, \quad 0 \ll y \ll 2r_0, \quad 0 \ll \arccos\left(1-\frac{y}{r_0}\right) < \pi. \tag{4a}$$

and E_q is expressed by:

$$E_q = \frac{I}{\Omega\varepsilon_0}\arcsin\left(\frac{y}{r_0}-1\right) - \frac{I\pi}{2\Omega\varepsilon_0}\left(1-\frac{2r_0}{b}\right), \quad 0 < y < 2r_0. \tag{5}$$

Card 4/8

APPROVED FOR RELEASE: 06/20/2000 CIA-RDP86-00513R000930310018-6"

"APPROVED FOR RELEASE: 06/20/2000 CIA-RDP86-00513R000930310018-6

24386

S/142/60/003/005/013/015
E192/E382

Influence of the Space Charge ....

The solution of Eq. (3) is in the form of the sum $y = y_1 + y_2$, where y_1 determines the free oscillations and y_2 expresses the forced oscillation component. It is found that:

$$y_1 = r(1 - \cos \Omega_1 t)$$

where:

$$r = r_o \left[1 - \frac{i\pi}{2\pi\varepsilon_o E_o} \left(1 - \frac{2r_o}{b} \right) \right]$$

and

$$\Omega_1 = \Omega - \frac{2ei}{\pi m \Omega^2 \varepsilon_o r} \qquad (13) .$$

Card 5/8

APPROVED FOR RELEASE: 06/20/2000 CIA-RDP86-00513R000930310018-6"

"APPROVED FOR RELEASE: 06/20/2000 CIA-RDP86-00513R000930310018-6

24386

S/142/60/003/005/013/015
E192/E382

Influence of the Space Charge ....

The last equation gives the oscillation frequency of the electrons when the space charge is taken into account. The forced oscillations can be described by

$$\frac{d^2y}{dt^2} + \Omega_1^2 y_2 = -\frac{e}{m} E(t) \sin(\Omega_1 t + \varphi), \qquad (16)$$

where

$$v_\phi = v_z \frac{\omega_1}{\Omega_1 - \omega_1} \qquad (17).$$

The solution of this equation is:

$$y_2 = \frac{e}{2m\Omega_1} \int_0^t E(t)\, dt \cdot \cos(\Omega_1 t + \varphi)$$

so that the final solution of Eq. (3) is:

Card 6/8

APPROVED FOR RELEASE: 06/20/2000 CIA-RDP86-00513R000930310018-6"

"APPROVED FOR RELEASE: 06/20/2000 CIA-RDP86-00513R000930310018-6

$$y \cong r(1 - \cos \Omega_1 t) + \frac{e}{2m\Omega_1} \int_0^t E(t)\, dt \cdot \cos(\Omega_1 t + \varphi) .$$

From the above it can be seen that at small powers (i.e. in the case of the starting regime) the oscillator frequency ω_1 is:

$$\omega_1 = \Omega \frac{1}{1 + \frac{E_o}{Bv_\Phi}} \; 1 - \left(\frac{2ei}{\pi m \Omega^2 \varepsilon_o r_o} \right) \qquad (18) .$$

This equation permits calculation of the oscillation frequency of the generator; the oscillation frequency is lowered by the presence of the space charge. There are 2 figures and 2 Soviet references.

APPROVED FOR RELEASE: 06/20/2000 CIA-RDP86-00513R000930310018-6"

"APPROVED FOR RELEASE: 06/20/2000 CIA-RDP86-00513R000930310018-6

24386

S/142/60/003/005/013/015
E192/E382

Influence of the Space Charge ....

ASSOCIATION: Kafedra radioperedayushchikh ustroystv Kiyevskogo ordena Lenina politekhnicheskogo instituta (Chair of Radio-transmitting Devices of the Kiyev "Order of Lening" Polytechnical Institute)

SUBMITTED: March 23, 1960

Fig. 1:

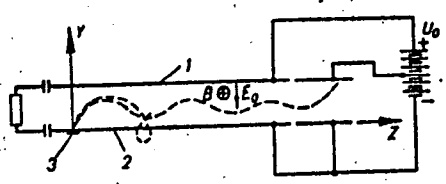

Card 8/8

APPROVED FOR RELEASE: 06/20/2000 CIA-RDP86-00513R000930310018-6"

"APPROVED FOR RELEASE: 06/20/2000 CIA-RDP86-00513R000930310018-6

74230

4341

S/142/62/005/006/003/01

E192/E382

AUTHORS: Lizhdboy, K. Ya. and Trokhimenko, Ya.K.

TITLE: Calculation of the coupling resistance in period delay systems

PERIODICAL: Izvestiya vysshi

APPROVED FOR RELEASE: 06/20/2000 CIA-RDP86-00513R000930310018-6"

"APPROVED FOR RELEASE: 06/20/2000 CIA-RDP86-00513R000930310018-6

Calculation of [illegible]

[illegible] the n-th space harmonic is given by:

$$R_n = A_1 \cdot \frac{c}{V_{gr}} \cdot \frac{1}{(\varphi + 2\pi n)^4} \sin^2\left(\frac{\varphi + 2\pi n}{2}\right) \cdot \frac{d}{\ell} \qquad (15)$$

where φ is the phase-shift for one period of the system for the principal harmonic, $A_1 = 4\ell^3/Ac$ is the proportionality coefficient depending on the configuration of the delay system, c is the velocity of light and ℓ and d are defined in Fig. 1. Eq. (15) can be used to evaluate the optimum value of d/ℓ for various values of φ. This optimum ratio is expressed as:

SUB.

rd 3,

Card 2/3

Fig. 1:

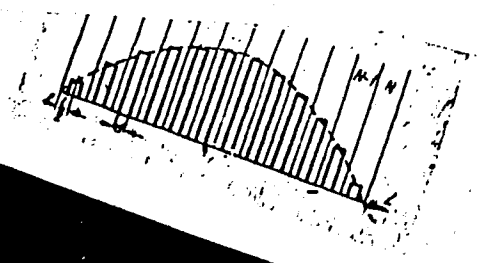

P86-00513R000

"APPROVED FOR RELEASE: 06/20/2000 CIA-RDP86-00513R000930310018-6

LIZHDVOY, K.Ya.; TROKHIMENKO, Ya.K.

Calculation of coupling resistance of periodic delay systems. Izv.vys.ucheb.zav.; radiotekh. 5 no.6:682-687 N-D '62. (MIRA 16:1)

1. Rekomendovana kafedroy radioperedayushchikh ustroystv Kiyevskogo ordena Lenina politekhnicheskogo instituta.
(Radio) (Delay lines)

APPROVED FOR RELEASE: 06/20/2000 CIA-RDP86-00513R000930310018-6"

"APPROVED FOR RELEASE: 06/20/2000 CIA-RDP86-00513R000930310018-6

ACCESSION NR: AP4040751 S/0142/64/007/002/0200/0204

AUTHOR: Lizhdvoy, K. Ya.

TITLE: Procedure for measuring the coupling resistance of slow wave systems with a dielectric probe

SOURCE: IVUZ. Radiotekhnika, v. 7, no. 2, 1964, 200-204

TOPIC TAGS: slow wave system, traveling wave interaction, cavity resonator, electric field, probe measurement

ABSTRACT: In view of the considerable difficulties involved in the analytic calculation of the coupling resistance of slow-wave systems, the author describes an experimental procedure based on the use of a dielectric probe, which makes it possible to determine directly the ratio of the square of the field intensity to the energy stored in the cavity, the detuning of which determines the coupling resistance of a periodic slow-wave system. After first determining the coeffi-

Card 1/3

APPROVED FOR RELEASE: 06/20/2000 CIA-RDP86-00513R000930310018-6"

"APPROVED FOR RELEASE: 06/20/2000 CIA-RDP86-00513R000930310018-6

ACCESSION NR: AP4040751

cient B in the formula for the cavity frequency deviation

$$\frac{\Delta\lambda}{\lambda} = B\frac{E_\Sigma^2}{W_1},$$

(W_1 -- total energy stored in cavity, E_Σ -- field intensity at probe location) in terms of the cavity dimensions, the author evaluates the coupling resistance for the particular case of operation at the first spatial harmonic for slow-wave systems with small drift gaps, when the field can be regarded as uniform along the gap. It is also shown that although assumption of a bell-shaped field in the gap would greatly complicate the calculations, the numerical results would differ little from those of a uniform field. Orig. art. has: 12 formulas and 1 figure.

ASSOCIATION: None

Card 2/3

APPROVED FOR RELEASE: 06/20/2000 CIA-RDP86-00513R000930310018-6"

"APPROVED FOR RELEASE: 06/20/2000 CIA-RDP86-00513R000930310018-6

LIZHDVOY, K.Ya.

Methods for measuring he coupling impedance of a delay system using a dielectric probe. Izv. vys. uchab. zav.; radiotekh. 7 no.2:200-204 Mr-Ap '64. (MIRA 17:8)

APPROVED FOR RELEASE: 06/20/2000 CIA-RDP86-00513R000930310018-6"

"APPROVED FOR RELEASE: 06/20/2000 CIA-RDP86-00513R000930310018-6

L 44350-66 EWT(m)/EWP(t)/ETI/EWP(k) IJP(c) JD/HW

ACC NR: AP6012610 SOURCE CODE: UR/0182/66/000/004/0017/0019

AUTHOR: Chernyavskaya, S. G.; Malinovskaya, T. I.; Moshkevich, L. D.; Lizhdvoy, R. A.

ORG: none

32
B

TITLE: Effect of the flowsheet of technological deformation, and of the regimes of heating and homogenizing on the structural banding of ShKh15 steel

SOURCE: Kuznechno-shtampovochnoye proizvodstvo, no. 4, 1966, 17-19

TOPIC TAGS: machine steel, metal grain structure, metal rolling, metal forging, homogenization heat treatment / ShKh15 machine steel

ABSTRACT: The problems of maximizing the homogeneity of the structure and properties of metal are particularly acute as regards the special steels used in the machine building industry: by way of an example, the authors consider the effect of various schemes of deformation (rolling, forging, etc.) on the development of coarse structural banding in ShKh15 steel (1.00% C, 0.018% P, 1.43% Cr, 0.006% S, 0.28% Si, 0.11% Ni, 0.35% Mn, 0.11% Cu), since such banding affects adversely the quality of this steel. Experimental investigation of various types of deformation and heat treatment and homogenizing established the following:

Card 1/2 UDC: 669.14.018.26

APPROVED FOR RELEASE: 06/20/2000 CIA-RDP86-00513R000930310018-6"

"APPROVED FOR RELEASE: 06/20/2000 CIA-RDP86-00513R000930310018-6

L 44350-66

ACC NR: AP6012610

structural banding of rolled stock is not reduced by forging it into a square shape or by its hot upsetting. On the other hand, the homogenizing of 140x140 mm billets in laboratory conditions at 1160°C for 10 hr reduces the extent of structural banding from 3.5-4.5 to 2.0, and for 20 hr, to 1.5. Homogenizing at 1160°C for 2 hr with respect to the ingots obtained from a vacuum arc furnace reduces the extent of structural banding from 3.5 to 1.5 in rolled stock of 38 mm diameter. Reheating of intermediate 180x180 mm billets during the forging of the ingot into 140x140 mm square shape reduces the extent structural of banding, but it is technically not as convenient as the homogenizing of ingots combined with their heating prior to forging. Orig. art. has: 4 figures, 2 tables.

SUB CODE: 11, 13/ SUBM DATE: none/

Card 2/2 blg

APPROVED FOR RELEASE: 06/20/2000 CIA-RDP86-00513R000930310018-6"

"APPROVED FOR RELEASE: 06/20/2000 CIA-RDP86-00513R000930310018-6

LIZICHEV, A., mayor

Always and in all respects try to equal the Communists. Komm. Vooruzh.Sil 3 no.20:69-74 O'62. (MIRA 15:10)

1. Pomoshchnik nachal'nika Glavnogo politicheskogo upravleniya Sovetskoy Armii i Voyenno-Morskogo flota po komsomol'skoy rabote. (Military dicipline) (Communist Youth League)

APPROVED FOR RELEASE: 06/20/2000 CIA-RDP86-00513R000930310018-6"

"APPROVED FOR RELEASE: 06/20/2000 CIA-RDP86-00513R000930310018-6

LIZICHEV, A., podpolkovnik

Communist Youth League organizations in the army and navy. Komm. Vooruzh. Sil 4 no.21:51-56 N '63. (MIRA 17:1)

APPROVED FOR RELEASE: 06/20/2000 CIA-RDP86-00513R000930310018-6"

"APPROVED FOR RELEASE: 06/20/2000 CIA-RDP86-00513R000930310018-6

KOCHINEV Yu.G., kand.tekhn.nauk; LIZIN, P.Ya.

Automatic system for geophysical oil-well logging. Biul.tekh.-ekon.inform.Gos.nauch.-issl.inst.nauch. i tekh.inform. 16 no. 10:45-47 '63. (MIRA 16:11)

APPROVED FOR RELEASE: 06/20/2000 CIA-RDP86-00513R000930310018-6"

"APPROVED FOR RELEASE: 06/20/2000 CIA-RDP86-00513R000930310018-6

LIZINA, A.I.

GRIGOROV, N.D., kand. ekon. nauk; DEMIDOVA, L.A., kand. ekon. nauk; LEGKOSTUP, I.M., kand. ekon. nauk; MAKEYEV, T.M., kand. ekon. nauk; TERESHINA, N.Ya., kand. ekon. nauk; LIZINA, A.I., kand. ist. nauk; BURDAKOVA, A.P.; BELYAYEV, Yu.B., prepodavatel' vysshikh uchebnykh zavedeniy; LYUBIN, V.A., prepodavatel' vysshikh uchebnykh zavedeniy; IVANOV, N.A., lektor; KUZ'MICHEV, V.S., lektor; SUBBOTIN, P.M., lektor; RAPPOPORT, G., red.; GRIN', Ye., tekhn. red.

[Development of the economy and culture of the Altai Territory during 40 years of the Soviet regime] Razvitie ekonomiki i kul'tury Altaiskogo kraia za 40 let sovetskoi vlasti. Barnaul, Altaiskoe knizhnoe izd-vo, 1957. 229 p. (MIRA 11:5)

1. Zaveduyushchiy krayzdravotdelom Altayskogo kraya (for Burdakova).
2. Altayskiy kraykom Kommunisticheskoy partii Sovetskogo Soyuza (for Ivanov, Kur'michev, Subbotin).
(Altai Territory--History)

APPROVED FOR RELEASE: 06/20/2000 CIA-RDP86-00513R000930310018-6"

"APPROVED FOR RELEASE: 06/20/2000 CIA-RDP86-00513R000930310018-6

LIZINSKAYA, M.M., inzh.

Automation of thermal processes in electric power plants. Energetik 11 no.11:4-7 N '63. (MIRA 16:11)

APPROVED FOR RELEASE: 06/20/2000 CIA-RDP86-00513R000930310018-6"

"APPROVED FOR RELEASE: 06/20/2000 CIA-RDP86-00513R000930310018-6

LIZINSKIY, D.A., inzh.

Problems of the vertical planning of petroleum refineries. Prom. stroi. 40 no.11:24-27 '62. (MIRA 15:12)

1. Lengiprogaz. (Petroleum refineries)

APPROVED FOR RELEASE: 06/20/2000 CIA-RDP86-00513R000930310018-6"

"APPROVED FOR RELEASE: 06/20/2000 CIA-RDP86-00513R000930310018-6

LIZIS, Zdzislaw

Restorative articular oblique osteotomy in hip joint tuberculosis. Polski tygod. lek. 11 no.49:2081-2083 3 Dec 1956.

1. (Z Oddzialu Gruzlicy Stawowo-Kostnej Szpitala Zakaznego im. Tytusa Chalubinskiego w Chelmie Lubelskim; ordynator: Zdzislaw Lizis, dyrektor Szpitala: dr. med. Stanislaw Skalski).
(TUBERCULOSIS, OSTEOARTICULAR, surgery,
hip osteotomy (Pol))

APPROVED FOR RELEASE: 06/20/2000 CIA-RDP86-00513R000930310018-6"

"APPROVED FOR RELEASE: 06/20/2000 CIA-RDP86-00513R000930310018-6

LIZKO, I.F., zasluzhennyy vrach UkrSSR; PAN'KO, A.K.

Penetration of gastroenteroanastomotic ulcer into the anterior abdominal wall. Klin. khir. no.10:73 O '62. (MIRA 16:7)

1. Khirurgicheskoye otdeleniye Nikolayevskoy oblastnoy bol'nitsy.
(STOMACH—ULCERS)

APPROVED FOR RELEASE: 06/20/2000 CIA-RDP86-00513R000930310018-6"

"APPROVED FOR RELEASE: 06/20/2000 CIA-RDP86-00513R000930310018-6

LIZKO, I.V.; PAN'KO, A.K.

Hydatid cyst of the diaphragm with a secondary relaxation. Klin. khir. n.6:74 Je '62. (MIRA 16:5)

1. Nikolayevskaya oblastnaya bol'nitsa.
(DIAPHRAGM—HYDATIDS)

APPROVED FOR RELEASE: 06/20/2000 CIA-RDP86-00513R000930310018-6"

"APPROVED FOR RELEASE: 06/20/2000 CIA-RDP86-00513R000930310018-6

L 63881-65 EWT(1)/EWA(h)

ACCESSION NR: AP5014005 UR/0119/65/000/005/0025/0026
621.374.32

26
B

AUTHOR: Alekshin, A. D. (Engineer); Liz'ko, Yu. V. (Engineer)

TITLE: Circuit of a decimal pulse counter with luminous display

SOURCE: Priborostroyeniye, no. 5, 1965, 25-26

TOPIC TAGS: decimal counter, pulse counter

ABSTRACT: A semiconductor decimal pulse counter circuit with conventional triggers and decoders is briefly described. Two diode decoders 2--10 and 10--7 convert the trigger binary potential signals into base-7 code signals to operate a 7-segment luminescent number-display panel. The luminescent segments are supplied at 150--200v 5--10 kc via electromagnetic-relay contacts. The circuit is claimed to be stable [illegible] frequency up to 200 kc. [Abstracter's note: No experimental verification is mentioned]. Orig. art. has: 3 figures and 1 table.

ASSOCIATION: none

SUBMITTED: 00 ENCL: 00 SUB CODE: EC

Card 1/1 NO REF SOV: 000 OTHER: 000

APPROVED FOR RELEASE: 06/20/2000 CIA-RDP86-00513R000930310018-6"

"APPROVED FOR RELEASE: 06/20/2000 CIA-RDP86-00513R000930310018-6

LIZIKOV, S.

"Electric-power plants without buildings."

STROITELSTVO., Sofiia, Bulgaria., Vol. 6, No. 1, 1959

Monthly list of EAST EUROPEAN ACCESSIONS (EEAI), LC, Vol. 8, No. 7, July 1959, Unclas

APPROVED FOR RELEASE: 06/20/2000 CIA-RDP86-00513R000930310018-6"

"APPROVED FOR RELEASE: 06/20/2000 CIA-RDP86-00513R000930310018-6

LIZNER, Josef, inz.

Enclosed conductors for alternators. El tech obzor 50 no.10:603

1. Energovod, n.p., Praha.

(Dynamos) (Electric conductors)

APPROVED FOR RELEASE: 06/20/2000 CIA-RDP86-00513R000930310018-6"

"APPROVED FOR RELEASE: 06/20/2000 CIA-RDP86-00513R000930310018-6

LIZNER, Josef, inz.

Isolated high-voltage conductors for heavy current. El tech obzor 51 no.4:180-186 Ap '62.

1. Energovod, Praha.

APPROVED FOR RELEASE: 06/20/2000 CIA-RDP86-00513R000930310018-6"

"APPROVED FOR RELEASE: 06/20/2000 CIA-RDP86-00513R000930310018-6

PETROV, D.F.; LIVNEV, V.N.

Use of X-rays and neutrons for the improvement of hybrid variation of apple. Trudy ISSRS no. 2:34-96 '64. (MIRA 17:9)

APPROVED FOR RELEASE: 06/20/2000 CIA-RDP86-00513R000930310018-6"

"APPROVED FOR RELEASE: 06/20/2000 CIA-RDP86-00513R000930310018-6

LIZOGUB, A.A.

GOBYAYNOV, K.M., doktor tekhn. nauk; YEFIMOV, A.D.; VOLCHEK, I.Z., kand. tekhn. nauk; AVRUTIN, M.L., inzh.; LIZOGUB, A.A., inzh.; ZASHDATELEV, I.B., inzh.

Large wall blocks made of autoclave hardened lightweight concrete. Biul. tekh. inform. 4 no.2:1-5 F '58. (MIRA 11:3)

1. Chlen-korrespondent Akademii stroitel'stva arkhitektury (for Yefimov).

(Concrete blocks) (Lightweight concrete)

APPROVED FOR RELEASE: 06/20/2000 CIA-RDP86-00513R000930310018-6"

"APPROVED FOR RELEASE: 06/20/2000 CIA-RDP86-00513R000930310018-6

GORYAINOV, K., doktor tekhn. nauk.; VOLCHEK, I., kand.tekhn.nauk;
KUPRIYANOV, V., kand.tekhn. nauk; LIZOGUB, A.A.inzh.

Using cinder from heat and electric power plants in making large porous blocks. Stroi. mat. 4 no.8:14-17 Ag '58. (MIRA 11:9)
(Cinder blocks)

APPROVED FOR RELEASE: 06/20/2000 CIA-RDP86-00513R000930310018-6"

"APPROVED FOR RELEASE: 06/20/2000 CIA-RDP86-00513R000930310018-6

PHASE I BOOK EXPLOITATION SOV/4726

Kiyev. Gosudarstvennyy nauchno-issledovatel'skiy i proyektnyy institut ugol'noy rudnoy, neftyanoy i gazovoy promyshlennosti

Nauchnyye zapiski, vyp. 1: Dobycha i pererabotka nefti (Scientific Reports of the State Scientific Research and Project Institute for the Coal, Mining, Oil, and Gas Industries, No. 1: Extraction and Processing of Petroleum) Kiyev, 1960. 91 p. 1,000 copies printed.

Sponsoring Agencies: UkrSSR Gosudarstvennaya planovaya komissiya Soveta Ministrov; Gosudarstvennyy nauchno-issledovatel'skiy i proyektnyy institut ugol'noy, rudnoy, neftyanoy, i gazovoy promyshlennosti "Ukrniiproyekt."

Editorial Council: V. P. Aksenov, S. Ye. Anushin, S. I. Balinskiy, V. Ya. Volchanskiy, D. I. Gol'tsev, V. S. Grinshteyn (Resp. Secretary), B. V. Dzhanovskiy, M. M. Zherbin (Chairman), A. P. Kotov, M. I. Logvinov, Yu. M. Ostrovskiy, L. M. Orzhekhovskaya, O. V. Prisedskiy, V. T. Sklyar (Deputy Chairman), N. Yu. Staziv, and V. V. Tsaritsyn; Resp. Ed. for this Collection: V. T. Skylar, Candidate of Chemical Sciences; Ed.: A. Novik.

Card 1/5

PURPOSE: This collection of articles is intended for petroleum researchers, engineers, and refiners.

COVERAGE: The collection of articles deals with the production and refining of petroleum. Individual articles discuss the effect of bound water on the depletion of petroleum deposits under dissolved gas conditions, the effect of pressure on the viscosity of degasified petroleum, the structure of high-molecular petroleum hydrocarbons, the asphaltene and tar components of Carpathian crudes and menilite shale asphalts, and the aliphatic composition of alcohols produced by selective hydrogenation of the CO and H_2 product of synthesis. Other articles describe the carbamide dewaxing method for filtrates of wax distillates, the production of flotation agents with the use of oxidized petrolatum, and the investigation of six-membered aromatic and naphthenic hydrocarbons by means of infrared absorption spectra. The remaining articles are on the relations of pressure-volume-temperature-ethylene and on the phase equilibrium in ethylene-n-hexane, ethylene-cyclohexane, and ethylene-benzene systems. Specific volumes and compression coefficients at

Card 2/5

PETROLEUM REFINING

Sergiyenko, S. R., Ye. V. Lebedev, and A. A. Mikhnovskaya. On the Structure of High Molecular Hydrocarbons of Petroleum 13

Card 3/5

Sklyar, V. T., A. P. Lizogub, A. P. Mal'nev, and G. A. Puchkovskaya. Study of Six-Membered Aromatic and Naphthenic Hydrocarbons by Infrared Absorption Spectra 25

Sklyar, V. T., L. M. Samtsova, T. G. Sokolova, and N. V. Aref'yev. Asphaltene and Tar Components of Some Carpathian Petroleums and Asphalts of Menilite Shales 30

Sabirova, G. V., G. M. Shapovalov, and V. N. Karaseva. Production of an Effective Flotation Agent Based on Oxidized Petrolatum 56

Zhurba, A. S., and T. P. Zhuze. Comparison of the Ethylene-n-Hexane, Ethylene-Cyclohexane, and Ethylene-Benzene Systems by the p-v-t-N [pressure-volume-temperature-molar fraction of ethylene in the mixture] Relations and Phase Equilibrium 68

Zhuze, T. P., and A. S. Zhurba. Specific Volumes and Compression Coefficients of the n-Hexane-Ethylene System in the Interval of Pressure to 150 atm and Temperature of 30-150°C 78

Card 4/5

APPROVED FOR RELEASE: 06/20/2000 CIA-RDP86-00513R000930310018-6"

"APPROVED FOR RELEASE: 06/20/2000 CIA-RDP86-00513R000930310018-6

LIZOGUB, A.P.; SKLYAR, V.T.

Quantitative determination of condensed aromatic hydrocarbons in kerosene-gas oil fractions of Dolina and Bitkov petroleums by absorption spectra in the near-ultraviolet. Zhur.anal.khim. 15 no.4:517-520 Jl-Ag '60. (MIRA 13:9)

1. Ukrainian Scientific Research Institute of Geology and Prospecting, Lvov.
(Hydrocarbons--Analysis)

APPROVED FOR RELEASE: 06/20/2000 CIA-RDP86-00513R000930310018-6"

"APPROVED FOR RELEASE: 06/20/2000 CIA-RDP86-00513R000930310018-6

ZABOLOTNYY, I.I.; LIZOGUB, A.P.

Gas formation in the acidic corrosion of zinc. Zhur. prikl. khim. v. 31 no.5:730-734 My '58. (MIRA 11:6)
(Zinc--Corrosion) (Hydrogen)

APPROVED FOR RELEASE: 06/20/2000 CIA-RDP86-00513R000930310018-6"

"APPROVED FOR RELEASE: 06/20/2000 CIA-RDP86-00513R000930310018-6

11 (4), 24 (7) SOV/48-23-10-33/39

AUTHORS: Sklyar, V. T., Lizogub, A. P.

TITLE: Investigation of the Composition of the Aromatic Part of the Kerosene Gas Oil Fraction of Dolina Petroleum According to the Absorption Spectra in the Ultraviolet Range

PERIODICAL: Izvestiya Akademii nauk SSSR. Seriya fizicheskaya, 1959, Vol 23, Nr 10, pp 1256 - 1259 (USSR)

ABSTRACT: The fractions of aromatic hydrocarbons obtained in short temperature intervals (2 to 5°) from South-Ukrainian petroleums were investigated uv-spectroscopically (spectrograph of the type ISP-22, spectrophotometer of the type SF-4). Part of the λ-curves obtained (as a function of the optical density of a 1% solution of the investigated fraction, layer thickness 1 cm) is shown by the 5 diagrams in figures 2 and 3. A total of 124 spectra of fractions containing monocyclic aromatic hydrocarbons was investigated. Figure 1 shows a clear investigation scheme with detailed data. A table gives the boiling point and the refractive index of 26 of the fractions investigated. All fractions contain the following hydrocarbon groups irrespective of their physico-chemical characteristics: monoalkyl benzenes, para- and metadisubstituted benzenes, trialkyl benzenes and

Card 1/3

APPROVED FOR RELEASE: 06/20/2000 CIA-RDP86-00513R000930310018-6"

"APPROVED FOR RELEASE: 06/20/2000 CIA-RDP86-00513R000930310018-6

Investigation of the Composition of the Aromatic Part of the Kerosene Gas Oil Fraction of Dolina Petroleum According to the Absorption Spectra in the Ultraviolet Range SOV/48-23-10-33/39

tetralkyl benzenes of all three substitution types. The maxima were at about 256, 260; 265, 273; 262, 268, and 277.5 mμ, respectively. Of two fractions containing monocyclic aromatic hydrocarbons also the Raman spectra were investigated, and monoalkyl benzene, 1,3- and 1,4-dialkyl-1,2,4- and 1,3,5-trialkyl and 1,2,3,5-tetralkyl benzenes were found. Also the fractions containing condensed hydrocarbons were subjected to a detailed investigation. In the near ultraviolet range sharp absorption bands of the condensed aromatic hydrocarbons or of their mixtures were found. Figure 3 shows the existence of naphthalene and its homologues, phenanthrene, and 2,3-dimethyl phenanthrene. Among the homologues of naphthalene the following were identified: α- and β-alkyl naphthalenes, 1,2-, 1,3-, 1,5-, 1,6-, and 1,7-dialkyl naphthalenes, and trialkyl naphthalenes with 1,3,5-, 1,4,6-, and 1,2,5-structure. The attempt was made, by using the values for the optical density obtained, quantitatively to determine the naphthalene content in the petroleums investigated. A value of 0.04% was obtained.

Card 2/3

APPROVED FOR RELEASE: 06/20/2000 CIA-RDP86-00513R000930310018-6"

"APPROVED FOR RELEASE: 06/20/2000 CIA-RDP86-00513R000930310018-6

Investigation of the Composition of the Aromatic Part of the Kerosene Gas Oil Fraction of Dolina Petroleum According to the Absorption Spectra in the Ultraviolet Range SOV/48-23-10-33/39

There are 3 figures, 1 table, and 5 references, 3 of which are Soviet.

ASSOCIATION: Ukrainskiy nauchno-issledovatel'skiy geologorazvedochnyy institut (Ukrainian Scientific Research Institute for Geological Prospecting)

Card 3/3

APPROVED FOR RELEASE: 06/20/2000 CIA-RDP86-00513R000930310018-6"

"APPROVED FOR RELEASE: 06/20/2000 CIA-RDP86-00513R000930310018-6

LIZOGUB, A. P. Cand Chem Sci — (diss) "Investigation of the chemical composition of the kerosene-gas oil fraction of the Dolinsk and Bitkovsk petroleums," Kiev, 1960, 16 pp, 120 cop. State Sci Res and Planning Institute of Coal, Mineral, Petroleum and Gas Industries - "Ukrniiproyekt") (KL, 42-60, 111)

APPROVED FOR RELEASE: 06/20/2000 CIA-RDP86-00513R000930310018-6"

"APPROVED FOR RELEASE: 06/20/2000 CIA-RDP86-00513R000930310018-6

34287
S/710/60/000/001/002/004
D055/D113

11.1210

AUTHORS: Sklyar, V.T.; Lizogub, A.P.; Mal'nev, A.F.; Puchkovskaya, G.A.

TITLE: A study of six-membered aromatic and naphthene hydrocarbons according to infra-red absorption spectra

SOURCE: Kiyev. Gosudarstvennyy nauchno-issledovatel'skiy i proyektnyy institut ugol'noy, rudnoy, neftyanoy i gazovoy promyshlennosti. Nauchnyye zapiski, no. 1, 1960. Dobycha i pererabotka nefti, 25-29.

TEXT: The results of a study of the chemical composition of the kerosene and gas-oil part of Dolinskaya and Bitkovo oils, using infra-red spectroscopy, are given. Spectra of narrow fractions containing benzene homologues obtained directly from the oil and also by catalytic dehydrogenization of hydrocarbons of the cyclohexane series were recorded in the region of 680-1040 cm^{-1} with the aid of ВИКС-3 (VIKS-3) vacuum infra-red spectrometer. A globar heated by alternating current (7-8 A) to 900-1000°C served as the

Card 1/2

APPROVED FOR RELEASE: 06/20/2000 CIA-RDP86-00513R000930310018-6"

"APPROVED FOR RELEASE: 06/20/2000 CIA-RDP86-00513R000930310018-6

34287
S/710/60/000/001/002/004
D055/D113

A study of six-membered ...

light source. Radiation was interrupted by a modulator with a frequency of 9 hz. During the recording of the spectrum and the rotation of the prism, the apertures of the spectrometer were opened so as to ensure the balancing of the intensity of the globar spectrum according to wavelength. The apparatus was graduated according to absorption spectra of polystyrene, carbon dioxide and water vapor. The product to be studied was placed in a vessel consisting of two plates of rock salt separated by a lead strip 15 μ thick. Transparency curves were calculated on the basis of the globar spectra and fractions recorded. These curves have absorption bands which are characteristic of benzene nuclei of various substitution types. Interpretation of the absorption spectra shows that the kerosene and gas-oil part of Dolinskaya and Bitkovo oils contains mono-, di-, tri- and possibly tetra-substituted benzenes and cyclohexanes. The similarity observed between spectrograms of fractions which are products of the dehydrogenization of naphthenes and those of fractions containing primary homologues of benzene, indicates that the structures of hydrocarbons of the benzol and cyclohexane series in the oil fractions studied, are of the same type. There are 3 tables, 3 figures and 8 Soviet references. [Abstracter's note: Essentially complete translation]

Card 2/2

APPROVED FOR RELEASE: 06/20/2000 CIA-RDP86-00513R000930310018-6"

"APPROVED FOR RELEASE: 06/20/2000 CIA-RDP86-00513R000930310018-6

S/065/60/000/010/001/010
E030/E412

AUTHORS: Sklyar, V.T. and Lizogub[redacted]

TITLE: Investigation of the Naphthenic Hydrocarbons in the Kerosene and Gas Oil Fraction of Dolina Bitkovskiy Crudes

PERIODICAL: Khimiya i tekhnologiya topliv i masel, 1960, No.10, pp.1-5

TEXT: Investigation of the naphthenic hydrocarbons has been extended from the gasoline fraction into the kerosene/gas oil fraction, boiling from 200 to 375°C for Dolina and from 200 to 400°C for Bitkovskiy crudes. Apart from five-membered rings, the naphthenes were indirectly determined by successive dehydrogenations (in the gas phase, followed by chromatographic extraction over 100 mesh silica gel for the 200 to 300°C fractions, and in the liquid phase for the higher fractions), and by examining the ultraviolet absorption spectrum for aromatics in the successive catalysates. The density and refractive index of the

Card 1/2

APPROVED FOR RELEASE: 06/20/2000 CIA-RDP86-00513R000930310018-6"

"APPROVED FOR RELEASE: 06/20/2000 CIA-RDP86-00513R000930310018-6

S/065/60/000/010/001/010
E030/E412

Investigation of the Naphthenic Hydrocarbons in the Kerosene and Gas Oil Fraction of Dolina and Bitkovsky Crudes

catalysates were also checked. The proportions of decalin homologues are in the following descending order: trialkyl-decalins (1,2,5; 1,2,7; 1,3,5; and 1,4,6), dialkyl-decalins (1,2; 1,3; 1,5; 1,6; and 1,7), iso-alkyldecalins (alpha and beta). They constitute about 5% weight of the naphthenes in each crude and cut. Benzene homologues form about 15% weight (1,2,4; 1,2,3; and 1,3,5 trialkylcyclohexane and 1,2,3,4; 1,2,3,5; and 1,2,4,5 tetraalkylcyclohexane). Five-membered rings and isoparaffins together form about 75% of the naphthenes. Polycyclic naphthenes have been identified in the Bitkovsky cuts above 350°C. The molecular weight ranges are about 150 to 230 (benzene homologues), 150 to 210 (condensed ring compounds) and 160 to 280 (isoparaffins and five-membered ring naphthenes. There are 3 figures, 2 tables and 10 references: 9 Soviet and 1 non-Soviet.

ASSOCIATION: UKRNIIPROYeKT
Card 2/2

APPROVED FOR RELEASE: 06/20/2000 CIA-RDP86-00513R000930310018-6"

"APPROVED FOR RELEASE: 06/20/2000 CIA-RDP86-00513R000930310018-6

SKLYAR, V.T.; LIZOGUB, A.P.

Aromatic hydrocarbons of the kerosene - gas oil fraction of the Bitkov and Dolina petroleum, as studied by means of absorption spectra in the near ultraviolet. Ukr. khim. zhur. 26 no.2:260-269 '60. (MIRA 13:9)

1. Ukrainskiy nauchno-issledovatel'skiy gornorudnyy institut Glavgeologii USSR, L'vov.
(Hydrocarbons--Spectra)

APPROVED FOR RELEASE: 06/20/2000 CIA-RDP86-00513R000930310018-6"

"APPROVED FOR RELEASE: 06/20/2000 CIA-RDP86-00513R000930310018-6

SKLYAR, V.T.; LIZOGUB, A.P.

Aromatic hydrocarbons from the kerosene-gas oil fraction of Dolina crudes. Khim.i tekh.topl.i masel 6 no.3:26-31 Mr '61. (MIRA 14:3)

1. Ukrainskiy nauchno-issledovatel'skiy geologo-razvedochnyy institut.
(Hydrocarbons) (Kerosene)

APPROVED FOR RELEASE: 06/20/2000 CIA-RDP86-00513R000930310018-6"

"APPROVED FOR RELEASE: 06/20/2000 CIA-RDP86-00513R000930310018-6

32334
S/081/61/000/024/066/086
B102/B108

11.0130

AUTHORS: Sklyar, V. T., Lebedev, Ye. V., Lizogub, A. P., Zhurba, A. S., Perekrest, A. N., Lebedeva, L. B., Baranovskiy, M. I.

TITLE: Some ways of a more rational reprocessing of paraffin petroleums of Western Ukraine

PERIODICAL: Referativnyy zhurnal. Khimiya, no. 24, 1961, 467, abstract 24M63 (Nauchn. zap. Gos. n.-i. i proyektn. in-t ugol'n. rudn. neft. i gaz. prom-sti "Ukrniiproyekt", no. 4, 1961, 87 - 112)

TEXT: Results are presented of a study of a possibility of deepest and most rational exploitation of the petroleums of Dolinskoye and Bitkovskoye deposits which are characterized by a high content of light oils (Dolinskoye: 54.4%, Bitkovskoye: 43.1%), high paraffin content (16 and 17%, respectively), and low content of sulfur (0.35 - 0.55%). Thorough investigations of the Dolinskiye petroleums showed that in the deparaffinization of diesel fuel fraction by selective solvents at low temperatures, low-melting paraffin hydrocarbons can be separated which

Card 1/2

APPROVED FOR RELEASE: 06/20/2000 CIA-RDP86-00513R000930310018-6"

"APPROVED FOR RELEASE: 06/20/2000 CIA-RDP86-00513R000930310018-6

32334
S/081/61/000/024/066/086
B102/B108

Some ways of a more rational...

are a valuable raw material for the petrochemical industry. The quantity separated is 17 - 20% per fraction or 3.5 - 4.1% per petroleum. Deparaffinization of the fractions corresponds to the demands of the ГОСТ (GOST) for diesel summer fuel and special fuel. At low temperatures solid paraffin hydrocarbons were separated in quantities of 28% per fraction or 8% per petroleum by means of selective solvents from the distilled fraction of medium paraffin petroleum. From the deparaffinized part petroleum components of high viscosity can be obtained. From the distilled fraction of heavy paraffin petroleum solid hydrocarbons (35% per fraction), as well as diesel and tractor oils with a viscosity index of 87 can be obtained. High-quality residual oils (~2.8% per petroleum) and ceresins (~0.7% per petroleum), as well as improved-quality bitumens can be obtained from the petroleum asphalts. A possibility of obtaining gas-turbine fuel, plasticizers for rubber and low-sulfur coke is shown. [Abstracter's note: Complete translation.]

Card 2/2

APPROVED FOR RELEASE: 06/20/2000 CIA-RDP86-00513R000930310018-6"

"APPROVED FOR RELEASE: 06/20/2000 CIA-RDP86-00513R000930310018-6

SKLYAR, V.T., kand.khimicheskikh nauk; LEBEDEV, Ye.V., kand.khimicheskikh nauk; LIZOGUB, A.P., inzh.; ZHURBA, A.S., inzh.; PEREKREST, A.N., inzh. LEBEDEVA, L.B., inzh.; BARANOVSKIY, M.I., inzh.

Some ways of more efficient refining of Western Ukrainian paraffin oils. Nauch.zap.Ukrniiproekta no.4:87-112 '61. (MIRA 15:1)
(Ukraine, Western--Petroleum--Refining)

APPROVED FOR RELEASE: 06/20/2000 CIA-RDP86-00513R000930310018-6"

"APPROVED FOR RELEASE: 06/20/2000 CIA-RDP86-00513R000930310018-6

LIZOGUB, A.P., kand.khim.nauk; SKLYAR, V.T., kand.khim.nauk; KRASNOVA, S.I., kand.khim.nauk; Prinimal uchastiye ANTONENKO, D.I.

Determination of the paraffin wax content of petroleum products. Nauch.zap.Ukrniiproekta no.8:18-22 '62. (MIRA 16:1)
(Paraffin wax) (Petroleum products)

APPROVED FOR RELEASE: 06/20/2000 CIA-RDP86-00513R000930310018-6"

"APPROVED FOR RELEASE: 06/20/2000 CIA-RDP86-00513R000930310018-6

LIZOGUB, Anatoliy Pavlovich; KOLUN, Yu.S., doktor khim. nauk, retsenzent

[Spectrum analysis in organic chemistry] Spektral'nyi analiz v organicheskoi khimii. Kiev, Izd-vo "Tekhnika," 1964. 231 p. (MIRA 17:7)

APPROVED FOR RELEASE: 06/20/2000 CIA-RDP86-00513R000930310018-6"

"APPROVED FOR RELEASE: 06/20/2000 CIA-RDP86-00513R000930310018-6

LITOGUL, A.I., Kand. khim. nauk; [illegible], [illegible], [illegible]; [illegible], [illegible].

Analyzer of the lubricant content in paraffin. Neft. i gaz. prom. no.4:56-58 O-D '63. (MIRA 17:12)

1. UkrNIIgiproneft'.

APPROVED FOR RELEASE: 06/20/2000 CIA-RDP86-00513R000930310018-6"

"APPROVED FOR RELEASE: 06/20/2000 CIA-RDP86-00513R000930310018-6

PLIYEV, T.N.; LIZOGUB, A.P.; LEBEDEV, Yu.V.; BROVIN, I.L.

Quantitative determination of aromatic hydrocarbons using infrared spectroscopy. Neft. i gaz. prom. no.4:46-48 O-D '64 (MIRA 18:2)

APPROVED FOR RELEASE: 06/20/2000 CIA-RDP86-00513R000930310018-6"

"APPROVED FOR RELEASE: 06/20/2000 CIA-RDP86-00513R000930310018-6

LIZOGUB, A.F.; GROSHEV, A.Ya.

Photometric method for determining the content of tar in transformer oil. Neft. i gaz. prom. no.2:51-52 Ap-Je '65.

(MIRA 18:6)

APPROVED FOR RELEASE: 06/20/2000 CIA-RDP86-00513R000930310018-6"

"APPROVED FOR RELEASE: 06/20/2000 CIA-RDP86-00513R000930310018-6

VYKHRESTYUK, N.I., kand. khim. nauk; LIZOGUB, A.P., kand. khim. nauk

Mass-spectrometric analysis of the casing-head gases of certain oil fields in the Ukrainian S.S.R. Neft. i gaz. prom. no.2:50-52 Ap-Je '63. (MIRA 17:11)

1. Gosudarstvennyy nauchno-issledovatel'skiy i proyektnyy institut ugol'noy, rudnoy, neftyanoy i gazovoy promyshlennosti UkrSSR.

APPROVED FOR RELEASE: 06/20/2000 CIA-RDP86-00513R000930310018-6"

"APPROVED FOR RELEASE: 06/20/2000 CIA-RDP86-00513R000930310018-6

LIZOGUB, B.G., gazomershchik

Design an universal gas analyzer. Bezop.truda v prom. 2 no.4:37 Ap '58. (MIRA 11:4)

1. Shakhta im. Stalina tresta Voroshilovugol'.
(Eudiometer)

APPROVED FOR RELEASE: 06/20/2000 CIA-RDP86-00513R000930310018-6"

"APPROVED FOR RELEASE: 06/20/2000 CIA-RDP86-00513R000930310018-6

LIZOGUB, B.G., gazomershchik

Review of L.M.Feigin's booklet "Instructions for workers drilling holes." Bezop.truda v prom. 4 no.1:36 Ja '60. (MIRA 13:5)

1. Shakhta im. Stalina tresta Alchevskugol', Donbass.
(Coal mines and mining--Safety measures)
(Feigin, L.M.)

APPROVED FOR RELEASE: 06/20/2000 CIA-RDP86-00513R000930310018-6"

"APPROVED FOR RELEASE: 06/20/2000 CIA-RDP86-00513R000930310018-6

LIZOGUB, I. G., Cand Tech Sci -- (diss) "Problems of increasing the service time of wooden beams." Moscow, 1960. 16 pp; (Ministry of Railroads USSR, Moscow Order of Lenin and Order of Labor Red Banner Inst of Railroad Transport Engineers im I. V. Stalin); 120 copies; price not given; (KL, 50-60, 133)

APPROVED FOR RELEASE: 06/20/2000 CIA-RDP86-00513R000930310018-6"

"APPROVED FOR RELEASE: 06/20/2000 CIA-RDP86-00513R000930310018-6

ZAYTSEV, P.I.; LIZOGUB, I.G.; PETRUKOVICH, A.A., zasl. deyatel' nauki i tekhniki Uz.SSR; SMYKOV, Ye.K.; CHIZHOV, A.T.; YAKOBSON, S.I.; ANDREYEV, G.Y., dots., retsenzent; GRECHUK, V.S., dots., retsenzent; NEKHAY, V.T., red.

[Mechanization of the assembly, laying and exchange of switches] Mekhanizatsiia sborki, ukladki i smeny strelochnykh perevodov. Minsk, Vysshaia shkola, 1964. 69 p. (MIRA 18:3)

1. Leningradskiy institut inzhenerov zheleznodorozhnogo transporta, kafedra "Zheleznodorozhnyy put'" (for Andreyev, Grechuk).

APPROVED FOR RELEASE: 06/20/2000 CIA-RDP86-00513R000930310018-6"

"APPROVED FOR RELEASE: 06/20/2000 CIA-RDP86-00513R000930310018-6

PETRUKOVICH, A.A., kand.tekhn.nauk (Gomel'); TARTAKOVSKIY, R.N., kand.-tekhn.nauk (Gomel'); SMYKOV, Ye.K., kand.tekhn.nauk (Gomel'); LIPSKIY, M.V., dotsent (Gomel'); LIZOGUB, I.G., starshiy prepodavatel' (Gomel'); GANKEVICH, V.I. (Gomel'); PETROV, A.G. (Gomel'); ANAMENSKIY, P.I. (Gomel')

"The railroad track" by G.M.Shakhuniants. Reviewed by A.A. Petrukovich and others. Zhel.dor.transp. 44 no.4:95-96 Ap '62. (MIRA 15:4)

1. Zamestitel' nachal'nika Belorusskoy dorogi (for Gankevich).
2. Nachal'nik sluzhby puti Belorusskoy dorogi (for Petrov).
3. Glavnyy inzh. sluzhby puti Belorusskoy dorogi (for Znamenskiy).

(Railroads--Track)
(Shakhuniants, G. M.)

APPROVED FOR RELEASE: 06/20/2000 CIA-RDP86-00513R000930310018-6"

"APPROVED FOR RELEASE: 06/20/2000 CIA-RDP86-00513R000930310018-6

TUROV, N.P., inzh.; LIZOGUB, I.G., inzh., starshiy prepodavatel'; SMYKOV, Ye.K., kand.tekhn.nauk (st. Priyamino, Belorusskoy dorogi)

Use of tracklaying machines in the replacement of switches. Put. i put.khoz. 6 no.6:14 '62. (MIRA 15:7)

1. Nachal'nik putevoy mashinnoy stantsii No.71, st. Priyamino, Belorusskoy dorogi (for Turov). 2. Belorusskiy insitiut inzhenerov zheleznodorozhnogo transporta (for Lizogub).
(Railroads—Maintenance and repair)

APPROVED FOR RELEASE: 06/20/2000 CIA-RDP86-00513R000930310018-6"

"APPROVED FOR RELEASE: 06/20/2000 CIA-RDP86-00513R000930310018-6

SMYKOV, Ye. K., kand. tekhn. nauk (Gomel') ; LIZOGUB, I.G., inzh. (Gomel')

Adapt the arrangement of switch systems for a mechanized laying. Put' i put. khoz. 6 no.8:22-23 '62. (MIRA 15:10)

(Railroads—Switches)

APPROVED FOR RELEASE: 06/20/2000 CIA-RDP86-00513R000930310018-6"

"APPROVED FOR RELEASE: 06/20/2000 CIA-RDP86-00513R000930310018-6

SMYKOV, Ye.K., dots.; LIZOGUB, I.G., st. prepod.; NEKHAY, V.T., red.

[Design, calculation and graphic work for the course "Tracks, track operation, maintenance and repair"; a textbook for students of higher education schools of railroad transportation studying operations and economics] Raschetno-graficheskie raboty po kursu "Put' i putevoe khoziaistvo;" posobie dlia studentov vysshikh uchebnykh zavedenii zheleznodorozhnogo transporta, obuchaiushchikhsia po ekspluatatsionnoi i ekonomicheskoi spetsial'nostiam. Minsk, Vysshaia shkola, 1963. 49 p. (MIRA 17:9)

APPROVED FOR RELEASE: 06/20/2000 CIA-RDP86-00513R000930310018-6"

"APPROVED FOR RELEASE: 06/20/2000 CIA-RDP86-00513R000930310018-6

PETRUSOVICH, A.A., kand.tekhn.nauk (Gomel'); SMYKOV, Ye.K., kand.tekhn.nauk (Gomel)
LIZOGUB, I.G., inzh. (Gomel')

Assembly of switches in track skeleton assembly points. Put' i put'khoz. 8 no.3:22-24 '64. (MIRA 17:9)

APPROVED FOR RELEASE: 06/20/2000 CIA-RDP86-00513R000930310018-6"

"APPROVED FOR RELEASE: 06/20/2000 CIA-RDP86-00513R000930310018-6

PETRUKOVICH, A.A., kand. tekhn. nauk (Gomel'); SMYKOV, Ye.K., kand. tekhn. nauk (Gomel'); LIZOGUB, I.G., inzh. (Gomel').

Mechanized exchange of switches. Put' i put. khoz. 8 no.11: 13 '64 (MIRA 18:2)

APPROVED FOR RELEASE: 06/20/2000 CIA-RDP86-00513R000930310018-6"

"APPROVED FOR RELEASE: 06/20/2000 CIA-RDP86-00513R000930310018-6

BOYKO, N.; YATSENKO, M.; LIZOGUB, M.; GLUSHKO, Ye.; MARTYNENKO, N.

In the progressive rural savings banks. Fin. SSSR 21 no.12:68-72 D '60. (MIRA 13:12)

1. Kontroler sberegatel'noy kassy sela Medvezh'ye Talayevskogo rayona (for Boyko). 2. Kontroler sberkassy sela Zhigaylovka (for Yatsenko). 3. Kontroler sberkassy sela Oscyevka Krasnopol'skogo rayona (for Lizogub). 4. Kontroler sberkassy sela Khoruzhevki Nedrigaylovskogo rayona (for Glushko). 5. Kontroler sberkassy Akhtyrskogo rayona No.2833/01 (for Martynenko).
(Savings banks)

APPROVED FOR RELEASE: 06/20/2000 CIA-RDP86-00513R000930310018-6"

"APPROVED FOR RELEASE: 06/20/2000 CIA-RDP86-00513R000930310018-6

LIZOGUB, M.S.

Potentiometer checking by the differential method. Izm. tekh. no.1:56-57 Ja-F '55. (MLRA 8:9)
(Potentiometer)

APPROVED FOR RELEASE: 06/20/2000 CIA-RDP86-00513R000930310018-6"

"APPROVED FOR RELEASE: 06/20/2000 CIA-RDP86-00513R000930310018-6

YAGOLA, G.K.; LIZOGUB, M.S.; ZINGERMAN, V.I.; BOGATYREV, Ye.Ye.

A nuclear meter for measuring strong magnetic fields. Izm.tekh. no.6:9-12 N-D '55. (MLRA 9:3)
(Magnetic fields--Measurement) (Nuclear magnetic moments)
(Electronic measurements)

APPROVED FOR RELEASE: 06/20/2000 CIA-RDP86-00513R000930310018-6"

"APPROVED FOR RELEASE: 06/20/2000 CIA-RDP86-00513R000930310018-6

LIZOGUB, M.S.

24(0); 5(4); 6(2) PHASE I BOOK EXPLOITATION SOV/2215

Vsesoyuznyy nauchno-issledovatel'skiy institut metrologii imeni D.I. Mendeleyeva

Referaty nauchno-issledovatel'skikh rabot; sbornik No.2 (Scientific Research Abstracts; Collection of Articles, Nr 2) Moscow, Standartgiz, 1958. 139 p. 1,000 copies printed.

Additional Sponsoring Agency: USSR. Komitet standartov, mer i izmeritel'nykh priborov.

Ed.: S. V. Reshetina; Tech. Ed.: N. A. Kondrat'yeva.

PURPOSE: These reports are intended for scientists, researchers, and engineers engaged in developing standards, measures, and gages for the various industries.

COVERAGE: The volume contains 128 reports on standards of measurement and control. The reports were prepared by scientists of institutes of the Komitet standartov, mer i izmeritel'nykh priborov pri Sovete Ministrov SSSR (Commission on Standards, Measures, and Measuring Instruments under the USSR Council of Ministers). The participating institutes are: VNIIM - Vsesoyuznyy nauchno-issledovatel'skiy metrologii imeni D.I. Mendeleyeva (All-Union Scientific Research Institute of Metrology imeni D.I. Mendeleyev) in Leningrad; Sverdlovsk branch of this institute; VNIIK - Vsesoyuznyy nauchno-issledovatel'skiy institut Komiteta standartov, mer i izmeritel'nykh priborov (All-Union Scientific Research Institute of the Commission on Standards, Measures, and Measuring Instruments), created from MGIMIP - Moskovskiy gosudarstvennyy institut mer i izmeritel'nykh priborov (Moscow State Institute of Measures and Measuring Instruments) October 1, 1955; VNIIFTRI - Vsesoyuznyy nauchno-issledovatel'skiy institut fiziko-tekhnicheskikh i radiotekhnicheskikh izmereniy (All-Union Scientific Research Institute of Physicotechnical and Radio-engineering Measurements) in Moscow; KhGIMIP - Khar'kovskiy gosudarstvennyy institut mer i izmeritel'nykh priborov (Khar'kov State Institute of Measures and Measuring Instruments); and NGIMIP - Novosibirskiy gosudarstvenyy institut mer i izmeritel'nykh priborov (Novosibirsk State Institute of Measures and Measuring Instruments). No personalities are mentioned. There are no references.

Lubentsov, V.F., S.M. Okhotina, and P.A. Shpan'on (KhGIMIP). Apparatus for Checking Tube Voltmeters 101

Rumyantsev, A.S., and Ye. P. Dubovik (VNIIM), and A.A. Chukhlantsev (Sverdlovsk Branch of VNIIM). Developing Methods and Standard Apparatus for Testing Direct-Current Transformers Type I-58 Under Operating Conditions at 70 Kiloamperes 102

Lizogub, M.S., V.I. Zingerman, and Ye. Ye. Bogatyrev (KhGIMIP). Developing and Studying Apparatus for Measuring Magnetic Fields by the Nuclear Magnetic Resonance Method 102

Rudnyy, N.M., A.Z. Veksler, and A.I. Bulanova (Sverdlovsk Branch of VNIIM). Method of Measuring Hysteresis Losses and Eddy Currents in Double Magnetization 104

Card 20/27

APPROVED FOR RELEASE: 06/20/2000 CIA-RDP86-00513R000930310018-6"

"APPROVED FOR RELEASE: 06/20/2000 CIA-RDP86-00513R000930310018-6

27351
S/194/61/000/003/001/046
D201/D306

24.2300

AUTHORS: Yagola, G.K. and Lizogub, M.S.

TITLE: Reproduction of the unit of magnetic field intensity by means of the nuclear magnetic resonance method

PERIODICAL: Referativnyy zhurnal. Avtomatika i radioelektronika, no. 3, 1961, 1, abstract 3 A5 (Tr. Konferentsii po elektr. izmereniyam i priborostr., Kiyev, AN USSR, 1959, 61-67)

TEXT: The existing method of producing magnetic units and of transmitting these units by instruments cannot satisfy all requirements of contemporary science and technology. The utilization of achievements of modern atomic physics and radio-engineering, and in particular, application of the method of nuclear magnetic resonance, makes it possible to accurately measure and to reproduce the magnetic field intensity by means of the gyromagnetic ratio of the proton with the available atomic standards of length and time. The third

Card 1/2

APPROVED FOR RELEASE: 06/20/2000 CIA-RDP86-00513R000930310018-6"

"APPROVED FOR RELEASE: 06/20/2000 CIA-RDP86-00513R000930310018-6

27351
S/194/61/000/003/001/046
D201/D306

Reproduction of the unit...

standard, that of the gyrotropic ratio of the proton, makes it possible to realize a system of measuring units based on atomic constants. A short description is given of the existing system of reproducing magnetic units and the advantages of the system using the atomic constants are enumerated. A short explanation of the nuclear magnetic resonance method, as applied to the measurement of the field, is given together with the description of a nuclear meter for the field intensity measurements. It permits measurement of a homogeneous field within the range 500-24,000 oersted with an accuracy of the order of 0.01%. The circuitry and the external view of the instrument are shown. [Abstracter's note: Complete translation]

Card 2/2

APPROVED FOR RELEASE: 06/20/2000 CIA-RDP86-00513R000930310018-6"

"APPROVED FOR RELEASE: 06/20/2000 CIA-RDP86-00513R000930310018-6

LIZOGUB, N.F.

AID P - 2532

Subject : USSR/Electricity

Card 1/1 Pub. 26 - 16/32

Author : Lizogub, N. F., Eng.

Title : On possible use of flywheel effect as a source of reserve energy

Periodical : Elek sta, 6, 42, Je 1955

Abstract : The article is one in the series of discussions on the subject. The author maintains that in operation an independent motor-generator and an internal combustion motor is not sufficiently reliable as shown by the performance of emergency units installed on movable power plants. One diagram.

Institution : Kiyev Branch, Promenergoproyekt (Office for Design and Planning of Industrial Power Installations)

Submitted : No date

APPROVED FOR RELEASE: 06/20/2000 CIA-RDP86-00513R000930310018-6"

"APPROVED FOR RELEASE: 06/20/2000 CIA-RDP86-00513R000930310018-6

GEL'FMAN, A.Ya.; LIZOGUB, N.P.

To the editors of "Vestnik rentgenologii i radiologii." Vest. rent. i rad. 36 no. 1:77-78 Ja-F '61. (MIRA 14:4)
(RADIOLOGY, MEDICAL)

APPROVED FOR RELEASE: 06/20/2000 CIA-RDP86-00513R000930310018-6"

"APPROVED FOR RELEASE: 06/20/2000 CIA-RDP86-00513R000930310018-6

ALEKSANDROVA, I.L.; VZOROVA, S.I.; BRAANDES, R.I.; GERASIMOV, I.F.; DARINSKIY, Anatoliy Viktorovich; KOMLYAKOVA, V.I.; KOSHELEVA, Ye.S.; LEVINA, B.M.; LIZOGUB, V.K.; RODIONOVA, F.A., red.; TATURA, G., tekhn. red.

[Reader on the economic geography of the U.S.S.R.] Khrestomatiia po ekonomicheskoi geografii BSSR; posobie dlia uchitelei. Moskva, Gos. uchebno-pedagog. izd-vo M-va prosv. RSFSR, 1961. 342 p. (MIRA 14:8)

(Geography, Economic)

APPROVED FOR RELEASE: 06/20/2000 CIA-RDP86-00513R000930310018-6"

"APPROVED FOR RELEASE: 06/20/2000 CIA-RDP86-00513R000930310018-6

GOROSHCHENYA, K.I.; LIZOGUBOV, D.V.; NIKIFOROV, M.I.

Automatic control for a conditioned reflex chamber. Zhur.vys.nerv. deiat. 11 no.3:561-565 My-Je '61. (MIRA 14:7)

1. Medical Institute, Ternopol.
(CONDITIONED RESPONSE) (PHYCHOLOGICAL APPARATUS)

APPROVED FOR RELEASE: 06/20/2000 CIA-RDP86-00513R000930310018-6"

"APPROVED FOR RELEASE: 06/20/2000 CIA-RDP86-00513R000930310018-6

LIZOGUBOV, D.V. [Lyzohubov, D.V.]; NIKIFOROV, M.I.

Automatic feeding trough for the conditioned response chamber. Fiziol. zhur. [Ukr.] 10 no.1:135-137 '64. (MIRA 17:8)

1. Kafedra normal'noy fiziologii Ternopol'skogo meditsinskogo instituta.

APPROVED FOR RELEASE: 06/20/2000 CIA-RDP86-00513R000930310018-6"

"APPROVED FOR RELEASE: 06/20/2000 CIA-RDP86-00513R000930310018-6

GRODSKIY, Ya.S.; LIZOGUBOV, M.A.; LIZOGUBOVA, M.P.

Introduction by industry of metal heating for forging and stamping in nonoxidizing compartment-type furnaces. Kuz.-shtam. proizv. 4 no.8:39-44 Ag '62. (MIRA 15:8)
(Furnaces, Heating)

APPROVED FOR RELEASE: 06/20/2000 CIA-RDP86-00513R000930310018-6"

"APPROVED FOR RELEASE: 06/20/2000 CIA-RDP86-00513R000930310018-6

GRODSKY, [illegible]; [illegible]OV, M.A.; [illegible]OGUBOVA, M.[illegible].

Commercial introduction to the nonscale heating of metal subject to forging and stamping in compartment kilns. Gaz. prom. 7 no.5: 31-35 '62. (MIRA 17:11)

APPROVED FOR RELEASE: 06/20/2000 CIA-RDP86-00513R000930310018-6"

"APPROVED FOR RELEASE: 06/20/2000 CIA-RDP86-00513R000930310018-6

VOLKOV, V.V., podpolkovnik med.zluzhby, kand.med.nauk., LIZOGUBOV, V.N. podpolkovnik med.sluzhby.

Outpatient treatment of ametropia among the troops and the effects of corrections on firing practice. Voen.-med.zhur. no.8:58-62 Ag '56 (MIRA 12:1)

(EYE--ACCOMMODATION AND REFRACTION)
(SHOOTING, MILITARY)

APPROVED FOR RELEASE: 06/20/2000 CIA-RDP86-00513R000930310018-6"

"APPROVED FOR RELEASE: 06/20/2000 CIA-RDP86-00513R000930310018-6

"Clinical Picture and Treatment of Penetrating Wounds of the Cornea During Radiation Sickness of Dogs," by P. V. Preobrazhenskiy, A. P. Belousov, N. S. Dzhavadyan, V. N. Lizogubov, L. F. Orkodashvili, and A. N. Pokrovskiy, [illegible] (head, Prof B. L. Polyak), Military-Medical Order of Lenin Academy imeni S. M. Kirov, Vestnik Oftalmologii, No 3, May/Jun 57, pp 10-13

The purpose of the present research was to study the clinical picture and treatment of penetrating wounds of the cornea of dogs sick with acute radiation sickness under conditions of delayed surgical treatment.

Three series of experiments were performed on 45 dogs: (1) the healing of penetrating wounds of dogs (controls): (2) the healing of penetrating wounds of dogs irradiated by 300 r from radioactive cobalt, but not treated; and (3) the healing of penetrating wounds of dogs irradiated by 300 r from radioactive cobalt and treated with penicillin. The method of surgical intervention for the application of a corneal suture as suggested by the Central Institute of Blood Transfusion was also investigated.

Results proved that (1) there were no clinically visible differences between the control and irradiated dogs during the latent period of acute radiation sickness in respect to the healing of the penetrating wounds of dogs' cornea; and (2) corneal sutures applied on the third day after the infliction of wounds on irradiated dogs were found to be an effective method for the sugical treatment of this type of combined injury. (U)

Sum [illegible]

APPROVED FOR RELEASE: 06/20/2000 CIA-RDP86-00513R000930310018-6"

"APPROVED FOR RELEASE: 06/20/2000 CIA-RDP86-00513R000930310018-6

GRODSKIY, Ya.S.; LIZOGUBOV, M.A.; LIZOGUBOVA, M.P.

Introduction by industry of metal heating for forging and stamping in nonoxidizing compartment-type furnaces. Kuz.-shtam. proizv. 4 no.8:39-44 Ag '62. (MIRA 15:8)
(Furnaces, Heating)

APPROVED FOR RELEASE: 06/20/2000 CIA-RDP86-00513R000930310018-6"

"APPROVED FOR RELEASE: 06/20/2000 CIA-RDP86-00513R000930310018-6

GRODEK [illegible], [illegible]; [illegible]OGUBOV, M.A.; [illegible]OGUBOVA, M.[illegible].

Commercial introduction to the nonscale heating of metal subject to forging and stamping in compartment kilns. Gaz. prom. 7 no.5: 31-35 '62. (MIRA 17:[illegible])

APPROVED FOR RELEASE: 06/20/2000 CIA-RDP86-00513R000930310018-6"

"APPROVED FOR RELEASE: 06/20/2000 CIA-RDP86-00513R000930310018-6

13(2) POL/22-59-8-3/8

AUTHOR: Lizoń, Andrzej, Master of Engineering

TITLE: Remote Guidance of Missiles

PERIODICAL: Przegląd Telekomunikacyjny, 1959, Nr 8, pp 225-234 (POL)

ABSTRACT: The author describes, in general terms, the types of guided missiles and the principles of their guidance. The basic parts of the guiding system are: sighting, computing, relaying commands, and changing directions. Four types of application: air to air; air to ground; ground to air; ground to ground. Targets: movable or stationary. Tracking of movable targets: from inside the missiles or from outside. Tracking from inside: homing missiles, or missiles guided by remote control towards targets sighted from the missiles themselves. Tracking from outside: directing by command link, or beam riding. Guidance towards stationary targets: continuous or partial. Continuous guidance: inertial, gravitational, celestial, radio-navigational, or by earth magnetism. Partially guided are ballistic missiles (in the initial stage only). Each of these terms is explained in non-technical language

Card 1/2

APPROVED FOR RELEASE: 06/20/2000 CIA-RDP86-00513R000930310018-6"