"APPROVED FOR RELEASE: 08/31/2001 CIA-RDP86-00513R001031110001-3

Begin

APPROVED FOR RELEASE: 08/31/2001 CIA-RDP86-00513R001031110001-3"

"APPROVED FOR RELEASE: 08/31/2001 CIA-RDP86-00513R001031110001-3

#F

327

APPROVED FOR RELEASE: 08/31/2001 CIA-RDP86-00513R001031110001-3"

"APPROVED FOR RELEASE: 08/31/2001 CIA-RDP86-00513R001031110001-3

LYASHCH, R. S.

S/138/61/000/005/002/003
A051/A129

26989

15.9200 11.2211

AUTHORS: Radchenko, I. I., Fisher, S. L., Korchmarek, V. V., Kuznetsov, V. L., Bryl', D. G., Lyashch, R. S., Volenina, V. F.

TITLE: Polymerization of butadiene with styrene in emulsion using colophony soap at a temperature of 5°C

PERIODICAL: Kauchuk i rezina, no. 5, 1961, 5 - 11

TEXT: Several polymerization formulations have been developed, of which only a few are suitable for industrial use. Hydrogene peroxide hydrocarbons are usually used as the initiators and various compounds with reducing properties as activators, such as ferrous sulfate, sodium sulfite, etc. Coagulation of the latex is caused by large quantities of electrolytes. Dakaad serves as disperser. Dakaad is a neutralized condensation product of naphthalenesulfoacid with formaldehyde. The higher mercaptanes, e.g., dodecylmercaptane and a mixture of C_{12}-C_6, are used as regulator in the production of butadiene-styrene rubbers. The best-known polymerization formulation is iron-pyrophosphate, where a complex formed from the interaction of potassium pyrophosphate with ferrous sulfate is used as activator. Special attention is drawn to the iron-trilon formulation. An increase in the iron

Card 1/5

APPROVED FOR RELEASE: 08/31/2001 CIA-RDP86-00513R001031110001-3"

"APPROVED FOR RELEASE: 08/31/2001 CIA-RDP86-00513R001031110001-3

content in rubber is contra-indicated, since it causes premature oxidation and aging. A complex formed from the interaction of trilon B and ferrous sulfate is used as activator in the iron-trilon formulation. The purpose of the present work was to study the process of polymerization of butadiene with styrene carried out according to the iron-trilon and iron-pyrophosphate formulations, and to perfect these formulations for industrial use. Colophony soap and its mixture with fatty acid soap were used as emulsifiers. The scheme of the mechanism of the action of the system iron-trilon complex-hydroperoxide-rongalite is given:

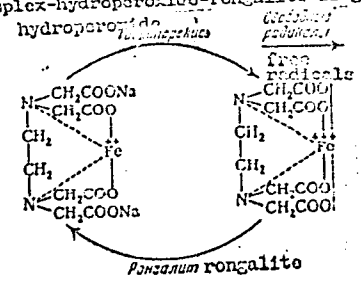

APPROVED FOR RELEASE: 08/31/2001 CIA-RDP86-00513R001031110001-3"

"APPROVED FOR RELEASE: 08/31/2001 CIA-RDP86-00513R001031110001-3

Polymerization of butadiene with styrene in... 26989 S/138/61/000/005/002/006 A051/A129

	SKS-30ARK	SKS-30ARK-20
tear resistance, kg/cm²	281	255
relative elongation, %	680	550
residual elongation, %	24	22
elasticity, %	34	29

The iron-pyrophosphate formulation (report of Giprokauchuk no. 010017, 010851, 010889, 1955-56) was further investigated. For the polymerization of butadiene with styrene the following formulation was used: butadiene ... 70, styrene ... 30, drosinate 731 ... 4.5, hydroperoxide n-methane ... 0.08, $FeSO_4 \cdot 7H_2O$ ... 0.16, $K_4P_2O_7$ ... 0.18, sodium ethylenediaminotetraacetate (versen, trilon B) ... 0.01, daksad ... 0.15, $Na_3PO_4 \cdot 12H_2O$ ... 0.5, tertiary dodecylmercaptane (sulfol D-8) ... 0.18, water ... 200 (in w.p.). It is pointed out that with an increase in the regulating action of the diproxide the rate of polymerization dropped almost by 1.5 times. When using the monohydroperoxide of diisopropylbenzene the duration of the polymerization was 12 - 14 hrs, when replacing it by hydroperoxide of 1,1-diphenylethane 9 - 10 hrs. On the basis of the conducted work the formulation of iron-pyrophosphate using potassium soap of colophony was developed. This formulation was tested under pilot plant conditions (report of the VNIISK-NIIISK, no. 013094,

Card 4/5

APPROVED FOR RELEASE: 08/31/2001 CIA-RDP86-00513R001031110001-3"

"APPROVED FOR RELEASE: 08/31/2001 CIA-RDP86-00513R001031110001-3

26989 S/138/61/000/005/002/006
A051/A129

Polymerization of butadiene with styrene in...

1960). The prepared experimental butadiene-styrene rubber had the following indices: content of free colophony acids, % ... 5.8, content of bound colophony acids, % ... 0.25, content of iron, % ... 0.02, defoe hardness, G ... 550, tear resistance, kg/cm^2 ... 269, relative elongation, % ... 650, residual elongation, % ... 23, elasticity, % ... 29. In the conclusion the authors recommend sodium dimethyldithiocarbamate to be used as the interrupter of polymerization. There are 9 graphs and 5 references: 2 Soviet-bloc, 3 non-Soviet-bloc. The references to the English-language publications read as follows: R. Frank, J. Polym. Sci., 3, no. 1, 39 (1948); L. Howland, Rubb. World, 130, no. 5, 647 (1954); R. Brown et al., Ind. Eng. Chem., 46, no. 5, 1073 (1954).

ASSOCIATION: Vsesoyuznyy nauchno-issledovatel'skiy institut sinteticheskogo kauchuka im. S. V. Lebedeva (All-Union Scientific Research Institute of Synthetic Rubber im. S. V. Lebedev)

Card 5/5

APPROVED FOR RELEASE: 08/31/2001 CIA-RDP86-00513R001031110001-3"

"APPROVED FOR RELEASE: 08/31/2001 CIA-RDP86-00513R001031110001-3

L 17100-63 EPR/EWP(j)/EPF(c)/EWT(m)/BDS AFFTC/ASD Ps-4/Pc-4/
Pg-4 RM/WW

S/0138/63/000/007/0004/0006

ACCESSION NR: AP3004251

74
72

AUTHORS: Radchenko, I. I.; Lyashch, R. S.

TITLE: The regulatory and activating effect of Captax and Altax on the polymerization process of butadiene with styrene in emulsions (work completed in 1954)

SOURCE: Kauchuk i rezina, no. 7, 1963, 4-6

TOPIC TAGS: polymerization, regulator, activator, Captax, Altax, disulfide, mercaptane

ABSTRACT: The effect of various concentrations of excess sodium hydroxide on polymerization by Captax and Altax were investigated. Polymerization was conducted at 50C in rotating ampules, into which were introduced solutions of the initiator, potassium persulfate, and of the emulsifier, either Nekal or sodium stearate, followed by styrene with the regulator Captax or Altax, and butadiene. In the presence of 0.1% Captax an increase in free alkali from 0 to 0.2% caused the extent of polymerization to rise from 30% to 62%, while 0.3% Captax resulted in a drastic reduction in polymerization. Experiments conducted with 0.05% to 0.3% Captax in an identical excess alkalinity range of 0.05-0.1% resulted in a drop of deformation hardness of the polymer from 5900-4600 to 300-200. It was found that Altax also acts as an energetic regulator of polymerization at a low excess alkali range of

Card 1/3 2

APPROVED FOR RELEASE: 08/31/2001 CIA-RDP86-00513R001031110001-3"

"APPROVED FOR RELEASE: 08/31/2001 CIA-RDP86-00513R001031110001-3

L 17100-63

ACCESSION NR: AP3004251

2

0.05%-0.12%. The findings of the laboratory tests were substantiated by experiments conducted in a 40-liter autoclave for an average period of 35 hours, where 0.25% of either Captax or Altax were added by portions at several intervals. Rubbers of an average 50% polymerization extent were obtained with a deformation hardness of 2500-3200. It was also observed that the emulsifier Nekal did not affect the rate of polymerization by Captax, but sodium stearate activates polymerization by both Captax and Altax. Orig. art. has: 4 charts and 2 tables.

ASSOCIATION: Vsesoyuzny*y nauchno-issledovatel'skiy institut sinteticheskogo kauchuka im. S. V. Lebedeva (All-Union Scientific Research Institute of Synthetic Rubber)

SUBMITTED: 00 DATE ACQ: 21Aug63 ENCL: 01

SUB CODE: CH NO REF SOV: 002 OTHER: 001

Card 2/32

APPROVED FOR RELEASE: 08/31/2001 CIA-RDP86-00513R001031110001-3"

"APPROVED FOR RELEASE: 08/31/2001 CIA-RDP86-00513R001031110001-3

80889

S/126/60/009/06/017/025
E073/E335

18.6100

AUTHORS: Mel'nichuk, P.I., Klimenko, V.N. and Lyashchenko, A.B.

TITLE: Determination of the Modulus of Elasticity of Chromium Carbide-nickel Alloys

PERIODICAL: Fizika metallov i metallovedeniye, 1960, Vol 9, Nr 6, pp 918 - 921 (USSR)

ABSTRACT: The authors state that although alloys based on chromium-carbide have useful properties and many applications (Refs 1-4) the properties of this compound have not been studied sufficiently. The present work aimed at providing data on the modulus of elasticity, which are needed for calculating interatomic bond strength (Ref 5) and high-temperature and other strength properties of machine parts (Ref 6). Alloys were prepared from chromium carbide (obtained as described in Ref 1) containing 86.5% Cr, 13.3% C_{total} and 0.3% C_{free}. Six mixtures with 5, 10, 15, 20, 30 and 40% Ni were prepared by grinding the components in ethyl alcohol; 90% of the product was under 5 μ. 100 x 6 x 6 mm test pieces were compressed and sintered at 1 200 - 1 400 °C in a hydrogen atmosphere

Card1/3

APPROVED FOR RELEASE: 08/31/2001 CIA-RDP86-00513R001031110001-3"

"APPROVED FOR RELEASE: 08/31/2001 CIA-RDP86-00513R001031110001-3

80889

S/126/60/009/06/017/025
E073/E335

Determination of the Modulus of Elasticity of Chromium Carbide-nickel Alloys

and with a covering of alumina powder. Two phase alloys were always obtained (Figure 1). The modulus of elasticity was determined within 0.5% by a dynamic method (Ref 7) as $4/(981 \times 10^3)$ of the product of the squares of length (in cm) and natural frequency of longitudinal vibration (c/s) and the density (g/cm^3). The frequency was determined with an apparatus described by Frantsevich and Mel'nichuk (Ref 9) and the density hydrostatically. Density and porosity values are tabulated. The 10% Ni alloy had an anomalously high porosity and its modulus of elasticity lay below the linear plot against nickel content obtained for the other alloys (Fig 2). Based on this linearity the authors propose the following equation for calculating the modulus of elasticity E_c of Cr_3C_2-Ni alloys: $E_c = E_K (1 - 0.0061 K)$, K is the weight % of nickel and E_K the value of the modulus for 0% Ni, found by extrapolating Figure 2 to 0% Ni to be 3.8×10^6 kg/cm^2. They point out the limitations of this equation.

Card2/3

APPROVED FOR RELEASE: 08/31/2001 CIA-RDP86-00513R001031110001-3"

"APPROVED FOR RELEASE: 08/31/2001 CIA-RDP86-00513R001031110001-3

80889

S/126/60/009/06/017/025
E073/E335

Determination of the Modulus of Elasticity of Chromium Carbide-nickel Alloys

There are 2 figures, 1 table and 11 references, 6 of which are Soviet, 1 Czech, 1 English and 3 German.

ASSOCIATION: Institut metallkeramiki i spetsial'nykh splavov AN USSR (Cermets and Special Alloys Institute of the Ac.Sc. Ukrainian SSR)

SUBMITTED: January 23, 1960

Card 3/3

APPROVED FOR RELEASE: 08/31/2001 CIA-RDP86-00513R001031110001-3"

"APPROVED FOR RELEASE: 08/31/2001 CIA-RDP86-00513R001031110001-3

S/032/60/026/05/41/063
B010/B008

AUTHORS: Mel'nichuk, P. I., Lyashchenko, A. B.

TITLE: Device for the Determination of the Modulus of Elasticity at Increased Temperatures

PERIODICAL: Zavodskaya laboratoriya, 1960, Vol. 26, No. 5, pp. 619-620

TEXT: A device which allows determinations of the modulus of elasticity at 20-1200°C in vacuum of from 5.10^{-5} to 1.10^{-4} mm Hg is described. The block scheme and operation principle of the device has already been described (Ref. 1). The heating chamber (Fig.) which has a size of 240 × 240 × 380 mm and is made of sheet steel is described. The sample is held horizontally in the center by a molybdenum holder and the 2 capacity pickups are installed at both ends of the sample on 2 axially adjustable rods. The vacuum system of the device contains 2 diffusion pumps of type TsVL-100 and one rough-vacuum pump of type RVN-20. The pressure is controlled by a vacuometer which is connected with a manometric ionization tube of type LM-2. The temperature is measured by

Card 1/2

APPROVED FOR RELEASE: 08/31/2001 CIA-RDP86-00513R001031110001-3"

"APPROVED FOR RELEASE: 08/31/2001 CIA-RDP86-00513R001031110001-3

Device for the Determination of the Modulus of Elasticity at Increased Temperatures

S/032/60/026/05/41/063
B010/B008

thermocouples. The design of the chamber allows a simultaneous determination of the natural frequency of the longitudinal oscillations of the sample and of the increase in length of the sample. There are 1 figure and 1 Soviet reference.

ASSOCIATION: Institut metallokeramiki i spetsial'nykh splavov Akademii nauk USSR (Institute of Powder Metallurgy and Special Alloys of the Academy of Sciences of the UkrSSR)

Card 2/2

APPROVED FOR RELEASE: 08/31/2001 CIA-RDP86-00513R001031110001-3"

"APPROVED FOR RELEASE: 08/31/2001 CIA-RDP86-00513R001031110001-3

S/137/62/000/004/038/201
A006/A101

15.2240

AUTHORS: Lyashchenko, A. B., Mel'nichuk, P. I., Frantsevich, I. N.

TITLE: The normal modulus of elasticity of some refractory compounds

PERIODICAL: Referativnyy zhurnal, Metallurgiya, no. 4, 1962, 39, abstract 4G256 ("Poroshk. metallurgiya", 1961, no. 5, 10 - 19, English summary)

TEXT: The dynamical method was used to measure E of a number of refractory compounds ($MoSi_2$, Mo_3Si, $ZrSi_2$, $TiSi_2$, VC, TiC, TiB_2, W_2C). E was measured on specimens of different porosity and these data were extrapolated to zero porosity. An empirical formula is proposed, describing the effect of porosity on E. The method is described of manufacturing the specimens. The temperature dependence of E is determined for TiC and Mo_3Si at up to 1,000°C. The values of the thermal coefficient of E, the mean square displacements of atoms, and characteristic temperatures are evaluated. The nature of these quantities is discussed. There are 12 references.

R. Andriyevskiy

[Abstracter's note: Complete translation]

Card 1/1

APPROVED FOR RELEASE: 08/31/2001 CIA-RDP86-00513R001031110001-3"

"APPROVED FOR RELEASE: 08/31/2001 CIA-RDP86-00513R001031110001-3

32652
S/126/61/012/005/005/028
E193/E383

18.1285 1418 1496 1555

AUTHORS: Glazova, V.V., Kurnakov, N.N. and Lyashchenko, A.B.

TITLE: Study of atomic interaction in titanium-zirconium-tin solid solutions

PERIODICAL: Fizika metallov i metallovedeniye, v.12, no. 5, 1961, 656 - 659

TEXT: The object of the present investigation was to find an explanation of the earlier-established fact that the combined effect of Zr and Sn additions on the strength of Ti is greater than the effect of each of these alloying additions introduced separately. To this end, the concentration-dependence of the elastic modulus, E , and thermal expansion coefficient, α , of binary and ternary alloys in the Ti corner of the Ti-Zr-Sn system was determined. The experimental alloys were prepared in an argon-arc furnace, each ingot of approximately 100 g being remelted 10 to 50 times to ensure homogeneity of the material. The composition of the alloys is given in Table 1. A dynamic method was used to determine E , α in the 20 - 300 °C range having been determined by dilatometric measurements. The

Card 1/3

APPROVED FOR RELEASE: 08/31/2001 CIA-RDP86-00513R001031110001-3"

"APPROVED FOR RELEASE: 08/31/2001 CIA-RDP86-00513R001031110001-3

characteristic temperatures, Θ, of the alloys was also calculated from the formula:

$$\Theta = \frac{1.6818 \cdot 10^3 \sqrt{E}}{A^{1/3} d^{1/6}}$$

where A is the density of the alloy and
d the mean atomic weight.

The results are tabulated and reproduced graphically. In Fig. 1 E ($\times 10^{-6}$, kg/cm^2 - lefthand scale) and Θ ($^{\circ}$K - righthand scale) of Ti-Zr alloys are plotted against the Zr content (%). In Fig. 2, E of Ti-Zr-Sn alloys is plotted against the Sn content (%), Curves 1-4 relating to alloys with a constant Zr content of 0, 5 10 and 20% The concentration dependence of Θ of the ternary alloys is illustrated in the same manner in Fig. 3. It was concluded that the pronounced increase in E (and a corresponding decrease in α) brought

APPROVED FOR RELEASE: 08/31/2001 CIA-RDP86-00513R001031110001-3"

"APPROVED FOR RELEASE: 08/31/2001 CIA-RDP86-00513R001031110001-3

32652
S/126/61/012/005/005/028
E193/E383

Study of atomic interaction ....

about by addition of Sn to the Ti-20% Zr alloy is a result of chemical interaction between the alloying additions which causes a decrease in atomic mobility and an increase in the resistance of the alloy to plastic deformation.
There are 3 figures, 2 tables and 10 references: 8 Soviet-bloc and 2 non-Soviet-bloc.

ASSOCIATIONS: Institut metallurgii AN SSSR im. A.A. Baykova (Institute of Metallurgy of the AS USSR im. A.A. Baykov)
Institut metallokeramiki i spetsial'nykh splavov AN UkrSSR (Institute of Powder Metallurgy and Special Alloys of the AS UkrSSR)

SUBMITTED: March 6, 1961

Card 3/3

APPROVED FOR RELEASE: 08/31/2001 CIA-RDP86-00513R001031110001-3"

"APPROVED FOR RELEASE: 08/31/2001 CIA-RDP86-00513R001031110001-3

LYASHCHENKO, A. B.; FRANTSEVICH, I. N.; ZHURAKOVSKIY, Ye. A.

"Elastic properties and differences in the electronic structure of some high melting compounds made by powder metallurgy."

Report presented at the Conference on Powder Metallurgy, Krakow, Poland, 19-21 Sept 63.

APPROVED FOR RELEASE: 08/31/2001 CIA-RDP86-00513R001031110001-3"

"APPROVED FOR RELEASE: 08/31/2001 CIA-RDP86-00513R001031110001-3

L 45329-66 EWT(d)/EWP(e)/EWT(m)/EWP(t)/ETI/EWP(w) IJP(c) JD/WW/JG/EM/AT/WH

ACC NR: AP6025941 SOURCE CODE: UR/0226/66/000/007/0073/0075

AUTHOR: Frantsevich, I. N.; Lyashchenko, A. B.

ORG: Institute for Problems in the Science of Materials AN UkrSSR (Institut problem materialovedeniya AN USSR)

TITLE: Young's modulus of carbides of some transition metals

SOURCE: Poroshkovaya metallurgiya, no. 7, 1966, 73-75

TOPIC TAGS: Young modulus, carbide, transition metal

ABSTRACT: The article gives the values of Young's modulus of carbides of titanium, vanadium, chromium, zirconium, niobium, molybdenum, and tungsten obtained on samples with a composition similar to that of the stoichiometric. The values of Young's modulus are determined for the compact state. It was found that Young's modulus of carbides depends on the quality of s + d electrons in the metal atom in carbides of the Ti, V, Cr, and Zr, Nb, Mo series. It is assumed

Card 1/2

APPROVED FOR RELEASE: 08/31/2001 CIA-RDP86-00513R001031110001-3"

"APPROVED FOR RELEASE: 08/31/2001 CIA-RDP86-00513R001031110001-3

L 45329-66

ACC NR: AP6025941

that a similar dependence will take place in carbides of the W, Ta, Hf series, permitting the estimate of the Young modulus of tantalum and hafnium carbides. Orig. art. has: 2 figures and 2 tables. [Based on authors' abstract.] [KS]

SUB CODE: 11, 20/ SUBM DATE: 26Sep65/ ORIG REF: 007/

Card 2/2

APPROVED FOR RELEASE: 08/31/2001 CIA-RDP86-00513R001031110001-3"

"APPROVED FOR RELEASE: 08/31/2001 CIA-RDP86-00513R001031110001-3

SKLOVSKIY, A.M.; LYASHCHENKO, A.I.; VO OKH. A.G.

Independence of the Glukhovskiy horizon and its gas and oil potentials in the Northern Caspian Sea region. Neftegaz. geol. i geofiz. no.6: 25-30 '63. (MIRA 17:10)

1. Nauchno-issledovatel'skaya laboratoriya geologicheskikh kriteriyev otsenki perspektiv neftegazonosnosti i Vsesoyuznyy nauchno-issledovatel'skiy geologorazvedochnyy neftyanoy institut.

APPROVED FOR RELEASE: 08/31/2001 CIA-RDP86-00513R001031110001-3"

"APPROVED FOR RELEASE: 08/31/2001 CIA-RDP86-00513R001031110001-3

LYASHCHENKO, A.M.

Some characteristics of the formation of the cross-section types in the Middle Paleozoic of southern Fergana. Dokl. AN SSSR 163 no.6:1452-1454 Ag '65. (MIRA 18:8)

1. Submitted May 5, 1965.

APPROVED FOR RELEASE: 08/31/2001 CIA-RDP86-00513R001031110001-3"

"APPROVED FOR RELEASE: 08/31/2001 CIA-RDP86-00513R001031110001-3

LYASHCHENKO, B.G.; LITVIN, D.F.; PUZEY, I.M.; ABOV, Yu.G.

Neutron diffraction examination of nickel-iron alloys of the permalloy group. Kristallografiia 2 no.1:64-73 '57. (MLRA 10:7)

1. TSentral'nyy nauchno-issledovatel'skiy institut chernoy metallurgii.

(Permalloys) (Neutrons--Diffraction)

APPROVED FOR RELEASE: 08/31/2001 CIA-RDP86-00513R001031110001-3"

"APPROVED FOR RELEASE: 08/31/2001 CIA-RDP86-00513R001031110001-3

70-3-2-3/26

AUTHORS: ~~Lyashchenko, B.G.~~, Litvin, D.F., Puzey, I.M., Abov, Yu.G. and Golovkin, V.S.

TITLE: Investigation of the Defect Structure of Metallic Monocrystals by a Neutron Diffraction Method (Izucheniye defektnoy struktury metallicheskikh monokristallov neytronograficheskim metodom)

PERIODICAL: Kristallografiya, 1958, Vol.3, Nr 2, pp 148 - 154 (USSR).

ABSTRACT: A neutronographic investigation of the fragmentary structure of single crystals of nickel alloys has been made and the effect of this structure on the character and intensity of the scattered neutron beams is demonstrated. A short review of work on the neutronographic investigation of the structures of synthetic single crystals is included. One of the consequences of the low absorption of neutrons in most materials is the importance of secondary extinction. Bacon has shown that, for X-ray formulae to apply, the dimensions of a single mosaic crystal should be proportional to the width of the Darwin curve (angular distribution of the mosaic blocks). For KBr with a Darwin width of less than 3' this limiting thickness is 1.5 - 2 mm. The effect of volume defects of dimensions greater than those of the mosaic blocks is of interest and

Card1/3

APPROVED FOR RELEASE: 08/31/2001 CIA-RDP86-00513R001031110001-3"

"APPROVED FOR RELEASE: 08/31/2001 CIA-RDP86-00513R001031110001-3

70-3-2-3/26

Investigation of the Defect Structure of Metallic Monocrystals by a Neutron Diffraction Method

leads to the break-up of diffraction spots into small patches. 14 specimens of monocrystals have been examined. They were alloys of Ni and Fe with different quantities of Mo, Cr and Cu. The spherical specimens were etched with a mixture of nitric and hydrochloric acids and vacuum annealed for 4 hours at 750 °C. The orientation of the crystals could be seen from the Laue patterns. Finer orientation was achieved with a magnetic method to 1-2°. The spheres were finally polished so that the maximum differences in diameter were less than 1 μ in 7-12 mm. The axes were marked on the surface with gold spots electrolytically deposited. The composition was checked on sliced-up specimens. Investigations were carried out on the single-crystal neutron spectrometer of the Ac.Sc. USSR, the method being similar to that used by Lowde. The accuracy of the intensity measurements was about 1%.
Most specimens showed anomalous reflection curves. Contour plots were made of various reflections. Diagrams for the 020 reflection of two Ni-Fe alloys are reproduced. For one specimen, there was a difference amounting to a factor of 2.5 between the intensities of reflections hkl and $\overline{hkl}$. Investigating this effect, a small slit was scanned across the diffracted

Card2/3

APPROVED FOR RELEASE: 08/31/2001 CIA-RDP86-00513R001031110001-3"

"APPROVED FOR RELEASE: 08/31/2001 CIA-RDP86-00513R001031110001-3

70-3-2-3/26

Investigation of the Defect Structure of Metallic Monocrystals by a Neutron Diffraction Method

beam. The effect was shown not to be due to multiple diffraction. X-ray investigation of the specimen disclosed appreciable boundary regions separating fragments disoriented by up to 20'. This caused the reflections $\bar{2}\bar{2}2$, $\bar{2}22$, $\bar{2}\bar{2}2$ and $\bar{2}22$ to come only from one fragment and $\bar{2}\bar{2}\bar{2}$, $\bar{2}2\bar{2}$, $2\bar{2}\bar{2}$ and $22\bar{2}$ to come from the other.

There are 5 figures, 1 table and 13 references, 4 of which are Soviet, 9 English.

ASSOCIATION: Institut metallofiziki (Institute of Metal Physics)

SUBMITTED: June 3, 1957

Card 3/3

APPROVED FOR RELEASE: 08/31/2001 CIA-RDP86-00513R001031110001-3"

"APPROVED FOR RELEASE: 08/31/2001 CIA-RDP86-00513R001031110001-3

SOV/137-58-9-19764

Translation from: Referativnyy zhurnal, Metallurgiya, 1958, Nr 9, p 236 (USSR)

AUTHORS: Lyashchenko, B.G., Litvin, D.F., Puzey, I.M., Abov, Yu.G.

TITLE: Neutron-diffraction Study of Iron-nickel Alloys of the Permalloy Class (Neytronograficheskoye issledovaniye zhelezonikilevykh splavov permalloynogo klassa)

PERIODICAL: Sb. tr. In-t metalloved. i fiz. metallov Tsentr. n.-i. in-ta chernoy metallurgii, 1958, Vol 5, pp 397-418

ABSTRACT: Bibliographic entry. Ref. RZhMet, 1958, Nr 4, abstract 8080

1. Iron-nickel alloys--Electron diffraction analysis

Card 1/1

APPROVED FOR RELEASE: 08/31/2001 CIA-RDP86-00513R001031110001-3"

"APPROVED FOR RELEASE: 08/31/2001 CIA-RDP86-00513R001031110001-3

LYASHCHENKO, B.G.

Neutron structure analysis of metals and alloys. Zav. lab. 24 no.5:585-597 '58. (MIRA 11:6)
(Neutrons--Diffraction)
(Metallography)

APPROVED FOR RELEASE: 08/31/2001 CIA-RDP86-00513R001031110001-3"

"APPROVED FOR RELEASE: 08/31/2001 CIA-RDP86-00513R001031110001-3

S/137/62/000/005/115/150
A006/A101

AUTHOR: Lyashchenko, B. G.

TITLE: On the possibility of localizing carbon atoms in the crystal lattice of austenite by the method of neutron-structural analysis

PERIODICAL: Referativnyy zhurnal, Metallurgiya, no. 5, 1962, 93, abstract 5I572 ("Sb. tr. In-t metalloved. i fiz. metallov Tsentr. n.-i. in-ta chernoy metallurgii", 1959, v. 6, 378 - 380)

TEXT: Carbon atoms dissolved in gamma-iron occupy vacancies in a statistic way. Such spots in a face-centered lattice are octahedral and tetrahedral pores. It is asserted that the use of neutron diffraction makes it possible to locate carbon atoms in the crystal lattice of austenite, since the amplitudes of nuclear scattering of neutrons by iron and carbon are close to each other. The part of C is in this case reduced to changes in the intensities of reflections from the austenite lattice, formed by the metal atoms. It is assumed that localization of C atoms in the crystal lattice of austenite by the method of neutron-structural analysis is an entirely real problem which will be solved in the near future. [Abstracter's note: Complete translation] I. Nikitina

Card 1/1

APPROVED FOR RELEASE: 08/31/2001 CIA-RDP86-00513R001031110001-3"

"APPROVED FOR RELEASE: 08/31/2001 CIA-RDP86-00513R001031110001-3

ALIKHANOV, R. A., Institute for Physical Problems imeni S. I. Vavilov, Academy of Sciences USSR, Moscow - "Neutronographic study of $NiCO_3$" (Section J-2)

BELOV, N. V., Associate Director, Institute of Crystallography, Academy of Sciences USSR, Moscow - "Magnetic (ferromagnetic) space group symmetry" (C-6)

BELOV, N. V., KERONOVA, N. N., Both Institute of Crystallography, Academy of Sciences USSR, Moscow, DONNAY, J. D. H., Johns Hopkins University, Baltimore, Md., and DONNAY, G. H., Geophysical Laboratory, Carnegie Institution, Washington, D. C. - "Tables of magnetic space groups, II. Special positions" (C-6)

BOROVIK-ROMANOV, A. S., Institute for Physical Problems imeni S. I. Vavilov, Academy of Sciences USSR - "Antiferromagnetic resonance in carbonated of transition elements" [sic] (M-16)

BOROVIK-ROMANOV, A. S., ALEKSANYAN, G. G., KUDASHEVSKIY, G. Ye. - "Piezomagnetic effect in antiferromagnets" (M-18)

KONDORSKIY, Ye. I., Head, Magnetism Laboratory, Moscow State University - (1) "The electrical and galvanomagnetic properties of thin films at very low temperatures" (M-5); (2) "On the connection between the spontaneous magnetization of current carriers and the Nernst-effect in ferromagnetic metals" (M-4); "The exchange interaction and magneto-effects in ferrite-garnets" (M-15)

USSR (cont.)

LOBACHEV, B., and VAYNSHTEYN, B., Institute of Crystallography, Moscow - "Electron diffraction study of thiourea CO $(NH_2)_2$"

LYASHENKO, B. G., Central Scientific Research Institute of Metallurgy, Moscow - "The problem of the influence of spontaneous magnetization on crystal structure and phase state of alloys" (N-8)

LYASHENKO, B. G., LIVITIN, D. F., PUZEY, I. M., AROV, Yu. G. Central Scientific Research Institute of Metallurgy, Moscow - "Neutron diffraction investigation of order-disorder in the alloys 'Ferrum-nickel and ferrum-cobalt'" (J-1)

OZEROV, R. P., ZHDANOV, V. S., ZHDANOV, G. S., Scientific Research Physico-Chemical Institute imeni L. Ya. Karpov, Moscow - "Neutron diffraction study of the structure of solid hydrogen and deuterium" (C-8)

FINSKER, Z. G., Institute of Crystallography, Academy of Sciences USSR, Moscow - "Results and progresses of electron diffraction analysis" (C-11)

PUZEY, I. M., Scientific Research Institute of Metallurgy, Moscow - "Magnetic anistropy in monocrystals of Ni-Fe-Co alloys" (M-9)

SHUR, Yakov S., Scientific Research Institute of Metallurgy, Moscow - "Some problems of the physics of high coercive materials" (M-17)

SMOLENSKIY, G. A., Institute of Semiconductors, Leningrad - "Some investigations of non-metallic ferro and antiferromagnetics" (M-13)

VAYNSHTEYN, B. K., Institute of Crystallography, Academy of Sciences USSR - "Development of electron diffraction method" (C-11)

YAMZIN, I. I., BELOV, N. V., NOZIK, Y. Z., Institute of Crystallography, Moscow - "Atomic and magnetic structures of magnese ferrite" (J-2)

VONSOVSKIY, S. V., Institute of the Physics of Metals, Academy of Sciences USSR, Sverdlovsk. A member of the IUPAP Commission on Magnetism. See paragraph 1 of Comment for a complete listing of members of the Commission. "Some investigations of Soviet physics on the theory of ferromagnetism for the last years" (Invited paper. Section M-11)

paper to be submitted for the IUPAP Intl. Conference on Magnetism and Crystallography, Kyoto, Japan, 25-30 Sep 1961

APPROVED FOR RELEASE: 08/31/2001 CIA-RDP86-00513R001031110001-3"

"APPROVED FOR RELEASE: 08/31/2001 CIA-RDP86-00513R001031110001-3

25889
S/070/61/006/004/001/007
E021/E406

18.1000

AUTHOR: Lyashchenko, B.G.

TITLE: The question of the "zero matrix" in neutron radiography

PERIODICAL: Kristallografiya, 1961, Vol.6, No.4, pp.503-506

TEXT: Examples are given of the use of the method of "zero matrix" in neutron radiography for the structural analysis of alloys. The method is based upon the fact that disordered solid solutions of the substitutional type, containing elements or isotopes with scattering amplitudes of different sign can have a zero resultant structural amplitude, not giving their own diffraction spectra. If a third element is dissolved in such a zero matrix, its diffraction spectrum is obtained in the purest form. The method can be applied to the study of materials at high pressure. The walls of the bomb or chamber used to obtain the high pressure are constructed of a material with zero matrix. The possibility of phase transformations at high pressure can be studied. Lead and other materials at pressures of the order of 50000 kg/cm^2 can be investigated. Alloys giving a zero matrix

Card 1/3

APPROVED FOR RELEASE: 08/31/2001 CIA-RDP86-00513R001031110001-3"

"APPROVED FOR RELEASE: 08/31/2001 CIA-RDP86-00513R001031110001-3

25889
The question of the "zero matrix".. S/070/61/006/004/001/007
E021/E406

are, for example, 62% Ti - 38% Zr and 95% V-5% Fe. If the alloys have sufficient strength, they can be used for the high pressure chambers. It is possible to obtain a "zero matrix" from mixtures of isotopes, e.g. 63% H - 37% D, 79.5% natural Li-20.5% Li^6. it is expected that isotopic mixtures could be prepared with a zero matrix from many elements which in their natural form have low positive signs, e.g. Si, Cr, Cu, Zn, G, Zr, Mo. Such a zero matrix could be used for studying the effects of magnetic scattering and scattering in atomic mixtures. The "zero matrix" method can also be used in the study of concentration inhomogeneities such as "Guinier-Preston" zones. There are 1 table and 9 references: 5 Soviet and 4 non-Soviet. The four references to English language publications read as follows:

S.S.Sidhu, L.Heaton, M.H.Mueller, J.Appl.Phys.,30,9,1323,1959;
P.W.Bridgman. Proc.Amer.Acad.Arts and Sci., 76,1,1; 76,1,9,45;
R.D.Lowde, Rev.Mod.Phys., 30, 1, 1958;
R.J.Weiss, Phys.Rev., 83,2,379,1951.

ASSOCIATION: Institut metallovedeniye i fizika metallov
(Institute of Metal Science and Physics of Metals)

Card 2/3

APPROVED FOR RELEASE: 08/31/2001 CIA-RDP86-00513R001031110001-3"

"APPROVED FOR RELEASE: 08/31/2001 CIA-RDP86-00513R001031110001-3

LYASHCHENKO, B.G.; LITVIN, D.F.; ABOV, Yu.G.

Neutron diffraction study of iron-cobalt alloys. Kristallografiia 6 no.4:553-559 Jl-Ag '61. (MIRA 14:8)

1. Institut metallovedeniya i fiziki metallov.
(Neutron diffraction crystallography) (Iron-cobalt alloys)

APPROVED FOR RELEASE: 08/31/2001 CIA-RDP86-00513R001031110001-3"

"APPROVED FOR RELEASE: 08/31/2001 CIA-RDP86-00513R001031110001-3

39751
S/126/62/014/001/003/018
E032/E414

24.6300
24.6500

AUTHORS: Goman'kov, V.I., Litvin, D.F., Loshmanov, A.A., Lyashchenko, B.G.

TITLE: Neutron diffraction studies of Ni-Cr alloys

PERIODICAL: Fizika metallov i metallovedeniye, v.14, no.1, 1962, 26-29

TEXT: The authors report the design of a neutron diffractometer which can be used both with single crystals and polycrystalline materials. The neutron beam is collimated by a multi-slit collimator and has a divergence of about 24' at an intensity of 10^8 to 10^9 neutron/cm^2 sec. The beam is made monochromatic by reflection from the (111) plane of a lead single-crystal. The monochromatic beam is extracted through a special extraction channel in the boron-paraffin shield. The trolley carrying the specimen can be traversed across the beam so that wavelengths between 1.5 Å and "white" radiation can be covered. BF_3 filled counters enriched with B^{10} are used as detectors. The spectrometer incorporates various attachments such as a crystal calibrator, goniometer for large specimens, electromagnet, cryostat, high-

Card 1/2

APPROVED FOR RELEASE: 08/31/2001 CIA-RDP86-00513R001031110001-3"

"APPROVED FOR RELEASE: 08/31/2001 CIA-RDP86-00513R001031110001-3

temperature chamber, high-pressure multiplicator, etc. In the present work the diffractometer was used to determine the magnetic moments of Ni and Cr in binary alloys containing 5.98 and 8.26 at.% Cr. The experiments were carried out at 77°K. The diffusely scattered background due to the specimen under investigation was determined with and without the magnetic field so as to separate out the magnetic component of the diffuse scattering. The preliminary conclusion is that the addition of Cr to the alloys gives rise to a reduction in the magnetic moment of Ni atoms. It is probable that the Cr moments are anti-parallel to the magnetic moments of the Ni atoms. It is stated that work on the Ni-Cr system is being continued. Academician G.V.Kurdyumov is thanked for his assistance. There are 3 figures and 1 table.

ASSOCIATION: Institut metallovedeniya i fiziki metallov TsNIIChM (Institute of Science of Metals and Physics of Metals TsNIIChM)

SUBMITTED: November 28, 1961

APPROVED FOR RELEASE: 08/31/2001 CIA-RDP86-00513R001031110001-3"

"APPROVED FOR RELEASE: 08/31/2001 CIA-RDP86-00513R001031110001-3

S/126/62/014/002/015/018
E073/E192

AUTHORS: Goman'kov, V.I., Litvin, D.F., Loshmanov, A.A., and Lyashchenko, B.G.

TITLE: Ordering in Ni-Cr alloys

PERIODICAL: Fizika metallov i metallovedeniye, v.14, no.2, 1962, 305-307

TEXT: Ni-Cr alloys were investigated in the region of a Ni_2Cr super-lattice formation, using neutron diffraction and polycrystalline (20 to 35 at.% Cr) and single crystal (with nearly stoichiometric composition, 32.9 at.% Cr) specimens. The crystal was in the form of a sphere 8 mm in diameter. All the specimens were subjected to an equal heat treatment so as to obtain maximum ordering: quenching from 1200 °C in water and annealing at 500 °C for 1036 hours. No super-lattice lines were detected in neutron diffraction patterns of polycrystalline specimens. The [110] zone of the single crystal showed reflections which are characteristic for the super-lattice Ni_2Cr. The dimensions of the anti-phase domains were evaluated as being at least 1200 Å. Neutron

Card 1/2

APPROVED FOR RELEASE: 08/31/2001 CIA-RDP86-00513R001031110001-3"

"APPROVED FOR RELEASE: 08/31/2001 CIA-RDP86-00513R001031110001-3

Ordering in Ni-Cr alloys

S/126/62/014/002/015/018
E073/E192

diffraction studies of the temperature dependence of the degree of distant ordering S can show whether there exists a real two-phase state with a degree of distant order in the new phase S = 1 or whether the single phase solid solution is retained with S = 0.8. The absence of any super-lattice reflections in the neutron diffraction photographs is explained by the authors by the low sensitivity of the powder method used in their experiments. There are 2 figures.

ASSOCIATION: Institut metallovedeniya i fiziki metallov TsNIIChM (Institute of the Science of Metals and the Physics of Metals, TsNIIChM)

SUBMITTED: March 3, 1962

Card 2/2

APPROVED FOR RELEASE: 08/31/2001 CIA-RDP86-00513R001031110001-3"

"APPROVED FOR RELEASE: 08/31/2001 CIA-RDP86-00513R001031110001-3

GOMAN'KOV, V.I.; LITVIN, D.F.; LOSHMANOV, A.A.; LYASHCHENKO, B.G.

Ordering in nickel-chromium alloys. Fiz. met. i metalloved. 14 no.2: 305-307 Ag '62. (MIRA 15:12)

1. Institut metallovedeniya i fiziki meallov TSentral'nogo nauchno-issledovatel'skogo instituta chernoy metallurgii.
(Nickel-chromium alloys--Metallography)

APPROVED FOR RELEASE: 08/31/2001 CIA-RDP86-00513R001031110001-3"

"APPROVED FOR RELEASE: 08/31/2001 CIA-RDP86-00513R001031110001-3

GOMAN'KOV, V.I.; LITVIN, D.F.; LOSHMANOV, A.A.; LYASHCHENKO, B.G.

On the antiferromagnetic structure of chromium. Kristallografiia 7 no.5:790-792 S-O '62. (MIRA 15:12)

1. Institut metallofiziki TSentral'nogo nauchno-issledovatel'skogo instituta chernoy metallurgii imeni Bardina.
(Ferromagnetism) (Neutron diffraction crystallography)
(Chromium)

APPROVED FOR RELEASE: 08/31/2001 CIA-RDP86-00513R001031110001-3"

"APPROVED FOR RELEASE: 08/31/2001 CIA-RDP86-00513R001031110001-3

GOMAN'KOV, V.I.; LITVIN, D.F.; LOSHMANOV, A.A.; ~~LYASHCHENKO, B.G.~~; PUZEY, I.M.

Neutron diffraction examination for determining the temperature dependance of the atomic order in the FeCo alloy. Ukr. fiz. zhur. 8 no.2:268-270 F '63. (MIRA 16:2)

1. TSentral'nyy nauchno-issledovatel'skiy institut chernoy metallurgii i Institut metallovedeniya i fiziki metallov, Moskva.
(Neutron diffraction crystallography) (Iron-cobalt alloys)

APPROVED FOR RELEASE: 08/31/2001 CIA-RDP86-00513R001031110001-3"

"APPROVED FOR RELEASE: 08/31/2001 CIA-RDP86-00513R001031110001-3

CHERNOPLEKOV, N.A.; ZEMLYANOV, M.G.; CHICHERIN, A.G.; LYASHCHENKO, B.G.

Phonon spectrum of nickel. Zhur. eksp. i teor. fiz. 44 no.3:858-860 Mr '63. (MIRA 16:3)

(Neutron--Scattering) (Nickel--Spectra)

APPROVED FOR RELEASE: 08/31/2001 CIA-RDP86-00513R001031110001-3"

"APPROVED FOR RELEASE: 08/31/2001 CIA-RDP86-00513R001031110001-3

GOMAN'KOV, V.I.; LITVIN, D.F.; I'SHMANOV, A.A.; LYASHCHENKO, E.G.; PUZEY, I.M.

Neutron diffraction determination of the temperature dependence of the arrangement of atoms in a FeCo alloy. Kristallografiia 7 no.5:788-790 S-O '62. (MIRA 15:12)

1. Institut pretsizionnykh splavov TSentral'nogo nauchno-issledovatel'skogo instituta chernoy metallurgii imeni Bardina.
(Iron-cobalt alloy) (Neutron diffraction crystallography)

APPROVED FOR RELEASE: 08/31/2001 CIA-RDP86-00513R001031110001-3"

"APPROVED FOR RELEASE: 08/31/2001 CIA-RDP86-00513R001031110001-3

L 17604-63 EWT(1)/EWP(q)/EWT(m)/ S/056/63/044/003/013/033
FCC(w)/BDS AFFTC/ASD/IJP(C) PAD JD/HW

62

AUTHOR: Chernoplekov, N. A., Zemlyanov, M. G., Chicherin, A. G., and Lyashchenko, B. G.

TITLE: The phonon spectrum of nickel

PERIODICAL: Zhurnal eksperimental'noy i tekhnicheskoy fiziki, v. 44, no. 3, 1963, 858-860

TEXT: The only existing investigation of the phonon spectrum using a fully incoherent slow neutron scattering as suggested by Placzek and Van Hove (Ref. 1: Phys. Rev., 93, 1207, 1954) was done by three of the authors, Chernoplekov, Zemlyanov, and Chicherin (Ref. 2: ZhETF, 43,2080, 1962). The present paper reports results of inelastic scattering of slow neutrons on a sample of nickel isotope alloy with a zero mean coherent amplitude. Nickel as well as vanadium is a transition metal but has a face-centered cubic structure allowing the comparison of its phonon spectrum with that of the body-centered cubic lattice of vanadium (see Fig. 2). Measurements were carried out using a time of flight neutron spectrometer. The expansion coefficients of the normal mode oscillation frequency

Card 1/3

APPROVED FOR RELEASE: 08/31/2001 CIA-RDP86-00513R001031110001-3"

"APPROVED FOR RELEASE: 08/31/2001 CIA-RDP86-00513R001031110001-3

L 17601-63 S/056/63/044/003/013/053

O

The phonon spectrum of nickel ...

distribution function $g(\omega)$ are listed in Table 1. The displacement of the Ni phonon spectrum maxima towards higher energies indicates the existence of a strong constant interatomic interaction transcending that in V. There are 2 figures and 1 table.

Table 1. Expansion coefficients of the $g(\omega)$ function

α	z_α	$f_{\alpha 0}$	$f_{\alpha 1}$	$f_{\alpha 2}$	$f_{\alpha 3}$	$f_{\alpha 4}$	$f_{\alpha 5}$	$f_{\alpha 6}$	$f_{\alpha 7}$
0	8,0	0,0169							
1	−4,4	−0,0215	0,0410						
2	−2,6	0,0244	−0,0387	0,0397					
3	−0,4	−0,0131	0,0400	−0,0364	0,0417				
4	−0,4	0,0150	−0,0203	0,0413	−0,0367	0,0466			
5	0,6	−0,0064	0,0309	−0,0184	0,0466	−0,0387	0,0525		
6	−0,5	0,0166	−0,0084	0,0364	−0,0167	0,0544	−0,0430	−0,0626	
7	−0,7	−0,0005	0,0410	−0,0031	0,0456	−0,0016	0,0682	0,0472	0,0751

Card 2/3

APPROVED FOR RELEASE: 08/31/2001 CIA-RDP86-00513R001031110001-3"

"APPROVED FOR RELEASE: 08/31/2001 CIA-RDP86-00513R001031110001-3

L 17604-63 S/056/53/044/003/013/053

0

The phonon spectrum of nickel...

Fig. 2

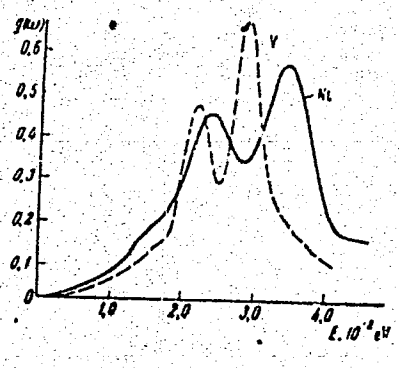

SUBMITTED: October 13, 1962

Card 3/3

APPROVED FOR RELEASE: 08/31/2001 CIA-RDP86-00513R001031110001-3"

"APPROVED FOR RELEASE: 08/31/2001 CIA-RDP86-00513R001031110001-3

LYASHCHENKO, B.G.; SOROKIN, L.M.

Determining the position of carbon in cementite by the neutron diffraction method. Kristallografiia 8 no.3:382-387 My-Je '63. (MIRA 16:11)

1. Institut metallovedeniya i fiziki metallov TSentral'nogo nauchno-issledovatel'skogo instituta cherroy metallurgii imeni I.P.Bardina.

APPROVED FOR RELEASE: 08/31/2001 CIA-RDP86-00513R001031110001-3"

"APPROVED FOR RELEASE: 08/31/2001 CIA-RDP86-00513R001031110001-3

ACCESSION NR: AP4033104 S/0120/64/000/002/0043/0046

AUTHOR: Abesadze, P. D.; Doydzhashvili, G. I.; Litvin, D. F.; Lyashchenko, B. G.; Protopopov, N. N.; Chikobava, V. S.

TITLE: Universal device for neutron-diffraction structure analysis

SOURCE: Pribory* i tekhnika eksperimenta, no. 2, 1964, 43-46

TOPIC TAGS: neutron diffraction, structural analysis, neutron diffraction analysis, diffractometer, neutron collimator, neutron monochromator

ABSTRACT: A new device combining the features of those described by Borst and Sailor (Rev. Scient. Instrum., 1953, 24, 141) and Wollan and Kochler (Phys. Rev., 1955, 100, 545) consists of three mechanically independent components: a neutron collimator 1 (see Enclosure 1), a crystal monochromator 2, and a diffractometer. The collimator is formed by N50 -alloy 0.1-mm sheets with 2-mm gaps. The monochromator includes a Pb 10x80x200-mm plate cut from a

Card 1/3

APPROVED FOR RELEASE: 08/31/2001 CIA-RDP86-00513R001031110001-3"

"APPROVED FOR RELEASE: 08/31/2001 CIA-RDP86-00513R001031110001-3

ACCESSION NR: AP4033104

single crystal and fastened to a goniometer. The diffractometer can be adjusted to any wavelength from 1.5 Å to the "white" radiation. Proportional counters filled with BF_3 at 400 torr with up to 86% B^{10} are used for neutron detection. Three neutron-diffraction curves are shown; design details are supplied. "The assembling and testing of the first laboratory model of the device were carried out by V. I. Goman'kov, N. V. Grin'kin, S. A. Vyazemskiy, D. F. Litvin, A. A. Loshmanov, and B. G. Lyashchenko." Orig. art. has: 4 figures.

ASSOCIATION: Institut metallovedeniya i fiziki metallov TsNIIChM (Institute of Metal Science and Physics of Metals, TsNIIChM); Institut fiziki AN GruzSSR (Institute of Physics, AN GruzSSR)

SUBMITTED: 30May63 ATD PRESS: 3046 ENCL: 01

SUB CODE: NP NO REF SOV: 001 OTHER: 003

Card 2/3

APPROVED FOR RELEASE: 08/31/2001 CIA-RDP86-00513R001031110001-3"

"APPROVED FOR RELEASE: 08/31/2001 CIA-RDP86-00513R001031110001-3

ENCLOSURE: 01

ACCESSION NR: AP4033104

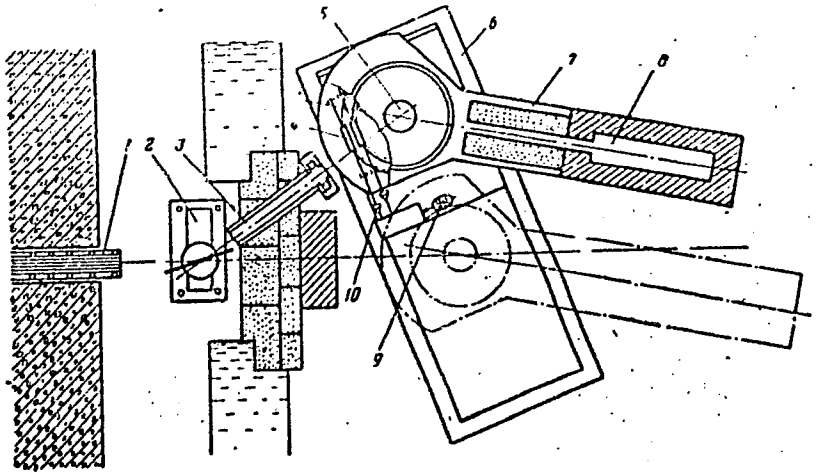

Fig. 1. Universal device for neutron-diffraction studies
1 - Collimator; 2 - crystal monochromator; 3 - channel;
4 - wormgear; 5 - stage; 6 - support plate; 7 - console;
8 - detector; 9 - electric motor; 10- electromagnetic clutch.

Card 3/3

APPROVED FOR RELEASE: 08/31/2001 CIA-RDP86-00513R001031110001-3"

"APPROVED FOR RELEASE: 08/31/2001 CIA-RDP86-00513R001031110001-3

KELAREV, V.V.; KLYUSHIN, V.V.; LYASHCHENKO, B.G.

Dependence of the magnetic structure of $FePt_3$ alloys on the degree of long-range ordering. Fiz. met. i metalloved. 17 no.5:779-782 My '64. (MIRA 17:9)

1. Institut fiziki metallov AN SSSR.

APPROVED FOR RELEASE: 08/31/2001 CIA-RDP86-00513R001031110001-3"

"APPROVED FOR RELEASE: 08/31/2001 CIA-RDP86-00513R001031110001-3

LYASHCHENKO, S.S.

Effect of spontaneous magnetization on the crystal structure and phase constitution of alloys. Probl. metalloved. i fiz. met. no.8: 395-412 '64. (MIRA 18:7)

APPROVED FOR RELEASE: 08/31/2001 CIA-RDP86-00513R001031110001-3"

"APPROVED FOR RELEASE: 08/31/2001 CIA-RDP86-00513R001031110001-3

L 33176-66 EWT(1) IJP(c)

ACC NR: AR6016239 SOURCE CODE: UR/0058/65/000/011/E106/E107

AUTHOR: Lyashchenko, B. G.

TITLE: Concerning the influence of spontaneous magnetization on the crystal structure and the phase state of alloys

SOURCE: Ref. zh. Fizika, Abs. 11E823

REF SOURCE: Sb. tr. In-t metalloved. i fiz. metallov Tsentr. n.-i. in-ta chernoy metallurgii, vyp. 36, 1964, 395-412

TOPIC TAGS: solid solution, ordered alloy, spontaneous magnetization, phase diagram, phase transition, iron alloy, specific heat, temperature dependence, thermal expansion

ABSTRACT: Theoretical considerations are advanced concerning the atomic-ferromagnetic ordering of solid solutions (SS). An analysis is made of more than 30 phase-equilibrium diagrams of metallic alloys containing ferromagnetic and antiferromagnetic elements. It is shown that the 3d-exchange interaction plays an appreciable role in the formation of the different phases. This interaction exerts an influence not only on the position of the solubility limits, but is responsible for the formation of a special class of superstructures and for the stratification of the SS. Even a simple subdivision of ferromagnetic and antiferromagnetic elements into "left" and "right" elements in accord with their position on the Bethe curve, and the crude assumption that such a division remains in force also in alloys, makes it possible in most cases to indicate correctly the singularities of the phase-equilibrium diagrams of the alloys. Exceptions are certain alloys of iron. However, the idea that iron, which is

Card 1/2

APPROVED FOR RELEASE: 08/31/2001 CIA-RDP86-00513R001031110001-3"

"APPROVED FOR RELEASE: 08/31/2001 CIA-RDP86-00513R001031110001-3

L 33176-66

ACC NR: AR6016239

"left-hand" in the elementary state, can become "right-hand" in SS with increasing crystal-lattice parameter (Fe-Al, Fe-Si, Fe-Cr, Fe-V, Fe-Ni) is natural, since the representation of Fe (especially α-Fe) on the Bethe curve is not far from the maximum. There are grounds for assuming that a strong deviation from ideality is observed for the solid solutions Fe-Pt and Fe-Pd. The information relative to the binary alloys which are of appreciable interest, namely Fe-Mn, Ag-Mn, Fe-Cr, Fe-V, and Ni-Cu, of alloys with Mn and Cr base, and also Fe-Co-Mn, Fe-Co-Cr, Ni-Mn-Cr, Fe-Co-Ni, and Ni-Mn-Co triple alloys are either insignificant or contradictory. For a complete solution of the problem of "metal-ferromagnetic compounds" it is necessary to accumulate exact quantitative data on the specific heat, temperature, and concentration dependences of the degree of atomic ordering in the solid solutions, coefficients of thermal expansion, compressibility, etc. A great influence on the thermodynamics and kinetics of atomic-ferromagnetic ordering of SS should be exerted by the application of a magnetic field. Yu. Avraamov. [Translation of abstract]

SUB CODE: 20

Card 2/2 mc

APPROVED FOR RELEASE: 08/31/2001 CIA-RDP86-00513R001031110001-3"

"APPROVED FOR RELEASE: 08/31/2001 CIA-RDP86-00513R001031110001-3

L 31854-65 EWT(m)/EWP(w)/EPF(c)/EPF(n)-2/EWA(d)/T/EWP(t)/EWP(b) Pr-4/Pu-4
MJW/JD/GG

ACCESSION NR: AP5004275 S/0126/65/019/001/0140/0141 31

AUTHOR: Lyashchenko, B. G.; Okenko, A. P. 29

TITLE: A neutron-structure analysis of Kh25T steel 18 18 B

SOURCE: Fizika metallov i metallovedeniye, v. 19, no. 1, 1965, 140-141

TOPIC TAGS: high chromium steel, steel toughness, steel brittleness, 18 cold shortness, ferrite steel, neutron diffraction pattern, steel superstructure, atom scattering, iron chromium system, steel Kh25T

ABSTRACT: This study involved an investigation of high-chromium ferrite Kh25T steel (Cr—24.7; Ti—0.68 and C—0.08%). Series of tests were made of the toughness of the steel at temperatures characterizing the cold shortness threshold and different periods of exposure to 475C. It was found that the so-called "475C brittleness" produced in Kh25T steel is accompanied by a reduced electrical resistance, some increase in the modulus of elasticity, and an increase in the lattice parameter and specific volume. The nature of the "475C brittleness" in this project was studied by the method of neutron diffraction analysis. The neutron scattering amplitudes do not depend on the atomic number of the element, and the scattering capacity of the atoms of two metals appearing next to each

Card 1/2

APPROVED FOR RELEASE: 08/31/2001 CIA-RDP86-00513R001031110001-3"

"APPROVED FOR RELEASE: 08/31/2001 CIA-RDP86-00513R001031110001-3

L 31854-65

ACCESSION NR: AP5004275

2

other in the periodic table may vary a great deal. This makes it possible to record the formation of a superstructure in the iron-chromium system. Thus, the development of brittleness in high-chromium ferrite steel within a 400-500C temperature range is associated with the formation of an Fe_3Cr superstructure. "The authors are grateful to Prof. R. I. Entin for his valuable comments and advice in the course of this project." Orig. art. has: 2 figures.

ASSOCIATION: TsNIIChERMET im. I. P. Bardina

SUBMITTED: 20Apr64 ENCL: 00 SUB CODE: MM

NO REF SOV: 001 OTHER: 005

Card 2/2

APPROVED FOR RELEASE: 08/31/2001 CIA-RDP86-00513R001031110001-3"

"APPROVED FOR RELEASE: 08/31/2001 CIA-RDP86-00513R001031110001-3

L 07115-67 EWT(m)/EWP(t)/ETI IJP(c) JD/HW

ACC NR: AP6029109 SOURCE CODE: UR/0048/66/030/006/0964/0967

40
36
B

AUTHOR: Dgrofeyev, Yu.A.; Lyashchenko, B.G.; Novak, L.I.

ORG: none

TITLE: Neutron diffraction studies of the atomic-ferromagnetic superstructures of FeCo: (Fe,Cr)Co, (Fe,Mn)Co and Fe(Co,Ni) [Report, All-Union Conference on the Physics of Ferro- and Antiferromagnetism held 2-7 July 1965 in Sverdlovsk]

SOURCE: AN SSSR. Izvestiya. Seriya fizicheskaya, v. 30, no. 6, 1966, 964-967

TOPIC TAGS: neutron diffraction, ordered alloy, iron alloy, cobalt alloy, chromium alloy, manganese alloy, nickel alloy

ABSTRACT: The paper gives the results of neutron diffraction technique studies of atomic ordering in a series of magnetic iron-cobalt base alloys containing various amounts of chromium, manganese or nickel. The compositions of the 19 different specimens studied are listed in a table. The alloys were prepared by induction furnace melting of mixtures of high-purity metals. The neutron diffraction patterns (curves) were recorded by means of a UNSA-TsNIIChM apparatus (P.D.Abesadze, G.I. Doydzhashvili, D.F.Litvin, B.G.Lyashchenko, N.N.Protopov, and V.S.Chicobava, Pribory i tekhnika eksperimenta, No. 2, 43, 1964) at a neutron wavelength of 1.12 Å (specimen rotation rate 60 rpm). All the patterns except those from the specimens with 50.9% Fe, 24.9% Co and 24.2% Ni and 50.4% Fe, 25.4% Co and 24.2% Ni (which were

Card 1/2

APPROVED FOR RELEASE: 08/31/2001 CIA-RDP86-00513R001031110001-3"

"APPROVED FOR RELEASE: 08/31/2001 CIA-RDP86-00513R001031110001-3

L 07115-67

ACC NR: AP6029109

4

single phase gamma solid solutions) showed superstructure lines of the CsCl type with strongly developed long range order. Many of the other specimens were two-phase. The values of the long-range order parameter S were determined from the intensity ratio of the neighboring (100) and (110) lines. The estimated values of the parameter S are plotted in a figure versus the percentages of Cr, Mn and Ni in the three families of alloys, as evaluated for three different variants of possible lodging of the atoms of the third component in the lattice sites. The actual values of S do not preclude the possibility of any one of the variants, so that other factors have to be invoked to determine the site distribution. In the discussion of the results it is hypothesized that in addition to the variable superstructures detected in the present investigation there may obtain other systems with a different base and different stoichiometry also characterized by atomic ordering with FeCo type layering. The authors are grateful to V.N.Gneushev, V.A.Matovarov and V.V.Sarksyan for participation in recording the diffraction patterns and to V.B.Dmitriyev for assistance in preparing the specimens. Orig. art. has: 1 table and 2 figures.

SUB CODE: 20,07 SUBM DATE: 00 ORIG. REF: 007 OTH REF: 006

Card 2/2 eafr

APPROVED FOR RELEASE: 08/31/2001 CIA-RDP86-00513R001031110001-3"

"APPROVED FOR RELEASE: 08/31/2001 CIA-RDP86-00513R001031110001-3

ACC NR: AP6029111 SOURCE CODE: UR/0048/66/030/006/0972/0974

AUTHOR: Gnoushov, V.N.; Lyashchenko, B.G.; Novak, L.I.; Sarksyan, V.V.

ORG: none

TITLE: Multiple component superstructures of variable composition in magnetic alloys based on Ni_3Fe and Ni_3Mn [Report, All-Union Conference on the Physics of Ferro- and Antiferromagnetism held 2-7 July 1965 in Sverdlovsk]

SOURCE: AN SSSR. Izvestiya. Seriya fizicheskaya, v. 30, no. 6, 1966, 972-974

TOPIC TAGS: neutron diffraction, ordered alloy, iron nickel alloy, nickel alloy, manganese alloy, chromium alloy, MAGNETIC ALLOY

ABSTRACT: Investigations of single phase solid solutions of 3d metals have shown that formation of superstructures of variable composition is characteristic of cross sections of the phase equilibrium diagrams of such three-component alloys as $Ni_3(Fe,Mn)$, $Ni_3(Fe,Cr)$, $(Ni,Co)_3Fe$ and others, so that there was reason to assume that ordering should obtain in the superstructures based on Ni_3Fe, Ni_3Mn and FeCo. Accordingly, in the present work there were investigated by neutron diffraction analysis alloys having the compositions $Ni_3(Fe,Mn)$, $Ni_3(Fe,Cr)$, $Ni_3(Mn,Cr)$, $(Ni,Co)_3Mn$, and $(Ni,Co)_3Fe_{0.5}Mn_{0.5}$. It is feasible to detect formation of long-range order in experiments on polycrystalline specimens of these alloys. About 21 specimens were prepared by induction furnace melting of technical grade components under slag with intro-

Card 1/2

APPROVED FOR RELEASE: 08/31/2001 CIA-RDP86-00513R001031110001-3"

"APPROVED FOR RELEASE: 08/31/2001 CIA-RDP86-00513R001031110001-3

ACC NR: AP6029111

duction of a reducing agent. The neutron diffraction patterns were recorded by the rotating specimen technique (60 rpm) at a wavelength of 1.15 Å. One of the neutron diffraction curves is reproduced (the curve for the 75 Ni + 12.5 Fe + 12.5 Mn specimen). A figure shows the diagram of an eighth of a unit cell and the atomic coordinates for $Ni_{24}Fe_4Mn_4$ ($A_{24}B_4C_4$) type structure are listed in a table. Some of the results for some of the alloys (for example, the existence of the (111) superstructure line) require verification, presumably by measurements on single crystals. The authors are grateful to V.P.Vasilyev, L.N.Koroshunov, and V.A.Matovarov for assistance in recording the neutron diffraction curves. Orig. art. has: 2 tables and 2 figures.

SUB CODE: 20,07 SUBM DATE: 00 ORIG. REF: 006 OTH REF: 003

Card 2/2

APPROVED FOR RELEASE: 08/31/2001 CIA-RDP86-00513R001031110001-3"

"APPROVED FOR RELEASE: 08/31/2001 CIA-RDP86-00513R001031110001-3

ACC NR: AP6036758 SOURCE CODE: UR/0020/66/171/001/0081/0083

AUTHOR: Gneushev, V. N.; Lyashchenko, B. G.; Matovarov, V. A.; Novak, L. I.; Sarksyan, V. V.

ORG: none

TITLE: Neutron diffraction investigation of radiation-induced ordering in Ni_3Mn and $Ni_3F_{1/2}Mn_{1/2}$ alloys

SOURCE: AN SSSR. Doklady, v. 171, no. 1, 1966, 81-83

TOPIC TAGS: neutron diffraction, neutron irradiation, fast neutron, ordered alloy, nickel alloy, manganese containing alloy

ABSTRACT: The tests were made on polycrystalline samples irradiated in a type SM reactor in an integral fast-neutron flux 3.5×10^{17} neut/cm^2 at a temperature 60 -- 70°. The neutron diffraction pictures were taken 56, 74, and 87 or more days following the irradiation. Both samples exhibited ordering action of the reactor irradiation, with (001) and (011) lines appearing for the nickel-iron-manganese compound, and also smeared (012) and (112) lines for the nickel-manganese alloy. The latter two lines indicate that long-range atomic order is also produced. The degrees of long-range order, determined from the ratios of the intensities of the superstructure lines (001) and (011) to the intensity of the main line (111), differed by almost a factor or two.

Card 1/2 UDC: 539.2.22

APPROVED FOR RELEASE: 08/31/2001 CIA-RDP86-00513R001031110001-3"

"APPROVED FOR RELEASE: 08/31/2001 CIA-RDP86-00513R001031110001-3

ACC NR: AP6036758

This difference is attributed to the anisotropy of the distribution of the radiation defects. It is concluded from the results that ordering of a previously disordered Ni_3Mn alloy is feasible, and that this phenomenon depends on the conditions under which the experiments were made. This explains also discrepancies and the results obtained by others. The authors thank V. I. Klimenkov for valuable advice. This report was presented by Academician G. V. Kurdyumov 28 January 1966. Orig. art. has: 1 figure and 1 table.

SUB CODE: 20/ SUBM DATE: 07Jun65/ ORIG REF: 002/ OTH REF: 005

Card 2/2

APPROVED FOR RELEASE: 08/31/2001 CIA-RDP86-00513R001031110001-3"

"APPROVED FOR RELEASE: 08/31/2001 CIA-RDP86-00513R001031110001-3

KIRICHENKO A.P., inzh.; LYASHCHENKO, E.I., inzh.; PANCHENKO, V.A., inzh.

Incompletely reversible electrohydraulic drive. Mekh. i avtom.proizv. 17 no.10:34-35 O '63. (MIRA 17:1)

APPROVED FOR RELEASE: 08/31/2001 CIA-RDP86-00513R001031110001-3"

"APPROVED FOR RELEASE: 08/31/2001 CIA-RDP86-00513R001031110001-3

LYASHCHENKO, Fedor Anan'yevich; GALITSKIY, Dmitriy Pavlovich; KRAVCHENKO, Valeriy Andreyevich; KIREYEVA, T., red.

[Technology of logging operations in the Maritime Territory ensuring the preservation of young growth] Primorskaia tekhnologiia lesosechnykh rabot, obespechivaiushchaia sokhranenie podrosta i molodniaka. Vladivostok, Dal'nevostochnoe knizhnoe izd-vo, 1964. 15 p. (MIRA 18:5)

APPROVED FOR RELEASE: 08/31/2001 CIA-RDP86-00513R001031110001-3"

"APPROVED FOR RELEASE: 08/31/2001 CIA-RDP86-00513R001031110001-3

DMITRIYEV, Yu.L., inzh.; LYASHCHENKO, G.D., inzh.; MEL'NICHENKO, D.Ye., kand. tekhn.nauk

Introduction of the new USKhA No.4 profile of a siphon spillway. Gidr.stroi. 31 no.4:23-26 Ap '61. (MIRA 14:5)
(Ukraine—Spillways)

APPROVED FOR RELEASE: 08/31/2001 CIA-RDP86-00513R001031110001-3"

"APPROVED FOR RELEASE: 08/31/2001 CIA-RDP86-00513R001031110001-3

LYASHCHENKO, I. F.

Mbr., Azov-Don Biological Station, Rostov-on-Don State Univ. im. V. M. Molotov, -1947-48-.

Medicine, Heredity in Plants.

"Mutation of Winter Wheat,"

SO: Dok. AN, 58, No. 7, 1947;

"The Development of Broom Rape in Various Varieties and Hybrids of the Sunflower,"

SO: Dok. AN, 63, No. 6, 1948.

Mbr., Rostov-on-Don State Univ., -1940-41-.

"Cases of No.Segregation in Sunflower Hybrids,"

SO: Dok. AN, 27, No. 8, 1940;

"Some Results Obtained by Crossing Cultivated and Wild Sunflower,"

SO: Dok. AN, 30, No. 3, 1941.

APPROVED FOR RELEASE: 08/31/2001 CIA-RDP86-00513R001031110001-3"

"APPROVED FOR RELEASE: 08/31/2001 CIA-RDP86-00513R001031110001-3

LYASHCHENKO, I. F.

PA 60T55

USSR/Medicine - Wheat Dec 1947
Medicine - Heredity in Plants

"Mutation of Winter Wheat," I. F. Lyashchenko, Azov-Don Biol Sta, Rostov-on-Don State U imeni V. M. Molotov, 3 pp

"Dok Akad Nauk SSSR, Nova Ser" Vol LVIII, No 7

Describes tests conducted on winter wheat selected by Kirgiz Selection station, attempting to determine original parentage of pure strains which made up hybrid winter wheat. Great importance attached to small as well as large physiological mutations. Submitted by Academician I. I. Shmal'gauzen, 13 Jun 1947.

60T55

APPROVED FOR RELEASE: 08/31/2001 CIA-RDP86-00513R001031110001-3"

"APPROVED FOR RELEASE: 08/31/2001 CIA-RDP86-00513R001031110001-3

LYASHCHENKO, I. F.

Lyashchenko, I. F. "The phenomenon of maternal heredity in the sunflower," [A study of immunity to broom-rape], Uchen. zapiski (Rost. n/D gos. un-t im. Molotova), Vol. XII, 1948, p. 3-26 -- Bibliog: 25 items

SO: U-3566, 15 March 53, (Letopis 'Zhurnal 'nykh Statey, No. 14, 1949).

APPROVED FOR RELEASE: 08/31/2001 CIA-RDP86-00513R001031110001-3"

"APPROVED FOR RELEASE: 08/31/2001 CIA-RDP86-00513R001031110001-3

LYASHCHENKO, T. F.

Wheat

Biological properties of adaptable winter-spring wheats. Sel. i sem 17 no. 7, 1952.

MONTHLY LIST OF RUSSIAN ACCESSIONS, Library of Congress, December 1952. UNCLASSIFIED.

APPROVED FOR RELEASE: 08/31/2001 CIA-RDP86-00513R001031110001-3"

"APPROVED FOR RELEASE: 08/31/2001 CIA-RDP86-00513R001031110001-3

LYASHCHENKO, I. F.

"The Genetics of Some of the Economically Valuable Features and and Characteristics of the Sunflower." Dr Biol Sci, All-Union Inst of Plant Growing, Leningrad, 1953. (RZhBiol, No 6, Nov 54)

Survey of Scientific and Technical Dissertations Defended at USSR Higher Educational Institutions (11)

SO: Sum. No.521, 2 Jun 55

APPROVED FOR RELEASE: 08/31/2001 CIA-RDP86-00513R001031110001-3"

"APPROVED FOR RELEASE: 08/31/2001 CIA-RDP86-00513R001031110001-3

MATUKHIN, G.R.; LYASHCHENKO, I.F.

Professor Aleksandr Fedorovich Flerov. Bot.zhur. 38 no.4:624-626 Jl-Ag '53. (MLRA 6:9)

1. Nauchno-issledovatel'skiy biologicheskiy institut pri Rostovskom Gosudarstvennom universitete im. V.M.Molotova.
(Flerov, Aleksandr Fedorovich, 1872-)

APPROVED FOR RELEASE: 08/31/2001 CIA-RDP86-00513R001031110001-3"

"APPROVED FOR RELEASE: 08/31/2001 CIA-RDP86-00513R001031110001-3

LYASHCHENKO, I.F.

USSR.

Respiration in wheat with a changed hered[illegible] pattern. A. A. Erichevskaya and I. F. Lyashchenko (Rostov-on-Don State Univ.). *Ukrain. Biokhim. Zhur.* 26, 330-42(1954)(in Russian).—Summer, winter-intermediate, and winter wheats with a high resistance to weather changes show different modes and degrees of adapting their sugar utilization and respiration processes to different changes (lowering) in temp. B. S. Levine

APPROVED FOR RELEASE: 08/31/2001 CIA-RDP86-00513R001031110001-3"

"APPROVED FOR RELEASE: 08/31/2001 CIA-RDP86-00513R001031110001-3

LYASHCHENKO, I.F.

LYASHCHENKO, I.F.

Effect of grafting on albino sunflower plants. Dokl. AN SSSR 103 no.4:713-714 Ag'55. (MLRA 8:11)

1. Azovo-Donskaya biologicheskaya stantsiya Rostovskogo gosudarstvennogo universiteta imeni V.M.Molotova. Predstavleno akademikom A.L.Kursanovym

(Sunflowers)

APPROVED FOR RELEASE: 08/31/2001 CIA-RDP86-00513R001031110001-3"

"APPROVED FOR RELEASE: 08/31/2001 CIA-RDP86-00513R001031110001-3

LYASHCHENKO, I. F.

LYASHCHENKO, I.F.; LYASHCHENKO, I.I.

Role of the root system in the formation of chlorophyll [with summary in English]. Fiziol. rast. 4 no.6:529-532 N-D '57. (MIRA 10:12)

1. Nauchno-issledovatel'skiy biologicheskiy institut pri Rostovskom gosudarstvennom universitete, Rostov-na-Donu.
(Roots (Botany)) (Chlorophyll)

APPROVED FOR RELEASE: 08/31/2001 CIA-RDP86-00513R001031110001-3"

"APPROVED FOR RELEASE: 08/31/2001 CIA-RDP86-00513R001031110001-3

LYASHCHENKO, I.F.

Hybrids of dual purpose and winter wheats. Zhur.ob.biol. 17 no.4: 296-301 Jl-Ag '56. (MLRA 10:2)

1. Biologicheskaya stantsiya Rostovskogo universiteta im. V.M. Molotova.
(WHEAT BREEDING)

APPROVED FOR RELEASE: 08/31/2001 CIA-RDP86-00513R001031110001-3"

"APPROVED FOR RELEASE: 08/31/2001 CIA-RDP86-00513R001031110001-3

B-5

USSR/General Biology. Genetics. The Genetics of Plants.

Abs Jour: Ref Zhur-Biol., No 20, 1958, 90424.

Author : Lyashchenko, L.F., Ipekdzhian, V.M., Alekseyeva, R.L.
Inst : Rostov Univ.
Title : A Contribution to the Interspecies Hybridization of Wheat.

Orig Pub: Uch. zap. Rostovsk. n/D. un-ta, 1957, 28, 73-77.

Abstract: The results of the hybridization of various wheat species are described. They were: T. vulgare with T. sphaerococcum, T. spelta with T. compactum, T. sphaerococcum with T. spelta, T. durum with T. dicoccum, T. polonicum, T. persicum and T. spelta. The authors support the findings of many previous works on similar wheat intercrosses, although no survey of the plentiful

Card : 1/2

APPROVED FOR RELEASE: 08/31/2001 CIA-RDP86-00513R001031110001-3"

"APPROVED FOR RELEASE: 08/31/2001 CIA-RDP86-00513R001031110001-3

USSR/General Biology. Genetics. The Genetics of Plants. D-5

Abs Jour: Ref Zhur-Biol., No 20, 1958, 90424.

writings on this subject is given in this work. --
T.K. Lepin.

Card : 2/2

APPROVED FOR RELEASE: 08/31/2001 CIA-RDP86-00513R001031110001-3"

"APPROVED FOR RELEASE: 08/31/2001 CIA-RDP86-00513R001031110001-3

COUNTRY : USSR
CATEGORY : Cultivated Plants. Commercial. Oleiferous. Sugar-Bearing. M
ABS. JOURN. : RZhBiol., No. 2, 1959, No. 1741

AUTHOR : Lyashchenko, I.F.; Lyashchenko, I.I.
INST. : Rostov/Don University
TITLE : Biological Characteristics of Albino Sunflower Plants

ORIG. PUB. : Uch. zap. Rostovsk.-n/D un-ta, 1957, 38, 43-45

ABSTRACT : In albino sunflower, as a rule, the cotyledon leaflets have a green coloration, but all the natural leaves are of yellow coloration. During the initial time, the albino plants grow similarly to the green plants, but afterwards they begin to lag strongly in their growth. Under field conditions, they can form 2-3 pairs of true leaves, devoid of chlorophyl, which afterwards perish. Their life span depends on climatic conditions and usually does not exceed 20-30 days. It is determined by the functioning time of the cotyledonic leaflets, after withering of which, all

CARD: 1/3

APPROVED FOR RELEASE: 08/31/2001 CIA-RDP86-00513R001031110001-3"

"APPROVED FOR RELEASE: 08/31/2001 CIA-RDP86-00513R001031110001-3

COUNTRY :
CATEGORY :

ABS. JOUR. : RZhBiol., No. 1, 1959, No. 1741

ABSTRACT : growth ceases, in the removal of cotyledon leaflets or their deprivation of light, all plants perish within 3-4 days. The albino plants are very sensitive to unfavorable enviromental conditions. In vegetative vessels in which, besides albino plants, there were also green ones, the albino plants began slowly to turn green. The formation of chlorophyl was observed in 2-3 pairs of the natural leaves. Such a phenomenon was observed under field conditions in the years 1955-1956, particularly under great moisture content of the soil, when in alveoli together with albino plants, normal ones were also found. The supposition is expressed that in the formation of chlorophyl a great role is attributed to the root system, and the manifestation of albinism is explained by disruption or an insufficiency in any kind of functions. This hypothesis is confirmed by means of grafts of green and albino plants. As a result of grafts of albino plants on green wildings, turning

CARD: 2/3

APPROVED FOR RELEASE: 08/31/2001 CIA-RDP86-00513R001031110001-3"

"APPROVED FOR RELEASE: 08/31/2001 CIA-RDP86-00513R001031110001-3

LYASHCHENKO, I.F.

Vegetative hybridization of sunflowers(Helianthus annuus). Bot. zhur. 43 no. 5:710-712 My '58. (MIRA 11:7)

1. Nauchno-issledovatel'skiy biologicheskiy institut pri Rostovskom gosudarstvennom universitete.
(Sunflowers)
(Hybridization, Vegetable)

APPROVED FOR RELEASE: 08/31/2001 CIA-RDP86-00513R001031110001-3"

"APPROVED FOR RELEASE: 08/31/2001 CIA-RDP86-00513R001031110001-3

LYASHCHENKO, I.F.

Controlled transformation of the nature of wheat and barley.
Bot. zhur. 43 no.9:1293-1303 S '58. (MIRA 11:10)

1. Nauchno-issledovatel'skiy biologicheskiy institut pri Rostovskom gosudarstvennom universitete.
(Birch) (Inflorescence) (Abnormalities (Plants))

APPROVED FOR RELEASE: 08/31/2001 CIA-RDP86-00513R001031110001-3"

"APPROVED FOR RELEASE: 08/31/2001 CIA-RDP86-00513R001031110001-3

LYASHCHENKO, I. F., Doc Biol Sci (diss) -- "On directed change in the nature of wheat and barley". Minsk, 1959. 27 pp (Inst of Biol of the Acad Sci Beloruss SSR), 150 copies (KL, No 23, 1959, 163)

APPROVED FOR RELEASE: 08/31/2001 CIA-RDP86-00513R001031110001-3"

"APPROVED FOR RELEASE: 08/31/2001 CIA-RDP86-00513R001031110001-3

LYASHCHENKO, I.F.

Effect of injuries on the greening of albino sunflower plants.
Fiziol. rast. 7 no.4:483-486 '60. (MIRA 13:9)

1. Scientific-Research Biological Institute, Roston State University.
(Chlorophyll) (Albinos and albinism)

APPROVED FOR RELEASE: 08/31/2001 CIA-RDP86-00513R001031110001-3"

"APPROVED FOR RELEASE: 08/31/2001 CIA-RDP86-00513R001031110001-3

LYASHCHENKO, I.F.

Effect of gibberellic acid on the growth of albino and green sunflower plants. Izv. AN SSSR. Ser. biol. 26 no.1:30-32 Ja-F '61. (MIRA 14:3)

1. Biological Research Institute, State University Rostov-on-Don.
(GIBBERELLIC ACID) (TOMATOES)
(CHLOROPHYLL)

APPROVED FOR RELEASE: 08/31/2001 CIA-RDP86-00513R001031110001-3"

"APPROVED FOR RELEASE: 08/31/2001 CIA-RDP86-00513R001031110001-3

MATUKHIN, G.R.; LYASHCHENKO, I.F.; ARKHANGEL'SKIY, N.N.

In memory of Aleksandr Feodorovich Flerov. Bot.zhur. 46 no.6: 912-914 Je '61. (MIRA 14:6)

1. Rostovskiy gosudarstvennyy universitet.
(Flerov, Aleksandr Fedorovich, 1872-1960)

APPROVED FOR RELEASE: 08/31/2001 CIA-RDP86-00513R001031110001-3"

"APPROVED FOR RELEASE: 08/31/2001 CIA-RDP86-00513R001031110001-3

LYASHCHENKO, I.F.

Chlorophyll mutations in the sunflower. Biul. MOIP, Otd. biol. 69 no.1:141 Ja-F '64. (MIRA 17:4)

APPROVED FOR RELEASE: 08/31/2001 CIA-RDP86-00513R001031110001-3"

"APPROVED FOR RELEASE: 08/31/2001 CIA-RDP86-00513R001031110001-3

LYASHCHENKO, I. F.

LYASHCHENKO, I.F.; LYASHCHENKO, I.I.

Role of the root system in the formation of chlorophyll [with summary in English]. Fiziol. rast. 4 no.6:529-532 N-D '57. (MIRA 10:12)

1. Nauchno-issledovatel'skiy biologicheskiy institut pri Rostovskom gosudarstvennom universitete, Rostov-na-Donu.
(Roots (Botany)) (Chlorophyll)

APPROVED FOR RELEASE: 08/31/2001 CIA-RDP86-00513R001031110001-3"

"APPROVED FOR RELEASE: 08/31/2001 CIA-RDP86-00513R001031110001-3

LYASHCHENKO, I.I.

LYASHCHENKO, I.I.

Pigments of albino and green sunflower plants [with summary in English]. Biokhimiia 22 no.6:942-946 '57. (MIRA 11:2)

1. Azovo-Donskaya biologicheskaya stantsiya pri Rostovskom-na-Donu gosudarstvennom universitete.
(SUNFLOWERS) (COLOR OF PLANTS)

APPROVED FOR RELEASE: 08/31/2001 CIA-RDP86-00513R001031110001-3"

"APPROVED FOR RELEASE: 08/31/2001 CIA-RDP86-00513R001031110001-3

COUNTRY : USSR
CATEGORY : Cultivated Plants. Commercial. Oleiferous. Sugar-Bearings
ABS. JOUR. : RZhBiol., No. [illegible], 1959, No. 1741

AUTHOR : Lyashchenko, I.F.; Ivashchenko, I.I.
INST. : Rostov/Don University
TITLE : Biological Characteristics of Albino Sunflower Lines

ORIG. PUB. : Uch. zap. Rostovsk.-n/D un-ta, [illegible], 43-45

ABSTRACT : In albino sunflower, as a rule, the cotyledon leaflets have a green coloration, but all the natural leaves are of yellow coloration. During the [illegible] time, the albino plants grow similarly to the green plants, and afterwards they begin to lag strongly in their growth. Under field conditions, they can form 2-3 pairs of true leaves, devoid of chlorophyl, which afterwards perish. Their life span depends on climatic conditions and usually does not exceed 20-30 days. It is determined by the functioning time of the cotyledonic leaflets, after withering of which, all

CARD: 1/3

APPROVED FOR RELEASE: 08/31/2001 CIA-RDP86-00513R001031110001-3"

"APPROVED FOR RELEASE: 08/31/2001 CIA-RDP86-00513R001031110001-3

COUNTRY :
CATEGORY :

ABS. JOUR. : RZBiol., No. 1, 1959, No. 1741

ABSTRACT : growth ceases, in the removal of cotyledon leaflets or their deprivation of light, all plants perish within 5-7 days. The albino plants are very sensitive to unfavorable enviromental conditions. In vegetative vessels in the 2, besides albino plants, there were also green ones, and albino plants began slowly to turn green. The formation of chlorophyl was observed in 2-3 pairs of the natural leaves. Such a phenomenon was observed under field conditions in the years 1955-1956, particularly under great moisture content of the soil, when in alveoli together with albino plants, normal ones were also found. The supposition is expressed that in the formation of chlorophyl a great role is attributed to the root system, and the manifestation of albinism is explained by disruption or an insufficiency in any kind of functions. This hypothesis is confirmed by means of grafts of green and albino plants. As a result of grafts of albino plants on green wildings, turning

CARD: 2/3

APPROVED FOR RELEASE: 08/31/2001 CIA-RDP86-00513R001031110001-3"

"APPROVED FOR RELEASE: 08/31/2001 CIA-RDP86-00513R001031110001-3

LYASHCHENKO, I.I.

Dynamics of pigment composition in albino sunflower plants. Fiziol. rast. 6 no.4:475-477 Jl-Ag '59. (MIRA 12:10)

1.Azov-Don Biological Station, Rostov on Don.
(Sunflowers) (Color of plants)

APPROVED FOR RELEASE: 08/31/2001 CIA-RDP86-00513R001031110001-3"

"APPROVED FOR RELEASE: 08/31/2001 CIA-RDP86-00513R001031110001-3

LYASHCHENKO, I.I.

Catalase activity in albino sunflower plants. Bot. zhur. 47 no.7:1032-1035 Jl '62. (MIRA 15:9)

1. Nauchno-issledovatel'skiy biologicheskiy institut pri Rostovskom-na-Donu gosudarstvennom universitete.
(Catalase) (Sunflowers) (Chlorophyll)

APPROVED FOR RELEASE: 08/31/2001 CIA-RDP86-00513R001031110001-3"

"APPROVED FOR RELEASE: 08/31/2001 CIA-RDP86-00513R001031110001-3

LYASHCHENKO, I.I.

Dehydrases in albino sunflower plants. Dokl. AN SSSR 146 no.3: 720-723 S '62. (MIRA 15:10)

1. Predstavleno akademikom A.L.Kursanovym.
(Sunflowers) (Dehydrase) (Albinos and albinism)

APPROVED FOR RELEASE: 08/31/2001 CIA-RDP86-00513R001031110001-3"

"APPROVED FOR RELEASE: 08/31/2001 CIA-RDP86-00513R001031110001-3

LYASHCHENKO, I.I.

Respiration and photosynthesis of albinic sunflower plants.
Fiziol. rast. 8 no.6:750-751 '61. (MIRA 16:7)

1. The Azov-Don Biology Station, Rostov-on-Don University.
(Photosynthesis) (Sunflowers)

APPROVED FOR RELEASE: 08/31/2001 CIA-RDP86-00513R001031110001-3"

"APPROVED FOR RELEASE: 08/31/2001 CIA-RDP86-00513R001031110001-3

L 04546-67 EWT(d) IJP(c)

ACC NR: AT6010214 SOURCE CODE: UR/3187/65/000/001/0090/0099

AUTHOR: Lyashenko, I. N.

ORG: none

7
B+1

16

TITLE: Solution of a Neumann problem by the method of summary representations

SOURCE: Kiyev. Universitet. Kafedra vychislitel'noy matematiki. Vychislitel'naya matematika, no. 1, 1965, 90-99

TOPIC TAGS: Neumann problem, mathematic method, boundary value problem, differential equation solution

ABSTRACT: The author discusses the summary representation method developed by G. N. Polozhiy (Chislennoye resheniye dvumernykh i trekhmernykh krayevykh zadach matematichiskoy fiziki i funktsii diskretnogo argumenta. Izd-vo Kiyevskogo un-ta, 1962) for the solution of boundary value problems in mathematical physics. It is pointed out that such problems frequently do not lend themselves to direct methods nor can they be solved by iteration methods. The summary representation formulas provide a solution of the corresponding finite-difference boundary value problem within a given domain through known quantities and through a small number of parameters which are determined from an auxiliary system consisting of a limited

Card 1/2

APPROVED FOR RELEASE: 08/31/2001 CIA-RDP86-00513R001031110001-3"

"APPROVED FOR RELEASE: 08/31/2001 CIA-RDP86-00513R001031110001-3

I 04546-67

ACC NR: AT6010214

number of linear algebraic equations. In this way, the system is significantly lowered in order and becomes susceptible to numerical solution. Specifically, in the case of rectangular domains, the solution of many problems can be written in explicit form through the use of these formulas. The key formula derived in the paper gives an accurate solution to a finite-difference Neumann problem, which is at the same time peculiarly simple in form and entails a very small number of computational operations. Orig. art. has: 1 figure, 1 table, and 35 formulas.

SUB CODE: 12/ SUBM DATE: none/ ORIG REF: 002

Card 2/2 gd

APPROVED FOR RELEASE: 08/31/2001 CIA-RDP86-00513R001031110001-3"

"APPROVED FOR RELEASE: 08/31/2001 CIA-RDP86-00513R001031110001-3

LYASHCHENKO, K. P.

Monkey rock. Vokrug sveta 5:58 My '53. (MLRA 6:6)
(Rocks)

APPROVED FOR RELEASE: 08/31/2001 CIA-RDP86-00513R001031110001-3"

"APPROVED FOR RELEASE: 08/31/2001 CIA-RDP86-00513R001031110001-3

LYASHCHENKO, K.P.

AKIMENKO, N.M.; BELEVTSEV, Ya.N.; GOROSHNIKOV, B.I.; DUBINKINA, R.P.; ISHCHENKO, D.I.; KARSHENBAUM, A.P.; KULISHOV, M.P.; LYASHCHENKO, K.P.; MAKSIMOVICH, V.L.; SKURIDIN, S.A.; SIROSHTAN, R.I.; TOKHTUYEV, G.V.; FOMENKO, V.Yu.; SHCHERBAKOVA, K.F.; SEMENOV, M.V., red.izd-va; AVERKIYEVA, T.A., tekhn.red.

[Geological structure and iron ores of the Krivoy Rog Basin] Geologicheskoe stroenie i zheleznye rudy Krivorozhskogo basseina. Moskva, Gos. nauchno-tekhn.izd-vo lit-ry po geologii i okhrane nedr, 1957. 278 p. (MIRA 11:3)
(Krivoi Rog Basin--Geology)

APPROVED FOR RELEASE: 08/31/2001 CIA-RDP86-00513R001031110001-3"

"APPROVED FOR RELEASE: 08/31/2001 CIA-RDP86-00513R001031110001-3

LYASHCHENKO, M., inzhener; FISELEV, I.; YAKOBSON, I.

From large brick blocks. Stroitel' no.3:4-5 Ag '57. (MIRA 10:9)
(Kiev--Building blocks)

APPROVED FOR RELEASE: 08/31/2001 CIA-RDP86-00513R001031110001-3"

"APPROVED FOR RELEASE: 08/31/2001 CIA-RDP86-00513R001031110001-3

LYASHCHENKO, M. M.

Forests and Forestry

The new Zakrevka and its achievements. Les. khoz. 5 no. 7, 1952.

9. Monthly List of Russian Accessions, Library of Congress, September 1952 Unclassified.

APPROVED FOR RELEASE: 08/31/2001 CIA-RDP86-00513R001031110001-3"

"APPROVED FOR RELEASE: 08/31/2001 CIA-RDP86-00513R001031110001-3

MALAYA, L.T., prof.; SHALIMOV, A.A.; DUSHANIN, S.A.; LYASHCHENKO, M.M.

Dynamics of the development of cardiac insufficiency in mitral defects based on venous catheterization, puncture of cardiac cavities, filtration phonocardiography and electromagnetic ballistocardiography. Kardiologiia 5 no.2:16-21 Mr-Ap '65. (MIRA 18:7)

1. Kafedra gospital'noy terapii (zav. - prof. L.T.Malaya) Khar'kovskogo meditsinskogo instituta i kafedra grudnoy khirurgii i anesteziologii (zav. - prof. A.A.Shalimov) Ukrainskogo instituta usovershenstvovaniya vrachey, Khar'kov.

APPROVED FOR RELEASE: 08/31/2001 CIA-RDP86-00513R001031110001-3"