APPROVED FOR RELEASE: 06/23/11: CIA-RDP86-00513R001031400005-6

OSTROVSKIY, Yu.M.; LUKASHIK, N.K.; RAZUMOVICH, A.N.; BALAKLEYEVSKIY, A.I.; DOSTA, G.A.; TREBUKHINA, R.V.; LARIN, R.S.; KARPUT', S.N.; KOMAROVA, B.P.; NEPOCHELOVICH, N.S.; DVORYANINOVICH, L.N.; MOYSEYENOK, A.G.; MANDRIK, K.A.; GALITSKIY, E.A.; MATYSIK, M.S.; PODOBED, V.G.; MAKARINA-KIBAK, L.Ya.

Differentiation of specific and nonspecific metabolic shifts in an acute avitaminosis B_1 caused by oxythiamine. Vop.pit. 24 no.4:41-48 Jl-Ag '65. (MIRA 18:12)

1. Kafedra biokhimii (zav. - dotsent Yu.M.Ostrovskiy) meditsinskogo instituta, Grodno. Submitted July 23, 1964.

APPROVED FOR RELEASE: 06/23/11: CIA-RDP86-00513R001031400005-6

APPROVED FOR RELEASE: 06/23/11: CIA-RDP86-00513R001031400005-6

CHUZHOVA, Z.P.; SHUBINA, L.N.; ZALASHKO, M.V.; MAKAR'INA, N.V.

Physiological and biochemical characteristics of aroma-producing Streptococcus diacetilactis cultures. Mikrobiologiia 33 no.3:522-527 My-Je '64. (MIRA 18:12)

1. Vsesoyuznyy nauchno-issledovatel'skiy institut maslodel'noy i syrodel'noy promyshlennosti. Submitted January 8, 1963.

APPROVED FOR RELEASE: 06/23/11: CIA-RDP86-00513R001031400005-6

APPROVED FOR RELEASE: 06/23/11: CIA-RDP86-00513R001031400005-6

L 8202-66

ACC NR: AT5022299

Critical magnetic fields needed to oppose the depolarizing effect, which in turn allows more accurate determination of the parameter a, were found. Only 8800 gauss were required in the hydrogen bubble chamber to counter the effect of hydrogen depolarization. However, the scatter in the value is quite large. The photographic emulsion yielded much smaller scatter but required an application of a very large magnetic field of 140,000 gauss. The value of a found in the experiment is 0.325 ± .010 (as compared to the theoretical value of 0.333). This value was obtained by analyzing over 66,000 events. A brief discussion is given of the effect of the magnetic field on the motion of the electron. It is shown that the electron direction must be measured with respect to the magnetic field direction after setting certain constraints on the selection of the angular range. Orig. art. has: 3 figures, 1 table, 5 formulas.

SUB CODE: 18/ SUBM DATE: 00/ ORIG REF: 005/ OTH REF: 007

nw

Card 2/2

APPROVED FOR RELEASE: 06/23/11: CIA-RDP86-00513R001031400005-6

APPROVED FOR RELEASE: 06/23/11: CIA-RDP86-00513R001031400005-6

L 8202-66 JXT(C2)
ACC NR: AT5022299

SOURCE CODE: UR/3136/64/000/620/0001/0011

AUTHOR: Gurevich, I. I.; Makar'ina, L. A.; Nikol'skiy, B. A.; Sokolov, B. V.; Surkova, L. V.; Khakimov, S. Kh.; Shestakov, V. D.; Dobretsov, Yu. P.; Akhmanov, V. V.

ORG: [Gurevich, Makar'ina, Nikol'skiy, Sokolov, Surkova, Khakimov, Shestakov] IAE; [Dobretsov] MIFI; [Akhmanov] LYaP OIYaI

TITLE: Asymmetry of the angular distribution of electrons in the decay $\pi^+ \rightarrow \mu^+ \rightarrow e^+$ in a magnetic field of 140,000 gauss

SOURCE: Moscow. Institut atomnoy energii. Doklady, IAE-620, 1964, Asimmetriya uglovogo raspredeleniya elektronov pi plus → mu plus → e plus raspada v magnitnom pole napryazhennost'yu 140 000 gauss, 1-11

TOPIC TAGS: mu meson, pi meson, positron, bubble chamber, radioactive decay

ABSTRACT: The universal V-A coupling theory applied to the determination of the angular distribution of electrons in the reaction $\pi^+ \rightarrow \mu^+ \rightarrow e^+$ is given by

$$\frac{dN}{d\theta} \sim 1 - a \cos \theta_e$$

in terms of the parameter a. In order to obtain a value of a which depends on the polarization state of the meson, an experiment was performed showing the effect countering the depolarization of the dense medium through which the meson is moving.

Card 1/2

APPROVED FOR RELEASE: 06/23/11: CIA-RDP86-00513R001031400005-6

APPROVED FOR RELEASE: 06/23/11: CIA-RDP86-00513R001031400005-6

of the conglomerates and the density of the gaps along the traces of 18 e_-/e_+ pairs. The finding that the changes in probability of a flare-spot formation on AgBr grains are attributable to the geometric effect are very small contradicts Weill's conclusions. The traces of the 18 pairs had energies of $8.5 \cdot 10^{10}$ to $2.2 \cdot 10^{13}$ ev; they were registered in six emulsion piles with a total volume of 10 liters which were irradiated in the stratosphere. The energy of a pair was determined by the electron-cascade energy-spectrum method expounded in Varfolomeyev et al., ZhETF, v.38, 1960, 33. The density of the traces was established from a visual determination of the density of conglomerates or blobs and from a measurement of the density of the gaps along the trace of a pair. An appreciable geometric effect is noted on the magnitude of the density of the conglomerates, but not on that of the gaps. This is attributed to growing flarespots between grains, until the distance has attained a value comparable to the diameter of a sensitized grain, $a = 0.6\mu$; there is no comparable growth in the size of the gaps. Weill's inconsistent results are attributed to a possible misunderstanding of Della Corte's data (cf. N. Cim., v. 10, 1953, 958) relative to the effect of pair recombination on the probability of the flaring of AgBr grains. There are 1 figure and 6 references (3 Soviet and 3 English-language).

ASSOCIATION: Institut atomnoy energii im. I. V. Kurchatova (Institute of Atomic Energy imeni I. V. Kurchatov). Academy of Sciences. Moscow, USSR.

APPROVED FOR RELEASE: 06/23/11: CIA-RDP86-00513R001031400005-6

APPROVED FOR RELEASE: 06/23/11: CIA-RDP86-00513R001031400005-6

S/811/62/000/000/003/003

AUTHORS: Varfolomeyev, A.A., Makar'ina, L.A.

TITLE: The density of conglomerates (blobs) in the traces of electron pairs and the geometric effect.

SOURCE: Yadernaya fotografiya; Trudy Tret'yego Mezhdunarodnogo soveshchaniya po yadernoy fotografii, Moskva, iyul' 1960g. K.S. Bogomolov and N.A. Perfilov, eds. Moscow. Izd-vo AN SSSR, 1962, 415-418.

TEXT: The paper presents a report on experimentation and theoretical conclusions relative to the so-called geometric effect which leads to a change in the parameters of the trace of an electron-positron pair under constant ionization losses. Ionization losses on the initial portions of the track of high-energy ($\geq 10^{12}$ ev) electron-positron pairs are attributed to the mutual screening of the electron and positron fields, when their mutual distance r does not exceed an order of $5 \cdot 10^{-3}\mu$. The theoretically predicted effect has been verified experimentally (Varfolomeyev et al., IIme Colloque Internat'l Photogr. Corpusc., Montréal. Presses Univ. Montréal, 1958; ZhETF, v.36, 1959, 707). As the distance r grows up to an beyond the diameter of the sensitized grain, the density of the grains (or conglomerates) of the trace of the pair in a nuclear emulsion attains a value of 2n times the ionization loss; this geometric effect was first pointed out by R. Weill et al. (N.Cimento, v.6, 1957, 413 and 1430). The present study adduces the results of measurements of the density

Card 1/2

APPROVED FOR RELEASE: 06/23/11: CIA-RDP86-00513R001031400005-6

APPROVED FOR RELEASE: 06/23/11: CIA-RDP86-00513R001031400005-6

VARFOLOMEYEV, A.A.; GERASIMOVA, R.I.; GUREVICH, I.I.; MAKAR'INA, L.A.; ROMANTSEVA, A.S.; CHUYEVA, S.A.

Effect of the density of the medium on bremsstrahlung in electron-photon showers involving energies from 10^{11} to 10^{13} ev. Zhur. eksp. i teor. fiz. 38 no.1:33-45 Jan '60. (MIRA 14:9)
(Bremsstrahlung) (Cosmic rays)

APPROVED FOR RELEASE: 06/23/11: CIA-RDP86-00513R001031400005-6

APPROVED FOR RELEASE: 06/23/11: CIA-RDP86-00513R001031400005-6

21(8) SOV/56-36-3-9/71

AUTHORS: Varfolomeyev, A. A., Gerasimova, R. I., Makar'ina, L. A., Romantseva, A. S., Chuyeva, S. A.

TITLE: Ionization Along the Tracks of Electron-Positron Pairs of High Energy (Ionizatsiya vdol' sleiov elektronno-pozitronnykh par vysokoy energii)

PERIODICAL: Zhurnal eksperimental'noy i teoreticheskoy fiziki, 1959, Vol 36, Nr 3, pp 707-716 (USSR)

ABSTRACT: In the introduction the authors discuss the problem and the results of several already published works dealing with this subject. Table 1 contains for the 5 investigated showers (E-53, O-202, D-84, D-44 and I-109) the data of the emulsion piles in which they were recorded (see previous paper by the same authors, reference 7); table 2 contains a list of the E_γ-values according to Janossy (Yanoshi) (Refs 10, 12) and according to Chudakov (Ref 1). (Today it is possible to obtain more exact E_γ-values from curves by the Monte Carlo method by taking the influence exercised by matter on bremsstrahlung into account. The publication of respective results has been announced). A very detailed chapter of this paper deals with gauging of the emulsions (type R-NIKFI). The following experimental data concern the track densities of five high-energy electron-positron pairs in these emulsions. Measurements were carried out on the first pairs of electron-photon showers. Pair energy was determined from the energy spectrum of the cascade electrons at a distance of 2.5 - 3 radiation lengths from the vertex of the first pair. In three cases pair energy was nearly $.10^{12}$ev and in two cases it was approximately 3.10^{11}ev. Track density was determined by two methods: from the grain density in the track and from the gap length distribution coefficient. Compared with a particle for which the specific energy loss is twice as great as the ionization loss of the electron, the track density of the pair near the vertex was found to be smaller. This decrease of the pair track density can be explained by the mutual screening of the electron and positron during ionization. The results obtained are compared with the theoretical ionization curves for pairs calculated by A. Ye. Chudakov (Ref 1). The authors finally thank Professor I. I. Gurevich for his interest and discussions, A. A. Kondrashina for his help in evaluating measuring results, and D. M. Samoylovich and his group for developing the piles of emulsion plates. There are 8 figures, 2 tables, and 21 references, 3 of which are Soviet.

Card 1/3

Card 2/3

SUBMITTED: August 18, 1958

Card 3/3

APPROVED FOR RELEASE: 06/23/11: CIA-RDP86-00513R001031400005-6

APPROVED FOR RELEASE: 06/23/11: CIA-RDP86-00513R001031400005-6

2

31541
S/627/60/002/000/024/027
D299/D304

Electron-photon showers ...

figures, 3 tables and 21 references: 10 Soviet-bloc and 11 non-Soviet-bloc. The 4 most recent references to the English-language publications read as follows: K. Pinkau. Nuovo Cim., 3, 1285, 1956; H. Fay. Nuovo Cim., 5, 293, 1957; J. Iwadare. Phil. Mag., 3, 680, 1958; S. K. Srnivasan, J. S. Butcher, B. A. Chartres, H. Messel. Nuovo Cim., 9, 77, 1958.

Card 4/4

APPROVED FOR RELEASE: 06/23/11: CIA-RDP86-00513R001031400005-6

APPROVED FOR RELEASE: 06/23/11: CIA-RDP86-00513R001031400005-6

31541
S/627/60/002/000/024/027
D299/D304

Electron-photon showers ...

racy of 20 - 30%) for energies of up to $(5-7)\cdot 10^8$ ev. The total number of pairs formed at depths $\leqslant 1.0\ t_0$ and $\leqslant 1.5\ t_0$ with energies higher than (1-2) Mev, is plotted in two figures, from which it is evident that the experimental points fit better the curve which takes into consideration the influence of the medium on the bremsstrahlung (the curve obtained by Migdal's formula); the curve obtained by Bethe-Heitler's formula does not fit the experimental results. The figures also show that not one of the 15 showers under consideration is anomalous. Apparently, the majority of so-called "anomalous" showers, described in literature, can be explained by statistical fluctuations in the cascades or by improper determination of the energy of primary electron-positron pairs. Another figure exhibits the experimental curves of longitudinal shower development; here, too, no appreciable deviations from the corresponding theoretical curves are observed. A table lists data on the number of pairs formed at small distances $r < 0.5\mu$ from the nearest electron track; these data might be useful in analyzing the cross-section for pair formation by high-energy electrons. There are 4

Card 3/4

APPROVED FOR RELEASE: 06/23/11: CIA-RDP86-00513R001031400005-6

APPROVED FOR RELEASE: 06/23/11: CIA-RDP86-00513R001031400005-6

number of cascade electrons of energy higher than $\mathcal{E}_c$ = 300 Mev, at a depth of 2.5 - 3.0 t_0. A table lists (for comparison) the values of E_γ, obtained by the Monte Carlo method and by formula

$$R = \frac{1}{16,1}\left\{45,0 + \ln\left[\left(\frac{2x}{E}\right)^2 (1 + 140\ x)\right]\right\} \qquad (1)$$

where x is the distance from the pair vertex in cm; this formula is semiempirical and represents the ratio of ionization losses of pairs to those of relativistic electrons; the ionization losses are due to mutual shielding of electron and positron fields. In the experiments, particular care was taken to detect the vertices of the electron-positron pairs, formed at depths $\leqslant 1.5\ t_0$. After determining the lateral shower distribution, the energy of the electrons of the pairs was measured by means of multiple scattering (to an accu-

APPROVED FOR RELEASE: 06/23/11: CIA-RDP86-00513R001031400005-6

APPROVED FOR RELEASE: 06/23/11: CIA-RDP86-00513R001031400005-6

MAKAR'INA, L.A.

31541
S/627/60/002/000/024/027
D299/D304

3.2410 (2805, 2705, 2805)

AUTHORS: Varfolomeyev, A. A., Gerasimova, R. I., Gurevich, I.I., Makar'ina, L.A., Romantseva, A. S., and Chuyeva, S. A.

TITLE: Electron-photon showers with energies of 11^{11} - 10^{13} ev. in nuclear emulsions

SOURCE: International Conference on Cosmic Radiation. Moscow, 1959. Trudy. v. 2. Shirokiye atmosfernyye livni i kaskadnyye protsessy, 299-306

TEXT: A detailed investigation was carried out of 15 electron-photon showers with energies $>10^{11}$ ev., at low depths. In contradistinction to other works, the results are compared with those obtained for cascades by the Monte Carlo method. Six emulsion stacks were used, with total volume of about 10 liters. In 5 of the stacks of emulsion Р-НИКФИ (R-NIKFI), the grain density of relativistic electrons was 30 - 35 grains per 100 μ. The energy E_γ of primary quanta which generate the shower, was determined from the

Card 1/4

APPROVED FOR RELEASE: 06/23/11: CIA-RDP86-00513R001031400005-6

APPROVED FOR RELEASE: 06/23/11: CIA-RDP86-00513R001031400005-6

ACC NR: AP6025609

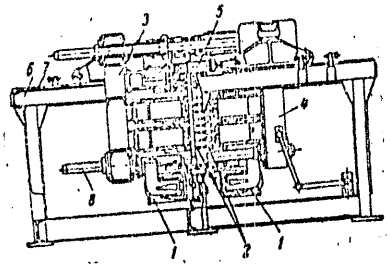

Fig. 1. 1 - welding transformers; 2 - welding guns; 3 and 4 - vertical plates; 5 - driving mechanism for plates; 6 - frame; 7 - guides; 8 - rods

in their original position prior to welding. Orig. art. has: 1 figure.

SUB CODE: 13/ SUBM DATE: 16Jun65

Card 2/2

APPROVED FOR RELEASE: 06/23/11: CIA-RDP86-00513R001031400005-6

APPROVED FOR RELEASE: 06/23/11: CIA-RDP86-00513R001031400005-6

ACC NR: AP6025609 (N) SOURCE CODE: UR/0413/66/000/013/0050/0050

INVENTORS: Volkov, S. N.; Makar'in, V. P.; Palevich, K. K.; Rubaylo, G. A.; Gerasimova, L. S.; Ryazantseva, V. M.; Andreyeva, I. I.; Semenova, A. G.

ORG: none

TITLE: A machine for contact spot welding. Class 21, No. 183300

SOURCE: Izobreteniya, promyshlennyye obraztsy, tovarnyye znaki, no. 13, 1966, 50

TOPIC TAGS: welding, spot welding, welding technology, welding equipment

ABSTRACT: This Author Certificate presents a machine for contact spot welding. The machine contains a frame and welding transformers, each of which is electrically connected to a group of welding guns (see Fig. 1). To increase the productivity, the welding transformers together with the corresponding group of welding guns are mounted on the vertical planes of plates which move under the action of a driving mechanism located on the frame. The movement takes place along the horizontal guides also located on the frame. Rods attached to one of the plates serve as auxiliary guides for another plate. These rods are intended for fixing the plates

Card 1/2 UDC: 621.791.763.1.037

APPROVED FOR RELEASE: 06/23/11: CIA-RDP86-00513R001031400005-6

APPROVED FOR RELEASE: 06/23/11: CIA-RDP86-00513R001031400005-6

ACC NR: AP6013516

and are described in detail. The coil windings are of square 21x21 mm copper tubing with a 12 mm inside diameter passage for the cooling water. The coil confinement is effected by 30 mm thick rings of fiberglass textolite plastic. The insulation is by 1 mm thick getinax plastic rings, radially cut once and conventionally overlapped by a 180° relative rotation. Solenoid #1, with an inside volume of 12 liters, 175 ka current amplitude and a 65 kOe average magnetic field strength sustained 2500 magnetic load applications to failure - by fracture of no. 8 confining ring. The stronger, smaller (8 liters inside volume) solenoid # 2, with a 220 ka current and a 100 kOe average magnetic field strength sustained 5300 load applications to failure, which was by short circuit at edge of coil. Design and development comments are given. Orig. art. has 5 figures and 2 tables.

SUB CODE: 20,09 / SUBM DATE: 10Mar65 / ORIG REF: 000 / OTH REF: 005

Card 2/2

APPROVED FOR RELEASE: 06/23/11: CIA-RDP86-00513R001031400005-6

APPROVED FOR RELEASE: 06/23/11: CIA-RDP86-00513R001031400005-6

ACC NR: AP6013516 UR/0120/66/000/002/0147/0151

AUTHOR: Makar'in, V.K.; Martem'yanov, V.P.

ORG: Institute of Atomic Energy GKAE, Moscow (Institut atomnoy energii GKAE)

TITLE: Installation for the creation of a pulsed magnetic field of [illegible]0 kOe in a volume of 8 liters

SOURCE: Pribory i tekhnika eksperimenta, no. 2, 1966, 147-151

TOPIC TAGS: magnet, magnetic field, solenoid, high magnetic field system, condenser, thyratron, bubble chamber instrumentation/IM-5-150 condenser, TR1-40-15 thyratron

ABSTRACT: This paper describes a high pulsed magnetic field installation designed for use in heavy filler bubble chambers. The installation consists of 1) energy storage, 2) charging control, 3) discharge control, and 4) the impulse magnet (a solenoid). The energy storage uses 1080 IM-5/150 condensers connected in parallel by sections, with safety provisions. The total capacity is .162 farads, which gives 1650 kilojoules of energy at 4.5 kv. The discharge control subsystem operates on the principle of partial automatic opposite sign recharge of the condenser bank by the oscillatory current surge. Thus most of the energy is saved and the condenser bank can be recharged in five seconds (a charge from 3.5 to 4.5 kv. only is needed). The charging is done by a three-phase rectification circuit using six TR1-40/15 thyratrons based upon a TMA-1000/35 anodic transformer (6.3 kv). Two impulse magnets were constructed

Card 1/2 UDC: 539.1.076

APPROVED FOR RELEASE: 06/23/11: CIA-RDP86-00513R001031400005-6

APPROVED FOR RELEASE: 06/23/11: CIA-RDP86-00513R001031400005-6

L 1874-66

ACCESSION NR: AT5022306

ASSOCIATION: none

SUBMITTED: 00 ENCL: 00 SUB CODE: NP

NO REF SOV: 000 OTHER: 005

Card 2/2

APPROVED FOR RELEASE: 06/23/11: CIA-RDP86-00513R001031400005-6

APPROVED FOR RELEASE: 06/23/11: CIA-RDP86-00513R001031400005-6

L 1874-66 EWT(m) DIAAP

ACCESSION NR: AT5022306 UR/3136/65/000/795/0001/0020

AUTHOR: Makar'in, V. K.; Martem'yanov, V. P.

22
B+1

TITLE: A "pulsed magnetic fields" device

SOURCE: Moscow. Institut atomnoy energii. Doklady, IAE-795, 1965. Ustanovka Impul'snyye magnitnyye polya, 1-20

TOPIC TAGS: pulsed magnetic field, bubble chamber, magnet, solenoid

ABSTRACT: The successful use of bubble chambers with "heavy" fillers (such as xenon) requires high magnetic fields in the volume of the chamber. A device producing high pulsed magnetic fields for use with high-energy particle accelerators has been designed and constructed. It consists of a charger, energy accumulator, discharge unit, and pulse magnets. The device has produced pulsed magnetic fields with $\bar{H} = 65$ kOe in a 12-liter volume and $\bar{H} = 100$ kOe in an 8-liter volume. The design and operation of each unit of the device are discussed, and the corresponding photographs and diagrams are provided. "The authors thank I. I. Gurevich and K. N. Mukhin for their steady interest in the work, and S. V. Leonov for assistance in assembling the device." Orig. art. has: 9 figures and 2 tables.

Card 1/2

APPROVED FOR RELEASE: 06/23/11: CIA-RDP86-00513R001031400005-6

APPROVED FOR RELEASE: 06/23/11: CIA-RDP86-00513R001031400005-6

L 58338-65

ACCESSION NR: AP5010446

2

battery discharged to 3.5 kV, the rectifier is able to restore the initial 4.5 kV voltage within approximately 5 seconds. "The authors thank I. I. Gurevich and L. N. Mukhin for continuous interest in the work and S. V. Leonov for help with the assembly of the charging unit." Orig. art. has: 8 figures.

ASSOCIATION: none

SUBMITTED: 00 ENCL: 00 SUB CODE: EE, NP

NR REF SOV: 000 OTHER: 000

Card 2/2

APPROVED FOR RELEASE: 06/23/11: CIA-RDP86-00513R001031400005-6

APPROVED FOR RELEASE: 06/23/11: CIA-RDP86-00513R001031400005-6

L 58338-66 EWT(m)/EPA(w)-2/EWA(m)-2 Pab-10/Pt-7 IJP(c)
ACCESSION NR: AT5010446 UR/3136/64/000/704/0001/0009

33
31
B+1

AUTHOR: Makar'in, V. K.; Martem'yanov, V. P.

TITLE: Charging unit for the supply of the "pulsed magnetic field" apparatus

SOURCE: Moscow. Institut atomnoy energii. Doklady, no. 704, 1964. Zaryadnoye ustroystvo dlya pitaniya ustanovki "Impul'snyye magnitnyye polya," 1-9

TOPIC TAGS: charging unit, accelerator charging, ignitron rectifier

ABSTRACT: A power supply is described for the production of pulsed magnetic fields in bubble, spark, and emulsion chambers used with high-energy particle accelerators. The pulsed magnetic field is produced by discharging a capacitor bank through an inductance coil. The equipment is capable of high energy storage (~ 6950 kJ). Because of the use of ignitrons in the rectifier circuit and because of the inductive properties of the circuit, the battery is never discharged completely. It is recharged between the accelerator discharges, which are produced at intervals from 2 to 10 seconds. The article describes the circuit and the operating principle, the automatic control, and the protective devices. The rectifier was used to charge a capacitor bank of 0.162 F capacitance to 4.5 kV. With the

Card 1/2

APPROVED FOR RELEASE: 06/23/11: CIA-RDP86-00513R001031400005-6

APPROVED FOR RELEASE: 06/23/11: CIA-RDP86-00513R001031400005-6

38152

26.2244

S/058/62/000/004/033/160
A058/A101

AUTHORS: Mukhin, K. N., Makar'in, V. K., Venediktov, A. P.

TITLE: Thermal neutron diffusion in anisotropic media

PERIODICAL: Referativnyy zhurnal, Fizika, no. 4, 1962, 61, abstract 4B457 (V sb. "Neytron. fizika". Moscow, Gosatomizdat, 1961, 198 - 210)

TEXT: The authors describe measurements of thermal neutron diffusion in lead-water plane and rod lattices. A photoneutron Sb + Be source was used. Special measures were taken so that the distribution of neutron sources would be close to plane. The distribution in density of thermal neutrons was measured by the indium detector method. The authors arrived at the following conclusions: 1) for plane lattices, experimental results coincide with theoretical calculations; 2) diffusion anisotropy $L^2_{\parallel}/L^2_{\perp}$ in plane lead-water lattices can attain magnitudes of ~ 2, and in rod lattices, ~ 1.5.

A. Kamayev

[Abstracter's note: Complete translation]

Card 1/1

APPROVED FOR RELEASE: 06/23/11: CIA-RDP86-00513R001031400005-6

APPROVED FOR RELEASE: 06/23/11: CIA-RDP86-00513R001031400005-6

MUKHIN, K.N.; MAKAR'IN, V.K.; VENEDIKTOV, A.P.

[Diffusion of thermal neutrons in anisotropic media]
Diffuziia teplovykh neitronov v anizotropnykh sredakh.
Moskva, Glav. upr. po ispol'zovaniiu atomnoi energii,
1960, 19 p. (MIRA 17:2)

APPROVED FOR RELEASE: 06/23/11: CIA-RDP86-00513R001031400005-6

APPROVED FOR RELEASE: 06/23/11: CIA-RDP86-00513R001031400005-6

Measuring of the Diffusion Length of the Thermal Neutrons in Ice 89-7-13/32

$t^o = -14^oC$ amounted to $L_i = 2.85 \pm 0.05$ cm. The density of the ice was determined hydrostatically and amounted to 0.89 ± 0.01 g/cm^3. The value obtained for the diffusion length L_i of the thermal neutrons in ice can be compared with the previously measured diffusion length of the neutrons in water: $L_w = 2.68 \pm 0.02$ cm. When comparing the value, the various ranges of the absorption $_c$ and the transition $_{tr}$ for water and ice must be taken into account. Next, some details are discussed. The agreement of the experimental value for L_i with that of L_w (by taking account of the dependence of the ranges $_c$ and $_{tr}$ upon the density and the temperature) indicates a slight influence of the modification of the chemical binding upon the diffusion length on the occasion of transition from water to ice. (L 0.1 cm). There is 1 Slavic reference.

SUBMITTED: February 5, 1957

AVAILABLE: Library of Congress

1. Neutrons - Diffusion - Measurement 2. Ice - Applications

Card 2/2

APPROVED FOR RELEASE: 06/23/11: CIA-RDP86-00513R001031400005-6

APPROVED FOR RELEASE: 06/23/11: CIA-RDP86-00513R001031400005-6

MAKARIN, V.K.

AUTHORS: Barkov, L.M., Makar'in, V.K., Mukhin, K.N. 89-7-13/32

TITLE: Measuring of the Diffusion Length of the Thermal Neutrons in Ice (Izmereniye diffuzionnoy dliny teplovykh neytronov vo l'du)

PERIODICAL: Atomnaya Energiya, 1957, Vol. 3, Nr 7, pp. 54-55 (USSR)

ABSTRACT: In an ice prism of 100x100x130 cm^3 the authors carried out measurements of the distribution of the density of the thermal neutrons which occur with slowing down of neutrons of a Sb + Be source. The source was fitted into the center of the prism and an indium foil (by means of which the density of the thermal neutrons was measured) was irradiated at various distances from the source in channels within the prism. (17.4 R 31 cm). For the purpose of eliminating the influence exercised by the cavity, the indium foil was irradiated inside ice rods which were fitted within the channels. The activation due to the resonance neutrons is infinitely small in the intervals R < 17 cm because the density of the resonance neutrons at increasing distance from the source decreases rapidly. The activation by the resonance neutrons at R = 17 cm amounts to only 0.1% of the entire activation of the foil. The method of the measurements was described already in one of the authors previous works. The diffusion length for ice at

Card 1/2

APPROVED FOR RELEASE: 06/23/11: CIA-RDP86-00513R001031400005-6

APPROVED FOR RELEASE: 06/23/11: CIA-RDP86-00513R001031400005-6

MAKARIN, S.N., inzh.

Heat-recovery units of paper machines. Bum.prom. 34 no.2:7-8 F '59. (MIRA 12:4)
(Papermaking machinery) (Heat regenerators)

APPROVED FOR RELEASE: 06/23/11: CIA-RDP86-00513R001031400005-6

APPROVED FOR RELEASE: 06/23/11: CIA-RDP86-00513R001031400005-6

MAKARIN, S.N.; KHANCHIN, V.K.

Pneumatic tube transportation of wood wastes without the use of a cyclone. Der. prom. 8 no.10:24 O '59. (MIRA 12:12)
(Pneumatic tube transportation)

APPROVED FOR RELEASE: 06/23/11: CIA-RDP86-00513R001031400005-6

APPROVED FOR RELEASE: 06/23/11: CIA-RDP86-00513R001031400005-6

SOV/91-59-3-4/22

14(6)

AUTHOR: Makarin, S., Engineer

TITLE: Operation of a Steam Boiler Fired with Shale Rubble (Rabota parovogo kotla na slantsevoy melochi)

PERIODICAL: Energetik, 1959, Nr 3, pp 8-9 (USSR)

ABSTRACT: The author describes the operation of type TS-20 Boiler, produced by the Taganrog Boiler Plant (Taganrogskiy kotel'nyy zavod), which was modified in one of the Estonian Sovnarkhozes for firing with third-grade shale rubble containing 18% combustible parts. It is equipped with the Lomshakov-Krul' type stoker for layer-burning of shale and its continuous transport to the slag chamber. Nominal steam rating of the boiler is 12.6 ton/hour and can be increased up to 25 ton/hour; furnace efficiency is 78%. There is 1 diagram and 1 table.

Card 1/1

APPROVED FOR RELEASE: 06/23/11: CIA-RDP86-00513R001031400005-6

APPROVED FOR RELEASE: 06/23/11: CIA-RDP86-00513R001031400005-6

BARKOV, L.M.; MAKAR'IN, V.K.; MUKHIN, K.N.

Moderation of fission neutrons by uranium-water lattices. (MIRA 9:9)
Atom.energ. no.3:40-44 '56.
(Fission products) (Neutrons) (Nuclear reactors)

APPROVED FOR RELEASE: 06/23/11: CIA-RDP86-00513R001031400005-6

APPROVED FOR RELEASE: 06/23/11: CIA-RDP86-00513R001031400005-6

For the large source with an output of $\sim 10^6$ neutrons it is true that $\tau = (1/6) \int_0^{18} r^4 \varrho(r)dr / \int_0^{18} r^2 \varrho(r)dr = 5,65\ cm^2$, and for the small source with 10^5 neutrons/sec it applies that $5,27 \pm 0,04\ cm^2$. Finally, the expression $\tau = (1/6) \int_0^{\infty} r^4 \varrho(r)dr / r^2 \varrho(r)dr$ was found by extrapolation, which amounts to $5,66 \pm 0,04\ cm^2$ and $5,28 \pm 0,04\ cm^2$ in the case of the large and small source respectively. Because of the other resonances of indium at E=3,9 eV and E=9,1 eV the experimentally determined τ is somewhat too low; the correction is computed to amount to $0,2 \pm 0,1\ cm^2$. Thus, $\tau_{1,46\ eV} = 5,86 \pm 0,15\ cm^2$ (and $5,48 \pm 0,15\ cm^2$) was found for the large (and small) source respectively.

The density distribution $\varrho_T(r)$ of the thermal neutrons was determined by measuring the dependence of the activation of the indium foil on the distance to the source. For the correct determination of M^2 the activity due to resonance neutrons and neutrons with medium energy must be deducted from the total activity of the indium. $M^2 = 14,13 \pm 0,25\ cm^2$ and $13,64 \pm 0,25\ cm^2$ is found for the large and small source respectively. Finally, $L^2 = 7,18 \pm 0,11\ cm^2$ was found for the large source. From these data there follows:

$\Delta\tau_{(1,46-0,025\ eV)} = 1,1 \pm 0,5\ cm^2$ and $1,0 \pm 0,5\ cm^2$ for the large and small source respectively. In conclusion these results are discussed.

INSTITUTION:

APPROVED FOR RELEASE: 06/23/11: CIA-RDP86-00513R001031400005-6

APPROVED FOR RELEASE: 06/23/11: CIA-RDP86-00513R001031400005-6

MAKAR'IN, V.K.

SUBJECT USSR / PHYSICS CARD 1 / 2 PA - 1249

AUTHOR BARKOV, L.M., MAKAR'IN, V.K., MUCHIN, K.N.

TITLE Measuring the Slowing Down of Neutrons in Water in the Energy Interval 1,46 - 0,025 eV.

PERIODICAL Atomaja Energija, 1, fasc. 3, 33-39 (1956)
Publ. 3 / 1956 reviewed 9 / 1956

The present work deals with the experimental determination (by means of an indium detector) of the values of the cross section of the slowing-down length $\tau_{1,46\ eV}$ up to the resonance energy of E_p=1,46 eV, of the migration surface $M^2=\tau_{0,025\ eV}+L^2$, and of the diffusion length L of thermal neutrons, which characterize the slowing down and the diffusion of photoneutrons of the source Sb+Be (E_o=30 keV) in water. Furthermore, the amount of $\Delta\tau_{(1,46\ eV - 0,025\ eV)} = M^2 - L^2 - \tau_{1,46\ eV}$ is determined. The density distribution of thermal and resonance neutrons was measured in an 80x100 cm vessel. When measuring τ of neutrons with a low initial energy (30 keV) it is necessary to determine the distance between source and detector with accuracy. The density $\varrho_{In-Cd}(r)$ of the resonance neutrons was measured with caskets of sheet-cadmium (0,6 mm thickness), and the density of thermal neutrons with caskets of stainless steel. Transition coefficients were determined by comparing the activation of foils of different sizes with a device with reduced background.

APPROVED FOR RELEASE: 06/23/11: CIA-RDP86-00513R001031400005-6

APPROVED FOR RELEASE: 06/23/11: CIA-RDP86-00513R001031400005-6

MAKARIN, S.N., inzh.

Increasing the efficiency of roller dryers. Der.prom. 7 no.11:5-6 N '58. (MIRA 11:11)

1. Latgiproprom.

(Drying apparatus)

APPROVED FOR RELEASE: 06/23/11: CIA-RDP86-00513R001031400005-6

APPROVED FOR RELEASE: 06/23/11: CIA-RDP86-00513R001031400005-6

MAKARIN, S.N., inzhener.

Ventilation of the paper-making machine room. Bum.prom. 28 no.11:28-29 N '53. (MLRA 6:11)

(Paper-making machinery)

APPROVED FOR RELEASE: 06/23/11: CIA-RDP86-00513R001031400005-6

APPROVED FOR RELEASE: 06/23/11: CIA-RDP86-00513R001031400005-6

MAKARIN, S.N., inzhener.

Substitution of steel crucibles for platinum steel. Bum. prom. 28 no.6: 25 Je '53. (MLRA 6:6)
(Crucibles)

APPROVED FOR RELEASE: 06/23/11: CIA-RDP86-00513R001031400005-6

APPROVED FOR RELEASE: 06/23/11: CIA-RDP86-00513R001031400005-6

MAKARIN, S. N., Eng.

Steam Meters

Meter for steam and liquids. Bus. Arch. 2[illegible], No. 4, 1953.

Monthly List of Russian Accessions, Library of Congress
June 1953. UNCL.

APPROVED FOR RELEASE: 06/23/11: CIA-RDP86-00513R001031400005-6

APPROVED FOR RELEASE: 06/23/11: CIA-RDP86-00513R001031400005-6

MAKARIN, S.N., inzhener.

Improving the work of slag supports. Elek.sta. 24 no.7:49-50 Jl '53. (MLRA 6:7)
(Furnaces)

APPROVED FOR RELEASE: 06/23/11: CIA-RDP86-00513R001031400005-6

APPROVED FOR RELEASE: 06/23/11: CIA-RDP86-00513R001031400005-6

MAKARIN, S. N.

Steam Boilers

Competition of firemen in conserving fuel, Sakh. prom., 26, no. 5, 1952.

Monthly List of Russian Accessions, Library of Congress, October 1952. UNCLASSIFIED.

APPROVED FOR RELEASE: 06/23/11: CIA-RDP86-00513R001031400005-6

APPROVED FOR RELEASE: 06/23/11: CIA-RDP86-00513R001031400005-6

4408. STEAM BOILER ATTENDANCE FACILITATED BY OPERATING CHARTS.

Makarin, S. (Za Ekon. Tepliva (Fuel Econ.) Feb. 1951, 32). Operation of most boilers is stated to be insufficiently economical because too little attention is paid to rational attendance routine. The stoker is expected to maintained the requisite steam pressure, but provision for controllin his work is difficult and often non existant. In such cases operating charts, hung up at his working position, can be of assistance to both stoker and management. Examples are given of such charts for coal fired boilers a hand fired and b chain grate.

ASM-SLA METALLURGICAL LITERATURE CLASSIFICATION

APPROVED FOR RELEASE: 06/23/11: CIA-RDP86-00513R001031400005-6

APPROVED FOR RELEASE: 06/23/11: CIA-RDP86-00513R001031400005-6

1ST AND 2ND ORDERS

PROCESSES AND PROPERTIES INDEX

F

4162. COMBUSTION OF HARD COAL IN FURNACE WITH SHAFT TYPE PULVERISER WITH LOUVERED SEPARATOR. Makarin, SN (Za Econ. Topliva (Fuel Econ.), 1949, (12), 10-12). Description of a successful modidification carried out in a boiler installation in which an excess of large particles remained in the pulverized fuel. The vertical shaft leading from pulveriser to furnace was reduced in cross section and an inclined screen with adjustable louvers was inserted in it to divert the large particles back into the pulveriser.

ASM-SLA METALLURGICAL LITERATURE CLASSIFICATION

APPROVED FOR RELEASE: 06/23/11: CIA-RDP86-00513R001031400005-6

APPROVED FOR RELEASE: 06/23/11: CIA-RDP86-00513R001031400005-6

CA

Measurement of the temperature and moisture content of fabrics coming from the drier. S. Makarin. *Legkaya Prom.* **17**, No. 4, 96-102(1938); *Chem. Zentr.* **1939**, I, 288.—The app. constructed for the detn. of the temp. of the fabric in motion or that of the rotating cylinder depends on the measurement of the heat radiated from the hot surface, from which the corresponding temp. of the surface is calcd. by the Stefan-Boltzmann formula. From the temp. of the fabric after drying, as detd. in this manner, the moisture content can be obtained indirectly, since it was shown experimentally that when the temp. and moisture content of the air are const. the temp. of the fabric depends only on its moisture content. M. G. M.

ASM-SLA METALLURGICAL LITERATURE CLASSIFICATION

APPROVED FOR RELEASE: 06/23/11: CIA-RDP86-00513R001031400005-6

APPROVED FOR RELEASE: 06/23/11: CIA-RDP86-00513R001031400005-6

1ST AND 2ND ORDERS

3RD AND 4TH ORDERS

PROCESSES AND PROPERTIES INDEX

OA

19

The determination of moisture in ceramic masses. S. N. Makarin. *Огнеупоры* 6, 1277-84(1938).—A review.
E. E. Stefanowsky

COMMON ELEMENTS

COMMON VARIABLES INDEX

OPEN

MATERIALS INDEX

ASM-SLA METALLURGICAL LITERATURE CLASSIFICATION

MATERIALS INDEX

AUTHOR INDEX

Fe GROUPS

3RD AND 4TH ORDERS

2ND LETTER

1ST AND 3RD LETTER

APPROVED FOR RELEASE: 06/23/11: CIA-RDP86-00513R001031400005-6

APPROVED FOR RELEASE: 06/23/11: CIA-RDP86-00513R001031400005-6

1ST AND 2ND ORDERS

3RD AND 4TH ORDERS

PROCESSES AND PROPERTIES INDEX

CA

17

Determination of the moisture content of ceramic masses. S. Makarin. *Stroitel. Materialy* **1938**, No. 3, 21-3; *Khim. Referat. Zhur.* **2**, No. 2, 69(1939); cf. *C. A.* **33**, 5141[8].—A dielec. method for the detn. of the moisture content, and an app. for its measurement are described. The accuracy is ±1%. This app. can be utilized for the detn. of the moisture in ceramic masses. W. R. Henn

ASM-SLA METALLURGICAL LITERATURE CLASSIFICATION

APPROVED FOR RELEASE: 06/23/11: CIA-RDP86-00513R001031400005-6

APPROVED FOR RELEASE: 06/23/11: CIA-RDP86-00513R001031400005-6

1ST AND 2ND ORDERS

PROCESSES AND PROPERTIES INDEX

3RD AND 4TH ORDERS

17/5

2

ON DETERMINING THE MOISTURE CONTENT IN CERAMIC BODIES. S. N. Makarin (*Ogneupory*, 4, 1277, 1938). A number of rapid and convenient methods of determining moisture content have been developed in the timber and paper industries. These are described. With suitable modifications some of them could be applied to the ceramic industry. The most suitable is the dielectric method, first developed in the U.S.A. paper industry. The moist specimen is made to serve as the dielectric of a condenser, the capacity of which varies with the moisture content of the dielectric. The moisture content is thus determined by measuring the capacity. The apparatus is described with the aid of a sketch. When tested by control tests in a drying cupboard, a straight-line relationship was obtained between moisture content and the scale readings of the condenser. This method is regarded as specially suitable in ceramics, because the effects of possible faulty contacts and of uneven distribution of the moisture throughout the thickness of the specimen are eliminated. Tests should be carried out with the specimen at room temperature. (Ref. Kart. Sil. Lit., No. 5749, 1938.)

ASM-SLA METALLURGICAL LITERATURE CLASSIFICATION

APPROVED FOR RELEASE: 06/23/11: CIA-RDP86-00513R001031400005-6

APPROVED FOR RELEASE: 06/23/11: CIA-RDP86-00513R001031400005-6

30

Ca

Thermal characteristics of a steam vulcanizer. S. Makurin. *J. Rubber Ind.* (U. S. S. R.) 1936, No. 10, 1000-61. A detailed description of thermal conditions of vulcanization of rubber in the vulcanizer. A. P.

ASM-SLA METALLURGICAL LITERATURE CLASSIFICATION

APPROVED FOR RELEASE: 06/23/11: CIA-RDP86-00513R001031400005-6

APPROVED FOR RELEASE: 06/23/11: CIA-RDP86-00513R001031400005-6

1ST AND 2ND ORDERS

PROCESSES AND PROPERTIES INDEX

3RD AND 4TH ORDERS

1

Apparatus for the determination of moisture in ceramic and other materials. S. N. Makarin, Russ. 46,723, April 30, 1936. Construction details of an app. measuring the elec. resistance.

ASM-SLA METALLURGICAL LITERATURE CLASSIFICATION

APPROVED FOR RELEASE: 06/23/11: CIA-RDP86-00513R001031400005-6

APPROVED FOR RELEASE: 06/23/11: CIA-RDP86-00513R001031400005-6

Economies effected by the use of the Grum-Grzhimailo drying chambers. S. Makarin. *Kozhevenno-Obuvnaya Prom. S. S. S. R.* **12**, 477-8(1933).—The Grum-Grzhimailo leather-drying chamber is 6 times as efficient as the Winkel-Mueller unit. A few recommendations for improving the efficiency still more are made and the operations are described. A. A. Boehtlingk

ASM-SLA METALLURGICAL LITERATURE CLASSIFICATION

APPROVED FOR RELEASE: 06/23/11: CIA-RDP86-00513R001031400005-6

APPROVED FOR RELEASE: 06/23/11: CIA-RDP86-00513R001031400005-6

YERMAKOV, I.A.; MAKARIN, P.P., inzh.

New developments in techniques. Tekst.prom. 20 no.5:59-62 My '60. (MIRA 13:8)

1. Zamestitel' glavnogo inzhenera Ramenskogo pryadil'no-tkatskogo kombinata "Krasnoye znamya" (for Yermakov).
(Spinning)

APPROVED FOR RELEASE: 06/23/11: CIA-RDP86-00513R001031400005-6

APPROVED FOR RELEASE: 06/23/11: CIA-RDP86-00513R001031400005-6

BOROKHOV, I.M.; GANSHIN, A.S.; MAKAR'IN, N.M., inzh., red.; PROKOF'YEVA, L.G., red.izd-va; UVAROVA, A.F., tekhn.red.

[Fibrous and combined gland packings] Voloknistye i kombinirovannye sal'nikovye nabivki. Moskva, Gos.nauchno-tekhn.izd-vo mashinostroit.lit-ry, 1959. 181 p. (MIRA 12:12)
(Packing (Mechanical engineering))

APPROVED FOR RELEASE: 06/23/11: CIA-RDP86-00513R001031400005-6

APPROVED FOR RELEASE: 06/23/11: CIA-RDP86-00513R001031400005-6

L 18230-63
ACCESSION NR: AP3005895

of assimilable phosphorus pentoxide in double superphosphate was reduced to 0.9 metric tons. Further testing is required to establish the optimal technologic parameters. Orig. art. has: 10 equations, 3 figures, 1 table.

ASSOCIATION: Moskovskiy inzhenerno-ekonomicheskiy institut im. S. Ordzhonikidze (Moscow Institute of Engineering Economics)

SUBMITTED: 17May62 DATE ACQ: 16Sep63 ENCL: 00

SUB CODE: CH NO REF SOV: 009 OTHER: 000

2/2
Card

APPROVED FOR RELEASE: 06/23/11: CIA-RDP86-00513R001031400005-6

APPROVED FOR RELEASE: 06/23/11: CIA-RDP86-00513R001031400005-6

L 18230-63

45

ACCESSION NR: AP3005895 S/0153/63/006/003/0440/0444

AUTHOR: Makar'in, K. L.

TITLE: A suitable scheme for the regeneration of hydrofluosilicic acid in production of double superphosphate by a new method without acid consumption

SOURCE: IVUZ. Khimiya i khimicheskaya tekhnologiya, v. 6, no. 3, 1963, 440-444

TOPIC TAGS: Hydrofluosilicic acid, double superphosphate, regeneration process, phosphorus pentoxide

ABSTRACT: The cyclic process detailed involves the use of concentrated acid containing ca. 44% hydrofluosilicic acid, which is difficult to obtain. This difficulty can be overcome with the three-stage regeneration process illustrated in Figs. 2 and 3 of the Enclosure, in which there is almost no hydrolysis of silicon fluoride. With this method and the utilization of the heat of the gases emerging from the cyclone chamber for drying the solution and dehydrating the calcium silicofluoride, the consumption of fuel oil for producing 1 metric ton

Card 1/2

APPROVED FOR RELEASE: 06/23/11: CIA-RDP86-00513R001031400005-6

APPROVED FOR RELEASE: 06/23/11: CIA-RDP86-00513R001031400005-6

MAKAR'IN, K.I.

Expedient flow sheet for the regeneration of fluosilicic acid in the production of double superphosphate by a new method without acid consumption. Izv. vys. ucheb. zav.; khim. i khim. tekh. 6 no.3:440-444 '63. (MIRA 16:8)

1. Moskovskiy inzhenerno-ekonomicheskiy institut imeni S. Ordzhonikidze, kafedra khimicheskoy tekhnologii.
(Fluosilicic acids) (Phosphates)

APPROVED FOR RELEASE: 06/23/11: CIA-RDP86-00513R001031400005-6

APPROVED FOR RELEASE: 06/23/11: CIA-RDP86-00513R001031400005-6

MAKAR'IN, K. I. Cand. Tech. Sci.

Dissertation: "Development of a Rational Method for Concentration of Phosphoric Acid." Sci Inst of Fertilizers and Insectofungicides, 28 Feb 47.

SO: Vechernyaya Moskva, Feb, 1947 (Project #17836)

APPROVED FOR RELEASE: 06/23/11: CIA-RDP86-00513R001031400005-6

APPROVED FOR RELEASE: 06/23/11: CIA-RDP86-00513R001031400005-6

ALEKHIN, S.V., doktor tekhn.nauk, prof.; MAKAR'IN, A.M., aspirant

Investing the thin coatings made from polymer materials in relation to their use for railroad rolling stock. Sbor.trud. LIIZHT no.197:116-136 '62. (MIRA 16:8)
(Railroads--Equipment and supplies) (Plastic films)

APPROVED FOR RELEASE: 06/23/11: CIA-RDP86-00513R001031400005-6

APPROVED FOR RELEASE: 06/23/11: CIA-RDP86-00513R001031400005-6

ALEKSEYEV, V.N.; KOZHEVNIKOV, I.N.; LEBEDEVA, K.S.; MAKAR'IN, A.M.; MANENKOVA, A.I.; NIKOLAYEV, A.M.; ROZANOV, A.A.

[Technological instructions for the production of cheese] Tekhnologicheskie instruktsii po proizvodstvu syra. Utverzhdeny VSNKh. 2. izd. Moskva, TSintipishcheprom, 1963. 161 p. (MIRA 18:5)

1. TSentral'nyy nauchno-issledovatel'skiy institut maslodel'noy i syrodel'noy promyshlennosti.

APPROVED FOR RELEASE: 06/23/11: CIA-RDP86-00513R001031400005-6

APPROVED FOR RELEASE: 06/23/11: CIA-RDP86-00513R001031400005-6

MAKAR'IN, A.M.

[Work experience of the "Leningrad" Cheese Factory in Krasnodarsk Territory] Opyt raboty Leningradskogo syrodel'nogo zavoda Krasnodarskogo kraia. Moskva, 1963. 22 p. (MIRA 17:8)

1. Moscow. TSentral'nyy institut nauchno-tekhnicheskoy informatsii pishchevoy promyshlennosti.

APPROVED FOR RELEASE: 06/23/11: CIA-RDP86-00513R001031400005-6

APPROVED FOR RELEASE: 06/23/11: CIA-RDP86-00513R001031400005-6

MAKAR'IN, Aleksandr Mikhaylovich, kand. tekhn. nauk; GISIN, I.B., kand. sel'khoz. nauk, spetsred.; IVANOVA, N.M., red.; PEREDERIY, S.P., tekhn. red.

[Production of soft cheeses] Proizvodstvo miagkikh syrov. Moskva, Pishchepromizdat, 1960. 93 p. (MIRA 15:3)
(Cheese)

APPROVED FOR RELEASE: 06/23/11: CIA-RDP86-00513R001031400005-6

APPROVED FOR RELEASE: 06/23/11: CIA-RDP86-00513R001031400005-6

MAKAR'IN, A.

Movable rack for Swiss cheese. Moloch. prom. 18 no.6:36-37 '57. (MIRA 10:6)

1. Vsesoyuznyy nauchno-issledovatel'skiy institut maslodel'noy i syrodel'noy promyshlennosti.
(Cheese industry--Equipment and supplies)

APPROVED FOR RELEASE: 06/23/11: CIA-RDP86-00513R001031400005-6

APPROVED FOR RELEASE: 06/23/11: CIA-RDP86-00513R001031400005-6

MAKAR'IN, A.

Causes of mold under cheese rind. Moloch. prom. 18 no.4:41 '57.
(Cheese) (MLRA 10:4)

APPROVED FOR RELEASE: 06/23/11: CIA-RDP86-00513R001031400005-6

APPROVED FOR RELEASE: 06/23/11: CIA-RDP86-00513R001031400005-6

MAKAR'IN, A.

Use of oily films on cheese in the ripening stage. Moloch.prom. 18 no.3:12-14 '57. (MLRA 10:4)

1. Vsesoyuznyy nauchno-issledovatel'skiy institut maslodel'noy i syrodel'noy promyshlennosti.
(Cheese)

APPROVED FOR RELEASE: 06/23/11: CIA-RDP86-00513R001031400005-6

APPROVED FOR RELEASE: 06/23/11: CIA-RDP86-00513R001031400005-6

MAKAR'IN, A.

The humidity of air and the distribution of salt in Dutch cheese. Molochnaya Prom. 14, No.7, 34 '53. (MIRA 6:6)
(CA 47 no.22:12680 '53)

APPROVED FOR RELEASE: 06/23/11: CIA-RDP86-00513R001031400005-6

APPROVED FOR RELEASE: 06/23/11: CIA-RDP86-00513R001031400005-6

MAKAT'IN, A.

Butter

Use of buffer salts to increase durability of butter. Mol. prom. 13, no. 9, 1952.

Monthly List of Russian Accessions, Library of Congress, December 1952. Unclassified

APPROVED FOR RELEASE: 06/23/11: CIA-RDP86-00513R001031400005-6

APPROVED FOR RELEASE: 06/23/11: CIA-RDP86-00513R001031400005-6

MAKAR'IN, A.

Cheese - Bacteriology

Rock-like mold and measures against it. Mol. prom. 1 , No. 2, 1952.

Monthly List of Russian Accessions, Library of Congress, May 1952, Unclassified.

APPROVED FOR RELEASE: 06/23/11: CIA-RDP86-00513R001031400005-6

APPROVED FOR RELEASE: 06/23/11: CIA-RDP86-00513R001031400005-6

Butter production from cream. A. Makar'in. *Moloch-naya Prom.* 9, No. 12, 13-16(1948).—The rapid method of butter formation from cream is advocated in contrast to the slow method. Under any conditions the best flavor is obtained upon adjustment of acidity of starting material to 45°T. The short method gives a higher quality product and is more economical. It requires, however, 16-18% by wt. of the fermenting agent in contrast to 5% in the slow method.

G. M. Kosolapoff

ASM-SLA METALLURGICAL LITERATURE CLASSIFICATION

APPROVED FOR RELEASE: 06/23/11: CIA-RDP86-00513R001031400005-6

APPROVED FOR RELEASE: 06/23/11: CIA-RDP86-00513R001031400005-6

1ST AND 2ND ORDERS

3RD AND 4TH ORDERS

PROCESSES AND PROPERTIES INDEX

Oa

12

The production of aroma in butter. A. M. Makar'in *Molochno-Maslodel'naya Prom.* 5, No. 6, 10-13(1938). *Chem. Zentr.* 1939, II, 551. Practical testing of previous theories regarding the formation of aroma in butter in

dicated that the most important part is played by acetyl methylcarbinol and biacetyl, which are not absorbed by the fat globules but are rather contained in the aq. portion of the butter. The upper layers of the sourcing cream are richer in these constituents than the lower. From this it follows that the aroma of the butter is influenced by concn. of aq. constituents of the cream retained in the butter. As a rule this represents 60% of the total moisture content of the butter. W. A. M

COMMON ELEMENTS

COMMON VARIABLES INDEX

OPEN

MATERIALS INDEX

ASM-SLA METALLURGICAL LITERATURE CLASSIFICATION

AUTHOR INDEX

APPROVED FOR RELEASE: 06/23/11: CIA-RDP86-00513R001031400005-6

APPROVED FOR RELEASE: 06/23/11: CIA-RDP86-00513R001031400005-6

1ST AND 2ND ORDERS

PROCESSES AND PROPERTIES INDEX

CN

17

The distribution of biacetyl in the process of production of butter both in the individual products and in the butter in the various phases of production. A. M. Makar'in. *Molochnaya Prom.* 4, No. 5, 20-2(1937); *Chem. Zentr.* 1938, I, 3130.—During accelerated souring of cream the content in biacetyl (and acetylmethylcarbinol) increases sharply; the same is true of the souring of skim milk. Diln. of the mother acid increases the formation of biacetyl. Regardless of the method of souring, the biacetyl content of the butter serum is greater than that of the cream. Washing the butter greatly reduces its biacetyl content. The butter plasma always contains biacetyl. In 1 case out of 8, traces of biacetyl were found in the fat itself. A biacetyl concn. of 0.5% reduces the surface tension of water much less than casein. The aroma of the butter is well pronounced at a biacetyl content of 0.00048% in the plasma. At a biacetyl concn. as low as 0.0013% an odd, sharp odor is noticeable. M. G. Moore

COMMON ELEMENTS

OPEN

MATERIALS INDEX

ASM-SLA METALLURGICAL LITERATURE CLASSIFICATION

APPROVED FOR RELEASE: 06/23/11: CIA-RDP86-00513R001031400005-6

APPROVED FOR RELEASE: 06/23/11: CIA-RDP86-00513R001031400005-6

MAKARIKOV, V.I., inzh.; ADLERSHTEYN, L.S., inzh.

Experience in launching ships. Sudostroenie 25 no.1:72-73 Ja '59. (MIRA 12:3)

(Ships--Launching)

APPROVED FOR RELEASE: 06/23/11: CIA-RDP86-00513R001031400005-6

APPROVED FOR RELEASE: 06/23/11: CIA-RDP86-00513R001031400005-6

MAKARIDZE, V. Ya., Cand of Tech Sci -- (diss) "Investigation of Geometric Elements of Highways in Georgian SSR," Saratov, 1959, 20 pp (Moscow Automobile Highways Institute, Chair of Planning and Projecting Roads) (KL, 1-60, 122)

APPROVED FOR RELEASE: 06/23/11: CIA-RDP86-00513R001031400005-6

APPROVED FOR RELEASE: 06/23/11: CIA-RDP86-00513R001031400005-6

L 18542-66

ACC NR: AP6002176

torques acting during the rotor free run are projected on the axis of outer-gimbal rotation, which causes a precession of the gyroscope with relation to the inner gimbal axis. It is found that a free gyro of the above type has a continuous drift of both the outer and inner axes. Even an ideal (a = O) gyro does not hold its axis in the constant position in space; it has an inner-axis drift. Orig. art. has: 1 figure and 32 formulas.

SUB CODE: 17 / SUBM DATE: 01Jul64 / ORIG REF: 001

Card 2/2 MJS

APPROVED FOR RELEASE: 06/23/11: CIA-RDP86-00513R001031400005-6

APPROVED FOR RELEASE: 06/23/11: CIA-RDP86-00513R001031400005-6

L 18542-66 EWT(d)/FSS-2/EWT(1)/EWT(m)/EEC(k)-2 JD/BC

ACC NR: AP6002176 SOURCE CODE: UR/0146/65/008/006/0084/0090

38

B

AUTHOR: Lebedev, D. V.; Makarikhin, S. I.

ORG: Leningrad Institute of Aviation Instruments (Leningradskiy institut aviatsionnogo priborostroyeniya)

9,44,55

TITLE: Drift of a gyroscope having variable kinetic moment and offset mass center and subjected to constant overloads

SOURCE: IVUZ. Priborostroyeniye, v. 8, no. 6, 1965, 84-90

TOPIC TAGS: gyroscope, gyroscope error

ABSTRACT: Reaction-start gyros having variable kinetic moments of their rotors are analyzed. Systematic drifts of such a free gyroscope subjected to constant overloads are considered; the gyro mass center is offset by $z = -a$ (see figure). Differential equations of the motion of such a gyro are set up, solved, and a formula for the drifts is derived. The drifts are due to the fact that the aerodynamic-resistance and friction

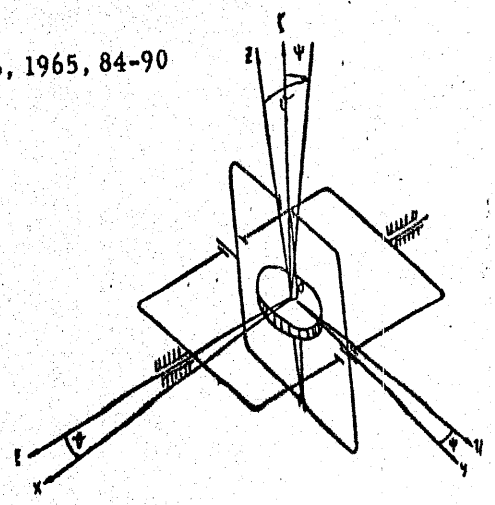

UDC: 531.383

Card 1/2

APPROVED FOR RELEASE: 06/23/11: CIA-RDP86-00513R001031400005-6

APPROVED FOR RELEASE: 06/23/11: CIA-RDP86-00513R001031400005-6

ACCESSION NR: AP4018999

suspension axis. Formulas are found that express the conditions of maximum stability and minimum effect of the amplifier asymmetry. Orig. art. has: 4 figures, 24 formulas, and 1 table.

ASSOCIATION: Leningradskiy institut aviatsionnogo priborostroyeniya (Leningrad Institute of Aviation Instruments)

SUBMITTED: 29Dec62 DATE ACQ: 23Mar64 ENCL: 00

SUB CODE: AE, CG NO REF SOV: 006 OTHER: 000

Card 2/2

APPROVED FOR RELEASE: 06/23/11: CIA-RDP86-00513R001031400005-6

APPROVED FOR RELEASE: 06/23/11: CIA-RDP86-00513R001031400005-6

ACCESSION NR: AP4018999 S/0146/64/007/001/0087/0094

AUTHOR: Makarikhin, S. I.

TITLE: Theory of single-gyro frame

SOURCE: IVUZ. Priborostroyeniye, v. 7, no. 1, 1964, 87-94

TOPIC TAGS: gyro, gyroscope, single gyro, gimbal, gyro frame, single axis gyro

ABSTRACT: The motion of a single-axis single-gyro frame fixed to the Earth is theoretically considered. The system is stabilized by a motor with a nonsymmetrical-characteristic amplifier. The right members of the differential equations that describe the gyro-system motion are represented by disturbing moments due to displacement of the system mass center and to the system correction. It is found that the asymmetry of the amplifier characteristic does affect the stability of the gyro system and its drift around the external gyro-

Card 1/2

APPROVED FOR RELEASE: 06/23/11: CIA-RDP86-00513R001031400005-6

APPROVED FOR RELEASE: 06/23/11: CIA-RDP86-00513R001031400005-6

S/146/61/004/006/0[illegible]3/020
D235/D301

On the character of motion ...

nicheskoy konferentsii po giroskopicheskoy tekhnike (Organizational Committee III of the Intercollegiate Scientific-Technical Conference on Gyroscopic Techniques). There are 3 figures and [illegible] Soviet bloc references.

ASSOCIATION: Leningradskiy institut aviatsionnogo priborostroyeniya (Leningrad Institute of Aviation Instrumentation)

SUBMITTED: February 6, 196[illegible]

Card 2/2

APPROVED FOR RELEASE: 06/23/11: CIA-RDP86-00513R001031400005-6

APPROVED FOR RELEASE: 06/23/11: CIA-RDP86-00513R001031400005-6

S/146/61/004/006/013/020
D235/D301

13.252

AUTHOR: Makarikhin, S. I.

TITLE: On the character of motion of a gyroscope in the presence of a displacement of the center of gravity and friction

PERIODICAL: Izvestiya vysshikh uchebnykh zavedeniy. Priborostroyeniye, v. 4, no. 6, 1961, 96-108

TEXT: The author refers to several previous works by others and states that the problem is solved here with the aid of the "image point" method, for a gyroscope with horizontal external axis. The effect of the displacement of the center of gravity, of the correcting moments and viscous friction is considered. Ye. L. Nikolai (Ref. 1: Doklady AN SSSR, gl. XXXVIII, no. 2-3, 1943), D. N. Klimov (Ref. 3: Doklady AN SSSR, gl. 123, no. 3, 1958) and N. V. Butenin (Ref. 4 and 5: Priborostroyeniye, v. III, no. 4 and 5, 1960) are mentioned for their contributions in this field. This article was recommended by the Orgkomitet III mezhvuzovskoy nauchno-tekh-

Card 1/2

APPROVED FOR RELEASE: 06/23/11: CIA-RDP86-00513R001031400005-6

APPROVED FOR RELEASE: 06/23/11: CIA-RDP86-00513R001031400005-6

28345 S/124/61/000/007/005/044
A052/A101

13.2520

AUTHOR: Makarikhin, S. I.

TITLE: The effect of axial and radial clearances on the precision of work of the vertical flight gyroscope

PERIODICAL: Referativnyy zhurnal, Mekhanika, no. 7, 1961, 21, abstract 7A197 (V sb. "1-ya Mezhvuz. nauchno-tekhn. konferentsiya po probl. sovrem. giroskopii". Leningrad, 1960, 44-61)

TEXT: The problem of the effect of axial and radial clearances in the overhung bearings of the longitudinal-lateral stabilizer on the precision of its work (with an allowance for the correction moments and dry friction moments) is considered. By means of Lagrange methods equations of motion for small precession angles are compiled. It is shown that the origination of moments due to the axial and radial clearance in the bearings of the internal cardan ring as well as the radial clearance in the bearing of the principal axis of the vertical flight gyroscope leads to a shift of the dead zone in relation to that conditioned by the dry friction moments only. An evaluation of the optimum accuracy of the instrument is given. V. Karamyshkin

[Abstracter's note: Complete translation]

Card 1/1

APPROVED FOR RELEASE: 06/23/11: CIA-RDP86-00513R001031400005-6

APPROVED FOR RELEASE: 06/23/11: CIA-RDP86-00513R001031400005-6

S/124/60/000/004/002/027
A005/A001

Translation from: Referativnyy zhurnal, Mekhanika, 1960, No. 4, p. 9, # 4251

AUTHOR: Makarikhin, S.I.

TITLE: On the Precision of the Gyro Vertical With Quasiradial Proportional Correction at Aircraft Cornering

PERIODICAL: Tr. Leningr. in-t aviats. priborostr., 1958, No. 26, pp. 41-55

TEXT: The trajectories of the gyro vertex are plotted in the image plane under airplane cornering conditions, assuming that play exists in the gyroscope suspension bearings.

Ya.N. Roytenberg

Translator's note: This is the full translation of the original Russian abstract.

Card 1/1

APPROVED FOR RELEASE: 06/23/11: CIA-RDP86-00513R001031400005-6

APPROVED FOR RELEASE: 06/23/11: CIA-RDP86-00513R001031400005-6

69362

SOV/123-59-19-79157

Translation from: Referativnyy zhurnal. Mashinostroyeniye, 1959, Nr 19, p 181 (USSR)

1.1000 24.4000

AUTHOR: Makarikhin, S.I.

TITLE: Investigation of the Accuracy of Pitch Detectors With Quasi-Radial Proportional Correction

PERIODICAL: Tr. Leningr. in-t aviats. priborostr., 1958, Nr 19, pp 33 - 49

ABSTRACT: The author analyzes the problem on the effect of axial and radial backlash in the suspension bearings of the longitudinal-transverse gyroscopic stabilizer on its accuracy, taking into consideration the correction moments and the dry friction within the bearings. Clearances shift the center of gravity of the gyroscope assembly relative to the point of support. An analysis of the analytical functions, both for the case of a fixed basis and with allowance for the deviation from the earth rotation, shows that utmost accuracy of the device is obtained if there is no clearance along the inner axle of the gyroscope and no free play moment in relation to this axle. 9 figures, 4 references.

K.G.N.

Card 1/1

APPROVED FOR RELEASE: 06/23/11: CIA-RDP86-00513R001031400005-6

APPROVED FOR RELEASE: 06/23/11: CIA-RDP86-00513R001031400005-6

MAKARIDZE, .V.Ya., assistent.

Selecting an efficient curvature for mountain roads. Avt.dor.20 no.1:25 Ja '57. (MLRA 10:3)

(Curves in engineering)

APPROVED FOR RELEASE: 06/23/11: CIA-RDP86-00513R001031400005-6

APPROVED FOR RELEASE: 06/23/11: CIA-RDP86-00513R001031400005-6

MAKARIDZE, M.M.

"On leucocyte blood charts in exanthematous typhoid", authors: M.A. Yasinovskiy, V.A. Nemsadze, T.N. Tsutsunava, and M.M. Makaridze, Vracheb, delo, 1949, No. 1, paragraphs 45-48.

SO: U-3042, 11 March 53, (Letopis 'nykh Statey, No. 9, 1949)

APPROVED FOR RELEASE: 06/23/11: CIA-RDP86-00513R001031400005-6

APPROVED FOR RELEASE: 06/23/11: CIA-RDP86-00513R001031400005-6

MAKARIDZE , A.M.:

MAKARIDZE, A.M.: "Material on the antitoxic function of the liver in schizophrenia". Tbilisi, 1955. Georgian Publishing House for Medical Literature. Tbilisi State Medical Inst. (Dissertations for the Degree of Candidate of Medical Sciences.)

So. Knizhnaya letopis'. No. 49, 3 December 1955. Moscow.

APPROVED FOR RELEASE: 06/23/11: CIA-RDP86-00513R001031400005-6

APPROVED FOR RELEASE: 06/23/11: CIA-RDP86-00513R001031400005-6

GERSHANOVICH, I.M.; MAKARIDIN, N.A.

Method of measuring the volumetric flow rate in a hole for solving a series of hydrogeologic problems. Geofiz.razved. no.7:102-110 '62. (MIRA 15:7)

(Mine water)

APPROVED FOR RELEASE: 06/23/11: CIA-RDP86-00513R001031400005-6

APPROVED FOR RELEASE: 06/23/11: CIA-RDP86-00513R001031400005-6

MAKARICHEVA, A.D., assistent

Some recommendations for decreasing blood loss in multiple births. Akush.i gin. no.5:63-67 '61. (MIRA 15:1)

1. Iz kafedry akusherstva i ginekologii (zav. - prof. S.L. Keylin) Novosibirskogo meditsinskogo instituta.
(LABOR (OBSTETRICS)) (HEMORRAGE, UTERINE)

APPROVED FOR RELEASE: 06/23/11: CIA-RDP86-00513R001031400005-6

APPROVED FOR RELEASE: 06/23/11: CIA-RDP86-00513R001031400005-6

MAKARICHEV, V.V.

Preface. Trudy NIIZHB no.33:3 '64. (MIRA 18:1)

1. Direktor Nauchno-issledovatel'skogo instituta betona i zhelezobetona, Gosstroya SSSR.

APPROVED FOR RELEASE: 06/23/11: CIA-RDP86-00513R001031400005-6

APPROVED FOR RELEASE: 06/23/11: CIA-RDP86-00513R001031400005-6

NIKOL'SKIY, V.N., kand. tekhn. nauk; SPIVAK, N.Ya., kand. tekhn. nauk; BAULIN, D.K., inzh.; BUADZE, V.Sh., inzh.; KREYTAN, V.G., kand. tekhn. nauk; PERMYAKOV, S.I., kand. tekhn. nauk; USOV, A.L., inzh.; KOSHKIN, V.G., kand. tekhn. nauk; MARAVIN, B.L., inzh.; ERENBURG, A.I., inzh.; KOCHESHKOV, V.G., inzh.; RUBANENKO, B.R., glav. red.; ROZANOV, N.P., zam. glav. red.; ONUFRIYEV, I.A., red.; YUDIN, Ye.Ya., red.; NASONOV, V.N., red.; ISIDOROV, V.V., red.; MAKARICHEV, V.V., red.; FINKINSHTEYN, B.A., inzh. red.;

[Prefabricated floor and ceiling structures] Poly i perekrytiia industrial'noi konstruktsii. Moskva, Gosstroiizdat, 1963. 71 p. (MIRA 16:12).
1. Akademiya stroitel'stva i arkhitektury SSSR. TSentral'nyy nauchno-issledovatel'skiy i eksperimental'no-proyektnyy institut industrial'nykh zhilykh i massovykh kul'turno-bogatykh zdaniy. 2. Nauchno-issledovatel'skiy institut stroitel'noy fiziki i ograzhdayushchikh konstruktsii (for Nikol'skiy, Usov). 3. TSentral'nyy nauchno-issledovatel'skiy i eksperimental'no-proyektnyy institut industrial'nykh zhilykh i massovykh kul'turno-bogatykh zdaniy (for Buadze, Baulin, Spivak, Kreytan, Kocheshkov). 4. Vsesoyuznyy nauchno-issledovatel'skiy institut novykh stroitel'nykh materialov Akademii stroitel'stva i arkhitektury SSSR (for Erenburg).
(Floors) (Ceilings)

APPROVED FOR RELEASE: 06/23/11: CIA-RDP86-00513R001031400005-6

APPROVED FOR RELEASE: 06/23/11: CIA-RDP86-00513R001031400005-6

VAYNBERG, G.D., inzh.; KRICHEVSKAYA, Ye.I., kand. tekhn. nauk; MAZALOV, A.N., inzh.; ROZENFEL'D, A.G., inzh.; FOLOMIN, A.I., doktor tekhn. nauk; TESLER, P.A., kand. tekhn. nauk; SHOLOKHOV, V.G., arkhit.; RUBANENKO, B.R., glav. red.; ROZANOV, N.P., zam. glav. red.; ONUFRIYEV, I.A., red.; YUDIN, Ye.Ya., red.; NASONOV, V.N., red.; ISIDOROV, V.V., red.; MAKARICHEV, V.V., red.; POLUBNEVA, V.I., inzh., red.

[Improving the durability of industrial built-up roofs] Voprosy povysheniia dolgovechnosti industrial'nykh sovmeshchennykh krysh. Moskva, Gosstroiizdat, 1962. 43 p. (MIRA 17:4)

1. Akademiya stroitel'stva i arkhitektury SSSR. Nauchno-issledovatel'skiy institut organizatsii, mekhanizatsii i tekhnicheskoy pomoshchi stroitel'stvu. 2. TSentral'nyy nauchno-issledovatel'skiy i proyektno-eksperimental'nyy institut industrial'nykh, zhilykh i massovykh kul'turno-bytovykh zdaniy Akademii stroitel'stva i arkhitektury SSSR (for Vaynberg, Krichevskaya, Mazalov, Rozenfel'd, Folomin). 3. Nauchno-issledovatel'skiy institut stroitel'noy fiziki Akademii stroitel'stva i arkhitektury SSSR (for Sholokhov). 4. Nauchno-issledovatel'skiy institut betona i zhelezobetona Akademii stroitel'stva i arkhitektury SSSR, Perovo (for Tesler).

APPROVED FOR RELEASE: 06/23/11: CIA-RDP86-00513R001031400005-6

APPROVED FOR RELEASE: 06/23/11: CIA-RDP86-00513R001031400005-6

MAKARICHEV, V.V., kand. tekhn. nauk, red.; ALEKSANDROVSKIY, S.V., kand. tekhn. nauk, nauchn. red.

[Methods of laboratory research in the deformation and strength of concrete, reinforcements, and reinforced concrete structures; proceedings of a coordinating conference] Metodika laboratornykh issledovanii deformatsii i prochnosti betona, armatury i zhelezobetonnykh konstruktsii; trudy. Pod red. V.V.Makaricheva. Moskva, Gosstroiizdat, 1962. 333 p. (MIRA 17:5)

1. Koordinatsionnoye soveshchaniye po metodike laboratornykh issledovaniy deformatsii i prochnosti betona, armatury i elementov zhelezobetonnykh konstruktsiy. 1961.

APPROVED FOR RELEASE: 06/23/11: CIA-RDP86-00513R001031400005-6

APPROVED FOR RELEASE: 06/23/11: CIA-RDP86-00513R001031400005-6

MAKARICHEV, V.V., kand. tekhn. nauk, red.; ALEKSANDROVSKIY, S.V., kand. tekhn. nauk, nauchnyy red.; KUZNETSOVA, M.N., red. izd-va; GOL'BERG, T.M., tekhn. red.

[Proceedings of the Coordinating Conference on Methods of Laboratory Studies of Deformations and Strength of Concrete, Reinforcement and Reinforced Concrete Elements]Trudy koordinatsionnogo soveshchaniia po metodike laboratornykh issledovanii deformatsii i prochnosti betona, armatury i elementov zhelezobetonnykh konstruktsii, 1961. Pod red. V.V.Makaricheva. Moskva, Gosstroiizdat, 1962. 333 p. (MIRA 16:2)

1. Koordinatsionnoye soveshchaniye po metodike laboratornykh issledovaniy deformatsiy i prochnosti betona, armatury i zhelezobetonnykh konstruktsiy, 1961.

(Building materials--Testing)

APPROVED FOR RELEASE: 06/23/11: CIA-RDP86-00513R001031400005-6

APPROVED FOR RELEASE: 06/23/11: CIA-RDP86-00513R001031400005-6

FRENKEL',I.M.---(continued) Card 2.

1. Akademiya stroitel'stva i arkhitektury SSSR. Institut betona i zhelezobetona, Perovo. 2. Chlen-korrespondent Akademii stroitel'stva i arkhitektury SSSR (for Kartashov). 3. Chlen-korrespondent Akademii stroitel'stva i arkhitektury SSSR (for Mironov). 4. Gosudarstvennyy institut tipovogo proyektirovaniya i tekhnicheskikh issledovaniy (for Berdichevskiy, Vasil'yev, Lyudkovskiy, Svetov, Chinenkov, Belobrovyy, Klevtsov, Dobromyslov). 4. Vsesoyuznyy gosudarstvennyy proyektno-konstruktorskiy institut (for Desov, Litver, Pishchik).

(Precast concrete)

APPROVED FOR RELEASE: 06/23/11: CIA-RDP86-00513R001031400005-6

APPROVED FOR RELEASE: 06/23/11: CIA-RDP86-00513R001031400005-6

MAKARICHEV, V.V.

FRENKEL', I.M., kand. tekhn. nauk; MIRONOV, S.A., doktor tekhn. nauk, prof.; BARANOV, A.T., kand. tekhn. nauk; BUZHEVICH, G.A., kand. tekhn. nauk; MIKHAYLOV, K.V., kand. tekhn. nauk; MULIN, N.M., kand. tekhn. nauk; KHAYDUKOV, G.K., kand. tekhn. nauk; KORNEV, N.A., kand. tekhn.nauk; TESLER, P.A., kand. tekhn. nauk; BERDICHEVSKIY, G.I., kand. tekhn. nauk; VASIL'YEV, A.P., kand. tekhn. nauk; LYUDKOVSKIY, I.G., kand. tekhn. nauk; SVETOV, A.A., kand. tekhn. nauk; CHINENKOV, Yu.V., kand. tekhn. nauk; BELOBROVYY, T.K., inzh.; KLEVTSOV, V.A., inzh.; DOBROMYSLOV, N.S., arkh.; DESOV, A.Ye., doktor tekhn. nauk, prof.; LITVER, S.L., kand. tekhn. nauk; PISHCHIK, M.A., inzh.; SKLYAR, B L., inzh.; POPOV, A.P., kand. tekhn. nauk; NEKRASOV, K.D., doktor tekhn. nauk, prof.; MILOVANOV, A.F., kand. tekhn. nauk; TAL', K.E., kand. tekhn. nauk; KALATUROV, B.A., kand. tekhn. nauk; KARTASHOV, K.N., red.; MAKARICHEV, V.V., kand. tekhn. nauk, red.; YAKUSHEV, A.A., inzh., nauchnyy red.; BEGA, B.A., red. izd-va; NAUMOVA, G.D., tekhn. red.

[Reinforced concrete products; present state and prospects for development]Zhelezobetonnye konstruktsii; sostoianie i perspektivy razvitiia. Pod obshchei red. K.N.Kartashova i V.V.Makaricheva. Moskva, Gosstroiizdat, 1962. 279 p. (MIRA 15:8)

(Continued on next card)

APPROVED FOR RELEASE: 06/23/11: CIA-RDP86-00513R001031400005-6

APPROVED FOR RELEASE: 06/23/11: CIA-RDP86-00513R001031400005-6

MOROZOV, N.V., kand. tekhn. nauk; MKRTUMYAN, A.K., kand. tekhn. nauk; ANTIPOV, T.P., arkh.; KOCHESHKOV, V.G., inzh.; LISAGOR, I.A., inzh.; TSAPLEV, N.N., inzh.; IVASHKOVA, V.K., kand. tekhn. nauk; SHIKUNOV, I.Ya., inzh.; FILIN, Yu.D., inzh.; MOSTAKOV, V.I.; BURLACHENKO, P.Ye., kand. khim. nauk[deceased]; PANKRATOV, V.F., inzh.; RUBANENKO, B.R., glav. red.; ROZANOV, N.P., zam. glav. red.; ONUFRIYEV, I.A., red.; YUDIN, Ye.Ya., red.; NASONOV, V.N., red.; ISIDOROV, V.V., red.; MAKARICHEV, V.V., red.; POLUBNEVA, V.I., red.

[Ways of improving design details for the seams of exterior wall slabs] Puti uluchsheniia konstruktivnykh reshenii stykov panelei naruzhnykh sten. Moskva, TSentr. biuro tekhn. informatsii i nauchno-issl. in-ta organizatsii, mekhanizatsii i tekhn. pomoshchi stroit., 1962. 78 p. (MIRA 16:8)

1. TSentral'nyy nauchno-issledovatel'skiy i proyektno-eksperimental'nyy institut industrial'nykh zhilykh i massovykh kul'turno-bytovykh zdaniy (for TSaplev). 2. Nauchno-issledovatel'skiy institut betona i zhelezobetona Akademii stroitel'stva i arkhitektury SSSR, Perovo (for Mostakov). 3. Vsesoyuznyy nauchno-issledovatel'skiy institut novykh stroitel'nykh materialov Akademii stroitel'stva i arkhitektury SSSR (for Pankratov).

(Walls)

APPROVED FOR RELEASE: 06/23/11: CIA-RDP86-00513R001031400005-6

APPROVED FOR RELEASE: 06/23/11: CIA-RDP86-00513R001031400005-6

MAKARICHEV, V.V.; TRIFONOV, V.G.

Panels made of foamed ash concrete for walls of industrial buildings. Prom. stroi. 39 no.5:19-22 '61. (MIRA 14:7)
(Donets Basin--Precast concrete construction)
(Lightweight concrete)

APPROVED FOR RELEASE: 06/23/11: CIA-RDP86-00513R001031400005-6

APPROVED FOR RELEASE: 06/23/11: CIA-RDP86-00513R001031400005-6

MAKARICHEV, V.V., kand. tekhn. nauk; LEVIN, N.I., kand. tekhn.nauk; KUDRYASHEV, I.T., kand. tekhn. nauk, retsenzent [deceased]; RABINOVICH, A.I., kand. tekhn. nauk, retsenzent; GUSAKOV, V.N., kand. tekhn. nauk, retsenzent; GLOTOVA, L.V., red. izd-va; SHERSTNEVA, N.V., tekhn. red.

[Designing elements madeofcellular concrete] Raschet konstruktsii iz iacheistykh betonov. Moskva, Gos. izd-vo lit-ry po stroit., arkhit. i stroit. materialam, 1961. 153 p. (MIRA 14:9)
(Precast concrete)

APPROVED FOR RELEASE: 06/23/11: CIA-RDP86-00513R001031400005-6

APPROVED FOR RELEASE: 06/23/11: CIA-RDP86-00513R001031400005-6

MAKARICHEV, V.V., kand.tekhn.nauk; KOSTOCHKINA, T.V., nauchnyy sotrudnik; IFTINKA, G.A., red.izd-va; SHERSTNEVA, N.V., tekhn.red.

[Instructions for finishing the exterior surfaces of porous concrete articles with cement paints] Ukazaniia po otdelke naruzhnykh poverkhnostei izdelii iz iacheistykh betonov tsementnymi kraskami. Moskva, Gos.izd-vo lit-ry po stroit., arkhit. i stroit.materialam, 1960. 24 p. (MIRA 14:4)

1. Akademiya stroitel'stva i arkhitektury SSSR. Institut betona i zhelezobetona, Perovo.
(Concrete coating)

APPROVED FOR RELEASE: 06/23/11: CIA-RDP86-00513R001031400005-6

APPROVED FOR RELEASE: 06/23/11: CIA-RDP86-00513R001031400005-6

MAKARICHEV, V.V., kand.tekhn.nauk

Modern construction elements made of porous concrete. Trudy NIIZHB no.8:11-19 '59. (MIRA 13:4)

1. Nauchno-issledovatel'skiy institut betona i zhelezobetona Akademii stroitel'stva i arkhitektury SSSR.
(Precast concrete construction)
(Lightweight concrete)

APPROVED FOR RELEASE: 06/23/11: CIA-RDP86-00513R001031400005-6

APPROVED FOR RELEASE: 06/23/11: CIA-RDP86-00513R001031400005-6

MAKARICHEV, V.V., kand.tekhn.nauk

Using porous concrete members in housing and industrial construction.
Bet. i zhel.-bet. no.2:52-58 F '59. (MIRA 12:3)
(Lightweight concrete)

APPROVED FOR RELEASE: 06/23/11: CIA-RDP86-00513R001031400005-6

APPROVED FOR RELEASE: 06/23/11: CIA-RDP86-00513R001031400005-6

MURASHEV, V.A.---(continued) Card 2.

MIKHAYLOV, V.G., kand.tekhn.nauk; SIGALOV, E.Ye., kand.tekhn.nauk; GVOZDEV, A.A., prof., retsenzent; MIKHAYLOV, V.V., prof., retsenzent; PASTERNAK, P.L., prof., retsenzent; SHUBIN, K.A., inzh., retsenzent; TEMKIN, L.Ye., inzh., nauchnyy red.; KOTIK, B.A., red. izd-va; GORYACHEVA, T.V., red.izd-va; MEDVEDEV, L.Ya., tekhn.red.

[Handbook for designers] Spravochnik proektirovshchika. Pod obshchei red. V.I.Murasheva. Moskva, Gos.izd-vo lit-ry po stroit., arkhit. i stroit.materialam. Vol.5. [Precast reinforced concrete construction elements] Sbornye zhelezobetonnye konstruktsii. 1959. 603 p. (MIRA 12:12)

1. Akademiya stroitel'stva i arkhitektury SSSR. Nauchno-issledovatel'skiy institut betona i zhelezobetona, Perovo. 2. Deystvitel'nyy chlen Akademii stroitel'stva i arkhitektury SSSR (for Murashev, Gvozdev, Mikhaylov, V.V., Pasternak, Shubin). 3. Chlen-korresp. Akademii stroitel'stva i arkhitektury SSSR (for Mironov, Gusev, Moskvin, Kurek).

(Precast concrete construction).

APPROVED FOR RELEASE: 06/23/11: CIA-RDP86-00513R001031400005-6

APPROVED FOR RELEASE: 06/23/11: CIA-RDP86-00513R001031400005-6

MURASHEV, V.A., prof., doktor tekhn.nauk; MIRONOV, S.A., prof., doktor tekhn.nauk; ALEKSANDROVSKIY, S.V., kand.tekhn.nauk; TAL', K.E., kand.tekhn.nauk; DMITRIYEV, S.A., kand.tekhn.nauk; MULIN, N.M., kand.tekhn.nauk; SIGALOV, E.Ye., kand.tekhn.nauk; NEMIROVSKIY, Ya.M., kand.tekhn.nauk; TABENKIN, N.L., inzh. [deceased]; KALATUROV, B.A., kand.tekhn.nauk; BRAUDE, Z.I., inzh.; KRYLOV, S.M., kand.tekhn.nauk; FOKIN, K.F., doktor tekhn.nauk; GUSEV, N.M., prof., doktor tekhn.nauk; YAKOVLEV, A.I., inzh.; KORENEV, B.G., prof., doktor tekhn.nauk; DERESHKEVICH, Yu.V., inzh.; MOSKVIN, V.M.; LUR'YE, L.L., inzh.; MAKARICHEV, V.V., kand.tekhn.nauk; SHEVCHENKO, V.A., inzh.; VASIL'YEV, B.F., inzh.; KOSTYUKOVSKIY, M.G., kand.tekhn.nauk; MAGARIK, I.L., inzh.; IL'YASHEVSKIY, Ya.A., inzh.; LARIKOV, A.F., inzh.; STULOV, T.T., inzh.; TRUSOV, L.P., inzh.; LYUDKOVSKIY, I.G., kand.tekhn.nauk; POPOV, A.N., kand.tekhn. nauk; VINOGRADOV, N.M., inzh.; USHAKOV, N.A., kand.tekhn.nauk; SVERDLOV, P.M., inzh.; TER-OVANESOV, G.S., inzh.; GLADKOV, B.N., kand.tekhn.nauk; KOSTOCHKINA, G.V., arkh.; KUREK, N.M.; OSTROVSKIY, M.V., kand.tekhn.nauk; PEREL'SHTEYN, Z.M., inzh.; BUKSHTEYN, D.I., inzh.;

(Continued on next card)

APPROVED FOR RELEASE: 06/23/11: CIA-RDP86-00513R001031400005-6

APPROVED FOR RELEASE: 06/23/11: CIA-RDP86-00513R001031400005-6

MAKARICHEV, V.V., kand.tekhn.nauk; MATSELINSKIY, R.N., kand.tekhn. nauk; GORYACHEVA, T.V., red.izd-va; RUDAKOVA, N.I., tekhn.red.

[Large-panel reinforced concrete members of industrial buildings; results of design developments and experimental studies] Krupnopanel'nye zhelezobetonnye konstruktsii proizvodstvennykh zdanii. Moskva, Gos. izd-vo lit-ry po stroit., arkhit, i stroit. materialam, 1959. 101 p. (Akademiia stroitel'stva i arkhitektury SSSR. Institut betona i zhelezobetona. Perovo. Nauchnoe soobshchenie, no.6) (MIRA 12:9)

(Precast concrete construction)
(Factories--Design and construction)

APPROVED FOR RELEASE: 06/23/11: CIA-RDP86-00513R001031400005-6

APPROVED FOR RELEASE: 06/23/11: CIA-RDP86-00513R001031400005-6

97-5-5/13

Principles of the calculation of structural elements of blocks of flats constructed of cellular concrete. (Cont.)

2 t, they can be transported by light lorries and assembled by ordinary cranes. The joints are running along the window openings and the internal panels are 1.45 m wide and 3.04 m high. (The Leningrad Gorstroy project uses internal panels 1.4 x 2.84 m in size). The floor construction consists of slabs of 1.45 m wide and 3.6 m long. The maximum discrepancy of the units supported on the walls was proved to be allowed in the limits ± 20 mm. For mass production bigger discrepancies are acceptable and it is suggested that eccentricities of ± 40 mm can be allowed. The supported ends of the panels present considerable jointing problems as considerable compression occurs especially in the case of large eccentricities which often cause failures. The TsNIPS (ЦНИПС) investigated these problems on solid and hollow panels during 1955 (viz. Fig.3). The cellular panels are manufactured in the above factory by the autoclave process. The quality of the mix (according to tests on cubes of 200 m^3) has a crushing strength of 130 - 200 kg/cm^2. The internal load-bearing slabs should be made of a 20% stronger mix than that determined by calculations, i.e. the crushing strength should be 100 - 110 kg/cm^2 instead of 80 - 90 kg/cm^2.

Card 2/3

APPROVED FOR RELEASE: 06/23/11: CIA-RDP86-00513R001031400005-6

APPROVED FOR RELEASE: 06/23/11: CIA-RDP86-00513R001031400005-6

AUTHOR: Makarichev, V.V. (Cand.Tech.Sci.) 97-5-5/13

TITLE: Principles of the calculation of structural elements of blocks of flats constructed of cellular concrete. (Printsipy razcheta konstruktsiy sbornykh zhilykh domov iz yacheistykh betonov).

PERIODICAL: "Beton i Zhelezobeton" (Concrete and Reinforced Concrete) 1957, No.5, pp.202 - 205 (USSR).

ABSTRACT: The Building Trust Sevuraltyazhstroy, in Berezniki, erected blocks of flats of frameless panel cellular concrete constructions. These blocks are prefabricated by means of autoclaves of 2 m and 2.6 m diameter. This frameless panel construction uses load-bearing partitions spaced approximately 3.6 m apart. The floor slabs rest on these partitions. The external slabs are not load-bearing. The cellular concrete for the external walls weighs 800 kg/m^3 and has a crushing strength 40 - 50 kg/cm^2. The concrete of the internal partitions has a crushing strength of 100 - 150 kg/cm^2. A foamless ash-silicate mix weighing 1400 - 1800 kg/m^3 was also used for the concrete of internal partitions. The jointing of all the slabs is achieved by means of steel bands which are welded to special steel anchors. The panels are relatively light and weigh only

Card 1/3

APPROVED FOR RELEASE: 06/23/11: CIA-RDP86-00513R001031400005-6

APPROVED FOR RELEASE: 06/23/11: CIA-RDP86-00513R001031400005-6

MAKARICHEV, V., kand. tekhn. nauk.

Production and use of porous concretes in Sweden. Stroi. mat. 3 no.12:32-35 D '57. (MIRA 11:2)
(Sweden--Air-entrained concrete)

APPROVED FOR RELEASE: 06/23/11: CIA-RDP86-00513R001031400005-6