APPROVED FOR RELEASE: 06/23/11: CIA-RDP86-00513R001031500012-6

PETRENKO, M.B.; GLUSHCHENKO, V.V. [Hlushchenko, V.V.];
MAKHIN'KO, N.V. [Makhin'ko, N.M.]

Activity of microbiological processes in chestnut soils. Mikrobiol. zhur. 27 no.6:16-20 '65. (MIRA 19:1)

1. Khar'kovskiy gosudarstvennyy universitet im. Gor'kogo.

APPROVED FOR RELEASE: 06/23/11: CIA-RDP86-00513R001031500012-6

APPROVED FOR RELEASE: 06/23/11: CIA-RDP86-00513R001031500012-6

L 29867-66

ACC NR: AP6013213

velocity of the elastic wave in the liquid filling the pipeline; x is the coordinate along the axis of the pipeline, calculated from its beginning; τ is the time. After transformation, the general solution can be brought into the form

$$G_1(x_1, \tau) = \exp(-a\tau) \sum_{k=1}^{\infty} A_{1k} \sin\left(\frac{\omega_k x_1}{c_1} + \varphi_{1k}\right) \sin\left(\sqrt{\omega_k^2 - a^2}\,\tau + \psi_k\right)$$

$$\cdots\cdots\cdots\cdots\cdots\cdots\cdots\cdots \qquad (1.3)$$

$$G_n(x_n, \tau) = \exp(-a\tau) \sum_{k=1}^{\infty} A_{nk} \sin\left(\frac{\omega_k x_n}{c_n} + \varphi_{nk}\right) \sin\left(\sqrt{\omega_k^2 - a^2}\,\tau + \psi_k\right)$$

where A_k, φ_k, and ψ_k are arbitrary constants determined by the initial and boundary conditions; ω_k are the natural values. The article first treats the problem of determining the natural vibration frequency of a liquid in pipelines connected in series, and then takes up the question of the same determination in branched pipelines. Orig. art. has: 28 formulas.

SUB CODE: 20/ SUBM DATE: 03Apr64/ ORIG REF: 004

Card: 2/2

APPROVED FOR RELEASE: 06/23/11: CIA-RDP86-00513R001031500012-6

APPROVED FOR RELEASE: 06/23/11: CIA-RDP86-00513R001031500012-6

L 29867-66 EWT(1)/EWP(m)/EWT(m)/T WW/DJ/JAJ

ACC NR: AP6013213 SOURCE CODE: UR/0421/66/000/002/0133/0136 5/8

AUTHOR: Velik, N. P. (Dnepropetrovsk); Mekhin, V. A. (Dnepropetrovsk); Prisnyakov, V. F. (Dnepropetrovsk)

ORG: none

TITLE: Determination of the natural vibration frequencies of liquids in complex pipelines

SOURCE: AN SSSR. Izvestiya. Mekhanika zhidkosti i gaza, no. 2, 1966, 133-136

TOPIC TAGS: pipeline, liquid flow

ABSTRACT: The article considers a complex hydraulic system consisting of n individual pipelines, with a homogeneous liquid; the pipelines have a constant elastic characteristic over their length. The wave type process in the system will then be described by the equations:

$$\frac{\partial^2 G_1}{\partial \tau^2} + 2a\frac{\partial G_1}{\partial \tau} = c_1^2 \frac{\partial^2 G_1}{\partial x_1^2}, \ldots, \quad \frac{\partial^2 G_n}{\partial \tau^2} + 2a\frac{\partial G_n}{\partial \tau} = c_n^2 \frac{\partial^2 G_n}{\partial x_n^2} \qquad (1.1)$$

Here G is the mass flow rate per second of the liquid; a is the decrement of the damping of the wave type process; c is the propagation

Card 1/2

APPROVED FOR RELEASE: 06/23/11: CIA-RDP86-00513R001031500012-6

APPROVED FOR RELEASE: 06/23/11: CIA-RDP86-00513R001031500012-6

L 45962-66

ACC NR: AT6025829

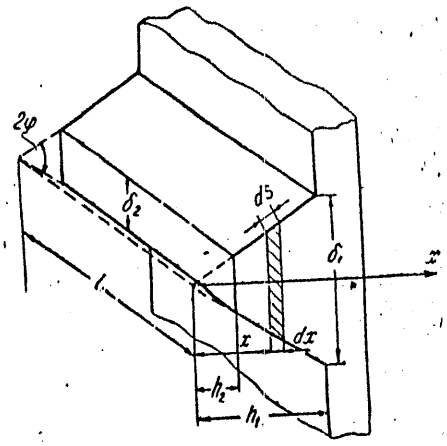

SUB CODE: 20/ SUBM DATE: None/ ORIG REF: 004/ OTH REF: 001

hs

Card 2/2

APPROVED FOR RELEASE: 06/23/11: CIA-RDP86-00513R001031500012-6

APPROVED FOR RELEASE: 06/23/11: CIA-RDP86-00513R001031500012-6

L 45962-66 EWT(1) WW/JT

ACC NR: AT6025829 (N) SOURCE CODE: UR/3207/65/000/001/0043/0046

AUTHOR: Makhin, V. A.; Belik, N. P.; Kosarev, D. A.

ORG: Dnepropetrovsk State University (Dnepropetrovskiy gosudarstvennyy universitet)

TITLE: Calculation of heat transfer in straight ribs of variable thickness

SOURCE: Gidroaeromekhanika (Hydroaeromechanics), no. 1, Kharkov, Izd-vo Khar'kovskogo univ., 1965, 43-46

TOPIC TAGS: heat transfer coefficient, radiative heat transfer

ABSTRACT: Heat transfer through straight ribs of triangular and trapezoidal cross section is considered and the problem of optimum rib profile is solved. It is assumed in the calculations that heat from the rib is transferred to the projection of the actual exposed surface on the vertical plane, i. e. ds is assumed to be equal to dx (see figure). This assumption leads to considerable errors if there is a noticeable difference between ds and dx. It is shown that the optimum rib has a profile bounded by two arcs of radius $R=\lambda/\alpha$, where λ is the coefficient of thermal conductivity for the material of the rib and α is the heat transfer coefficient from the rib to the ambient medium. Orig. art. has: 2 figures, 11 formulas.

Card 1/2

APPROVED FOR RELEASE: 06/23/11: CIA-RDP86-00513R001031500012-6

APPROVED FOR RELEASE: 06/23/11: CIA-RDP86-00513R001031500012-6

MAKHININ, V.A.

Muscovite mineralization in pegmatites of the Stanovoy Range. Sov. geol. 5 no.5:143-146 My '62. (MIRA 15:7)

1. Dal'ne-Vostochnoye geologicheskoye upravleniye.
(Stanovoy Range--Muscovite) (Stanovoy Range--Pegmatites)

APPROVED FOR RELEASE: 06/23/11: CIA-RDP86-00513R001031500012-6

APPROVED FOR RELEASE: 06/23/11: CIA-RDP86-00513R001031500012-6

APPROVED FOR RELEASE: 06/23/11: CIA-RDP86-00513R001031500012-6

APPROVED FOR RELEASE: 06/23/11: CIA-RDP86-00513R001031500012-6

MAKHININ, V.A.

Mineralogy of glauconites from Oligocene deposits of the Ukrainian crystalline massif. Min.sbor. no.5:219-226 '51. (MLRA 9:12)

1. Dal'geolupravleniye, Khabarovsk.
(Ukraine--Glauconite)

APPROVED FOR RELEASE: 06/23/11: CIA-RDP86-00513R001031500012-6

APPROVED FOR RELEASE: 06/23/11: CIA-RDP86-00513R001031500012-6

MAKHININ, V. A.

MAKHININ, V. A.

35903. Gidromuskovit Iz Nizhnekamenndugol'nykh Otlozheniy L'vouskoy Mul'ky. Mineral. Sbornik(L'vov), No. 3, 1949, S. 204-09.

Letopis' Zhurnal'nykh Statey, No. 49, 1949

APPROVED FOR RELEASE: 06/23/11: CIA-RDP86-00513R001031500012-6

APPROVED FOR RELEASE: 06/23/11: CIA-RDP86-00513R001031500012-6

MAKHININ, V.A.

35943 genezis granatov V pegmatitakh srenego pridneprovya V ogl: D. (?) A. makhinin. mineral. sbornik (l'vov), No. 3, 1949, S. 75-86

SO: Letopis' Zhurnal'nykh Statey, No. 49, 1949

APPROVED FOR RELEASE: 06/23/11: CIA-RDP86-00513R001031500012-6

APPROVED FOR RELEASE: 06/23/11: CIA-RDP86-00513R001031500012-6

MAKHININ, V. [illegible].

Makhinin, V. [illegible]. "On the relationship between the composition and optical properties of Beregovsk Kholuger' alunite," Mineral. sbornik, No. 2, 1948, p. 206-09

SO: [illegible] - 3850, 16 June 53, (Letopis 'Zhurnal 'nykh Statey, No. 5, 1949).

APPROVED FOR RELEASE: 06/23/11: CIA-RDP86-00513R001031500012-6

APPROVED FOR RELEASE: 06/23/11: CIA-RDP86-00513R001031500012-6

MAKHINENKO, A.I., kand. med. nauk

Some sanitary and technical measures for cellulose and paper factories in Finland. Gig. i san. 28 no.6:83-85 Je'63 (MIRA17:4)

1.1. Iz kafedry obshchey gigiyeny Leningradskogo sanitarno-gigiyenicheskogo meditsinskogo instituta.

APPROVED FOR RELEASE: 06/23/11: CIA-RDP86-00513R001031500012-6

APPROVED FOR RELEASE: 06/23/11: CIA-RDP86-00513R001031500012-6

DIKUN, P.P., kand.fiziko-matematicheskikh nauk; MAKHINENKO, A.I., kand. med.nauk

Content of 3,4-benzopyrene in the sewage and in the water reservoir of the combine "Slantsy". Gig. i san. 28 no.1:10-12 Ja'63. (MIRA 16:7)

1. Iz Instituta onkologii AMN SSSR i kafedry kommunal'noy gigiyeny Leningradskogo sanitarno-gigiyenicheskogo instituta.
(PLYUSSA RIVER--WATER--POLLUTION)

APPROVED FOR RELEASE: 06/23/11: CIA-RDP86-00513R001031500012-6

APPROVED FOR RELEASE: 06/23/11: CIA-RDP86-00513R001031500012-6

MAKHINENKO, A.I.; TEPLYAKOVA, Ye.V.

Effect of waste waters from the gas slate industry on the sanitary state of the Plyussa River and the Narva Reservoir. Trudy LSGMI no.68:161-166 '61. (MIRA 15:11)

1. Kafedra kommunal'noy gigiyeny Leningradskogo sanitarno-gigiyenicheskogo meditsinskogo instituta (zav. kafedroy - prof. A.I.Shtreys).

(PLYUSSA RIVER--WATER--POLLUTION)
(NARVA RESERVOIR--WATER--POLLUTION)
(INDUSTRIAL WASTES)

APPROVED FOR RELEASE: 06/23/11: CIA-RDP86-00513R001031500012-6

APPROVED FOR RELEASE: 06/23/11: CIA-RDP86-00513R001031500012-6

MAKHINENKO, A. I., Cand Med Sci -- (diss) "Sanitary condition of the Volkhov River in the rayon of the city of Volkhov and its effect on the health of the population." Leningrad, 1960. 12 pp; (Ministry of Public Health RSFSR, Leningrad Sanitary-Hygienic Medical Inst.); 300 copies; free; (KL, 24-60, 135)

APPROVED FOR RELEASE: 06/23/11: CIA-RDP86-00513R001031500012-6

APPROVED FOR RELEASE: 06/23/11: CIA-RDP86-00513R001031500012-6

MAKHINENKO, A.I.

Sanitary condition of the Volkhov River area and its influence on the health of the populace [with summary in English]. Trudy LSGMI 44:53-64 '58 (MIRA 11:12)

1. Kafedra obshchey gigiyeny Leningradskogo sanitarno-gigiyenicheskogo meditsinskogo instituta (zav. kafedroy - chlen-korrespondent AMN SSSR prof. R.A. Babayants).
(WATER POLLUTION,
of Volkhov River in Volkhov area, eff. on pub. health (Rus))
(PUBLIC HEALTH,
eff. of pollution of Vokhov River area (Rus))

APPROVED FOR RELEASE: 06/23/11: CIA-RDP86-00513R001031500012-6

APPROVED FOR RELEASE: 06/23/11: CIA-RDP86-00513R001031500012-6

MAKHINENKO, A. I.

BABAYANTS, R.A., professor; BATMANOVA, O.Ya., kand.med.nauk; VOLKOVA, N.V., kand.med.nauk; KIYAMOV, N.V., kand.med.nauk; LYKOVA, A.S., kand. med.nauk; MASOL'NIKOVA, T.K., kand.med.nauk; RUDEYKO, V.A., kand. med.nauk; TOMILINA, K.A., kand.med.nauk; SHISTOVSKIY, S.P., kand. med.nauk; KIRPICHEV, M.P., sanitarnyy vrach; MAKHINENKO, A.I., sanitarnyy vrach; OSHCHEPKOV, A.A., sanitarnyy vrach; PETROV, A.M., sanitarnyy vrach; ROSHAL', M.A., sanitarnyy vrach; SHEPELIN, O.P., sanitarnyy vrach

Sewage irrigation of fields and sanitation of natural waters. Gig. i san. 22 no.9:64-67 S '57. (MIRA 10:12)

1. Zaveduyushchiy kafedroy Obshchey Gigiyeny Leningradskogo sanitarno-gigiyenicheskogo meditsinskogo instituta, chlen-korrespondent AMN SSSR (for Babayants)

(WATER SUPPLY WATER POLLUTION
sanitary protection of water reservoirs in use of sewage water for field irrigation)
(IRRIGATION
same)

APPROVED FOR RELEASE: 06/23/11: CIA-RDP86-00513R001031500012-6

APPROVED FOR RELEASE: 06/23/11: CIA-RDP86-00513R001031500012-6

MAKHINA, Yu.

MAKHINA, Yu.; AZARNOVA, B.

[redacted]

Lenin's mother. Rabotnitsa 35 no.8:4-6 Ag '57. (MIRA 10:9)
(Ul'ianova, Mariia Aleksandrovna, 1835-1916)

APPROVED FOR RELEASE: 06/23/11: CIA-RDP86-00513R001031500012-6

APPROVED FOR RELEASE: 06/23/11: CIA-RDP86-00513R001031500012-6

MAKHINA, T., mladshiy nauchnyy sotrudnik

Departmental housing and government money. Zhil.-kom. khoz. 13 no.5:16-17 My '63. (MIRA 16:8)

1. Nauchno-issledovatel'skaya laboratoriya Odesskogo kreditno-ekonomicheskogo instituta.
(Housing management—Accounting)

APPROVED FOR RELEASE: 06/23/11: CIA-RDP86-00513R001031500012-6

APPROVED FOR RELEASE: 06/23/11: CIA-RDP86-00513R001031500012-6

SHAPET'KO, N.N.; SERGEYEV, N.M.; PETRIY, O.P.; TALALAYEVA, T.V.; MAKHINA, A.A.

Nuclear magnetic resonance spectra of F^{19} in Fluorostilbenes. Zhur. strukt. khim. 6 no.1:158-159 Ja-F '65. (MIRA 18:12)

1. Fiziko-khimicheskiy institut imeni L.Ya.Karpova. Submitted August 10, 1964.

APPROVED FOR RELEASE: 06/23/11: CIA-RDP86-00513R001031500012-6

APPROVED FOR RELEASE: 06/23/11: CIA-RDP86-00513R001031500012-6

ACC NR: AR6020929 SOURCE CODE: UR/0196/66/000/002/I036/I036 2

AUTHOR: [illegible], A. M.; Shapiro, S. V.; Blinov, I. V.; Yemol'yanov, V. P.; Zakharov, N.V. Makhin, Yu. I.; Roginskaya, L. E.

TITLE: Single-stage static ferromagnetic frequency multipliers with ratios 8 and 9

SOURCE: Ref. zh. Elektrotekhn i energ, Abs. [illegible]

REF SOURCE. Tr. Gor'kovsk. politekh. in-ta, v. 20, no. 6, 1965, 5-11

TOPIC TAGS: frequency multiplication, frequency octupler, ferromagnetic material

ABSTRACT: Two single-stage static ferromagnetic frequency multipliers with a magnetic bias produced by intermediate-frequency currents are described. The frequency octupler has 8 saturated cores. Its primary windings supplied by a 3-phase system are connected in a zigzag circuit in such a way that the core fluxes form a symmetrical 8-phase system. In addition, the octupler has secondary (output) windings, and also magnetization and self-magnetization windings fed at frequencies 2 and 4 times the supply frequency. The latter windings are connected to capacitors. The 9-ratio multiplier has 9 cores. In addition to the primary, secondary, and self-magnetization windings, this multiplier has a self-magnetization winding operating at a triple-supply frequency. Characteristics of experimental models of 2-kva and 900-va multipliers, respectively, are presented. The 2-kva octupler has an efficiency of 65%, weight, 60 kg; the 9-ratio multiplier, 70%, 40 kg. Both have a near-sinusoid output voltage wave; they have a fairly hard external characteristic: the no-load to full-load voltage regulation is 20%. Engineering design methods are given. Six figures. Bib. of

Card 1/1 9 titles. S.Shapiro SUB CODE: 09 UDC:621.314.263.001.24

APPROVED FOR RELEASE: 06/23/11: CIA-RDP86-00513R001031500012-6

APPROVED FOR RELEASE: 06/23/11: CIA-RDP86-00513R001031500012-6

ACC NR: AR6028422

nominal value. The octupler output voltage can be regulated within ± 15% by controlling its magnetization current. The efficiency of the 1.5-ratio frequency changer is 60--70%. It is capable of stable operation despite input voltage and load variations within ± 50% of their nominal values. Four figures. Bibliography of 4 titles. S. Shapiro [Translation of abstract]

SUB CODE: 09

Card 2/2

APPROVED FOR RELEASE: 06/23/11: CIA-RDP86-00513R001031500012-6

APPROVED FOR RELEASE: 06/23/11: CIA-RDP86-00513R001031500012-6

ACC NR: AR6028422 SOURCE CODE: UR/0196/66/000/005/I034/I034

AUTHOR: Bamdas, A. M.; Shapiro, S. V.; Yemel'yanov, V. P.; Yevstigneyova, T. A.; Blinov, I. V.; Davydova, L. N.; Zakharov, N. V.; Makhin, Yu. I.; Roginskaya, L. E.; Frolov, V. T.

TITLE: Development work on static frequency changers in the Gor'kiy Polytechnic Institute im. A. A. Zhdanov

SOURCE: Ref. zh. Elektrotekhnika i energetika, Abs. 5I205

REF SOURCE: Sb. Vses. nauchno-tekhn. konferentsiya po primeneniyu vysokoskorostn. mashin s elektroprivodom povyshen. chastoty toka v nar. kh-ve. Ordzhonikidze, 1945, 47-51

TOPIC TAGS: frequency changer, frequency converter, frequency conversion

ABSTRACT: The Laboratory has developed static ferromagnetic quadruplers, octuplers, and nonuplers with self-magnetization by flux intermediate harmonics, with single- and 3-phase output; also, a 1.5-ratio frequency changer has been developed. Their principal characteristics, power and weight data are reported. Specifically, the weight of active material varies from 36 to 29 kg/kva for capacities 1--6 kva; efficiency, 70--80%. With an input voltage variation of 90-110%, the quadrupler voltage varies only by ± 5--8%. The output voltage of a negative-feedback-type octupler varies only by ± 2% with a load current varying from zero to 130% its

Card 1/2L UDC: 621.314.26

APPROVED FOR RELEASE: 06/23/11: CIA-RDP86-00513R001031500012-6

APPROVED FOR RELEASE: 06/23/11: CIA-RDP86-00513R001031500012-6

L 10006-67

ACC NR: AT6023389

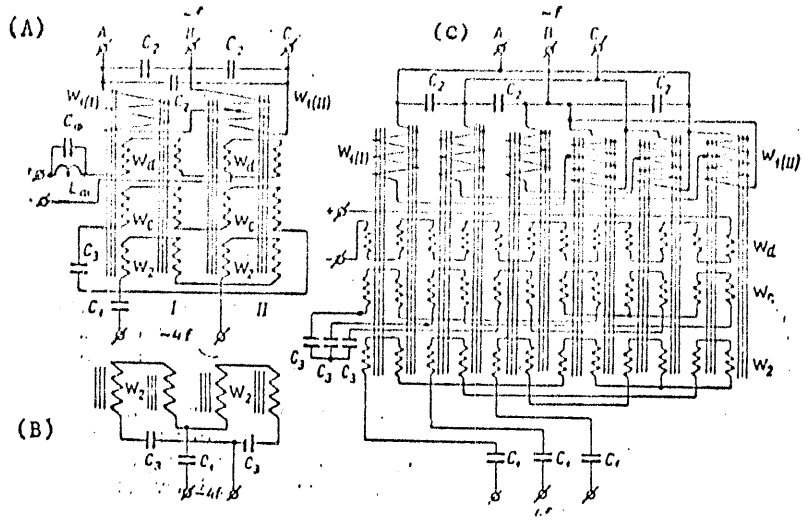

Fig. 1

and 3.6 KVA) were fabricated and tested. The efficiency was 5 to 10% higher than in conventional models and a 30-40% saving in copper and steel was possible. Orig. art. has: 3 figures.

SUB CODE: 09/ SUBM DATE: 20Sep65/ ORIG REF: 003

Card 3/3 FV

APPROVED FOR RELEASE: 06/23/11: CIA-RDP86-00513R001031500012-6

APPROVED FOR RELEASE: 06/23/11: CIA-RDP86-00513R001031500012-6

rated simultaneously by both processes. Figure 1 shows a single phase output converter (A); three phase output converter (C), essentially a combination of three single phase converters shown in (A); and a modification of the 4f output circuit for single phase output. Referring to part A, of figure 1, the unit consists of elements I and II. Each element has two cores, two primary windings ($W_{1(I)}$ and $W_{1(II)}$), which are compensated by three capacitors C_2, a secondary winding W_2, a dc bias winding W_d, and a second harmonic excitation winding W_c. The primary is supplied from a three phase line. Capacitor C_1 is used for series compensation of the output. The magnetic fluxes in all four cores have identical waveforms but are displaced with respect to each other by one quarter of the input power period. Hence, the flux fundamental components are displaced by a quarter period, the second harmonics--by a half period, and the fourth harmonics by a whole period. Consequently, in windings W_d and W_2, the fundamental and second harmonics are cancelled, but the fourth harmonics are added, generating an output of quadrupled frequency. In the winding W_c, the fundamental and fourth harmonics are cancelled but the second harmonics are added. The current in this winding leads the second harmonic input voltage by 90°. As the result, the magnetizing force due to this current contributes to the periodic saturation of the magnetic cores and therefore, increases the 4f output voltage of the converter. Five experimental single phase models (0.5, 1.0, 1.2, 1.6, and 1.9 KVA) and two three phase models (3.0

APPROVED FOR RELEASE: 06/23/11: CIA-RDP86-00513R001031500012-6

APPROVED FOR RELEASE: 06/23/11: CIA-RDP86-00513R001031500012-6

L 10006-67 EWP(k)/EWT(d)/EWT(1)/EWP(h)/EWP(1)/EWP(v) GD

ACC NR: AT6023389 (N) SOURCE CODE: UR/0000/65/000/000/0179/0182

AUTHOR: Ramdas, A. M. (Gor'kiy); Zakharov, N. V. (Gor'kiy); Makhin, Yu. I. (Gor'kiy); Shapiro, S. V. (Gor'kiy)

ORG: none

TITLE: Ferromagnetic frequency converter for automatic regulators

SOURCE: Vsesoyuznaya konferentsiya po avtomaticheskomu kontrolyu i metodam elektricheskikh izmereniy. 5th, Novosibirsk, 1963. Avtomaticheskiy kontrol' i metody elektricheskikh izmereniy; trudy konferentsii. t. I: Metody elektricheskikh izmereniy. Tsifrovye izmeritel'nye pribory. Elementy izmeritel'nykh sistem (Automatic control and electrical measuring techniques; transactions of the conference. v. 1: Electrical measuring techniques. Digital measuring instruments. Elements of measuring systems). Novosibirsk, Izd-vo Nauka, 1965, 179-182

TOPIC TAGS: frequency converter, frequency doubling, frequency multiplication, power frequency multiplier

ABSTRACT: A novel frequency quadrupler for high power applications is described. This converter is more efficient than existing types because a multiplication process is utilized in which the input frequency is quadrupled directly, as well as through two-stage process with intermediate doubling. The output is the sum of the energies gene-

Card 1/3

APPROVED FOR RELEASE: 06/23/11: CIA-RDP86-00513R001031500012-6

APPROVED FOR RELEASE: 06/23/11: CIA-RDP86-00513R001031500012-6

L 45169-66

ACC NR: AP6026346

FSPCh, some of which are indicated. The frequency doubler (FSPCh-2) (Fig. 1a) and the frequency quadrupler (FSPCh-4) (Fig. 1b) are described and the test results presented. Orig. art. has: 6 figures. [26]

SUB CODE: 09/ SUBM DATE: 24Sep65/ ORIG REF: 003/ ATD PRESS: 5081

Card 3/3

APPROVED FOR RELEASE: 06/23/11: CIA-RDP86-00513R001031500012-6

APPROVED FOR RELEASE: 06/23/11: CIA-RDP86-00513R001031500012-6

L 45169-66

ACC NR: AP6026346

switched into a d-c source through a "closing" circuit LφCφ. Longitudinal compensation capacitor, C_1, were switched into the secondary winding circuits. FSRCh for a higher frequency of power were designed according to circuits involving one-stage, cascade, and self-magnetization of the intermediate harmonics of the flow (Fig. 1). The cores of all the converters were made of brand 3000NM Mn-Zn ferrite. Tests showed several features of the

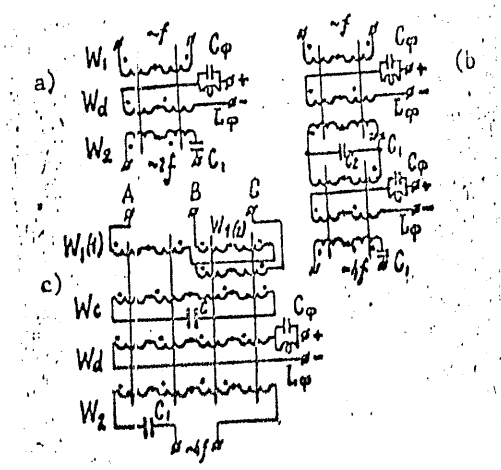

Figure 1. Static ferromagnetic frequency multiplier circuits

Card 2/3

APPROVED FOR RELEASE: 06/23/11: CIA-RDP86-00513R001031500012-6

APPROVED FOR RELEASE: 06/23/11: CIA-RDP86-00513R001031500012-6

L 45169-66 EWT(1)

ACC NR: AP6026346 SOURCE CODE: UR/0144/66/000/007/0797/0799

AUTHOR: Myasoyedov, V. Ye. (Aspirant); Makhin, Yu. I. (Aspirant)

ORG: [Myasoyedov] Department of Theoretical Principles of Electrical Engineering, Ivanovo Power Engineering Institute (Kafedra teoreticheskikh osnov elektrotekhniki Ivanovskogo energeticheskogo instituta); [Makhin] Department of Electrical Machines, Gor'kiy Polytechnic Institute (Kafedra elektricheskikh mashin Gor'kovskogo politekhnicheskogo instituta)

TITLE: Properties of high-frequency static ferromagnetic frequency converters with ferrite cores

SOURCE: IVUZ. Elektromekhanika, no. 7, 1966, 797-799

TOPIC TAGS: frequency converter, ferromagnetic material, circuit design, frequency multiplication, FERRITE

ABSTRACT: The Experimental Laboratory, Department of Electrical Machines and Instruments, Gor'kiy Polytechnic Institute im. A. A. Zhdanov (issledovatel'skaya laboratoriya kafedry elektricheskikh mashin i apparatov Gor'kovskogo politekhnicheskogo instituta) has manufactured and tested static ferromagnetic frequency converters with ferrite cores (FSPCh). Such converters may find extensive use in automation. The power of individual converters ranges from 30 to 200 w. Electromechanical generators (output voltage frequencies f_1 = 400, 1000, and 2500 cps) were used as power sources. The magnetization winding circuit was

Card 1/3 UDC: 621.314 1/5+621.3.042.15

APPROVED FOR RELEASE: 06/23/11: CIA-RDP86-00513R001031500012-6

APPROVED FOR RELEASE: 06/23/11: CIA-RDP86-00513R001031500012-6

BAMDAS, A.M., doktor tekhn. nauk; SHAPIRO, S.V., kand. tekhn. nauk; ZAKHAROV, N.V., inzh.; MAKHIN, Yu.I., inzh.

Two-stage ferromagnetic frequency multipliers. Vest. elektroprom. 34 no.7:67-70 Jl '63. (MIRA 16:8)

APPROVED FOR RELEASE: 06/23/11: CIA-RDP86-00513R001031500012-6

APPROVED FOR RELEASE: 06/23/11: CIA-RDP86-00513R001031500012-6

ACCESSION NR: AR4046562

energy is converted into quadruple-frequency energy by two ways: (1) directly and (2) via an internal cascade in which the frequency is first doubled and then quadrupled. Single-phase SFChP-4 have been developed for ratings of 0.5, 1.2, 1.5, 1.9 kva with an efficiency of about 80%. External characteristics of various SFChP-4 quadruplers are analyzed. Methods are set forth for designing a single-phase self-cooled multiplier intended for continuous operation. The design formulas are valid up to 10 kva and 100 cps (primary frequency). Self-magnetized 6, 8, and 9-times multipliers are briefly considered. A principal distiction of the above multipliers lies in the fact that, in addition to the direct generation of a higher harmonic, a stepwise frequency multiplication — first into an intermediate and then into the output frequency — takes place. Six illustrations. Bibliography: 7 titles.

SUB CODE: EC ENCL: 00

Card 1/2

APPROVED FOR RELEASE: 06/23/11: CIA-RDP86-00513R001031500012-6

APPROVED FOR RELEASE: 06/23/11: CIA-RDP86-00513R001031500012-6

[illegible] EWT(1) [illegible] IJP(c)

ACCESSION NR: AR4046362 S/0271/64/000/008/A011/A011

SOURCE: Ref. Uh. Avtomat., telemekhn. i vychisl. tekhn. Svodnyy tom, Abs. 8A85

AUTHOR: Bandas, [illegible] M.; Shapiro, S. V.; Zakharov, [illegible] V.; Makhin, Yu. I.

TITLE: Static ferromagnetic frequency multipliers self-magnetized by an intermediate harmonic of the flux

CITED SOURCE: Tr. Gor'kovsk. politekhn. in-ta, v. 19, no. 3, 1963, 33-42

TOPIC TAGS: frequency multiplier, frequency quadrupler / SPChP-4 quadrupler

TRANSLATION: An SPChP-4 ferromagnetic frequency quadrupler is described in which the second harmonic of the flux is used for self-magnetization. The quadrupler comprises two units with two identical conventional type cores in each. T-connected primaries of each unit are supplied by three-phase power. Each unit has three secondaries, the like windings being connected in opposition. The secondaries of the both units are connected in series. The magnetization winding is d-c supplied. In the output-winding and the magnetization-winding circuits, the fundamental and the second emf harmonics cancel out each other while the fourth harmonics are summed up. As a result, a voltage of the frequency four times as high as the supply frequency is generated at the SPChP-4 output. The fundamental-frequency

Card 1/2

APPROVED FOR RELEASE: 06/23/11: CIA-RDP86-00513R001031500012-6

APPROVED FOR RELEASE: 06/23/11: CIA-RDP86-00513R001031500012-6

MAKHIN, V.A.; PRISNYAKOV, V.F.; TOKAR', I.F.

Theory of the outflow of a boiling liquid through a centrifugal jet. Izv.vys.ucheb.zav.; av.tekh. 5 no.3:166-176 '62.
(MIRA 15:9)

(Fluid dynamics)

APPROVED FOR RELEASE: 06/23/11: CIA-RDP86-00513R001031500012-6

APPROVED FOR RELEASE: 06/23/11: CIA-RDP86-00513R001031500012-6

39046
S/124/62/000/007/009/027
D234/D308

Motion of the ...

force of a drop is neglected owing to its small size, 4) the evaporation of the drops is not taken into account. The coefficient of aerodynamic resistance of a drop is assumed to be the same as that of a rigid sphere. With the above assumptions, the equations of motion are integrated and formulas for the paths of the drops are obtained. These formulas make it possible to establish the form, dimensions and internal structure of a torch of pulverized fuel in a turbulent air stream for both the case of fuel motion along the air stream, and that of fuel motion against the air stream. Besides, these formulas make it possible to determine the parameters of the ring zone of the torch. Conclusions are made concerning the separation of the drops according to size, recommendations are given for correct positioning of the atomizer in the chamber. 4 references. /Abstracter's note: Complete translation./

Card 2/2

APPROVED FOR RELEASE: 06/23/11: CIA-RDP86-00513R001031500012-6

APPROVED FOR RELEASE: 06/23/11: CIA-RDP86-00513R001031500012-6

39046
S/124/62/000/007/009/027
D234/D308

26.2131

AUTHOR: Makhin, V. A.

TITLE: Motion of the drops of a pulverized liquid in a turbulent air stream

PERIODICAL: Referativnyy zhurnal, Mekhanika, no. 7, 1962, 33, abstract 7B216 (Nauchn. zap. Dnepropetr. un-t, 1961, 55, 11-24)

TEXT: On the basis of experimental data, the author analyzes the structure of a turbulent air stream in the cylindrical combustion chamber of a gas turbine engine. He deduces the equation of motion of the drops of atomized liquid, injected by a centrifugal atomizer into the air stream which is agitated by means of the whirling device of the chamber. The author takes as a physical model of the fuel stream the separate drops entering the air stream with a velocity equal to the velocity of the emerging fuel jet. The following assumptions are made: 1) The drops are aerodynamically isolated from each other, 2) the drops are spherical, 3) the gravitational

Card 1/2

APPROVED FOR RELEASE: 06/23/11: CIA-RDP86-00513R001031500012-6

APPROVED FOR RELEASE: 06/23/11: CIA-RDP86-00513R001031500012-6

Design of diaphragms ...

S/145/61/000/007/005/009
D221/D301

ASSOCIATION: Leningradskiy politekhnicheskiy institut (Leningrad Polytechnic Institute)

SUBMITTED: May 21, 1960

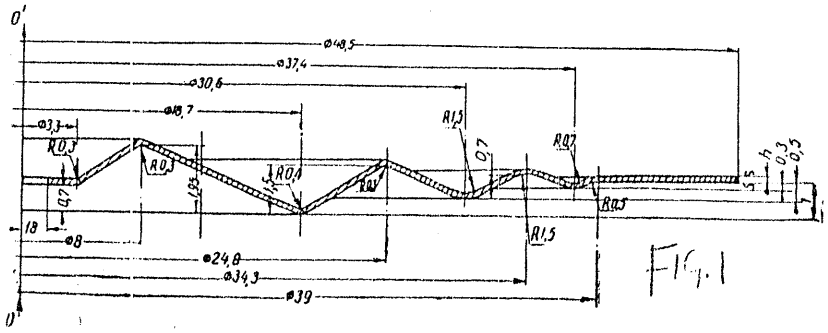

Fig. 1

Рис. 1

Card 4/4

APPROVED FOR RELEASE: 06/23/11: CIA-RDP86-00513R001031500012-6

APPROVED FOR RELEASE: 06/23/11: CIA-RDP86-00513R001031500012-6

Its solution determines the angle of rotation O. A substitution reduces (12) to an inhomogeneous degenerate hypergeometric equation which is solved with the aid of power series, but the latter converges too slowly and is useless for practical purposes. Therefore (12) was solved with the aid of Galerkin's method. For simplification purposes' the central part is replaced by a rigid center, and a simple expression is chosen for the angle of rotation. The final result for the dependence of rigidity on thickness is Eq. (24).

$$\alpha = \frac{[0,02552h^2 + 0,00052]\,hE}{3,20360 \cdot 0,00938} \cdot 10^{-2}$$

The results are compared with experimental data and found to be satisfactory. The method was also applied to an aluminum diaphragm of a similar form contracted twice in a vertical direction and $\sqrt{2}$ times in a radial direction: the results are quoted. There are 7 figures and 4 references: 3 Soviet-bloc and 1 non-Soviet-bloc. The reference to the English-language publication reads as follows: I.A. Harring; The rigidity of corrugated diaphragms, Applied Sc. Rs., v. 2. ser. A. 1950.

APPROVED FOR RELEASE: 06/23/11: CIA-RDP86-00513R001031500012-6

APPROVED FOR RELEASE: 06/23/11: CIA-RDP86-00513R001031500012-6

S/145/61/000/007/005/009
D221/D301

Design of diaphragms ...

and bending strength of the plate and the diaphragm. The authors determine the reduction factors for a diaphragm with the form of Fig. 1, the diaphragm being divided into five sections and each section is treated separately. The step character of the factors is approximated by a continuous function. The final form of the differential equations is quoted for the case of a load of hydrostatic type (written in dimensionless quantities). For small sags of the plate it is possible to disregard the tensile deformations, and therefore, the solution is reduced to that of a linear differential equation of the second order. In the case of large sags, it is possible to neglect the deformations due to bending, and consider the diaphragm as being absolutely elastic. The load characteristic is then $p = \beta w_0^3$. In the general case, it is expressed by $p = \alpha w_0 + \beta w_0^3$. After some simplifications, the author deduces the approximate equation for the linear characteristics of the diaphragm Eq. (12):

$$\rho^2 \vartheta'' + \rho\vartheta' - [1 + \sigma(1 - \rho)^2] \vartheta = \beta_k \rho^3 \qquad (12)$$

Card 2/4

APPROVED FOR RELEASE: 06/23/11: CIA-RDP86-00513R001031500012-6

APPROVED FOR RELEASE: 06/23/11: CIA-RDP86-00513R001031500012-6

S/145/61/000/007/005/009
D221/D301

AUTHORS: Belyayeva, Ye. I., Candidate of Technical Sciences, and Makhin, V. A., Engineer

TITLE: Design of diaphragms with non-periodic profile and a linear characteristic for strength

PERIODICAL: Izvestiya vysshikh uchebnykh zavedeniy, Mashinostroyeniye, no. 7, 1961, 37-47

TEXT: The authors consider an approximate method of design for the linear characteristic of a diaphragm with aperiodic corrugations, based on a method proposed by L. Ye. Andreyeva. The diaphragm is replaced by a plane anisotropic plate of the same thickness. The elastic coefficients characterizing the rigidity of the plate with respect to expansion and bending can be represented by the modulus of elasticity of the corrugated diaphragm with the aid of corresponding reduction factors which depend only on the geometrical parameters of the corrugated diaphragm, and is determined from the condition of equality of tensile

Card 1/ 4

APPROVED FOR RELEASE: 06/23/11: CIA-RDP86-00513R001031500012-6

APPROVED FOR RELEASE: 06/23/11: CIA-RDP86-00513R001031500012-6

MAKHIN, M.; RUDERMAN, A.; TOLSTOV, A.

On the construction sites of the Rostov-on-Don Economic Region. Stroitel' no.8:3-6,11-15, 19 Ag '59. (MIRA 12:12)

1.Zamestitel' predsedatelya Rostovskogo sovnarkhoza (for Makhin). 2.Spetsial'nyye korrespondenty zhurnala "Stroitel'" (for Ruderman, Tolstov).
(Rostov Province--Construction industry)

APPROVED FOR RELEASE: 06/23/11: CIA-RDP86-00513R001031500012-6

APPROVED FOR RELEASE: 06/23/11: CIA-RDP86-00513R001031500012-6

SERYAKOV, Ivan Maksimovich; MAKHIN, V.A., red.; FEDOTOVA, A.F., tekhn.red.; MAKHOVA, N.N., tekhn.red.; VOLCHEK, V.L., tekhn.red.

[For the young motorist] Iunomy avtoliubiteliu. Moskva, Gos. uchebno-pedagog. izd-vo M-va prosv. RSFSR, 1958. 259 p. (MIRA 12:1)

(Automobile drivers) (Automobiles--Maintenance)

APPROVED FOR RELEASE: 06/23/11: CIA-RDP86-00513R001031500012-6

APPROVED FOR RELEASE: 06/23/11: CIA-RDP86-00513R001031500012-6

MAKHIN, Vladimir Aleksandrovich; ARGIR, Ivan Khristoforovich; PESTRYAKOV, A.I., redaktor; FEDOTOVA, A.F., tekhnicheskiy redaktor.

[Manual for chauffeurs, second class] Posobie dlia shofera vtorogo klassa. Moskva, Gos. izd-vo selkhoz. lit-ry, 1955 479 p.(MLRA 9:4)
(Automobiles--Maintenance)

APPROVED FOR RELEASE: 06/23/11: CIA-RDP86-00513R001031500012-6

APPROVED FOR RELEASE: 06/23/11: CIA-RDP86-00513R001031500012-6

MAKHIN, V.A.; ARGIR, I.Kh.

[Manual for the second-class chauffer] Uchebnik shofera vtorogo klassa. 2. perer.i dop.izd. Moskva, Gos. izd-vo sel'khoz. lit-ry, 1953. 334 p. (MLRA 6:10)

(Automobiles--Handbooks, manuals, etc.)

APPROVED FOR RELEASE: 06/23/11: CIA-RDP86-00513R001031500012-6

APPROVED FOR RELEASE: 06/23/11: CIA-RDP86-00513R001031500012-6

MAKHIN, P.A.

Efficiency of mining systems and methods of extracting very narrow veins. Izv. vys. ucheb. zav.; tsvet. met. 7 no. 4: 7-13 '64 (MIRA 19:1)

1. Novocherkasskij politekhnicheskiy institut, kafedra razrabotki rudnykh i nerudnykh mestorozhdeniy.

APPROVED FOR RELEASE: 06/23/11: CIA-RDP86-00513R001031500012-6

APPROVED FOR RELEASE: 06/23/11: CIA-RDP86-00513R001031500012-6

MAKHIN, P.A.; KARCHEVSKIY, V.K.

New drill bit with expander. Izv. vys. ucheb. zav.; tsvet. met. 5 no.2:17-21 '62. (MIRA 15:3)

1. Novocherkasskiy politekhnicheskiy institut, kafedra razrabotki rudnykh i nerudnykh mestorozhdeniy.
(Rock drills)

APPROVED FOR RELEASE: 06/23/11: CIA-RDP86-00513R001031500012-6

APPROVED FOR RELEASE: 06/23/11: CIA-RDP86-00513R001031500012-6

MAKHIN, P.A., prof., tekhn.nauk; ISKHAKOV, R.M., kand.tekhn.nauk

Training of specialists for open-pit mining. Gor.zhur. no.6:20-21 Je '60. (MIRA 14:2)

1. Novocherkasskiy politekhnicheskiy institut.
(Mining engineering--Study and teaching)

APPROVED FOR RELEASE: 06/23/11: CIA-RDP86-00513R001031500012-6

APPROVED FOR RELEASE: 06/23/11: CIA-RDP86-00513R001031500012-6

MAKHIN, P.A., professor, doktor tekhn.nauk

Effect of poor working on the efficiency of an enterprise mining extremely thin veins. Trudy NPI 49:135-153 '59. (MIRA 14:3)

1. Kafedra razrabotki rudnykh i nerudnykh mestorozhdeniy Novocherkasskogo politekhnicheskogo instituta.
(Mining engineering)

APPROVED FOR RELEASE: 06/23/11: CIA-RDP86-00513R001031500012-6

APPROVED FOR RELEASE: 06/23/11: CIA-RDP86-00513R001031500012-6

MAKHIN, P.A., prof.

Importance of the nature of selvages or contacts in working extremely thin veins. Izv. vys. ucheb. zav.; gor. zhur. no.9:9-15 '59. (MIRA 14:6)

1. Novocherkasskiy politekhnicheskiy institut. Rekomendovana kafedroy razrabotki rudnykh i nerudnykh mestorozhdeniy.
(Mines and mineral resources)

APPROVED FOR RELEASE: 06/23/11: CIA-RDP86-00513R001031500012-6

APPROVED FOR RELEASE: 06/23/11: CIA-RDP86-00513R001031500012-6

MAKHIN, P.A., prof.

Methods of determining mining method efficiency in mining very thin veins. Izv.vys.ucheb.zav.; gor.zhur. no.11:19-27 '58. (MIRA 12:8)

1. Novocherkasskiy politekhnicheskiy institut.
(Mining engineering--Costs)

APPROVED FOR RELEASE: 06/23/11: CIA-RDP86-00513R001031500012-6

APPROVED FOR RELEASE: 06/23/11: CIA-RDP86-00513R001031500012-6

SOV/149-58-4-23/26

Influence of Ore Impoverishment on the Economics of an Ore Mine with Very Thin Veins

studied hitherto. It is incorrect to assume that the cost increase is in direct ratio to the decrease in the width of the vein and the author recommends using a "contamination index" for such calculations. The losses of metal in the sorting and beneficiation operations increase sharply with increasing degree of impoverishment. There are 1 figure and 2 tables.

ASSOCATICN: Novocherkasskiy politekhnicheskiy institut. Kafedra razrabotki rudnykh mestorozhdeniy (Novocherkassk Polytechnical Institute. Chair of the Exploitation of Ore Deposits)

SUBMITTEL: June 7, 1958

Card 2/2

APPROVED FOR RELEASE: 06/23/11: CIA-RDP86-00513R001031500012-6

APPROVED FOR RELEASE: 06/23/11: CIA-RDP86-00513R001031500012-6

AUTHOR: Makhin, P. A. SOV/149-58-4-23/26

TITLE: Influence of Ore Impoverishment on the Economics of an Ore Mine with Very Thin Veins (Vliyaniye razubozhivaniya rudy na ekonomiku gornorudnogo predpriyatiya pri razrabotke ves'ma tonkikh zhil)

PERIODICAL: Izvestiya Vysshikh Uchebnykh Zavedeniy, Tsvetnaya Metallurgiya, 1958, Nr 4, pp 172-178 (USSR)

ABSTRACT: On an example of a tungsten mine, the author analyses mathematically the influence of impoverishment of the ore deposits on the economics of operation of the mine. The analysis is based on using a coefficient K which designates the quantity (tons) of rock for each 100 tons of ore and it is assumed that the side rocks do not contain any ore. The granulometric composition of the worked mass and the contents therein of various classes of metal have to be known in order to establish the limits of sorting of the rocks. The author arrives at the conclusion that the influence of ore impoverishment on technical and economic indices comply with relations which have to be known for solving numerous practical problems. These relations have not been adequately

Card 1/2

APPROVED FOR RELEASE: 06/23/11: CIA-RDP86-00513R001031500012-6

APPROVED FOR RELEASE: 06/23/11: CIA-RDP86-00513R001031500012-6

MAKHIN, P.A., prof.

Efficiency of boring and blasting operations for mining very thin seams. Izv.vys.ucheb.zav.; gor.zhur. no.3:27-35 '58. (MIRA 12:8)

1. Novocherkasskiy politekhnicheskiy institut.
(Mining engineering)

APPROVED FOR RELEASE: 06/23/11: CIA-RDP86-00513R001031500012-6

APPROVED FOR RELEASE: 06/23/11: CIA-RDP86-00513R001031500012-6

Effectiveness of Classification in Working Very Minute Veins 137-1958-1-102

of very thin veins of valuable ores, it is absolutely necessary to separate out the country rock before milling at the plant. The productivity of an underground sorter of mixed material is lower by a factor of about 1.7 than that of a worker at the surface. The cost of sorting 1 t country rock in the mine is about 1.9 times as high as at the surface. This difference in the cost of sorting 1 t of rock increases from 150 to 250 percent as size goes down from 150 to 25-50 mm. Losses of metal in underground sorting is about 18 percent higher than at the surface. This excess loss in underground sorting rises from 10 to 25 percent as size drops from 150 to 25-50. The metal content of mill tailings in the 25-50 and 50-100 mm fractions is 1.5 - 3 times as great as in the same fractions when sorted rock has been used. Formulas for calculating minimum fraction size for underground sorting and minimum sorting limit for the upper limit of unsortable fines.

A. Sh.

1. Tungsten ores--Production--Costs 2. Mines--Operation--Costs

Card 2/2

APPROVED FOR RELEASE: 06/23/11: CIA-RDP86-00513R001031500012-6

APPROVED FOR RELEASE: 06/23/11: CIA-RDP86-00513R001031500012-6

MAKHIN, P.A.

137-1958-1-102

Translation from: Referativnyy zhurnal, Metallurgiya, 1958, Nr 1, p 16 (USSR)

AUTHOR: Makhin, P. A.

TITLE: Effectiveness of Classification in Working Very Minute Veins (Effektivnost' sortirovki pri razrabotke ves'ma tonkikh zhil)

PERIODICAL: Kolyma, 1957, Nr 3, pp 40-44

ABSTRACT: Investigations into ore classification have established the following principles. The metal content in the ore mass varies with ore size. Fines are usually richest. The richer the mass of ore subjected to classification, the higher the metal content of the sized rock. The 25 to 100 mm classes contain about 2.5 times more WO_3 than those over 100 mm in size. The variation in WO_3 content of sized rock is in linear ratio to the WO_3 content of the ore: $y = 0.0346 + 0.054x$, where x is the percent composition of WO_3 in the ore. Calculations of the coefficient of recovery on classification in relation to the metal content of the ore or the working out of an 0.1 m vein by a stope 0.6 m wide are made, and comparison of the effectiveness of surface and underground sizing. The investigations establish the following. In the working

Card 1/2

APPROVED FOR RELEASE: 06/23/11: CIA-RDP86-00513R001031500012-6

APPROVED FOR RELEASE: 06/23/11: CIA-RDP86-00513R001031500012-6

MAKHIN, P.A.

MAKHIN, P.A., professor, doktor tekhnicheskikh nauk.

Twin bore-hole extraction of very narrow veins. Trudy MPI 33:272-278 '56. (MLRA 10:9)

(Mining engineering)

APPROVED FOR RELEASE: 06/23/11: CIA-RDP86-00513R001031500012-6

APPROVED FOR RELEASE: 06/23/11: CIA-RDP86-00513R001031500012-6

MAKHIN, [redacted]P.A., professor, doktor tekhnicheskikh nauk; KARCHEVSKIY, V.K., [redacted]gornyy inzhener.

[redacted]fficiency of explosion energy in relation to the angle of [redacted]pening of the blast crater. Nauch. trudy NPI 32:19-23 '55. (MLRA 10:2)

(Blasting)

APPROVED FOR RELEASE: 06/23/11: CIA-RDP86-00513R001031500012-6

APPROVED FOR RELEASE: 06/23/11: CIA-RDP86-00513R001031500012-6

MAKHIN, P.A., professor, doktor tekhnicheskikh nauk.

Determining the optimum and minimum angles for blasting hole openings. Nauch. trudy NPI 26:10-16 '55. (MLRA 9:12)
(Blasting)

APPROVED FOR RELEASE: 06/23/11: CIA-RDP86-00513R001031500012-6

APPROVED FOR RELEASE: 06/23/11: CIA-RDP86-00513R001031500012-6

MAKHIN, P. A.

Makhin, P. A. "Determining the effectiveness of seperate extraction during mining of small capacity lodes of rare and precious metal deposits," Trudy Novocherkas. politekhn. in-ta im. Ordzhonikidze, Vol. XVII, 1948, p. 95-108-- Bibliog: 10 items

SO: U- 3264, 10 April 1953, (Letopis 'Zhurnal 'nykh Statey, No.3, 1949)

APPROVED FOR RELEASE: 06/23/11: CIA-RDP86-00513R001031500012-6

APPROVED FOR RELEASE: 06/23/11: CIA-RDP86-00513R001031500012-6

MAMIN, P.; DISPOTOLI, L.

"The Technical-Economical Determination on Some Elements of Separate Excavation" Ore Mining, Tsvet. Met., 14, No. 4-5, 1937.

Report U-1506, 4 Oct. 1951.

APPROVED FOR RELEASE: 06/23/11: CIA-RDP86-00513R001031500012-6

APPROVED FOR RELEASE: 06/23/11: CIA-RDP86-00513R001031500012-6

MAKHIN, P. A., DESPOTULI, L. V.

"An Experiment in the Use of Overhand Stoping With Packing of Worked Areas at the Chikoy Molybdenum Deposit", Tsvet. Met. 14, No. 2, Feb. 1939.

Report U-1506, 4 Oct. 1939

APPROVED FOR RELEASE: 06/23/11: CIA-RDP86-00513R001031500012-6

APPROVED FOR RELEASE: 06/23/11: CIA-RDP86-00513R001031500012-6

CA

The second experimental subterranean gasification of coal in Leninsk P. Makhin and P. Botin. *Ugol Vostoka (Eastern Coal)* 5, No. 11/12, 43-8(1935). A detailed description of the operation of the subterranean gasification of unmined coal is presented. The compn. of gases, which changed with the process conditions, is tabulated. There was produced 2,000,000 cu. m. gas in 1.5 months; its heating value fluctuated between 900 and 1100 cal.

A. A. Boehtlingk

ASM-SLA METALLURGICAL LITERATURE CLASSIFICATION

APPROVED FOR RELEASE: 06/23/11: CIA-RDP86-00513R001031500012-6

APPROVED FOR RELEASE: 06/23/11: CIA-RDP86-00513R001031500012-6

L 23963-66

ACC NR: AP6010854

tic cones and that the accuracy obtained in satisfying the boundary conditions on the body substantially decreases. Thus, the computations of flows past circular and elliptic cones by the same procedure and using the simplest integration method made it possible to satisfy boundary conditions on circular cones correct to $\Delta v_n = 0.001$ and on elliptic cones correct to only $\Delta v_n = 0.01$. This is explained by more complex boundary conditions on an elliptic cone. Orig. art. has: 4 figures and 2 formulas. [AB]

SUB CODE: 20/ SUBM DATE: 17Mar65/ ORIG REF: 002/ OTH REF: 001/ ATD PRESS

Card 2/2

APPROVED FOR RELEASE: 06/23/11: CIA-RDP86-00513R001031500012-6

APPROVED FOR RELEASE: 06/23/11: CIA-RDP86-00513R001031500012-6

L 23963-66 EWT(d)/EWT(1)/EWP(m)/EWA(d)/EWA(1) IJP(c) WW

ACC NR: AP6010854 SOURCE CODE: UR/0421/66/000/001/0140/0142

AUTHOR: Makhin, N. A. (Moscow); Syagayev, V. F. (Moscow)

ORG: none

67
B

TITLE: On the numerical solution of supersonic flows past conical bodies at an angle of attack

SOURCE: AN SSSR. Izvestiya. Mekhanika zhidkosti i gaza, no. 1, 1966, 140-142

TOPIC TAGS: supersonic aerodynamics, conic flow, shock wave, entropy, hypersonic flow, supersonic flow, conic body

ABSTRACT: This paper deals with a numerical method for solving the problem of supersonic flows past conical bodies developed by one of the authors (Zhurnal Vychislitel'noy matematiki i matematicheskoy fiziki, v. 3, no. 3, 1963) and contains some suggestions for extending the method by selecting new coordinates ξ and ϕ and considering the density and pressure as unknown variables instead of the entropy function s. A system of equations describing conical flows of a homogeneous, non-heat-conducting gas in ϕ and ξ variables is integrated numerically from the shock wave to the body surface under certain boundary conditions. The results of computations of the flow past an elliptic cone at $M_\infty = 6$ are presented in graphs, such as variation of the: 1) entropy function, and 2) the velocity component normal to the meridional plane ϕ = constant. The results show that certain difficulties arise in the case of ellip-

Card 1/2

APPROVED FOR RELEASE: 06/23/11: CIA-RDP86-00513R001031500012-6

APPROVED FOR RELEASE: 06/23/11: CIA-RDP86-00513R001031500012-6

MAKHIN, G.V.

Pre-Cambrian granitoid intrusion in eastern Tuva. Trudy VAGT no.2:94-95 '56. (MLRA 10:5)
(Tuva Autonomous Province--Rocks, Igneous)
(Tuva Autonomous Province--Geology, Stratigraphic)

APPROVED FOR RELEASE: 06/23/11: CIA-RDP86-00513R001031500012-6

APPROVED FOR RELEASE: 06/23/11: CIA-RDP86-00513R001031500012-6

On the Precambrian Stratigraphy of Eastern Tuva 15-1957-7-8937

lower two groups to belong to the Proterozoic and the upper group to the Cambrian or the Eocambrian.

Card 2/2

M. S. Markov

APPROVED FOR RELEASE: 06/23/11: CIA-RDP86-00513R001031500012-6

APPROVED FOR RELEASE: 06/23/11: CIA-RDP86-00513R001031500012-6

MAKHIN, G. V.

Translation from: Referativnyy zhurnal, Geologiya, 1957, Nr 7, p 6 (USSR) 15-1957-7-8937

AUTHOR: Makhin, G. V.

TITLE: On the Precambrian Stratigraphy of Eastern Tuva (K stratigrafii dokembriya Vostochnoy Tuvy)

PERIODICAL: Tr. Vses. aerogeol. tresta, 1956, Nr 2, pp 69-73

ABSTRACT: A study of the Precambrian deposits of the Bilim River basin (Eastern Tuva) permits their subdivision into three groups, separated from each other by breaks and distinguished by distinctive features of regional metamorphism. The lower group consists of marble and gneiss, the middle of amphibolite and mica schist, and the upper of carbonate rocks, quartzite, and green schist. It is noted that on the basis of degree of metamorphism the rocks of the lower group cannot be correlated with the Archean of the Aldan covered platform and the Baykal region. The author considers the

Card 1/2

APPROVED FOR RELEASE: 06/23/11: CIA-RDP86-00513R001031500012-6

APPROVED FOR RELEASE: 06/23/11: CIA-RDP86-00513R001031500012-6

KHLUSOV, Andrey Yefstaf'yevich; MAKHIN, A.A., dots., retsenzent; POLYAKOV, V.I., kand. tekhn. nauk, retsenzent; FADEYEV, I.Ye., inzh., red.; DUBASOV, A.A., red. izd-va; TIKHANOV, A.Ya., tekhn. red.

[Load-lifting and conveying equipment for plants manufacturing construction elements] Gruzopod"emnoe i transportnoe oborudovanie zavodov stroitel'nykh detalei. Moskva, Gos. nauchno-tekhn.izd-vo mashinostroit. lit-ry, 1961. 356 p. (MIRA 15:3)

(Conveying machinery) (Hoisting machinery)

APPROVED FOR RELEASE: 06/23/11: CIA-RDP86-00513R001031500012-6

APPROVED FOR RELEASE: 06/23/11: CIA-RDP86-00513R001031500012-6

KANYUKHA, N., kandidat tekhnicheskikh nauk; MAKHIN, A., inzhener.

Surfacing brick blocks by vibration pressing. Stroi.mat., izdel.i konstr. 2 no.5:7-10 My '56. (MLRA 9:8)
(Building, Brick)

APPROVED FOR RELEASE: 06/23/11: CIA-RDP86-00513R001031500012-6

APPROVED FOR RELEASE: 06/23/11: CIA-RDP86-00513R001031500012-6

MAKHENKO, V.I.

MAKHENKO, V.I.

Calculating the temperature field in the hard facing of circular cylinders with an electric arc. Avtom. svar. 14, no.12:34-39 D '61. (MIRA 14:11)

1. Odesskiy institut inzhenerov morskogo flota.
(Hard facing)
(Heat--Transmission)

APPROVED FOR RELEASE: 06/23/11: CIA-RDP86-00513R001031500012-6

APPROVED FOR RELEASE: 06/23/11: CIA-RDP86-00513R001031500012-6

KOZDOBA, L.A.; MAKHENKO, V.I.

Electric modeling of nonstationary temperature fields with variable sources of heat. Inzh.-fiz. zhur. no.12:24-28 D '61. (MIRA 14:3)

1. Institut inzherenov morskogo flota, g. Odessa.
(Thermodynamics--Electromechanical analogies)

APPROVED FOR RELEASE: 06/23/11: CIA-RDP86-00513R001031500012-6

APPROVED FOR RELEASE: 06/23/11: CIA-RDP86-00513R001031500012-6

L 19045-63

ACCESSION NR: AP3001335

were calculated as functions of the phase velocity. These calculated results do not agree with the experimental data. The experimental data indicate that capture and acceleration occur in a much narrower range of phase velocities. The divergence between experiment and the calculations is ascribed to end effects in the input junction, which is an H sub 10 to E sub 01 transformer similar to the Stanford variant. The effect of putting inserts in the final waveguide cavity at the junction wall was investigated, and an insert that greatly improves the operation was found. The authors do not consider such inserts to be a satisfactory solution, however, owing to their deleterious effect on the electric strength and because of the analytical complications they involve. Orig. art. has: 7 formulas and 3 figures.

ASSOCIATION: Fiziko-tekhnicheskiy institut AN USSR, Khar'kov (Physical-Technical Institute, AN USSR)

SUBMITTED: 21May62 DATE ACQ: 01Jun63 ENCL: 00

SUB CODE: OC NO REF SOV: 001 OTHER: 005

Card 2/2

APPROVED FOR RELEASE: 06/23/11: CIA-RDP86-00513R001031500012-6

APPROVED FOR RELEASE: 06/23/11: CIA-RDP86-00513R001031500012-6

L 13045-63 EWT(1)/EDS/EEC(b)-2 AFFTC/ASD/ESD-3 IJP(C)
ACCESSION NR: AP3001335 S/0057/63/033/006/0735/0738

AUTHOR: Ostrovskiy, Ye. K.; Zy*kov, A. I.; Kononenko, S. G.; Makhenko, L. A.; Dem'yanenko, G. K.; Manovets, Yu. A.; Rubtsov, K. S. 63

TITLE: Investigation of a shaping section with constant phase velocity for wave propagation 62

SOURCE: Zhurnal tekhnicheskoy fiziki, v. 33, no. 6, 1963, 735-738

TOPIC TAGS: electronics, linear accelerators

ABSTRACT: The axial motion of electrons in a loaded waveguide in which the phase velocity for wave propagation is constant along its length was calculated by the method of J. Swiharta and E. Akeley (J. Appl. Phys., 24, 5, 1953). The waveguide is intended to be the initial section of an electron linear accelerator. The calculations were performed for a section 83 cm long excited to an electric field strength of 67.5 kV/cm and with the electrons injected at an energy of 80 keV. The results are displayed as a family of curves giving the exit electron energy as a function of the entrance phase for different values of the phase velocity from 0.91c to 0.99c. From these results, and taking into account the resolving power of a specific magnetic analyser, the average energy of the electrons at maximum current in the bunch and the current at maximum density

Card 1/2

APPROVED FOR RELEASE: 06/23/11: CIA-RDP86-00513R001031500012-6

APPROVED FOR RELEASE: 06/23/11: CIA-RDP86-00513R001031500012-6

using blasting techniques ...
tekh.-ekon.inform. no.2:88-93 '60. (MIRA 13:6)
(Sheet-metal work)

L 33045-63 EWT(1)/EDS/EEC(b)-2 AFFTC/ASD/ESD-3 IJP(C)
ACCESSION NR: AP3001335 S/0057/63/033/006/0735/0738

APPROVED FOR RELEASE: 06/23/11: CIA-RDP86-00513R001031500012-6

APPROVED FOR RELEASE: 06/23/11: CIA-RDP86-00513R001031500012-6

KHODURA, B.; LANDSPERSKIY, G.; MAKHAZHNV, V.; MALY, Ya.

Preparation and structure study of U_3O_8 crystals. Atom. energ. 5 no.2:181-183 Ag '58. (MIRA 11:8)

1. Institut yadernoy fiziki ChSAN, Praga.
(Uranium oxides) (Crystal lattices)

APPROVED FOR RELEASE: 06/23/11: CIA-RDP86-00513R001031500012-6

APPROVED FOR RELEASE: 06/23/11: CIA-RDP86-00513R001031500012-6

MICHURIN, L.N.; MAKHAYEVA, L.V.

Feeding habits of wild reindeer on the Taymyr Peninsula. Zool. Zhur. 41 no.12:1883-1888 D '62. (MIRA 16:3)

1. Research Institute of Agriculture of the Far North, Norilsk.
(Taymyr Peninsula--Reindeer--Feeding and feeds)

APPROVED FOR RELEASE: 06/23/11: CIA-RDP86-00513R001031500012-6

APPROVED FOR RELEASE: 06/23/11: CIA-RDP86-00513R001031500012-6

MAKHAYEVA, L.V.

Use of winter pastures in reindeer farming in Murmansk Province. Probl.Sev. no.3:66-77 '59. (MIRA 13:4)

1. Nauchno-issledovatel'skiy institut sel'skogo khozyaystva Kraynego Severa.
(Murmansk Province--Reindeer--Feeding and feeds)
(Lichens)

APPROVED FOR RELEASE: 06/23/11: CIA-RDP86-00513R001031500012-6

APPROVED FOR RELEASE: 06/23/11: CIA-RDP86-00513R001031500012-6

MAKHAYEVA, L.

Change the rules for the voluntary insurance of citizens' property. (MIRA 14:5)
Fin.SSSR 22 no.5:66-69 My '61.
(Insurance, Property)

APPROVED FOR RELEASE: 06/23/11: CIA-RDP86-00513R001031500012-6

APPROVED FOR RELEASE: 06/23/11: CIA-RDP86-00513R001031500012-6

MAKHAYEVA, L.

Fire insurance. Pozh. delo 7 no. 2:14 F '61. (MIRA 14:2)
(Insurance, Fire)

APPROVED FOR RELEASE: 06/23/11: CIA-RDP86-00513R001031500012-6

APPROVED FOR RELEASE: 06/23/11: CIA-RDP86-00513R001031500012-6

MAKHAYEV, Ye. A., Cand Agr Sci -- (diss) "Raising of piglets on special combined feeds in various periods of weaning from sows." Moscow, 1960. 19 pp; (All-Union Order of Lenin Agricultural Sciences Academy im V. I. Lenin, All-Union Scientific Research Inst of Animal Husbandry, Division of the Feeding of Agricultural Animals); 180 copies; price not given; (KL, 27-60, 157)

APPROVED FOR RELEASE: 06/23/11: CIA-RDP86-00513R001031500012-6

APPROVED FOR RELEASE: 06/23/11: CIA-RDP86-00513R001031500012-6

KULIKOV, N.N.; MAKHAYEV, N.Ye.

Ionospheric observations during the solar eclipse of Feb. 15, 1961. Geomag. i aer. 1 no.3:441-443 My-Je '61. (MIRA 14:9)

1. Institut geofiziki, Ural'skiy filial AN SSSR.
(Ionosphere) (Eclipses, Solar--1961)

APPROVED FOR RELEASE: 06/23/11: CIA-RDP86-00513R001031500012-6

APPROVED FOR RELEASE: 06/23/11: CIA-RDP86-00513R001031500012-6

DZHABIROV, Sharif; MAKHATOV, Amir; PONOMARENKO, A.A., red.; KUCHINSKIY, V., red.; POLTORAK, I., tekhn.red.

[Topping cotton plants] O chekanke khlopchatnika. Stalinabad, Tadzhikskoe gos. izd-vo, 1958. 4 p. (MIRA 12:1)
(Cotton growing)

APPROVED FOR RELEASE: 06/23/11: CIA-RDP86-00513R001031500012-6

APPROVED FOR RELEASE: 06/23/11: CIA-RDP86-00513R001031500012-6

GUREVICH, M.A., kand.med.nauk; MAKHATAYEV, N.V.

Intravital diagnosis of a rupture of dissecting aneurysm of the thoracic aorta. Sov. med. 28 no.3:94-96 Mr '65. (MIRA 18:10)

1. Pervaya terapevticheskaya klinika (zav. - prof. M.G.Malkina) Moskovskogo oblastnogo nauchno-issledovatel'skogo klinicheskogo instituta imeni M.F.Vladimirskogo (direktor - kand.med.nauk P.M. Leonenko) i Lukhovitskaya gorodskaya bol'nitsa.

APPROVED FOR RELEASE: 06/23/11: CIA-RDP86-00513R001031500012-6

APPROVED FOR RELEASE: 06/23/11: CIA-RDP86-00513R001031500012-6

MAKHATADZE, Ye. (Gruzinskaya SSR)

Chief technologist of the land. Zemledelie 27 no.5:36-39 My '65.
(MIRA 18:6)

APPROVED FOR RELEASE: 06/23/11: CIA-RDP86-00513R001031500012-6

APPROVED FOR RELEASE: 06/23/11: CIA-RDP86-00513R001031500012-6

MAKHATADZE, V.D.

Effect of Borzhomi mineral water on the motor function of the gallbladder. Soob. AN Gruz. SSR 28 no.4:489-496 Ap '62. (MIRA 18:1)

1. Sanatoriy "Likani", Borzhomi. Submitted January 15, 1961.

APPROVED FOR RELEASE: 06/23/11: CIA-RDP86-00513R001031500012-6

APPROVED FOR RELEASE: 06/23/11: CIA-RDP86-00513R001031500012-6

MAKHATADZE, V.D.

Effect of some food products on the motor function of gallbladder. Soob. AN Gruz. SSR 31 no. 2:463-470 Ag '63. (MIRA 17:7)

1. Sanatoriy "Likani", Borzhomi. Predstavleno chlenom-korrespondentom AN GruzSSR A.N.Bakuradze.

APPROVED FOR RELEASE: 06/23/11: CIA-RDP86-00513R001031500012-6

APPROVED FOR RELEASE: 06/23/11: CIA-RDP86-00513R001031500012-6

MAYSURADZE, Z.N.; GABUNIYA, D.S.; LEGRAN, N.E.; MAKADZE, M.M.;
MAKHATADZE, N.K.; SARKISOVA, Ye.G.;
TSIBADZE, D.S.

Microvascular system of the cerebral cortex in dogs. Soob.
AN Gruz. SSR 26 no.4:469-476 Ap '61. (MIRA 14:8)

1. Tbilisskiy gosudarstvennyy meditsinskiy institut.
Predstavleno akademikom A.D. Zurabashvili.
(CEREBRAL CORTEX--BLOOD VESSELS)

APPROVED FOR RELEASE: 06/23/11: CIA-RDP86-00513R001031500012-6

APPROVED FOR RELEASE: 06/23/11: CIA-RDP86-00513R001031500012-6

MAKHATADZE, N.A. (Tbilisi); PARTISPANYAN, A.R., (Tbilisi)

Fall of unstable rocks. Put' i put. khoz. 8 no.9:26-27 '64.
(MIRA 17:11)

1. Nachal'nik inzhenerno-geologicheskoy bazy sluzhby puti Zakavkazskoy dorogi (for Makhatadze). 2. Starshiy geolog inzhenerno-geologicheskoy bazy sluzhby puti Zakavkazskoy dorogi (for Partispanyan).

APPROVED FOR RELEASE: 06/23/11: CIA-RDP86-00513R001031500012-6

APPROVED FOR RELEASE: 06/23/11: CIA-RDP86-00513R001031500012-6

MAKHATADZE, N.A.

Geological inspection of the roadbed. Put' i put. khoz. no.5:14-16 My '58. (MIRA 13:3)

1. Nachal'nik inzhenernogeologicheskoy bazy, g.Tbilisi.
(Railroads--Maintenance and repair)

APPROVED FOR RELEASE: 06/23/11: CIA-RDP86-00513R001031500012-6

APPROVED FOR RELEASE: 06/23/11: CIA-RDP86-00513R001031500012-6

MAKHATADZE, M.A.; ALADASHVILI, G.A.

Titanium cutting in conditions of cooling with use of CO_2.
Trudy Inst.met. AN Gruz. SSR 12:173-186 '62. (MIRA 15:12)
(Metal cutting) (Titanium)

APPROVED FOR RELEASE: 06/23/11: CIA-RDP86-00513R001031500012-6

APPROVED FOR RELEASE: 06/23/11: CIA-RDP86-00513R001031500012-6

SOV/136-59-2-17/24

Machining Titanium with the Use of CO_2 and the Utilisation of Titanium Chips in Metallurgy

degree of reflection: in Fig 2 the latter is related to machining factors with CO_2 cooling (curve "CO_2") and without cooling and in Fig 3 to the temperature. The work showed that without cooling machining factors influence oxidation through their effect on temperature: cutting speed increases lead to increased oxidation, the pitch and depth of cut having the opposite effect. Oxidation of chips occurred at temperatures of over 400°C, i.e. under all machining conditions without cooling. With cooling by CO_2 under all machining conditions unoxidised chips were obtained which could be melted to give sound titanium. There are 4 figures and 6 Soviet references.

ASSOCIATION: Institut Metallurgii AN Gruz SSR (Institute of Metallurgy, AS Gruz SSR)

Card 2/2

APPROVED FOR RELEASE: 06/23/11: CIA-RDP86-00513R001031500012-6

APPROVED FOR RELEASE: 06/23/11: CIA-RDP86-00513R001031500012-6

SOV/136-59-2-17/24

AUTHORS: Makhatadze, M.A., Candidate of Technical Sciences and Aladashvili, G.A., Engineer

TITLE: Machining Titanium with the Use of CO_2 and the Utilisation of Titanium Chips in Metallurgy (Obrabotka titana s primeneniyem CO_2 i ispol'zovaniye titanovoy struzhki v metallurgii)

PERIODICAL: Tsvetnyye Metally, 1959, Nr 2, pp 75-78 (USSR)

ABSTRACT: In 1957 an investigation on the machining of type VT-ID titanium with cooling to below zero by CO_2 was carried out by one of the authors (Makhatadze) at the Laboratoriya Obrabotki Metallov (Metals Machining Laboratory) of the Institut Metallurgii AN Gruz SSR (Institute of Metallurgy of the AS Gruz SSR). The work now described had the object of studying the influence of machining factors on the oxidation of the metal. A series of tests was first made to find the influence of temperature on the rate of oxidation of chips by measuring the rate of weight increase. Fig 1 shows weight-increase (%) isotherms as functions of time (minutes) for 600 to 1100°C in air. Qualitative deductions were made from the temper colours and their

Card 1/2

APPROVED FOR RELEASE: 06/23/11: CIA-RDP86-00513R001031500012-6

APPROVED FOR RELEASE: 06/23/11: CIA-RDP86-00513R001031500012-6

MAKHATADZE, M.A.

Investigating surface quality in finish grinding of steels with cooling at sub-zero temperatures. Trudy Inst.met. AN Gruz.SSR 9:191-204 '58. (MIRA 12:8)
(Surfaces (Technology)--Cooling) (Metal finishing)
(Metals at low temperature)

APPROVED FOR RELEASE: 06/23/11: CIA-RDP86-00513R001031500012-6

APPROVED FOR RELEASE: 06/23/11: CIA-RDP86-00513R001031500012-6

MAKHATADZE, M.A., kandidat tekhnicheskikh nauk.

Study of steel cutting under cooling conditions below zero. Vest. mash. 35 no.12:37 '55. (MLRA 9:5)

(Metal cutting)

APPROVED FOR RELEASE: 06/23/11: CIA-RDP86-00513R001031500012-6

APPROVED FOR RELEASE: 06/23/11: CIA-RDP86-00513R001031500012-6

MAKHATADZE, M.A.

Metal cutting at low temperatures. Stan. i instr. 26 no.11:28-30 N '55. (Metal cutting) (MLRA 9:2)

APPROVED FOR RELEASE: 06/23/11: CIA-RDP86-00513R001031500012-6

APPROVED FOR RELEASE: 06/23/11: CIA-RDP86-00513R001031500012-6

MAKHATADZE, M.A.

Effect of cooling by carbon dioxide on cutter wear during the flow of certain steels with low machnability. Trudy Inst. met. AN Gruz. SSR 10:205-218 '60. (MIRA 13:12)
(Metal-cutting tools--Cooling) (Mechanical wear)

APPROVED FOR RELEASE: 06/23/11: CIA-RDP86-00513R001031500012-6

APPROVED FOR RELEASE: 06/23/11: CIA-RDP86-00513R001031500012-6

1ST AND 2ND ORDERS

PROCESSES AND PROPERTIES INDEX

3RD AND 4TH ORDERS

G

4

158-G. **Rapid Cutting of "30KhGSA" Steel.** (In Russian.) M. A. Makhatadze. *Stanki i Instrument* (Machine Tools and Equipment), v. 21, Feb. 1950, p. 14-15.

Investigation revealed that the above alloy steel (composition not given) is amenable to high-speed cutting (470 meters per min. or more). Influence of cutting speed, of rake angle, and of depth of cut; optimum cutting conditions. (G17, AY)

COMMON ELEMENTS

MATERIALS INDEX

ASM-SLA METALLURGICAL LITERATURE CLASSIFICATION

APPROVED FOR RELEASE: 06/23/11: CIA-RDP86-00513R001031500012-6

APPROVED FOR RELEASE: 06/23/11: CIA-RDP86-00513R001031500012-6

MAKHATADZE, L.N.

Damage to buildings during the Achigvari earthquake of July 5, 1958. Trudy Inst. stroi. mekh. i seism. AN Gruz. 10:77-82 '64. (MIRA 18:11)

APPROVED FOR RELEASE: 06/23/11: CIA-RDP86-00513R001031500012-6

APPROVED FOR RELEASE: 06/23/11: CIA-RDP86-00513R001031500012-6

MAKHATADZE, L.N.

Investigating the strength of the brick masonry of buildings damaged by earthquakes. Trudy Inst. stroi.mekh. i seism. AN Gruz. SSR 9:209-211 '63. (MIRA 17:12)

APPROVED FOR RELEASE: 06/23/11: CIA-RDP86-00513R001031500012-6

APPROVED FOR RELEASE: 06/23/11: CIA-RDP86-00513R001031500012-6

LORDKIPANIDZE, R.S.; MAKHATADZE, L.N.

Earthquake resistance of rural buildings. Trudy Inst.stroi. dela AN Gruz.SSR. 7:123-142 '59. (MIRA 13:5)
(Gerogia--Earthquakes and building)

APPROVED FOR RELEASE: 06/23/11: CIA-RDP86-00513R001031500012-6