APPROVED FOR RELEASE: 06/23/11: CIA-RDP86-00513R001031700034-6

S/571/60/000/006/004/011
E193/E383

Concerning the problem ....

Fig. 3:

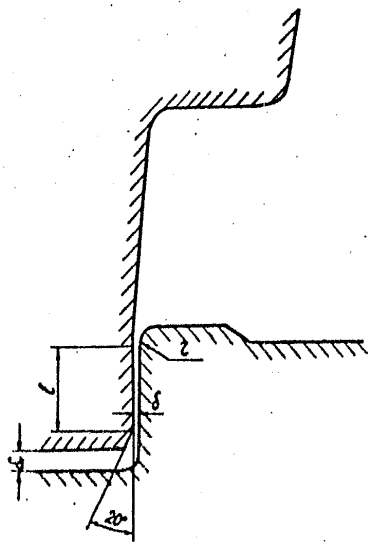

Card 8/8

APPROVED FOR RELEASE: 06/23/11: CIA-RDP86-00513R001031700034-6

APPROVED FOR RELEASE: 06/23/11: CIA-RDP86-00513R001031700034-6

S/571/60/000/006/004/011
E193/E383

Concerning the problem ....

Fig. 1:

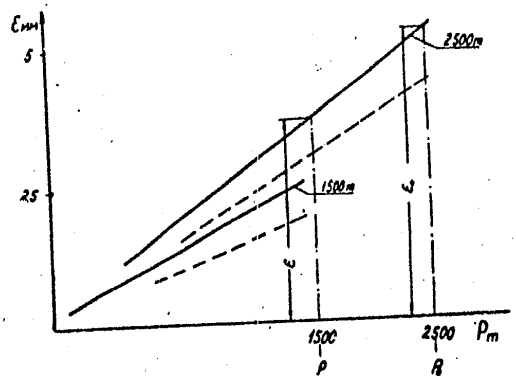

Fig. 2:

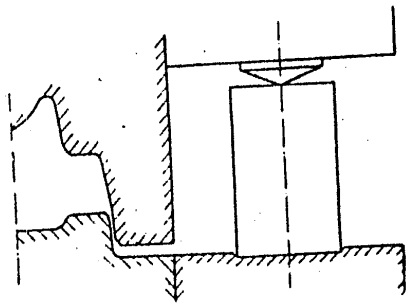

Card 7/8

APPROVED FOR RELEASE: 06/23/11: CIA-RDP86-00513R001031700034-6

APPROVED FOR RELEASE: 06/23/11: CIA-RDP86-00513R001031700034-6

S/571/60/000/006/004/011
E193/E383

Concerning the problem ....

where ℓ_T is the ejector stroke,
V the volume of the forging,
D its maximum diameter and
H_o its thickness at the circumference.

The optimum lock clearance, δ, is between 0.1 and 0.2 mm. To avoid the risk of misalignment, the edge of the cylindrical portion of the top die is bevelled at 20° and the edge of the bottom die is given a radius of 1 mm. A gap δ_1 = 3 - 5 mm is provided between the horizontal faces of the top and bottom dies to allow for an extra compression when the die is slightly under-filled or to accommodate crushers used to control the forging force in presses not equipped with a dynamometer. There are 4 figures.

Card 6/8

APPROVED FOR RELEASE: 06/23/11: CIA-RDP86-00513R001031700034-6

APPROVED FOR RELEASE: 06/23/11: CIA-RDP86-00513R001031700034-6

Concerning the problem ....

Associated with over-filling is the problem of finning. Limitations imposed by the design of the die assembly and stroke of the ejector make it impossible to solve this problem by increasing the length of the lock. The tendency to finning, however, can be reduced or even eliminated by improved lock design, such as is shown in Fig. 3, in which the locking part of the top die and the corresponding part of the bottom die are both cylindrical. This design feature, permissible owing to the presence of an ejector, results in a constant lock clearance and prevents compression of the fin (when it is formed), which is unavoidable when a conical lock is employed. The approximate length, ℓ, of the cylindrical portion of the lock which will secure timely closure of the die in forging of gear blanks with a relatively low rim and hub can be found from:

$$\ell_T > \ell > \frac{4V}{\pi D^2} - H_o \qquad (7)$$

APPROVED FOR RELEASE: 06/23/11: CIA-RDP86-00513R001031700034-6

APPROVED FOR RELEASE: 06/23/11: CIA-RDP86-00513R001031700034-6

S/571/60/000/006/004/011
E193/E383

Concerning the problem ....

where Δh and Δd are the specified dimensional tolerances of the length (h) and diameter (d) of the slug. If the condition $\Delta V \geqslant \Delta v$ is fulfilled, closed-die forging can be performed without the provision of a compensating hollow in the die. In this connection, a rapid method of gauging the slug length is required and Fig. 2 shows schematically a closed-die with a device suitable for this purpose. As one forging is being produced, a conical indenter, set at a predetermined position, approaches the flat end of a conveniently-placed slug. At the end of the stroke the indenter enters the metal and, since the dimension of the resultant impression is ten times greater than its depth, excessively long slugs can be easily identified by visual examination. If ΔV is smaller than Δv, a compensating hollow has to be provided in the die. Its volume is given by:

$$V_{Komp} \geqslant \Delta v - \Delta V \qquad (5).$$

Card 4/8

APPROVED FOR RELEASE: 06/23/11: CIA-RDP86-00513R001031700034-6

APPROVED FOR RELEASE: 06/23/11: CIA-RDP86-00513R001031700034-6

Concerning the problem ....

$$\Delta V = \varepsilon_o \left(1 - \frac{P}{P_o}\right) \frac{\pi D^2}{4} + \pi D \sqrt{hH} (\Delta D) \qquad (3),$$

where ε_o is the elastic strain of the press under a load,

P_o is equal to the nominal rating of the press,

D and H denote the maximum diameter and thickness of the forging,

d and h are the diameter and the height of the slug and

ΔD is the elastic strain of the die diameter.

In practice, ΔV can amount to more than 5% of the nominal volume of the die impression. At the same time, the volume of slugs can also vary due to unavoidable variation in their length and diameter. This variation, Δv, can be calculated from:

$$\Delta v = \frac{\pi d^2}{4}(\Delta h) + \pi dh(\Delta d) \qquad (4),$$

APPROVED FOR RELEASE: 06/23/11: CIA-RDP86-00513R001031700034-6

APPROVED FOR RELEASE: 06/23/11: CIA-RDP86-00513R001031700034-6

Concerning the problem ....

present authors. It was found that under the nominal load the height of the die impression in 1500 - 2 500-ton presses increased by 2.5 and 5.0 mm, respectively. In addition to elastic deformation in the vertical direction, the die deformed elastically in the horizontal direction due to pressure exerted on its walls by compressed metal, the resultant increase in the diameter of the die amounting to 0.5 mm. It is precisely because of this increase in the volume of the die impression that some variation (unavoidable in practice) in the volume of slugs is permissible, which makes closed-die forging a practical proposition. When the actual forging force, P, is lower than the nominal rating of the press, P_0, there is a certain reserve of elastic strain equal to $\varepsilon_0 - \varepsilon$ (see Fig.1), which permits accommodating a certain excessive volume of the slug. If the radial strain is also taken into account, the increase in the volume of the die impression, ΔV, can be calculated from:

APPROVED FOR RELEASE: 06/23/11: CIA-RDP86-00513R001031700034-6

APPROVED FOR RELEASE: 06/23/11: CIA-RDP86-00513R001031700034-6

S/571/60/000/006/004/011
E193/E383

AUTHORS: Severdenko, V.P., Gavrilov, M.Ye., Makushok, Ye.M. and Segodnik, A.F.

TITLE: Concerning the problem of closed-die stamping on crank presses for hot forging

SOURCE: Akademiya navuk Belaruskay SSR. Fiziko-tekhnicheskiy institut. Sbornik nauchnykh trudov. no. 6. Minsk, 1960, 58 - 65

TEXT: The object of the present investigation was to study elastic deformation of the press/die system during closed-die forging on 1 500 - 2 500 tons crank presses in order to establish the conditions under which both over-filling and finning could be avoided. In spite of the high rigidity of crank presses, they undergo a certain degree of elastic deformation during a forging operation. This is illustrated in Fig. 1, where the elastic strain (ε, mm) in 1 500- and 2 500-ton presses is plotted against the applied load (P, tons), the broken lines representing data supplied by the makers, the continuous lines representing the characteristics of the press/die system determined by the

Card 1/8

APPROVED FOR RELEASE: 06/23/11: CIA-RDP86-00513R001031700034-6

APPROVED FOR RELEASE: 06/23/11: CIA-RDP86-00513R001031700034-6

Study of deformation of S/571/60/000/006/003/011
E193/E383

Fig. 10:

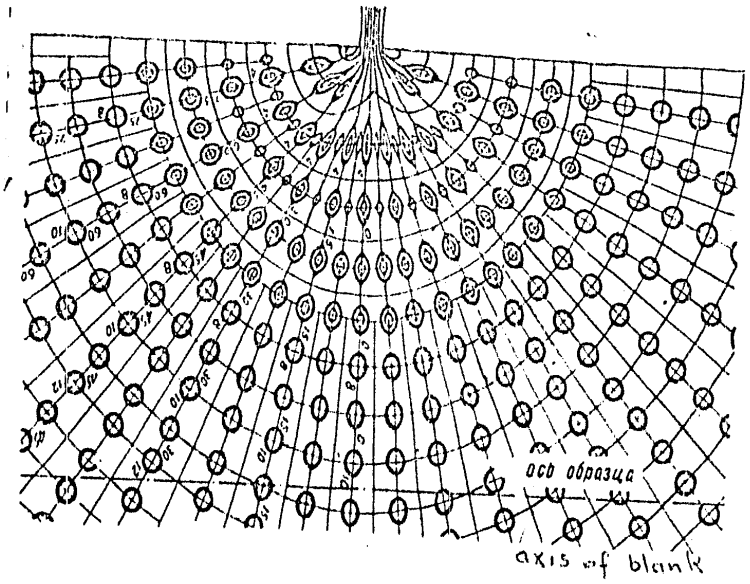

Card 3/8

APPROVED FOR RELEASE: 06/23/11: CIA-RDP86-00513R001031700034-6

APPROVED FOR RELEASE: 06/23/11: CIA-RDP86-00513R001031700034-6

S/571/60/000/006/003/011
E193/E383

Study of deformation of ....

Fig. 5:

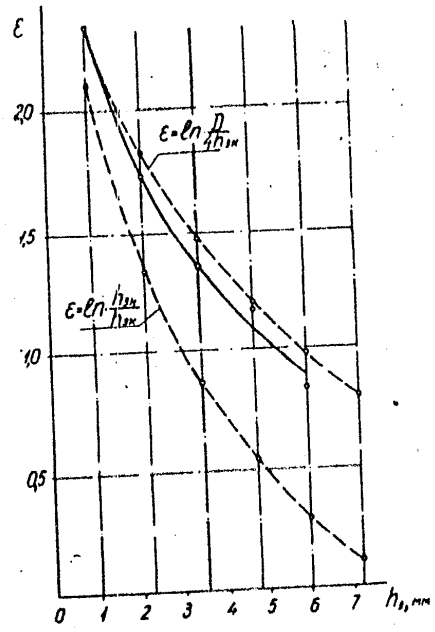

Fig. 9:

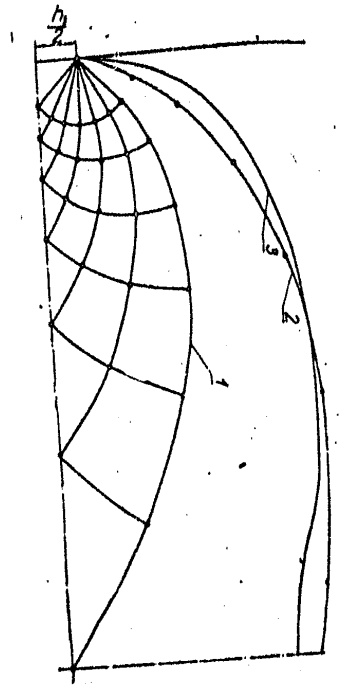

Card 7/8

APPROVED FOR RELEASE: 06/23/11: CIA-RDP86-00513R001031700034-6

APPROVED FOR RELEASE: 06/23/11: CIA-RDP86-00513R001031700034-6

S/571/60/000/006/003/011
E193/E383

Study of deformation of ....

Fig. 1:

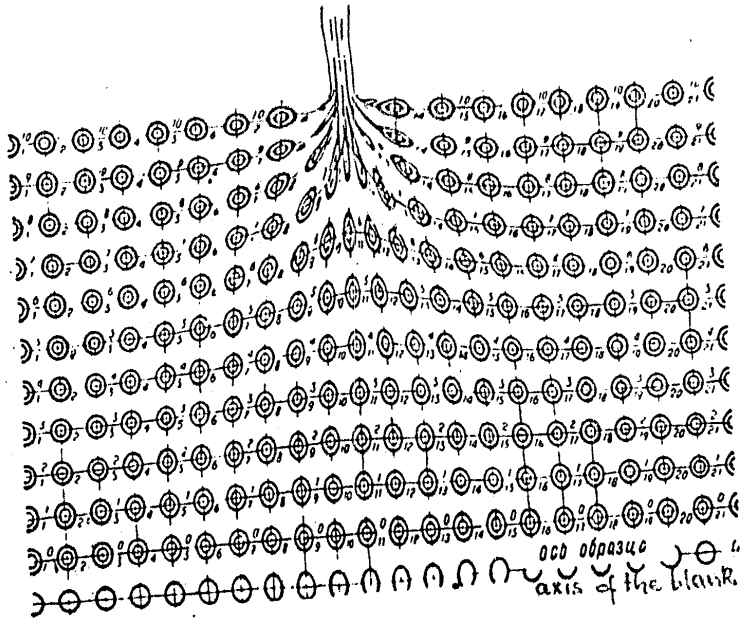

Card 6/8

APPROVED FOR RELEASE: 06/23/11: CIA-RDP86-00513R001031700034-6

APPROVED FOR RELEASE: 06/23/11: CIA-RDP86-00513R001031700034-6

of the slip-lines field (line 2), which is deflected from the theoretical boundary (line 1) by an angle of $\pi/8$.
There are 10 figures and 2 Soviet references.

Fig. 2:

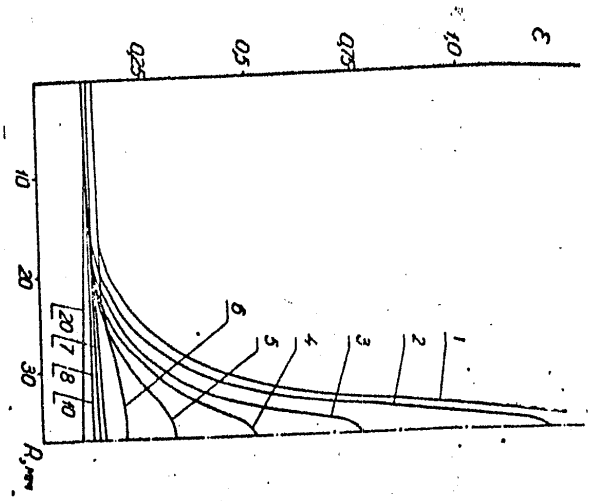

APPROVED FOR RELEASE: 06/23/11: CIA-RDP86-00513R001031700034-6

APPROVED FOR RELEASE: 06/23/11: CIA-RDP86-00513R001031700034-6

to metal flow and deformation due to compression of the layers adjacent to the plane of symmetry of the blank. Consequently, the empirical formula (3) becomes:

$$|\varepsilon|_{max} = \ln \frac{D}{4h_3 K} + 5 \frac{\Delta H}{D} \qquad (4),$$

where ΔH is the decrease in the blank thickness (it should be emphasised here that the volume of metal deformed to such an extent is small, being concentrated only at the mouth of the flash clearance). The extent of the deformation region is illustrated in Fig. 9, showing the slip-lines field in the vertical plane of symmetry of the blank, in the segment bounded by its axis (vertical broken line), horizontal plane of symmetry (axis of abscissae) and the die wall. The real boundary of the deformation region (line 3) is very close to the real boundary

APPROVED FOR RELEASE: 06/23/11: CIA-RDP86-00513R001031700034-6

APPROVED FOR RELEASE: 06/23/11: CIA-RDP86-00513R001031700034-6

of which are reproduced in Fig. 5, where the maximum deformation, ε, in the plane of symmetry of a blank 75 mm in diameter is plotted against the flash thickness (h_3, mm). The experimental results are represented by the continuous curve, the broken curves representing empirical functions:

$$\varepsilon = \ln \frac{h_{3.H}}{h_{3.K}} \qquad (2)$$

and

$$\varepsilon = \ln \frac{D}{4h_{3.K}} \qquad (3)$$

where D is the blank diameter, $h_{3.H}$ and $h_{3.K}$ denoting its initial and final thickness. It will be seen that the latter expression gives results which agree well with experiment. The results of further tests showed that the maximum deformation at the mouth of the flash clearance was a sum of the deformation due

APPROVED FOR RELEASE: 06/23/11: CIA-RDP86-00513R001031700034-6

APPROVED FOR RELEASE: 06/23/11: CIA-RDP86-00513R001031700034-6

S/571/60/000/006/003/011
E193/E383

Study of deformation of ....

inscribed whose shape changed during deformation, the degree of which was calculated from the dimensions of the axes of the resultant ellipses and from the displacement of the centre of each circle relative to a fixed reference line. The results of the first series of experiments in which blanks 75 mm in diameter were compressed in stages, the reduction in thickness attained in each consecutive stage being equal to the pitch, S, of the coordinate net (3.55 mm), are reproduced in Fig. 2, which shows how the deformation, ε, in the plane of symmetry of the flash clearance varied with the distance, R (mm), from the blank axis. The number ascribed to each curve indicates the flash thickness in multiples of S (e.g. Curve 4 represents results obtained for a blank forged to produce a flash 4 x 3.55 = 14.2 mm thick). It will be seen that as the flash thickness diminished, the deformation across the horizontal plane of symmetry of the blank became increasingly nonuniform due to rapid increase in the degree of deformation near the mouth of the flash clearance. Experiments carried out on blanks of different diameters, forged in steps of different magnitudes, yielded similar results, some

Card 2/8

APPROVED FOR RELEASE: 06/23/11: CIA-RDP86-00513R001031700034-6

APPROVED FOR RELEASE: 06/23/11: CIA-RDP86-00513R001031700034-6

S/571/60/000/006/003/011
E193/E383

AUTHORS: Severdenko, V.P. and Makushok, Ye.M.

TITLE: Study of deformation of metal in forging with the formation of a flash

SOURCE: Akademiya navuk Belaruskay SSR. Fiziko-tekhnicheskiy institut. Sbornik nauchnykh trudov. no. 6. Minsk, 1960. 46 - 57

TEXT: Results of an investigation are reported in which the coordinate net technique was used to study the deformation accompanying the formation of a flash during forging of cylindrical lead blanks, 32, 50, 75 and 135 mm in diameter. The blanks were sectioned both horizontally and in the plane corresponding to the plane of symmetry of the flash and lead foil with the coordinate nets inscribed by a photographic process were placed between the component parts of each blank before the experiments. Two types of coordinate network used (orthogonal and radial) are shown in Figures 1 and 10, respectively, the vertical lines on the right-hand side indicating the axes of the blanks. At the intersection of the lines forming the coordinate networks, circles were

Card 1/8

APPROVED FOR RELEASE: 06/23/11: CIA-RDP86-00513R001031700034-6

APPROVED FOR RELEASE: 06/23/11: CIA-RDP86-00513R001031700034-6

SEVERDENKO, V.P.; MAKUSHOK, Ye.M.

Plotting the fields of lines of slide and calculating the coordinates of their nodal points for die-forging processes. Sbor.nauch.trud.Fiz.-tekh.inst.AN BSSR. no.6:34-45 '60. (MIRA 14:6)
(Plasticity)

APPROVED FOR RELEASE: 06/23/11: CIA-RDP86-00513R001031700034-6

APPROVED FOR RELEASE: 06/23/11: CIA-RDP86-00513R001031700034-6

SEVERDENKO, V.P.; MAKUSHOK, Ye.M.

Fields of slip lines in metal forced out into a flange. Dokl. AN BSSR 4 no.1:24-27 Ja '60. (MIRA 13:6)
(Forging)

APPROVED FOR RELEASE: 06/23/11: CIA-RDP86-00513R001031700034-6

APPROVED FOR RELEASE: 06/23/11: CIA-RDP86-00513R001031700034-6

84271

The Calculation of the Coordinates of Nodal Points in Force Fields During Pressing

S/170/60/003/010/017/023X
B019/B054

a graphical representation of the lines of force as open polygons. R. Khill (Ref. 1), L. A. Shofman and P. I. Perlin (Ref. 2) are mentioned. There are 1 figure and 3 Soviet references.

ASSOCIATION: Fiziko-tekhnicheskiy institut AN BSSR, g. Minsk (Institute of Physics and Technology of the AS BSSR, Minsk)

SUBMITTED: June 18, 1960

Card 2/2

APPROVED FOR RELEASE: 06/23/11: CIA-RDP86-00513R001031700034-6

APPROVED FOR RELEASE: 06/23/11: CIA-RDP86-00513R001031700034-6

1.1210 2108 only
18.8200

84272

S/170/60/003/010/017/023X
B019/B054

AUTHORS: Severdenko, V. P., Makushok, Ye. M.

TITLE: The Calculation of the Coordinates of Nodal Points in Force Fields During Pressing

PERIODICAL: Inzhenerno-fizicheskiy zhurnal, 1960, Vol. 3, No. 10, pp. 106-109

TEXT: The authors present a calculation of the mutual position of nodal points and their coordinates in an equiangular force field which is formed in the material under the action of any tool. Fig. 1 shows the equiangular field of the glide lines of the material during pressing with a die of complicated shape; the field is produced by means of chords (Ref. 2). With the aid of this field, the authors find the coordinates of the nodal points and the side lengths of the tetragonal cells of the field. Fig. 1 further shows that the glide lines form triangular cells where they approach the die. The method described for calculating the nodal points in the force field makes it possible to improve the rating of the stress-strain state of the material during pressing by means of

Card 1/2

APPROVED FOR RELEASE: 06/23/11: CIA-RDP86-00513R001031700034-6

APPROVED FOR RELEASE: 06/23/11: CIA-RDP86-00513R001031700034-6

Experimental Determination of the State of Stress by Pressing Metal in a Burr

S/170/60/003/008/011/014
B019/B054

punch depends on the height of the burr slits. A comparison of the results shows that with a considerable height of the burr slits there are differences between the specific pressures on the lateral and end faces. On a reduction of this height, this difference is reduced by an increase in hydrostatic pressure. There are 2 figures and 1 Soviet reference.

ASSOCIATION: Fiziko-tekhnicheskiy institut AN BSSR, g. Minsk (Institute of Physics and Technology of the AS BSSR, Minsk)

SUBMITTED: March 3, 1960

Card 2/2

APPROVED FOR RELEASE: 06/23/11: CIA-RDP86-00513R001031700034-6

APPROVED FOR RELEASE: 06/23/11: CIA-RDP86-00513R001031700034-6

MAKUSHOK, YE. M

S/170/60/003/008/011/014
B019/B054

AUTHORS: Severdenko, V. P., Makushok, Ye. M.

TITLE: Experimental Determination of the State of Stress by Pressing Metal in a Burr

PERIODICAL: Inzhenerno-fizicheskiy zhurnal, 1960, Vol. 3, No. 8, pp. 88 - 91

TEXT: The authors deal with a method of measuring the pressure in the interior of forged pieces; the method had been described before by Makushok (Ref. 1). The pressure curve on the end face of the forged piece is measured by means of a plate which has a number of holes. The pressure on the lateral faces was measured by transmitters which were arranged in spirals with respect to the end face of the punch. The measuring operations are thoroughly described with the aid of the scheme in Fig. 1. Fig. 2 graphically shows the results of an experimental determination of the distribution curve of normal stresses during the pressing of lead. The stress distribution on the end face of the forged piece is similar to that in the plane of the burr whereas the stress on the lateral faces of the

Card 1/2

APPROVED FOR RELEASE: 06/23/11: CIA-RDP86-00513R001031700034-6

APPROVED FOR RELEASE: 06/23/11: CIA-RDP86-00513R001031700034-6

MAKUSHOK, Ya.M., kand.tekhn.nauk

Calculating deformation stresses for open and closed upsetting.
Mash.Bel. no.5:36-43 '58. (MIRA 12:11)
(Forging)

APPROVED FOR RELEASE: 06/23/11: CIA-RDP86-00513R001031700034-6

APPROVED FOR RELEASE: 06/23/11: CIA-RDP86-00513R001031700034-6

MAKUSHOK, Ye. M.

Makushok, Ye. M.

"A study of the process of stamping on presses." Min Higher Education USSR. Belorussian Polytechnic Inst imeni I. V. Stalin. Chair of Pressure Working of Metals. Minsk, 1956. (Dissertation for the Degree of Candidate in Technical Sciences.)

Knizhnaya letopis'
No. 25, 1956. Moscow

APPROVED FOR RELEASE: 06/23/11: CIA-RDP86-00513R001031700034-6

APPROVED FOR RELEASE: 06/23/11: CIA-RDP86-00513R001031700034-6

MAKUSHOK, V.M.

Specific identity of Nematonurus longifilis (Gunther, 1877) and N. clarki (Jordan et Gilbert, 1898) and some notes on age variability in Macruridae (Pisces). Trudy Inst. okean. 73:139-162 '64. (MIRA 17:6)

APPROVED FOR RELEASE: 06/23/11: CIA-RDP86-00513R001031700034-6

APPROVED FOR RELEASE: 06/23/11: CIA-RDP86-00513R001031700034-6

MAKUSHOK, V.M.

Some structural characteristics of the seismosensory system in northern blenniids (Stichaeoidae, Blennioidei, Pisces). Trudy Inst.okean. 43:225-269 '61. (MIRA 14:6)
(Sense organs--Fishes) (Blennies (Fish))

APPROVED FOR RELEASE: 06/23/11: CIA-RDP86-00513R001031700034-6

APPROVED FOR RELEASE: 06/23/11: CIA-RDP86-00513R001031700034-6

MAKUSHOK, V.M.

The group Neozoarcinae (Zoarcidae, Blennioidei, Pisces) and its systematic position. Trudy Inst.okean. 43:198-224 '61. (MIRA 14:6)

(Japan, Sea of--Blennies (Fish))

APPROVED FOR RELEASE: 06/23/11: CIA-RDP86-00513R001031700034-6

APPROVED FOR RELEASE: 06/23/11: CIA-RDP86-00513R001031700034-6

MAKUSHOK, V.M.

Supplementary data on the morphology and systematics of wrymouths (Cryptacanthodidae, Blennioidei. Pisces). Trudy Inst.okean. 43:184-197 '61. (MIRA 14:6)

(Blennies (Fish))

APPROVED FOR RELEASE: 06/23/11: CIA-RDP86-00513R001031700034-6

APPROVED FOR RELEASE: 06/23/11: CIA-RDP86-00513R001031700034-6

NAKUSHOK, V.M., biolog

Biological collections and observations at the Mirnyy Observatory in 1958. Inform.biul. Sov.antark.ekep. no.6:40-42 '59. (MIRA 13:11)

1. Tret'ya kontinental'naya ekspeditsiya.
(Antarctic regions--Biological research)

APPROVED FOR RELEASE: 06/23/11: CIA-RDP86-00513R001031700034-6

APPROVED FOR RELEASE: 06/23/11: CIA-RDP86-00513R001031700034-6

MAKUSHOK, V.M.

Morphological foundation of the systematics of stichaeoid and allied fish families (Stichaeoidae, Blennioidei, Pisces). Trudy zool. inst. 25:3-129 '58. (MIRA 11:8)
(Blennies (Fish))

APPROVED FOR RELEASE: 06/23/11: CIA-RDP86-00513R001031700034-6

APPROVED FOR RELEASE: 06/23/11: CIA-RDP86-00513R001031700034-6

MAKUSHOK,V.M.; ANDRIYASHEV,A.P.

Azygopterus corallinus (Blennioidei, Pisces), a new fish without paired fins. Vop.ikht.no.3:50-53 '55. (MLRA 8:11)

1. Zoologicheskiy institut Akademii nauk SSSR
(Fishes)

APPROVED FOR RELEASE: 06/23/11: CIA-RDP86-00513R001031700034-6

APPROVED FOR RELEASE: 06/23/11: CIA-RDP86-00513R001031700034-6

MAKUSHKINA, L.; MINAYEVA, N.

One hundred and sixty-three days less in one year. Okhr. truda i sots. strakh. 6 no.6:12-14 Je '63. (MIRA 16:8)

APPROVED FOR RELEASE: 06/23/11: CIA-RDP86-00513R001031700034-6

APPROVED FOR RELEASE: 06/23/11: CIA-RDP86-00513R001031700034-6

MAKUSHKIN, Ya.G., inzh. (Sverdlovsk); KUZNETSOV, N.D., insh. (Sverdlovsk); VIKHOREV, Yu.A., inzh. (Sverdlovsk)

Experience in operating the ANRAN-IV analog computer system of the Ural Centralized Power Production, Distribution and Control Administration. Elektricheskiye nc.5:79-81 My '65.

(MIRA 18:6)

APPROVED FOR RELEASE: 06/23/11: CIA-RDP86-00513R001031700034-6

APPROVED FOR RELEASE: 06/23/11: CIA-RDP86-00513R001031700034-6

MAKUSHKIN, Ya.G., inzh.; KUZNETSOV, N.D., inzh.

Load distribution with minimum fuel expenditures. Elek. sta. 34 no.10:61-64 O '63. (MIRA 16:12)

APPROVED FOR RELEASE: 06/23/11: CIA-RDP86-00513R001031700034-6

APPROVED FOR RELEASE: 06/23/11: CIA-RDP86-00513R001031700034-6

MAKUSHKIN, Ya.G., inzh.; LINDKVIST, B.A., inzh.

Reconstruction of a boiler for operation on milled peat. Izv. vys. ucheb.; energ. 4 no.2:119-122 F '61. (MIRA 14:3)

1. Uralenergo.

(Boilers)

APPROVED FOR RELEASE: 06/23/11: CIA-RDP86-00513R001031700034-6

APPROVED FOR RELEASE: 06/23/11: CIA-RDP86-00513R001031700034-6

MAKUSHKIN, Ya.G., inzh.

Present condition and outlook for development of the Ural Integrated Power System during 1959-1965. Elek.sta. 29 no.11:2-7 N '58. (MIRA 11:12)
(Ural Mountain region--Electric power plants)

APPROVED FOR RELEASE: 06/23/11: CIA-RDP86-00513R001031700034-6

APPROVED FOR RELEASE: 06/23/11: CIA-RDP86-00513R001031700034-6

MAKUSHKIN, Ya. G.

BLINOVA, V.N.; DEMIDOV, A.A.; KOLIN, Ya.S.; MAKUSHKIN, Ya.G.; MYZIN, L.M.; PERMYAKOV, N.P.; PONKDILKO, A.I.; BUKOVIK, Z.G.; YEFREMOV, I.A.; KOPAYGORODSKIY, A.B.; MARINOV, A.M.; NEKHOROSHKOVA, O.I.; POKROVSKIY, A.F.; ROMANOVSKIY, A.A.; RASSADNIKOV, Ye.I., red.; SAVEL'YEV, V.I., red.; FRIDKIN, A.M., tekhn.red.

[Electric power in the Urals during the past 40 years] Energetika Urala za 40 let. Moskva, Gos. energ. izd-vo, 1958. 141 p. (MIRA 11:5)

(Ural Mountain region--Electric power)

APPROVED FOR RELEASE: 06/23/11: CIA-RDP86-00513R001031700034-6

APPROVED FOR RELEASE: 06/23/11: CIA-RDP86-00513R001031700034-6

3

REDUCTION OF TEMPERATURE OF BOILER FLUE GASES IN URAL POWER PLANTS. 29

[illegible] (Per Sta., Moscow), May 1957, [illegible] In [illegible] boiler modifications were undertaken in some Ural power plants with a view to reducing the flue gas temperatures, [illegible] rearranging the rear portion of the unit to obtain maximum reduction in flue gas temperature for minimum outlay in metal and material; [illegible] simple and flexible design of the rear section; achieving additional heat removal without increasing the size of the unit; while keeping fuel [illegible] steady or lowering it; accumulating experience for later large [illegible] The experience gained confirmed the assumptions as to the [illegible] of the chemical treatment of small heating surfaces. The use of small heating surfaces (feedwater heater with tubes 25 x 5 and 35 x 2.5 mm diameter and air heater with tubes 40 x 1.5 mm diameter and compact tube heating) [illegible] flue gas temperature to be kept down to [illegible] maximum. C.E.A.

APPROVED FOR RELEASE: 06/23/11: CIA-RDP86-00513R001031700034-6

APPROVED FOR RELEASE: 06/23/11: CIA-RDP86-00513R001031700034-6

MAKUSHKIN, Ya. G.

YERMAKOV, V.S.; KLOCHKOV, I.M.; CHIZHOV, D.G.; KOGTEV, G.I.; LAVRENENKO, K.D.; NEKRASOV, A.M.; SPIRIN, S.A.; VESELOV, N.D.; KOTILEVSKIY, D.G.; SMIRNOV, G.V.; MARINOV, A.M.; MAKSIMOV, A.A.; IVANOV, M.I.; NEMOV, A.P.; CHUPRAKOV, N.M.; AVTONOMOV, B.V.; SYROMYATNIKOV, I.A.; MOLOKANOV, S.I.; FAERMAN, S.TS.; GORSHKOV, A.S.; GOL'DENBERG, P.S.; SOKOLOV, B.M.; MAKUSHKIN, Ya.G.; MKHITARYAN, S.G.; RASSADNIKOV, Ye.I.; GRUDINSKIY, F.G.; FOMICHEV, G.I.; SHCHERBININ, B.V.; ZAYTSEV, V.I.; KOKOREV, S.V.; KLYUSHIN, M.P.; PESCHANSKIY, V.I.; SAFRAZHEKYAN, G.S.; i dr...

IUrii Prokhorovich Komissarov; obituary. Elek.sta. 25 no.5:60 My '54. (Komissarov, IUrii Prokhorovich, 1910-1954) (MLRA 7:6)

APPROVED FOR RELEASE: 06/23/11: CIA-RDP86-00513R001031700034-6

APPROVED FOR RELEASE: 06/23/11: CIA-RDP86-00513R001031700034-6

MAKUSHKIN, YA. G., ed.

Repair of heating equipment at electric stations; from the materials of the conference held by the Molotov All-Union Scientific Society of Power Engineers and Technicians and the Main Ural Power Administration. Moskva, Gos. energ. izd-vo, 1952. 151 p. (54-35113)

TK1285.V8

1. Electric power-plants - Russia

APPROVED FOR RELEASE: 06/23/11: CIA-RDP86-00513R001031700034-6

APPROVED FOR RELEASE: 06/23/11: CIA-RDP86-00513R001031700034-6

1ST AND 2ND ORDERS — PROCESSES AND PROPERTIES INDEX — 3RD AND 4TH ORDERS

V. M.

TWO YEARS' OPERATING EXPERIENCE OF FIRST VTI TWO STAGE FURNACES. Makushkin, Ya, G. and Klaptsov, B. K. (Za Ekon. Topliva (Fuel Econ.), Mar. 1951, 4-9).

This furnace has a grate area of 52 sq. m. and heats a 60/70 tons/hr water tube boiler. It is intended for ungraded coal with a high proportion of fines. Coal slides down a plate at 48 degrees to the horizontal to a pneumatic spreader. From this particles 1 m. m. in diameter and below travel upwards and burn in suspension while the remainder fall on to a chain grate at distances which vary with particle size. A water cooled "squeezing bar" may be set above the grate near its front to prevent the larger pieces from travelling back too quickly. Over part of the grate the fuel is gasified, not burned completely, and the resultant gases are burned with the small particles in secondary air which is introduced at a "Throat" in the furnace space. (L)

ASM-SLA METALLURGICAL LITERATURE CLASSIFICATION

APPROVED FOR RELEASE: 06/23/11: CIA-RDP86-00513R001031700034-6

APPROVED FOR RELEASE: 06/23/11: CIA-RDP86-00513R001031700034-6

18064

MAKUSHKIN, Ya. G.

USSR/Elec Power System 4501.0500 Nov 1947

"Power System of the Urals on the Thirtieth Anniversary of the October Revolution," Ya. G. Makushkin, 1 p

"Elek Stantsii" Vol XVIII, No 11

Gives credit to individual installations of Glavuralenergo for good records in repair and capital installation work. Data on plan fulfillment of named plants. Names outstanding workers. Plants named include: SuGRES, Zakamsk TETs, Yegorshinsk GRES, and Chelyabinsk TETs.

18064

IC

APPROVED FOR RELEASE: 06/23/11: CIA-RDP86-00513R001031700034-6

APPROVED FOR RELEASE: 06/23/11: CIA-RDP86-00513R001031700034-6

SOV/46-5-1-10/24

Spherical Barium Titanate Receivers for Measurements of Pressure of Shock Waves in Air

was tested on shock waves with pressures of 0.025-3.5 kg/cm^2 in the wave-front. Figs 5 and 6 show shock-wave profiles obtained with the receiver described when the wave-front pressures were 0.025 and 1.25 kg/cm^2. The advantage of the receiver, compared with receivers with rigid holders is that the recorded shock-wave profile is not disturbed by vibrations of the holder. Small errors are introduced due to rarefaction in the shadow cast by the spherical receiver (Fig 7) and due to a slight dependence of the recorded pressure on the angle between the axis of the receiver and the wave-front normal (Fig 8). There are 8 figures and 5 Soviet references.

SUBMITTED: December 27, 1957

Card 2/2

APPROVED FOR RELEASE: 06/23/11: CIA-RDP86-00513R001031700034-6

APPROVED FOR RELEASE: 06/23/11: CIA-RDP86-00513R001031700034-6

SOV/46-5-1-10/24

AUTHORS: Makushkin, V.P. and Mishuyev, A.V. (Leningrad)

TITLE: Spherical Barium Titanate Receivers for Measurements of Pressure of Shock Waves in Air (Sfericheskiye titanatbariyevyye priyemniki davleniya vozdushnykh udarnykh voln)

PERIODICAL: Akusticheskiy Zhurnal, 1959, Vol 5, Nr 1, pp 64-69 (USSR)

ABSTRACT: The authors describe a non-directional piezoelectric receiver for use in studies of shock waves in air. The receiver is a spherical shell of barium titanate (detail 1 in Fig 4). Its holder consists of two conical tubes made of rubber and cork (details 3 and 4 respectively). The cork section is attached to a metal tube 5. The holder is sealed against moisture by a layer of graphite. The spherical shell of the receiver is covered by a layer of BF-6 glue (8) to protect it from heating by the shock waves. Connections to the electrodes (2) are made via an inner conductor 6 (a sewing needle) and an outer conductor 7 (a metal spiral). The dimensions of the barium titanate shell were: external diameter 3.8 mm, internal diameter 2.8 mm; its capacitance was 650 pF. The sensitivity of the receiver was 0.545 volts per kg/cm^2. It

Card 1/2

APPROVED FOR RELEASE: 06/23/11: CIA-RDP86-00513R001031700034-6

APPROVED FOR RELEASE: 06/23/11: CIA-RDP86-00513R001031700034-6

MAKUSHKIN, P.N., kand.med.nauk (Moskva, ul. 3-ya Kozhukhovskaya, d.87, kv.84)

Changes in the level of blood sugar during operations with potentialized anesthesia. Klin.khir. no.6:42-47 Je '62. (MIRA 16:5)

1. Kafedra obshchey khirurgii (zav. - zasluzhennyy deyatel' nauki prof. G.P. Zaytsev) Pediatricheskogo fakul'teta II Moskovskogo meditsinskogo instituta.
(BLOOD SUGAR) (ANESTHESIA)

APPROVED FOR RELEASE: 06/23/11: CIA-RDP86-00513R001031700034-6

APPROVED FOR RELEASE: 06/23/11: CIA-RDP86-00513R001031700034-6

MAKUSHKIN, P.N., kand.med.nauk; VERSILOVA, E.B.

USSR

Gas exchange and energy losses in patients operated on under potentiated anesthesia. Vest.khir. 87 no.11:96-101 N '61. (MIRA 15:11)

1. Iz kafedry obshchey khirurgii (zav. - prof. G.P. Zaytsev) pediatricheskogo fakul'teta 2-go Moskovskogo meditsinskogo instituta im. N.I. Pirogova. Adres avtorov: Moskva, Pavlovskaya ul., d.25, 4-ya gorodskaya bolintsa.

(ANESTHESIA) (RESPIRATION) (METABOLISM)

APPROVED FOR RELEASE: 06/23/11: CIA-RDP86-00513R001031700034-6

APPROVED FOR RELEASE: 06/23/11: CIA-RDP86-00513R001031700034-6

MAKUSHKIN, P. N.

"Some Biochemical Characteristics of the Blood and Spinal Fluid During Sepsis and Extremely Suppurative Infections." Cand Med Sci, Second Moscow State Medical Inst imeni I. V. Stalin, 29 Nov 54. (VM, 18 Nov 54)

Survey of Scientific and Technical Dissertations Defended at USSR Higher Educational Institutions (11)

SO: Sum. No. 521, 2 Jun 55

APPROVED FOR RELEASE: 06/23/11: CIA-RDP86-00513R001031700034-6

APPROVED FOR RELEASE: 06/23/11: CIA-RDP86-00513R001031700034-6

MAKUSHKIN, P.N.

Causes of mortality in extensive resections for acute intestinal obstruction. Uchen. zapiski vtor. moskov. med. Inst. Stalina Vol 2:72-79 1951. (CIML 21:4)

1. Clinic of General Surgery (Director--Prof. G.P. Zaytsev) of the Pediatrics Faculty.

APPROVED FOR RELEASE: 06/23/11: CIA-RDP86-00513R001031700034-6

APPROVED FOR RELEASE: 06/23/11: CIA-RDP86-00513R001031700034-6

MAKUSHKIN, L.M.

Bases for electric bulbs. Standartizatsiia 27 no.12:44 D '63. (MIRA 17:4)

APPROVED FOR RELEASE: 06/23/11: CIA-RDP86-00513R001031700034-6

APPROVED FOR RELEASE: 06/23/11: CIA-RDP86-00513R001031700034-6

VESELOV, S.I.; GUSHCHINA, N.; MAKUSHKIN, E.G.; RULINA, L.B.; CHICHILO, I.K.; SHABUNIN, Ye.M.; CHILIKIN, M.G., prof.; YUSHKOV, S.B.; GOSIS, I.N.; RYABTSEV, N.I.; KRUPOVICH, V.I.; PETROV, N.I.; PATABUNEV, A.D.; BEYRAKH, Z. Ya., doktor tekhn. nauk

Twenty-first anniversary of the publication "Promyshlennaia energetika". Prom. energ. 21 no. 1:5-7 Ja '66 (MIRA 19:1)

1. Nachal'nik Gosudarstvennoy inspektsii po energeticheskomu nadzoru Ministerstva energetiki i elektrifikatsii SSSR (for Veselov). 2. Moskovskoye pravleniye nauchno-tekhnicheskogo obshchestva energeticheskoy promyshlennosti (for Gushchina). 3. Predsedatel' Sverdlovskogo pravleniya Nauchno-tekhnicheskogo obshchestva energeticheskoy promyshlennosti (for Makushkin). 4. Glavnyy energetik Pervogo gosudarstvennogo podshipnikovogo zavoda (for Chichilo). 5. Glavnyy energetik Moskovskogo metallurgicheskogo zavoda "Serp i molot" (for Shabunin). 6. Rektor Moskovskogo energeticheskogo instituta (for Chilikin). 7. Glavnyy inzhener instituta Tyazhpromelektroproyekt (for Krupovich). 8. Glavnyy konstruktor Moskovskogo zavoda teplovoy avtomatiki (for Beyrakh).

APPROVED FOR RELEASE: 06/23/11: CIA-RDP86-00513R001031700034-6

APPROVED FOR RELEASE: 06/23/11: CIA-RDP86-00513R001031700034-6

MAKUSHKIN, D.O.

Results of using diamond-impregnated bits in exploratory drilling. (MIRA 16:10)
Trudy MGRI 39:132-137 '63.

APPROVED FOR RELEASE: 06/23/11: CIA-RDP86-00513R001031700034-6

APPROVED FOR RELEASE: 06/23/11: CIA-RDP86-00513R001031700034-6

DYMARSKIY, Yakov Semenovich; LOZINSKIY, Nikolay Nikolayevich; MAKUSHKIN, Aleksandr Timofeyevich; ROZENBERG, [redacted]adimir Rudol'fovich; OGANESYAN, L.A., kand. tekhn. nauk, retsenzent; GINZBURG, R.I., kand. tekhn. nauk; BUROV, V.N., nauchn. red.; CHICHKANOVA, V.S., red.; KONTOROVICH, A.I., tekhn. red.

[Programmer's manual] Spravochnik programmista. [By] IA.S. Dymarskii i dr. Leningrad, Sudpromgiz. Vol.1. 1963. 627 p. (MIRA 16:9)

(Programming (Electronic computers))--Handbooks, manuals, etc.)

APPROVED FOR RELEASE: 06/23/11: CIA-RDP86-00513R001031700034-6

APPROVED FOR RELEASE: 06/23/11: CIA-RDP86-00513R001031700034-6

MAKUSHKIN, A.P.

Determining the thickness of polycaprolactam coatings obtained in a fl dized bed. Vest. mashinostr. 44 no.10:46-49 O '64.
(MIRA 17:11)

APPROVED FOR RELEASE: 06/23/11: CIA-RDP86-00513R001031700034-6

APPROVED FOR RELEASE: 06/23/11: CIA-RDP86-00513R001031700034-6

MAKUSHKIN, A.P.

Determination of the velocities of fluidization of beds with channel formation. Khim. i tekh. topl. i masel 8 no.5:51-55 My '63. (MIRA 16:8)

1. Gosudarstvennyy vsesoyuznyy nauchno-issledovatel'skiy tekhnologicheskiy institut remonta i ekspluatatsii mashinno-traktornogo parka.

APPROVED FOR RELEASE: 06/23/11: CIA-RDP86-00513R001031700034-6

APPROVED FOR RELEASE: 06/23/11: CIA-RDP86-00513R001031700034-6

L 13524-63

ACCESSION NR: AP3002601

of the powder used in various experiments ranged between 60 and 370 Microns. The temperature of machine parts varied between 220 and 330C. Tests of adhesion, bending, tension, hardness, and durability were made on coated specimens. It is concluded that the best temperature of the machine parts at the moment of coating is 280-300C and the best grain size of polycaprolactam powder is 140-260 Microns. Orig. art. has: 6 figures.

ASSOCIATION: none

SUBMITTED: 00 DATE ACQ: 15Jul63 ENCL: 00

SUB CODE: 00 NO REF SOV: 007 OTHER: 001

Card 2/2

APPROVED FOR RELEASE: 06/23/11: CIA-RDP86-00513R001031700034-6

APPROVED FOR RELEASE: 06/23/11: CIA-RDP86-00513R001031700034-6

L 13524-63 EWP(j)/EWP(q)/EWT(m)/BDS AFFTC/ASD Pc-4 RM/JD/WB

ACCESSION NR: AP3002601 S/0122/63/000/006/0038/0041 63

AUTHOR: Bereznikov, V.V. (Candidate of technical sciences); Makushkin, A.R. (Engineer)

TITLE: Influence of temperature and grain size on the quality of polycaprolactam metal coatings produced in a pseudo-fluidized bed

SOURCE: Vestnik mashinostroyeniya, no. 6, 1963, 38-41

TOPIC TAGS: coating, polycaprolactam, machine parts, grain size, temperature

ABSTRACT: Experiments were made to determine the best method for coating machine parts with polycaprolactam. This coating helps to recondition worn parts and improve their durability. Two factors were studied in particular: the preheating temperature of the machine part to be coated and the grain size of the polycaprolactam powder used as coating. The thickness of the coating varied between 0.9 and 1.1 mm. The powder was sprayed over the preheated machine part and a jet of air at 18-20C and 40-50% moisture content was blown over it. The heat caused the melting of the layer. The grain size

Card 1/2

APPROVED FOR RELEASE: 06/23/11: CIA-RDP86-00513R001031700034-6

APPROVED FOR RELEASE: 06/23/11: CIA-RDP86-00513R001031700034-6

BEREZNIKOV, V.V., kand.tekhn.nauk; MAKUSHKIN, A.P., inzh.

Application of plastic coatings on machinery components in a fluidized bed. Trakt.i sel'khozmash. no.8:39-42 Ag '62. (MIRA 15:8)

1. Gosudarstvennyy vsesoyuznyy nauchno-issledovatel'skiy tekhnologicheskiy institut remonta i ekspluatatsii traktorov i sel'skokhozyaystvennykh mashin.
(Protective coatings) (Plastics)

APPROVED FOR RELEASE: 06/23/11: CIA-RDP86-00513R001031700034-6

APPROVED FOR RELEASE: 06/23/11: CIA-RDP86-00513R001031700034-6

off the coatings. Another important factor is the degree of roughness of the surfaces. Coatings adhere best to phosphated steel surfaces, if these have a mean roughness of 10 μ. There are 3 figures.

ASSOCIATION: Gosudarstvennyy vsesoyuznyy nauchno-issledovatel'skiy tekhnologicheskiy institut remonta i ekspluatatsii mashino-traktornogo parka ((State-All-Union Scientific Research Technological Institute for the Repair and Utilization of Tractors and Agricultural Machinery)

APPROVED FOR RELEASE: 06/23/11: CIA-RDP86-00513R001031700034-6

APPROVED FOR RELEASE: 06/23/11: CIA-RDP86-00513R001031700034-6

40669

1.1810

S/032/62/028/009/002/009
B104/B102

AUTHOR: Makushkin, A. P.

TITLE: A method of determining the adhesive power of polymeric coating formed as a pseudo-liquified layer

PERIODICAL: Zavodskaya laboratoriya, v. 28, no. 9, 1962, 1100 - 1102

TEXT: Using the method described, two steel cylinders (diameter 20 mm) stuck together by a film of polymers are torn apart by a tensile testing machine. Preliminary tests showed that the steel surfaces to which polymers adhere best are those which have been sandblasted and then phosphated, whereas cast iron requires sandblasting only. After the cylinders had been preheated to a certain temperature they were placed into a pseudo-liquified layer of pulverized polycaprolactam; then the adhering powder was melted and the surfaces of the cylinders were forced together under a certain pressure for 24 hours. With coatings of 0.1 - 1 mm thickness the adhesion does not depend on the thickness. Preheating has a great influence on the adhesive power. With temperatures between 280 and 300°C a pull ranging up to 450 kg/cm^2 for steel and 350 kg/cm^3 for cast iron is required to tear

Card 1/2

APPROVED FOR RELEASE: 06/23/11: CIA-RDP86-00513R001031700034-6

APPROVED FOR RELEASE: 06/23/11: CIA-RDP86-00513R001031700034-6

MAKUSHKIN, A.G.

ASKEROV, M.G.; MAKUSHKIN, A.G.; POPOVA, N.V.

Effect of the elasticity of fluids and the production string in major well repairs. Neft.khoz. 35 no.2:40-42 F '57. (MLRA 10:3)
(Oil wells--Equipment and supplies--Repairing)

APPROVED FOR RELEASE: 06/23/11: CIA-RDP86-00513R001031700034-6

APPROVED FOR RELEASE: 06/23/11: CIA-RDP86-00513R001031700034-6

MAKUSHKIN, A.G.; LALAYEV, M.I.

Using turbodrills to bore through bottlenecks in major well repairs. Azerb.neft.khoz.35 no.11:26-29 N '56. (MLRA 10:4)
(Turbodrills) (Oil well drilling)

APPROVED FOR RELEASE: 06/23/11: CIA-RDP86-00513R001031700034-6

APPROVED FOR RELEASE: 06/23/11: CIA-RDP86-00513R001031700034-6

ASKEROV, M.G.; MAKUSHKIN, A.G.; POPOVA, N.V.

Discharge pressure in the case of insulating wells against extraneous waters. Azerb.neft.khoz. 35 no.8:23-25 Ag '56. (MLRA 9:10)

(Oil well cementing)

APPROVED FOR RELEASE: 06/23/11: CIA-RDP86-00513R001031700034-6

APPROVED FOR RELEASE: 06/23/11: CIA-RDP86-00513R001031700034-6

MAKUSHKIN, A.G.

AID P - 2094

Subject : USSR/Mining

Card 1/1 Pub. 78 - 7/24

Authors : Askerov, M. G., Shafiyev, B. N., Makushkin, A. G. and Popova, N. V.

Title : Ways of improving well cementing in major overhauls

Periodical: Neft. khoz., v.33, no.4, 35-39, Ap 1955

Abstract : Dependent upon the condition of the well whose walls have been damaged and require tightening and sealing of the damaged places, different amounts of cement are necessary. The coefficient of absorbing capacity, the coefficient of permeability, the kind and size of fissures and the amount and pressure of the water flow into the well will determine the amount of cement mixture to be pumped, the pressures to be applied, and also the cementing methods to be used. Charts, diagrams.

Institution: None

Submitted : No date

APPROVED FOR RELEASE: 06/23/11: CIA-RDP86-00513R001031700034-6

APPROVED FOR RELEASE: 06/23/11: CIA-RDP86-00513R001031700034-6

MAKUSHKIN, A.

Great matters of a small club. Voen. znan. 40 no.6:38-39 Je '64.
(MIRA 17:7)

APPROVED FOR RELEASE: 06/23/11: CIA-RDP86-00513R001031700034-6

APPROVED FOR RELEASE: 06/23/11: CIA-RDP86-00513R001031700034-6

MAKUSHKIN, A.

Clubs for youth of premilitary age. Voen. znan. 40 no.2:28-29 F '64.
(MIRA 17:2)

APPROVED FOR RELEASE: 06/23/11: CIA-RDP86-00513R001031700034-6

APPROVED FOR RELEASE: 06/23/11: CIA-RDP86-00513R001031700034-6

ILLEGIBLE

APPROVED FOR RELEASE: 06/23/11: CIA-RDP86-00513R001031700034-6

APPROVED FOR RELEASE: 06/23/11: CIA-RDP86-00513R001031700034-6

CA

Ceresin and ozocerite compositions. D. A. Chernyaev and N. S. Makualinskaya. U.S.S.R. 69,177, Aug. 31, 1947. Filter-press residues of ceresin production are extd with molten paraffin. The ext. is cooled, thereby giving a ceresin compn. The residue from filtering paraffin ext. is in turn extd. with a light oil or kerosene. The solvent is driven off, and the residue melted together with paraffin, thereby producing an ozocerite compn. M. Hosch

ASM-SLA METALLURGICAL LITERATURE CLASSIFICATION

APPROVED FOR RELEASE: 06/23/11: CIA-RDP86-00513R001031700034-6

APPROVED FOR RELEASE: 06/23/11: CIA-RDP86-00513R001031700034-6

22

PROCESSES AND PROPERTIES INDEX

Regenerating spent clay from the contact treating plants.

B. Ruibak, N. Makushinskaya and M. Ter-Akopova. *Azerbaidzhanskoe Neftyanoe Khozyaistvo* 1934, No. 10, 74 ff.—Spent clay should be extd. in towers with plates. The clay layer should not exceed 25 cm. and the plates should be heated with closed steam. The bottom of the tower should be equipped with a steam coil for the distn. of the solvent and a redux condenser should be provided on top for the condensation of the solvent vapors. The condenser must be connected with receivers for gasoline and C_6H_6 and EtOH receivers. A. A. Boehtlingk

ASM-SLA METALLURGICAL LITERATURE CLASSIFICATION

APPROVED FOR RELEASE: 06/23/11: CIA-RDP86-00513R001031700034-6

APPROVED FOR RELEASE: 06/23/11: CIA-RDP86-00513R001031700034-6

1ST AND 2ND ORDERS

PROCESSES AND PROPERTIES INDEX

3RD AND 4TH ORDERS

22

A

An accelerated method for the determination of the acidity of dark petroleum products. B. M. Ruibak and N. S. Makushinskaya. *Neftyanoe Khozyaistvo* 25, No. 0, 42-3(1933).—Twenty cc. of the petroleum product was put in a 100-cc. glass-stoppered cylinder, together with 40 cc. of neutralized alc. The cylinder was then shaken for 5 min. and placed in a thermostat heated to 50 or 60°. The cold alc. ext. was then dissolved in 10-15 cc. of a mixt. of alc. and C_6H_6 (1:4) and titrated with a 0.1 *N* alc. NaOH. This procedure cut the time for detg. the acidity from 24 to 1 hr. A. A. Boehtlingk

COMMON ELEMENTS

COMMON VARIABLES

MATERIALS INDEX

ASM-SLA METALLURGICAL LITERATURE CLASSIFICATION

AUTHOR INDEX

1ST AND 2ND LETTER

2ND LETTER

2ND AND 4TH ORDERS

APPROVED FOR RELEASE: 06/23/11: CIA-RDP86-00513R001031700034-6

APPROVED FOR RELEASE: 06/23/11: CIA-RDP86-00513R001031700034-6

PAKA, V.T.; MAKUSHKIN, V.P.; NAUMENKO, M.F.; CHIGRAKOV, K.I.

Lowering counters from a moving ship. Okeanologiia 4 no.1:128-131 '64. (MIRA 17:4)

1. Kaliningradskoye otdeleniye Instituta okeanologii AN SSSR.

APPROVED FOR RELEASE: 06/23/11: CIA-RDP86-00513R001031700034-6

APPROVED FOR RELEASE: 06/23/11: CIA-RDP86-00513R001031700034-6

ABRAMOV, F.A., doktor tekhn.nauk, prof.; STREYMANN, V.E., inzh.; MAKUSHIN, V.N., inzh.-konstruktor

MB-1 microbarometer for pressure surveys in mines. Gor.zhur. no.4:74 Ap '62. (MIRA 15:4)

1. Dnepropetrovskiy gornyy institut (for Abramov, Streymann).
2. Moskovskiy zavod "Gidrometpribor" (for Makushin).
(Mine ventilation) (Barometers)

APPROVED FOR RELEASE: 06/23/11: CIA-RDP86-00513R001031700034-6

APPROVED FOR RELEASE: 06/23/11: CIA-RDP86-00513R001031700034-6

MAKUSHIN, V.M., prof.; NEKRASOVA, L.F., inzh.

Some cases of the stability of spiral rods. Vest.mashinostr. 45 no.3:19-23 Mr '65. (MIRA 18:7)

APPROVED FOR RELEASE: 06/23/11: CIA-RDP86-00513R001031700034-6

APPROVED FOR RELEASE: 06/23/11: CIA-RDP86-00513R001031700034-6

MAKUSHIN, V.M., prof.

Approximate investigation of the stability of rods compressed by evenly distributed longitudinal forces (method of flexible lines). Rasch.na proch. no.10:173-210 '64. (MIRA 18:1)

APPROVED FOR RELEASE: 06/23/11: CIA-RDP86-00513R001031700034-6

APPROVED FOR RELEASE: 06/23/11: CIA-RDP86-00513R001031700034-6

MAKUSHIN, V.M., prof.

Critical value of uniformly distributed longitudinal forces for certain cases of the fastening of compressed-support ends. Rasch. na prochn. no.9:253-269 '63 (MIRA 16:12)

APPROVED FOR RELEASE: 06/23/11: CIA-RDP86-00513R001031700034-6

APPROVED FOR RELEASE: 06/23/11: CIA-RDP86-00513R001031700034-6

ITSKOVICH, G.M.; VINOKUROV, A.I.; Prinimal uchastiye:
MININ, L.S.; MAKUSHIN, V.M., laureat Leninskoy premii,
prof., retsenzent; SHRIRO, G.S., kand. tekhn.nauk, nauchn.
red.; BORODINA, N.N., red.; CHIZHEVSKIY, E.M., tekhn.red.

[Manual for solving problems on the strength of materials]
Rukovodstvo k resheniiu zadach po soprotivleniiu materialov.
Moskva, Rosvuzizdat, 1963. 351 p. (MIRA 16:8)
(Strength of materials--Problems, exercises, etc.)

APPROVED FOR RELEASE: 06/23/11: CIA-RDP86-00513R001031700034-6

APPROVED FOR RELEASE: 06/23/11: CIA-RDP86-00513R001031700034-6

MAKUSHIN, V.M., prof.

Effective use of the energy method in investigating the elastic stability of rods and plates. Rasch.na prochn. no.8:225-252 '62. (MIRA 15:8)

(Elastic plates and shells) (Elastic rods and wires)

APPROVED FOR RELEASE: 06/23/11: CIA-RDP86-00513R001031700034-6

APPROVED FOR RELEASE: 06/23/11: CIA-RDP86-00513R001031700034-6

AGAMIROV, V.L., kand. tekhn. nauk; AMEL'YANCHIK, A.V., inzh.; ANDREYEVA, L.Ye., kand. tekhn. nauk; BIDERMAN, V.L., doktor tekhn. nauk; BOYARSHINOV, S.V., kand. tekhn. nauk; VOL'MIR, A.S., prof., doktor tekhn. nauk; DIMENTBERG, F.M., doktor tekhn. nauk; KOSTYUK, A.G., kand. tekhn. nauk; MAKUSHIN, V.M., kand. tekhn. nauk; MASLOV, G.S., kand. tekhn. nauk; MALININ, N.N., prof., doktor tekhn. nauk; PONOMAREV, S.D., prof. doktor tekhn. nauk; PRIGOROVSKIY, N.I., prof., doktor tekhn. nauk; SERENSEN, S.V., akademik; STEPANOVA, V.S., inzh.; STRELYAYEV, V.S., inzh.; TRAPEZIN, I.I., prof., doktor tekhn. nauk; UMANSKIY, A.A., prof., doktor tekhn. nauk; FEODOS'YEV, V.I., prof., doktor tekhn. nauk; SHATALOV, K.T., doktor tekhn.nauk; YUMATOV, V.P., kand. tekhn. nauk; BLAGOSKLONOVA, N.Yu., red. izd-va; YEVSTRAT'YEV, A.I., red. izd-va; SOKOLOVA, T.F., tekhn. red.

[Manual for a mechanical engineer in six volumes] Spravochnik mashinistroitelia v shesti tomakh. Red. sovet N.S.Acherkan i dr. Izd.3., ispr. i dop. Moskva, Mashgiz. Vol.3. 1962. 651 p. (MIRA 15:4)

1. Akademiya nauk USSR (for Serensen).
(Machinery--Design)

APPROVED FOR RELEASE: 06/23/11: CIA-RDP86-00513R001031700034-6

APPROVED FOR RELEASE: 06/23/11: CIA-RDP86-00513R001031700034-6

MAKUSHIN, V.M., kand.tekhn.nauk, dotsent

Problems in the arrangement of supports of length standards and measuring rules. Rasch.na prochn. no.7:153-162 '61.
(MIRA 14:11)

(Rulers (Instruments))

APPROVED FOR RELEASE: 06/23/11: CIA-RDP86-00513R001031700034-6

APPROVED FOR RELEASE: 06/23/11: CIA-RDP86-00513R001031700034-6

PONOMAREV, S.D., doktor tekhn.nauk,prof.; MAKUSHIN, V.M.,prof.

Review of "Plates, disks, beam wall (strength, stability, and vibrations)"by D.V.Vainberg, E.D.Vainberg. Vest.mash. 40 no.10: 83-84 O'60. (MIRA 13:10)

(Mechanical engineering) (Strains and stresses)
(Vainberg, D.V.) (Vainberg, E.D.)

APPROVED FOR RELEASE: 06/23/11: CIA-RDP86-00513R001031700034-6

APPROVED FOR RELEASE: 06/23/11: CIA-RDP86-00513R001031700034-6

33393
S/572/60/000/006/011/018
D224/D304

Some cases of stability ...

The constants of integration are different from 0 only if the determinant Δ of 4 linear equations that correspond to the boundary conditions is equal to 0. If the ratio $a/b = \alpha/\beta$ is fixed, the values of β satisfying the equation $\Delta = 0$ must be found by trial with the aid of tables of cylindrical functions. Three cases are considered: 1) Both edges clamped; 2) and 3) one of the edges clamped and the other supported. There are 5 figures, 3 tables and 6 references: 5 Soviet-bloc and 1 non-Soviet-bloc.

Card 2/2

APPROVED FOR RELEASE: 06/23/11: CIA-RDP86-00513R001031700034-6

APPROVED FOR RELEASE: 06/23/11: CIA-RDP86-00513R001031700034-6

33393
S/572/60/000/006/011/018
D224/D304

10.7000

AUTHOR: Makushin, V. M., Docent

TITLE: Some cases of stability of a compressed ring-shaped plate

SOURCE: Raschety na prochnost'; teoreticheskiye i eksperimental'nyye issledovaniya prochnosti mashinostroitel'nykh konstruktsiy. Sbornik statey. No. 6, Moscow, 1960, 171-181

TEXT: The author considers a ring-shaped plate compressed by radial forces uniformly distributed on its inner and outer edge. Putting a = inner radius, b = outer radius, r = variable radius, $\alpha = \lambda a$, $\beta = \lambda b$, $p = \lambda r$, λ being the ratio of load intensity to rigidity, the general solution of the differential equation of the problem is

$$w(\rho) = C_1 + C_2 \ln \rho + C_3 J_0(\rho) + C_4 Y_0(\rho) \qquad (2)$$

Card 1/2

APPROVED FOR RELEASE: 06/23/11: CIA-RDP86-00513R001031700034-6

APPROVED FOR RELEASE: 06/23/11: CIA-RDP86-00513R001031700034-6

MAKUSHIN, V.M., dotsent, kand.tekhn.nauk

One case of stability of a compressed annular plate. Rasch.na prochn. no.5:236-248 '60. (MIRA 13:7)
(Elastic plates and shells)

APPROVED FOR RELEASE: 06/23/11: CIA-RDP86-00513R001031700034-6

APPROVED FOR RELEASE: 06/23/11: CIA-RDP86-00513R001031700034-6

ITSKOVICH, Georgiy Meyerovich; MAKUSHIN, V.M., dotsent, kand.tekhn.nauk, retsenzent; LYZHENKOV, A.A., inzh., retsenzent; RABINOVICH, S.V., dotsent, kand.tekhn.nauk, nauchnyy red.; LIPKINA, T.G., red.izd-va; YEZHOVA, L.L., tekhn.red.

[Strength of materials] Soprotivlenie materialov. Moskva, Gos. izd-vo "Vysshaia shkola," 1960. 529 p.

(Strength of materials) (MIRA 14:3)

APPROVED FOR RELEASE: 06/23/11: CIA-RDP86-00513R001031700034-6

APPROVED FOR RELEASE: 06/23/11: CIA-RDP86-00513R001031700034-6

Makushin, V.M.

PHASE I BOOK EXPLOITATION SOV/3862

Raschety na prochnost': teoreticheskiye i eksperimental'nyye issledovaniya prochnosti mashinostroitel'nykh konstruktsiy; sbornik statey, vyp. 5 (Strength Analysis; Theoretical and Experimental Investigations of the Strength of Machine Elements; Collection of Articles, No. 5) Moscow, Mashgiz, 1960. 298 p. Errata slip inserted. 5,000 copies printed.

Ed.: V.N. Arbuzov, Candidate of Technical Sciences; Ed. of Publishing House: L.N. Danilov; Tech. Ed.: B.I. Model'; Managing Ed. for Literature on General Technical and Transport Machine Building (Mashgiz): A.P. Kozlov, Engineer; Editorial Board: G.S. Glushkov, Doctor of Technical Sciences, Professor; V.M. Makushin, Candidate of Technical Sciences, Docent (Secretary); S.B. Ponomarev, Honored Scientist and Technologist of the RSFSR, Doctor of Technical Sciences, Professor; S.V. Serensen, Member of the Academy of Sciences UkrSSR, Doctor of Technical Sciences, Professor; S.N. Sokolov, Doctor of Technical Sciences, Professor; N.D. Tarabasov, Doctor of Technical Sciences, Professor; and Ye.N. Tikhomirov, Honored Scientist and Technologist of the RSFSR, Professor (Chairman).

PURPOSE: The book is intended for engineers and scientists specializing in stress analysis.

COVERAGE: This collection of 15 articles deals with the design and calculation of machine elements for strength, rigidity, and stability. The collection is divided into three sections; 1) calculation for strength, 2) stress and strain analysis, and 3) calculation for stability. Methods and formulas for calculating strength parameters are presented. No personalities are mentioned. References follow several of the articles.

Trumbachev, V.F. [Candidate of Technical Sciences].
Photoelastic Investigation of Stress Distribution in Specimens Loaded Under Their Own Weight 226

Use of photoelasticity in determining the effects of stress concentration and the intensity and direction of the principal stresses in selected models are outlined.

SECTION III. CALCULATIONS FOR DYNAMIC LOAD AND FOR STABILITY OF CONSTRUCTIONAL ELEMENTS

Makushin, V.M. One Case of Stability Calculated for a Compressed Annular Disk 236

An individual case of experimental stress analysis is reported. It involves the loading of a compressed annular disk [circular plate]. Critical load coefficients are deduced and conditions for stability defined.

Trapezin, I.I. [Candidate of Technical Sciences, Docent].
Stability Conditions for a Thin Conical Shell Closed at Top and Under Lateral Hydrostatic Pressure 249

Stability conditions for a submerged thin-walled conical shell exposed to hydrostatic pressure acting sidewise upon the cone are analyzed and load limits prior to buckling defined.

Bolotin, V.V. [Doctor of Technical Sciences, Professor], and G.A. Boychenko [Candidate of Physics and Mathematics, Docent].
Investigation of the Phenomenon of Snapping [Local "Elastic" Loss of Stability] in Thin Shells Under the Impact of Dynamic Load 259

Local buckling-snapping stresses effecting thin-walled elastic shells are analyzed and equations for stability conditions derived.

Shcheglov, A.A. [Docent]. The Problem of Determining Critical [Whirling] Speeds of a Shaft of Variable Cross Section 273

Values for critical speeds of a rotating shaft are derived and the effects of deflecting forces analyzed.

APPROVED FOR RELEASE: 06/23/11: CIA-RDP86-00513R001031700034-6

APPROVED FOR RELEASE: 06/23/11: CIA-RDP86-00513R001031700034-6

KALININA, N.; KOSILOV, S.; MAKUSHIN, V.

Problems of the physiology of work (" Physiology of work processes" by M.I.Vinogradov. Reviewed by N.Kalinina, S.Kosilov, V.Makushin). Sots.trud 4 no.9:150-155 S '59.

(MIRA 13:1)

(Work) (Psychology, Physiological)
(Vinogradov, M.I.)

APPROVED FOR RELEASE: 06/23/11: CIA-RDP86-00513R001031700034-6

APPROVED FOR RELEASE: 06/23/11: CIA-RDP86-00513R001031700034-6

MAKUSHIN, V.M., kand.tekhn.nauk dots.

Critical values of the intensity of radial compression stresses for circular thin plates. Rasch.na prochn. no.4:271-298 '59. (MIRA 13:4)

(Elastic plates and shells)

APPROVED FOR RELEASE: 06/23/11: CIA-RDP86-00513R001031700034-6

APPROVED FOR RELEASE: 06/23/11: CIA-RDP86-00513R001031700034-6

Strength Calculations in Mechanical Engineering (Cont.) SOV/3423

COVERAGE: The book covers methods of calculation for stability, stress, creep, fatigue, etc. Particular attention is paid to strength calculations of moving machine parts, such as turbine buckets and discs, with reference to stress and creep data. Other problems treated include: analysis of various types of vibrations; calculations for dynamic load varying with time; stress concentration and fatigue failures; stress distribution in bars, plates, shells, etc.; stress coefficients for rotating discs; and behavior of material under conditions of stress. S. D. Ponomarev reviewed the entire book and wrote Chapter I and section 5 of Chapter III. Chapter II and the remainder of Chapter III were written by N. N. Malinin. Chapter IV - X were written by V. L. Biderman. Chapter XI was compiled by K. K. Likharev and N. N. Malinin. Chapters XII - XVI were written by V. M. Makushin, Chapter XVII - by V. I. Feodos'yev, and the Appendix by K. K. Likharev. There are 857 references: 712 Soviet, 90 English, 54 German, and 1 French.

TABLE OF CONTENTS:

Foreword

Card 2/15

APPROVED FOR RELEASE: 06/23/11: CIA-RDP86-00513R001031700034-6

APPROVED FOR RELEASE: 06/23/11: CIA-RDP86-00513R001031700034-6

MAKUSHIN, V.M.

PHASE I BOOK EXPLOITATION SOV/3423

Ponomarev, Sergey Dmitriyevich, Honored Worker in Science and Technology, Professor, Doctor of Technical Sciences, Vladimir Mikhaylovich Makushin, Nikolay Nikolayevich Malinin, and Vsevolod Ivanovich Feodos'yev

Raschety na prochnost' v mashinostroyenii, tom 3: Inertsionnyye nagruzki. Kolebaniya i udarnyye nagruzki. Vynoslivost'. Ustoychivost' (Design for Strength in Machinery Construction, Vol 3: Inertial Loads. Vibrations and Impact Loads. Endurance. Stability) Moscow, Mashgiz, 1959. 1118 p. Errata slip inserted. 12,000 copies printed.

Ed. of Publishing House: N. P. Chernysheva; Tech. Ed.: B. I. Model'; Managing Ed. for Literature on Heavy Machine Building: S. Ya. Golovin, Engineer; Ed.: Sergey Dmitriyevich Ponomarev, Honored Worker in Science and Technology, Professor, Doctor of Technical Sciences.

PURPOSE: The book is intended for design and production engineers in machine-building enterprises. It will be of interest to students of engineering design.

Card ~~1/15~~

APPROVED FOR RELEASE: 06/23/11: CIA-RDP86-00513R001031700034-6

APPROVED FOR RELEASE: 06/23/11: CIA-RDP86-00513R001031700034-6

Makushin, V. M.

14(10); 18(7) PHASE I BOOK EXPLOITATION SOV/3189

Raschety na prochnost'; teoreticheskiye i eksperimental'nyye issledovaniya prochnosti mashinostroitel'nykh konstruktsiy: sbornik statey Vyp. 4 (Strength Calculations: Theoretical and Experimental Studies of the Strength of Machine Structural Elements: Collection of Articles, No. 4) Moscow, Mashgiz, 1959. 393 p. Errata slip inserted. 3,600 copies printed.

Editorial Commission: Ye. N. Tikhomirov (Chairman) Honored Worker in Sciences and Technology of the RSFSR, Professor, S. V. Serensen, Corresponding Member, Ukrainian SSR Academy of Sciences, Doctor of Technical Sciences, Professor, G. S. Glushkov, Doctor of Technical Sciences, Professor, S.D. Ponomarev, Doctor of Technical Sciences, Professor, S. N. Sokolov, Doctor of Technical Sciences, Professor, N. D. Tarabasov, Doctor of Technical Sciences, Professor V. M. Makushkin (Secretary) Candidate of Technical Sciences, Docent: Ed.: N. D. Tarabasov, Doctor of Technical Sciences, Managing Ed. for Literature on General Technical and Transport Machine Building: V. I. Kubarev, Engineer: Ed. of Publishing House: R. M. Korableva, and A. G. Nikitin: Tech. Eds.: Z. I. Chernova, and V. D. El'kind.

PURPOSE: This book is intended for engineers and designers in machine-building as well as for engineers of other specialties working on stress analysis. It may be used as a text by students in the field.

COVERAGE: This book contains original stress analysis calculations made on machinery elements and parts. Analyses are made of coiled springs with an arbitrary helix angle, bending of turbine discs, strain state of flat pistons, and a circular cylinder. A number of original applications of general methods of the theory of elasticity to the study of lateral bending and torsion of rods is given. In the calculations on stability, new methods of determining critical forces for compressed rods and analyzing the stability of circular and ring-shaped plates are applied. Calculations for dynamic loadings are represented by a study of the analysis of variations of the indicators of devices during vibration. References accompany individual articles.

PART III. ELASTIC STABILITY OF CONSTRUCTION ELEMENTS

Popov, A. A. [Doctor of Technical Sciences, Professor]. New Means of the Grapho-analytic Determination of Critical Forces in Longitudinal Bending 243
1. Brief information on the method of foci 243
2. Determination of critical forces for cantilever rods of constant cross-section 247
3. Example 1 249
4. Example 2 253
5. Example 3 254
6. Values of stability coefficents k 255
7. Determination of critical forces for cantilever rods of variable cross-section 255
8. Example 4 258
9. Example 5 259
10. Example 6 261
11. Determination of critical forces for rods with two supports 265
12. Example 7 267
13. Example 8 269

Makushin, V. M. [Candidate of the Technical Sciences, Docent]. Critical Values of the Intensity of Radial Compressible Forces for Circular Thin Plates 271
1. Differential equation of the mean surface of a plate and its integration 272
2. Polarly symmetric equilibrium forms of a continuous plate 278
3. Equilibrium forms not having axial symmetry 281
4. Characteristics of some equilibrium forms of continuous circular plates, with clamped contour of compressed by radial forces uniformly distributed along the contour 285
5. Plates with supported center 290

Card 8/11

APPROVED FOR RELEASE: 06/23/11: CIA-RDP86-00513R001031700034-6

APPROVED FOR RELEASE: 06/23/11: CIA-RDP86-00513R001031700034-6

MAKUSHIN, V.M., dots.

Values of critical forces for compressed three-span beams with uniform cross section. Rasch. na prochn. no.3:295-309 '58.
(MIRA 12:2)

(Girders)

APPROVED FOR RELEASE: 06/23/11: CIA-RDP86-00513R001031700034-6

APPROVED FOR RELEASE: 06/23/11: CIA-RDP86-00513R001031700034-6

MAKUSHIN, V.M., kand.tekhn.nauk, dots.

Investigating the stability of twisted rods with equal principal bending moduli. Rasch.na prochn. no.2:252-283 '58. (MIRA 12:2)

(Elastic rods and wires)

APPROVED FOR RELEASE: 06/23/11: CIA-RDP86-00513R001031700034-6

APPROVED FOR RELEASE: 06/23/11: CIA-RDP86-00513R001031700034-6

COVERAGE: This book deals with some problems of the applied theory of elasticity and the calculation of plastic deformation and creep. Design methods for circular and rectangular plates, shells of rotation, and thick-walled tubes are presented. The theory of contact stresses, the design of structural elements made of rubber and rubberized cord, calculations of elastoplastic strains, and calculations of steady and unsteady states of creep are discussed. No personalities are mentioned. References follow each chapter.

TABLE OF CONTENTS:

Preface

SECTION 1. DESIGN OF PLATES AND SHELLS 3

Ch. I. Theory of Flexure of Circular Plates and Its Technical Applications 7

APPROVED FOR RELEASE: 06/23/11: CIA-RDP86-00513R001031700034-6

APPROVED FOR RELEASE: 06/23/11: CIA-RDP86-00513R001031700034-6

24(6) PHASE I BOOK EXPLOITATION SOV/2397

Ponomarev, S.D., V.L. Biderman, K.K. Likharev, V.M. Makushin, N.N. Malinin, and V.L. Feodos'yev

Raschety na prochnost' v machinostroyenii. t. II: Nekotoryye zadachi prikladnoy teorii uprugosti. Raschety za predelami uprugosti. Raschety na polzuchest' (Design for Strength in Machinery Construction. Vol 2: Some Problems in the Applied Theory of Elasticity. Calculation Beyond Elastic Limits. Design for Creep) Moscow, Mashgiz, 1958. 974 p. Errata slip inserted. 15,000 copies printed.

Ed.: S.D. Ponomarev, Doctor of Technical Sciences, Professor; Ed. of Publishing House: N.P. Chernysheva; Tech. Ed.: B.N. Model'; Managing Ed. for Literature of Heavy Machine Building (Mashgiz): S.Ya. Golovin, Engineer.

PURPOSE: The book is intended for engineers, designers, and process engineers in the field of machinery design and construction. It may also be useful to students, aspirants, and scientific workers.

Card 1/17

APPROVED FOR RELEASE: 06/23/11: CIA-RDP86-00513R001031700034-6

APPROVED FOR RELEASE: 06/23/11: CIA-RDP86-00513R001031700034-6

MAKUSHIN, V.M.

14(10) PHASE I BOOK EXPLOITATION SOV/1377

Raschety na prochnost'; teoreticheskiye i eksperimental'nyye issledovaniya prochnosti mashinostroitel'nykh konstruktsiy. Sbornik statey, vyp. 3. (Calculations for Strength; Theoretical and Experimental Research on the Strength of Elements Used in Machine Construction. Collection of Articles, Vol. 3) Moscow, Mashgiz, 1958. 355 p. 4,000 copies printed.

Ed.: Tarabasov, N.D., Doctor of Technical Sciences; Editorial Board: Tikhomirov, Ye.N., Honored Worker of the RSFSR in Science and Technology, Professor (Chairman); Serensen, S.V., Active Member, Ukrainian SSR Academy of Sciences, Doctor of Technical Sciences, Professor; Glushkov, G.S., Doctor of Technical Sciences, Professor; Ponomarev, S.D., Doctor of Technical Sciences, Professor; Sokolov, S.N., Doctor of Technical Sciences, Professor; Tarabasov, N.D., Doctor of Technical Sciences, Professor; and Makushin, V.M., Candidate of Technical Sciences, Docent (Secretary); Tech. Ed.: Tikhanov, A.Ya.; Managing Ed. for Literature on General Technical and Transport Machine Building (Mashgiz): Ponomareva, K.A., Engineer.

PURPOSE: This collection of articles is intended for engineers and designers working in the field of machine construction, for research fellows, and scientific workers.

COVERAGE: The collection is an inter-vus publication of transactions concerning strength problems. It contains original reports on calculations for a number of structures used in machine building and their components. Considerations are given to calculations of the columns of hydraulic presses, the nonlinear theory of spiral springs, problems in the calculation of rubber components, theoretical and experimental investigations of circular plates of constant and variable stiffness, investigations of conical shells and of stressed assemblies of machine components. Calculations in the elasto-plastic domain are represented by an investigation of forced fits of discs and the creep of operating turbine blades. Problems of contact in the case of impact and the stability theory of elastic systems "in general terms" are considered. There are 114 references, 99 of which are Soviet, 9 English, 4 German, 1 French, 1 Polish.

Makhonina, T.N., Engineer

Makushin, V.M., Docent. Values of the Critical Forces for Compressed Triple-span Beams of Constant Cross Section 295

Tikhomirov, Ye.N., Honored Scientific and Technical Worker of the Russian Socialist Federated Soviet Republic, Professor. Contact During Impact

... Technical Sciences, Professor. Nonlinear Theory of ...

APPROVED FOR RELEASE: 06/23/11: CIA-RDP86-00513R001031700034-6

APPROVED FOR RELEASE: 06/23/11: CIA-RDP86-00513R001031700034-6

MAKUSHIN, V.M., dotsent.

"Supporting power and the design of machine parts" by S.V.Serensen and others. Reviewed by V.M.Makushin. Vest.mash. 37 no.5:84-87 My '57. (MLRA 10:5)

(Machinery--Design)

APPROVED FOR RELEASE: 06/23/11: CIA-RDP86-00513R001031700034-6

APPROVED FOR RELEASE: 06/23/11: CIA-RDP86-00513R001031700034-6

PONOMAREV, S.D., doktor tekhnicheskikh nauk, professor; BIDERMAN, V.L.; LIKHAREV, K.K.; MAKUSHIN, V.M.; MALININ, N.N.; FEODOS'YEV, V.I.; POPOVA, S.M., tekhnicheskiy redaktor; MATVEYEVA, Ye.N., tekhnicheskiy redaktor

[Calculations of the strength of materials in machine manufacture] Raschety na prochnost' v mashinostroenii. Pod red. S.D.Ponomareva. Moskva, Gos. nauchno-tekhn. izd-vo mashinostroit. lit-ry. Vol. 1. [Theoretical principles and experimental methods. Calculations for structural rod elements under static load] Teoreticheskie osnovy i eksperimental'nye metody. Raschety sterzhnevykh elementov konstruktsii pri staticheskoi nagruzke. 1956. 884 p. (MLRA 10:3)
(Strength of materials) (Elasticity)

APPROVED FOR RELEASE: 06/23/11: CIA-RDP86-00513R001031700034-6

APPROVED FOR RELEASE: 06/23/11: CIA-RDP86-00513R001031700034-6

MAKUSHIN, V.M., kandidat tekhnicheskikh nauk, dotsent.

On one of the conditions of plasticity. Vest. mash. 35 no.9:6-8 S '55. (MLRA 9:1)

(Plasticity) (Deformations (Mechanics))

APPROVED FOR RELEASE: 06/23/11: CIA-RDP86-00513R001031700034-6

APPROVED FOR RELEASE: 06/23/11: CIA-RDP86-00513R001031700034-6

MAKUSHIN, V.M.

ANDREYEV, L.Ye., kandidat tekhnicheskikh nauk; BIDERMAN, V.L., kandidat tekhnicheskikh nauk; BOYARSHINOV, S.V., kandidat tekhnicheskikh nauk; VOL'MIR, A.S., doktor tekhnicheskikh nauk; DIMENTBERG, F.M. kandidat tekhnicheskikh nauk; ZASELATELEV, S.M., inzhener; KINASOSHVILI, R.S., doktor tekhnicheskikh nauk, professor; KOVALENKO, A.D.,; MAKUSHIN, V.M., kandidat tekhnicheskikh nauk MALININ, N.N., kandidat tekhnicheskikh nauk; PONOMAREV, S.D., doktor tekhnicheskikh nauk; PRIGOROVSKIY, N.I., doktor tekhnicheskikh nauk; TETEL'BAUM, I.M., kandidat tekhnicheskikh nauk; UMANSKIY, A.A., doktor tekhnicheskikh nauk, professor; FEODOS'YEV, V.I., doktor tekhnicheskikh nauk; SERENSEN, S.V., redaktor; TRAPEZIN, I.I., kandidat tekhnicheskikh nauk, redaktor; KARGANOV, V.G., inzhener, redaktor; SOKOLOVA, T.F., tekhnicheskiy redaktor.

[Mechanical engineer's manual; in 6 volumes] Spravochnik mashinostroitelia; v shesti tomakh. Izd.2-e, ispr. i dop. Moskva, Gos. nauchno-tekhn.izd-vo mashinostroit. lit-ry, Vol.3, 1955. 563 p. (Mechanical engineering) (MLRA 8:12)

APPROVED FOR RELEASE: 06/23/11: CIA-RDP86-00513R001031700034-6

APPROVED FOR RELEASE: 06/23/11: CIA-RDP86-00513R001031700034-6

MAKUSHIN, V.M.

Ponomarev, S.D. Viderman, V.L. Likharev, K.K. Malinin, N.N. Makushin, V.M. Feodos'yev, V.I.	"Elements of Modern Methods of Calculating Strength in Machine Building"	Moscow Higher Technical School imeni Bauman

APPROVED FOR RELEASE: 06/23/11: CIA-RDP86-00513R001031700034-6