"APPROVED FOR RELEASE: 06/20/2000 CIA-RDP86-00513R001032010003-1

VUKOLOV, Ye.A.; NEGOVSKIY, A.S.; IORDANOV, Z.A.; MALYSHEV, V.I.; MASHNITISKIY, A.A.; KLYASHTORNYY, I.A.; RAYZ, A.B.; POLONSKIY, S.M.

Extraction of electrocorundum from bauxite agglomerate. Prom. energ. 15 no.10:16-18 O '60. (MIRA 13:11)

(Bauxite) (Corundum)

APPROVED FOR RELEASE: 06/20/2000 CIA-RDP86-00513R001032010003-1"

"APPROVED FOR RELEASE: 06/20/2000 CIA-RDP86-00513R001032010003-1

USSR/Physics - Combination Scattering Apr 50
Chemistry - Alcohols

"Studying the Association of a Series of Saturated Monoatomic Alcohols by the Method of Combination Scattering of Light," V. I. Malyshev, M. V. Shishkina, Phys Inst imeni Lebedev, Acad Sci USSR, 7 pp

"Zhur Eksper i Teoret Fiz" Vol XX, No 4

Presents results of studies on spectra of combination scattering of monoatomic alcohol for various temperatures. Observes that, in spectra of these alcohols, oscillation band of OH group possesses

159T98

[redacted]

USSR/Physics - Combination Scattering Apr 50
(Contd)

two maximums with frequencies 3,400/cm and 3,630/ cm ascribed to assocation and dissociation molecular spectra. Shows relative intensity of these maximums depends upon temperature, and upon magnitude and structure of hydrocarbon part of alcohol molecule. Submitted 20 Apr 49.

159T98

[redacted]

APPROVED FOR RELEASE: 06/20/2000 CIA-RDP86-00513R001032010003-1"

"APPROVED FOR RELEASE: 06/20/2000 CIA-RDP86-00513R001032010003-1

235T102

MALYSHEV, V. I.

USSR/Physics - Infrared Spectrometer 11 Sep 52

"Automatic Infrared Spectrometer," V. I. Malyshev, M. N. Markov, A. A. Shubin

"Dok Ak Nauk SSSR" Vol 86, No 2, pp 273-276

Discusses the familiar difficulty of rapid and accurate measurements of coeff of absorption in the infrared region. Describes the block scheme of subject automatic infrared spectrometer, which is convenient for quant and qual analysis when combined with the use of a graduated curve obtained according to standard mixts. Recording time was 30 min in the case of nitrobenzol and polystyrol. Submitted by Acad G. S. Landsberg 16 Jun 52.

235T102

(CA 47 no. 14: 6769 '53)

APPROVED FOR RELEASE: 06/20/2000 CIA-RDP86-00513R001032010003-1"

"APPROVED FOR RELEASE: 06/20/2000 CIA-RDP86-00513R001032010003-1

MALYSHEV, .V..I.

Chemical Abstracts
May 25, 1954
Electronic Phenomena
and Spectra

(3)

A double-beam infrared spectrophotometer. V. I. Malyshev, M. N. Markov, and A. A. Shubin. Izvest. Akad. Nauk S.S.S.R., Ser. Fiz. 17, 654-9(1953); cf. C.A. 47, 6769h.—A spectrometer is described in which the measurements are made by means of an absorbing wedge on the calibration beam. A feature of this automatic spectrophotometer is the amplifier in which the main amplification is made at a frequency of 4000 cycles and a wide band and the remainder on a narrow 9-cycle band. The bridge has a 4000-cycle voltage, and the light on the bolometer is interrupted at a frequency of 9 cycles. The total amplification is 10^{10}, the noise level 10^{-9} v., and the min. detected radiation 6×10^{-9} w. The spectrum 2.5–15 μ is registered in 30, 60, or 120'. The intensity of the diffused radiation is cut down with a MgO filter to 1%. The spectrum of polystyrene on a double-beam spectrometer is compared to the same spectrum on a single-beam set up.
S. Pakswer

SR

APPROVED FOR RELEASE: 06/20/2000 CIA-RDP86-00513R001032010003-1"

"APPROVED FOR RELEASE: 06/20/2000 CIA-RDP86-00513R001032010003-1

MALYSHEV, V. I.,

"Ancient Written Records from the Pechora," Chronicles of the North; Yearbook of Historical Geography, History of Geographical Discoveries and Exploration of the North, v. 2, Moscow, Geografgiz, 1957, 279 p. (Akademiya nauk SSSR. Komissiya po problemam Severa).

Editorial Board: Andreyev, A. I., Belov, M. I., Burkharov, V. F., Yerimov, A. V. (Resp. Ed.), Chernenko, M. B. (Deputy Resp. Ed.) and Shcherbakov, D. I.; Ed.: Vorontsova, A. I.; Tech. Ed : Kosheleva, S. M.; Map. Ed.: Malchevskiy, I. N.

PURPOSE: The book is intended for readers interested in the Soviet Arctic.

COVERAGE: The present volume, the second of a series of three, is a collection of 27 articles by various authors presenting an historical account of the exploration and economic development of the Soviet North. A small part of the book is devoted to Arctic areas beyond the confines of the Soviet Union. The aim of the book is to contribute to an understanding of the physical geography, cartography, ethnography, and the economy of the Soviet North through a historica survey of these factors. A large number of authors, explorers, scientists, travellers, pilots, navigators, etc., are cited.

APPROVED FOR RELEASE: 06/20/2000 CIA-RDP86-00513R001032010003-1"

"APPROVED FOR RELEASE: 06/20/2000 CIA-RDP86-00513R001032010003-1

MALYSHEV, V. I.

PRIKHOT'KO, A F

24(7) p 3 PHASE I BOOK EXPLOITATION SOV/1365

L'vov. Universytet

Materialy X Vsesoyuznogo soveshchaniya po spektroskopii. t. 1: Molekulyarnaya spektroskopiya (Papers of the 10th All-Union Conference on Spectroscopy. Vol. 1: Molecular Spectroscopy) [L'vov] Izd-vo L'vovskogo univ-ta, 1957. 499 p. 4,000 copies printed. (Series: Its: Pizychnyy zbirnyk, vyp. 3/8/)

Additional Sponsoring Agency: Akademiya nauk SSSR. Komissiya po spektroskopii. Ed.: Jazer, S.L.; Tech. Ed.: Saranyuk, T.V.; Editorial Board: Landsberg, G.S., Academician (Resp. Ed., Deceased), Neporent, B.S., Doctor of Physical and Mathematical Sciences, Fabelinskiy, I.L., Doctor of Physical and Mathematical Sciences, Fabrikant, V.A., Doctor of Physical and Mathematical Sciences, Kornitskiy, V.G., Candidate of Technical Sciences, Candidate of Physical and Mathematical Sciences, Rayskiy, S.M., Candidate of Physical and Mathematical Sciences, Klimovskiy, L.K., Candidate of Physical and Mathematical Sciences, Miliyanchuk, V.S., A. Ye., Candidate of Physical and Mathematical Sciences.

Card 1/30

Fabelinskiy, I.L. Rayleigh-line Wing and Relaxation Processes in Liquids 117

Atakhodzhaye., A.K., M.P. Vuka, and V.L. Litvinov. Two Methods for the Determination of Molecular Orientation-relaxation Time 118

Malyshev, V.I. Study of the Transmission Spectrum of a Cloud in the Infrared Range 121

Kizel', V.A., and A.F. Stepanov. Reflection of Light From the Surface of a Liquid and Its Connection With Crystallization 126

Fekar, S.I. Inapplicability of the Fermi-Dirac Distribution to Electrons of Impurity Centers in Semiconductors and Crystal Phosphors 129

Mashkevich, V.S. Optical Properties of Diamond-type Crystals 132

Card 9/30

APPROVED FOR RELEASE: 06/20/2000 CIA-RDP86-00513R001032010003-1"

"APPROVED FOR RELEASE: 06/20/2000 CIA-RDP86-00513R001032010003-1

53-2-5/9

AUTHOR: Malyshev, V.I.

TITLE: The Investigation of the Hydrogen Combination by Spectroscopical Methods (Issledovaniye vodorodnoy svyazi spektroskopicheskimi metodami)

PERIODICAL: Uspekhi Fiz. Nauk, 1957, Vol. 63, Nr 2, pp. 323 - 353 (USSR)

ABSTRACT: The present paper furnishes a survey on the most important publications by G.S. Landsberg, his students and collaborators on the study of the internal molecular interactions by spectroscopical methods. This summary, however, makes no pretension as to completeness of treatment of all problems touched and to a systematical enumeration of publications. At the outset the substance of the spectroscopical methods of the investigations of the internal molecular interactions is discussed. The present summary is arranged as follows:

1.) The hydrogen binding and its spectroscopically distinguishing marks: The hydrogen can be examined by various physical and chemical methods. The spectroscopical methods, however, have a number of advantages, because they give access to the observation of details not accessible to other methods. The

Card 1/2

APPROVED FOR RELEASE: 06/20/2000 CIA-RDP86-00513R001032010003-1"

"APPROVED FOR RELEASE: 06/20/2000 CIA-RDP86-00513R001032010003-1

The Investigation of the Hydrogen Combination by Spectroscopic Meth-

present survey [illegible] of G.S. [illegible] influence [illegible] O-H group. [illegible] kinds of solvent [illegible] vents; the investigation [illegible] the dipole moment of the molecules [illegible] vents; the molecules of [illegible] of alcohol in solvents, the molecules of [illegible] gen atom). The determination [illegible] hydrogen [illegible] tion of the influence [illegible] of the [illegible] ation of [illegible] and 45 references. [illegible]

AVAILABLE: Library of Congress.

Card 1/2

APPROVED FOR RELEASE: 06/20/2000 CIA-RDP86-00513R001032010003-1"

"APPROVED FOR RELEASE: 06/20/2000 CIA-RDP86-00513R001032010003-1

MALYSHEV V. I.

MALYSHEV, V. I.

Bocharova, A. P., Malyshev, V. I.

"Determination of the Ratio of Ionium Content to Uranium Content in Ores and Minerals" p. 35

in book Methods of Determining Radioactive Elements in Mineral Raw Materials, 1958, 68 pp

APPROVED FOR RELEASE: 06/20/2000 CIA-RDP86-00513R001032010003-1"

"APPROVED FOR RELEASE: 06/20/2000 CIA-RDP86-00513R001032010003-1

SOV/48-22-9-2[illegible]

AUTHORS: Malyshev, V. I., Murzin, V. N.

TITLE: Investigations of the Hydrogen Bond in Glycols and Catechols (Issledovaniya vodorodnoy svyazi v glikolyakh i katekholakh)

PERIODICAL: Izvestiya Akademii nauk SSSR. Seriya fizicheskaya, 1958, Vol 22, Nr 9, pp 1107 - 1108 (USSR)

ABSTRACT: The authors investigated the intra- and intermolecular hydrogen bond in a number of compounds the molecules of which contain two hydroxyl groups. These compounds were chosen in such a manner as to have different hydroxyl groups. The spectra of infrared absorption were investigated of : a) glycols: etaylene glycol, 1,3-butylene glycol, 1,4-butylene glycol, and pinacone. b) catechols: hydroquinone, resorcin, and pyrocatechin. For the sake of comparison also the spectra of chloro-etaylene hydrin, of guajacole, of o- and m-nitrophenol and of benzoin were studied. In the spectra of pure substances a wide band is found in the range of the fundamental frequency and the first harmonic which corresponds to the oscillation of the O H group. This oscillation was excited

Card 1/4

APPROVED FOR RELEASE: 06/20/2000 CIA-RDP86-00513R001032010003-1"

"APPROVED FOR RELEASE: 06/20/2000 CIA-RDP86-00513R001032010003-1

Investigations of the Hydrogen Bond in Glycols and Catechols

S/[illegible]

because of the formation of the intermolecular hydrogen binding. It became evident that the form of these bands in the range of the fundamental frequency differs from that in the range of the first harmonic. In most substances this band in the range of the first harmonic exhibits a complicated structure with two sharply marked maxima. Its relative intensity differs with different compounds. Moreover, the relative inten[illegible] is dependent upon temperature. In the range of the [illegible]-damental frequency this band exhibits only one maximum at $\nu_2 \approx 3300$ cm^{-1} which corresponds to the long-wave maximum of the band of the first harmonic. Only in re-sorcin pyrocatechin and guaiacol this band exhibits two maxima. In the spectra of the dilut d glycol-, pinacone-, and pyrocatechin solutions in CCl_4 two comparatively narrow absorption bands of the O-H group of the isolated molecul s are observed in the range of the fundamental frequency and in that of the first harmonic. The existence of two oscillation bands of the O-H group

Card 2/4

APPROVED FOR RELEASE: 06/20/2000 CIA-RDP86-00513R001032010003-1"

"APPROVED FOR RELEASE: 06/20/2000 CIA-RDP86-00513R001032010003-1

Investigations of the Hydrogen Bond in Glycols and Catechols SOV/20-22-9-26/64

indicates the presence of two configurations with a different mutual orientation of the hydroxyl groups in the molecules of these substances. The essential feature is that in the glycol group the disturbance of the O-H oscillations, contrary to all expectations, increases with increasing distance between the hydroxyl groups along the molecule chain. In catechols two bands are only found in the spectra of pyrocatechin solutions, whereas in the spectra of resorcin and of hydroquinone only one band is found. This indicates that the interaction of the hydroxyl groups, as was to be expected, takes place only in the ortho-position.

ASSOCIATION: Opticheskaya laboratoriya imeni G.S.Landsberga Fizicheskogo instituta im.P.N.Lebedeva Akademii nauk SSSR (Optical Laboratory imeni G.S.Landsberg at the Institute of Physics imeni P.N.Lebedev, AS USSR)

Card 3/4

APPROVED FOR RELEASE: 06/20/2000 CIA-RDP86-00513R001032010003-1"

"APPROVED FOR RELEASE: 06/20/2000 CIA-RDP86-00513R001032010003-1

21(0),24(0) PHASE I BOOK EXPLOITATION SOV/

Akademiya nauk SSSR. Fizicheskiy institut

Issledovaniya po eksperimental'noy i teoreticheskoy fizike; [sborni.] (Studies on Experimental and Theoretical Physics; Collection of Articles) Moscow, Izd-vo AN SSSR, 1959. 304 p. Errata slip inserted. 2,300 copies printed.

Ed.: I. L. Fabelinskiy, Doctor of Physical and Mathematical Sciences; Eds. of Publishing House: A. L. Chernyak and V. G. Berkgaut; Tech. Ed.: Yu. V. Rylina; Commission for Publishing the Collection in Memory of Grigoriya Samuilovich Landsberg: I. Ye. Tamm (Chairman), Academician; M. A. Leontovich, Academician; P. A. Bazhulin, Doctor of Physical and Mathematical Sciences; S. L. Mandel'shtam, Doctor of Physical and Mathematical Sciences; I. L. Fabelinskiy, Doctor of Physical and Mathematical Sciences; P. S. Landsberg-Baryshanskaya, Candidate of Physical and Mathematical Sciences; and G. P. Motulevich (Secretary), Candidate of Physical and Mathematical Sciences.

PURPOSE: This book is intended for physicists and researchers engaged in the study of electromagnetic radiations and their role in investigating the structure and composition of materials.

COVERAGE: The collection contains 30 articles which review investigations in spectroscopy, sonics, molecular optics, semiconductor physics, nuclear physics, and other branches of physics. The introductory chapter gives a biographical profile of G. S. Landsberg, Professor and Head of the Department of Optics of the Division of Physical Technology at Moscow University, and reviews his work in Rayleigh scattering, combat gases, spectral analysis of metals, etc. No personalities are mentioned. References accompany each article.

Bazhulin, P. A., V. I. Malyshev, and M. M. Sushchinskiy. The Work of G. S. Landsberg in the Field of Molecular Spectroscopy 17

Abramson, I. S., and A. N. Mogilevskiy. Investigation of Transformation Processes in an Activated Discharge Generator Operating Under Conditions of Low Arc Currents 27

Aleksanyan, V. T., Kh. Ye. Sterin, A. L. Liberman, I. M. Kuznetsova, M. I. Tyun'kina, and B. A. Kazanskiy. The Possibility of Establishing the Configuration of Stereoisomeric Dialkylcyclohexane on the Basis of a Combined Scattering Spectrum 43

Andreyev, N. N. Standing Sound Waves of Large Amplitude 53

Bazhulin, P. A., and A. I. Sokolovskaya. Investigation of the Relation of the Width of Combined Scattering Lines to Temperature 56

Butayeva, F. A., and V. A. Fabrikant. A Medium With Negative Absorption Coefficient 62

Vladimirskiy, V. V. Nuclear Transitions in Nonspherical Nuclei 71

Vol'kenshteyn, M. V. Optical Properties of Substances in the Vitreous State 80

Vul, B. M., V. S. Vavilov, and A. P. Shotov. The Question of Impact Ionization in Semiconductors 95

Vul'fson, K. S. New Methods of Increasing the Effectiveness of Radiation Thermocouples 100

Ginzburg, V. L., and A. P. Levanyuk. Scattering of Light Near Points of Phase Transition of the Second Type and the Critical Curie Point 104

Isakovich, M. A. Irradiation of an Elastic Wall Vibrating Under the Action of Statistically Distributed Forces 117

Levin, L. M. The Dimming of Light by a Cloud 121

Mazing, M. A., S. L. Mandel'shtam, and V. G. Koloshnikov. The Broadening and Shifting of the Spectral Lines of a Gas Discharge in Plasma 128

Malyshev, V. I., and V. N. Murzin. Investigation of the Hydrogen Bond in Substances Whose Molecules Contain Two Hydroxyl Groups 134

APPROVED FOR RELEASE: 06/20/2000 CIA-RDP86-00513R001032010003-1"

"APPROVED FOR RELEASE: 06/20/2000 CIA-RDP86-00513R001032010003-1

24(4) SOV/51-6-4-23/29

AUTHORS: Malyshev, V.I. and Rautian, S.G.

TITLE: Use of Echelettes at Large Angles of Diffraction (Ispol'zovaniye esheletta pri bol'shikh uglakh difraktsii)

PERIODICAL: Optika i Spektroskopiya, 1959, Vol 6, Nr 4, pp 550-555 (USSR)

ABSTRACT: Echelettes are normally used at small angles of diffraction φ since otherwise the intensity of the main maxima are very small. Echelette grooves have a non-symmetrical triangular form shown in Fig 1. The main maxima are strongest when specular reflection from the groove sides is employed (two "blaze" angles φ_1 and φ_2, shown in Fig 1). Normally the φ_1 angle is used corresponding to reflection from the wider wide of the groove. The angle φ_1 varies between 10 and 25°. On first sight the use of the second "blaze" angle φ_2 seems to be inconvenient because the transverse section of the beam $A\varphi_2$ is much smaller than $A\varphi_1$. A detailed analysis of the question, however, shows that the use of the angle φ_2 has certain advantages. The authors discuss the use of an echelette grating in conjunction with a monochromator. Advantages of the "blaze" angle φ_2 are dealt with theoretically and the theory is confirmed by experiments. For these experiments the authors used a

Card 1/2

APPROVED FOR RELEASE: 06/20/2000 CIA-RDP86-00513R001032010003-1"

"APPROVED FOR RELEASE: 06/20/2000 CIA-RDP86-00513R001032010003-1

SOV/51-6-4-23/29

Use of Echelettes at Large Angles of Diffraction

double-beam diffraction infrared spectrophotometer DAIKS-F1 constructed in the Optical Laboratory of FIAN (with the help of A.M. Surov). The main monochromator is assembled using the scheme described by Ebert and Fastie (Refs 5, 6). Preliminary monochromatization was produced by an instrument using LiF or KBr prisms. The complete assembly is shown in Fig 2. The grating used was an echelette GOI number 2538 with 300 lines/mm and a "blaze" angle of 18°. To check the theoretical conclusions the rotational structure of a methane band was recorded in the region 1.7 μ. Similar measurements were made on mercury lines at 1.35, 1.39, 1.53 and 1.71 μ. In all cases good agreement between theory and experiment was obtained. It was found that on using the echelette grating with the "blaze" angle φ_2 the resolving power of the apparatus could be doubled. Furthermore, the echelette could then be used in a wider range of wavelengths. The experiments carried out showed that the echelettes prepared by F.M. Gerasimov at GOI were of sufficiently high quality for their second "blaze" angle to be used. There are 3 figures and 14 references, 7 of which are Soviet, 6 English and 1 German.

SUBMITTED: April 19, 1958

Card 2/2

APPROVED FOR RELEASE: 06/20/2000 CIA-RDP86-00513R001032010003-1"

"APPROVED FOR RELEASE: 06/20/2000 CIA-RDP86-00513R001032010003-1

SOV/48-23-10-25/39

7(3), 24(7)

AUTHORS: Malyshev, V. I., Rautian, S. G.

TITLE: A Vacuum Double-beam Diffraction Spectrophotometer for the Infrared Range

PERIODICAL: Izvestiya Akademii nauk SSSR. Seriya fizicheskaya, 1959, Vol 23, Nr 10, pp 1237-1239 (USSR)

ABSTRACT: At the Opticheskaya laboratoriya im. G. S. Landsberga FIAN (Optical Laboratory imeni G. S. Landsberg of the FIAN) a spectrophotometer with high resolving power was constructed, which is described. The device consists of three main parts: The double beam condenser with the photometrical recording- and amplifying systems, the premonochromator, and the diffraction monochromator. The optical scheme of the entire device is shown by figure 1 and is discussed in detail. The condenser consists of a system of spherical (f=180 and 200 mm) and plane mirrors; the premonochromator consists of a spherical (f=300 mm) and two plane mirrors and LiF- or KBr-prisms; the diffraction monochromator consists of two spherical mirrors with f=2000 mm, one with f=50 mm, the grating, a plane mirror, and two KBr-lenses (f=540 and 700 mm). A reducer makes it possible to adjust the instrument to 11 different rotational speeds (from 5.10^{-4} to

Card 1/2

APPROVED FOR RELEASE: 06/20/2000 CIA-RDP86-00513R001032010003-1"

"APPROVED FOR RELEASE: 06/20/2000 CIA-RDP86-00513R001032010003-1

SOV/48-23-10-25/39

A [illegible] Double-Beam Diffraction Spectrophotometer for the Infrared Range

5.10^{-7} rad.sec^{-1}), the swing range is 20°. Figure 2 shows an absorption spectrum recorded by means of this instrument (CO at 4.56μ). The entire device weighs about one ton. The vacuum of 10^{-1}-10^{-2} torr is maintained by means of a pump of the type VN-2. The spectral width of the slit within the range of 1.5-5μ is 0.2-0.25 cm^{-1}. There are 2 figures and 5 references, 4 of which are Soviet.

ASSOCIATION: Opticheskaya laboratoriya im. G. S. Landsberga Fizicheskogo instituta im. P. N. Lebedeva Akademii nauk SSSR (Optical Laboratory imeni G. S. Landsberg of the Physics Institute imeni P. N. Lebedev of the Academy of Sciences, USSR)

Card 2/2

APPROVED FOR RELEASE: 06/20/2000 CIA-RDP86-00513R001032010003-1"

"APPROVED FOR RELEASE: 06/20/2000 CIA-RDP86-00513R001032010003-1

LITVINOVA, N.F.; MALYSHEV, V.I.; TUROVTSEVA, Z.M.

Determination of oxygen in sodium and in the alloy Na-K. Trudy kom.anal.khim. 10:97-102 '60. (MIRA 13:8)
(Oxygen--Analysis)
(Sodium--Oxygen content)
(Sodium-potassium alloys--Oxygen content)

APPROVED FOR RELEASE: 06/20/2000 CIA-RDP86-00513R001032010003-1"

"APPROVED FOR RELEASE: 06/20/2000 CIA-RDP86-00513R001032010003-1

VUKOLOV, Ye.A.; NEGOVSKIY, A.S.; ROSTOVTSEV, N.N.; KISEL'ROD, L.I.; MALYSHEV, V.I.; IORDANOVA, Z.A.; BOCHEK, F.I.

Melting of electrocorundum in a lined casing. Prom.energ. 15 no.3:18-19 Mr '60. (MIRA 13:6)
(Corundum)

APPROVED FOR RELEASE: 06/20/2000 CIA-RDP86-00513R001032010003-1"

"APPROVED FOR RELEASE: 06/20/2000 CIA-RDP86-00513R001032010003-1

AREF'YEV, I.M.; MALYSHEV, V.I.

Hydrogen bonds of hydrohalides. Opt.i spektr. 13 no.2:206-211 Ag '62. (MIRA 15:11)
(Hydrogen bonding) (Hydrogen halides--Spectra)

APPROVED FOR RELEASE: 06/20/2000 CIA-RDP86-00513R001032010003-1"

"APPROVED FOR RELEASE: 06/20/2000 CIA-RDP86-00513R001032010003-1

BEREZIN, I.A.; MALYSHEV, V.I.

Determination of small amounts of hydrogen and oxygen in metallic uranium. Zhur.anal.khim. 17 no.9:1101-1104 D '62. (MIRA 16:2)

(Uranium—Hydrogen content)
(Uranium—Oxygen content)

APPROVED FOR RELEASE: 06/20/2000 CIA-RDP86-00513R001032010003-1"

"APPROVED FOR RELEASE: 06/20/2000 CIA-RDP86-00513R001032010003-1

BAZHULIN, P.A.; MALYSHEV, V.I.; MARKIN, A.S.; RAKOV, A.V.; BAGDASAROV, Kh.S.

Luminescence and generation spectra of various CaF_2 crystals containing U^{+3} ions. Opt. i spektr. 16 no.3:536-538 Mr '64. (MIRA 17:4)

APPROVED FOR RELEASE: 06/20/2000 CIA-RDP86-00513R001032010003-1"

"APPROVED FOR RELEASE: 06/20/2000 CIA-RDP86-00513R001032010003-1

VVEDENSKIY, B.A., glav. red.; VUL, B.M., glav. red.; SHTEYNMAN, R.Ya., zam. glav. red.; BALDIN, A.M., red.; VONSOVSKIY, S.V., red.; GALANIN, M.D., red.; ZEL'DOV, D.V., red.; ISHLINSKIY, A.Yu., red.; KAPITSA, P.L., red.; KAPTSOV, N.A., red.; KOZODAYEV, M.S., red.; LEVICH, V.G., red.; LOYTSYANSKIY, L.G., red.; LUK'YANOV, S.Yu., red.; MALYSHEV, V.I., red.; MIGULIN, V.V., red.; REBINDER, P.A., red.; SYRKIN, Ya.K., red.; TARG, S.M., red.; TYABLIKOV, S.V., red.; FEYNBERG, Ye.L., red.; KHAYKIN, S.E., red.; SHULNIKOV, A.V., red.

[Encyclopedic physics dictionary] Fizicheskii entsiklopedicheskii slovar'. Moskva, Sovetskaia Entsiklopediia. Vol.4. 1965. 592 p. (MIRA 18:1)

APPROVED FOR RELEASE: 06/20/2000 CIA-RDP86-00513R001032010003-1"

"APPROVED FOR RELEASE: 06/20/2000 CIA-RDP86-00513R001032010003-1

L 65227-65 EWA(k)/EBD/EWT(1)/EWP(e)/EWT(m)/EEC(k)-2/EWP(i)/T/EWP(k)/EWP(b)/
EWA(m)-2/EWA(h) IJP(c) WG/WH

ACCESSION NR: AP5014241 UR/0386/65/001/003/0049/0052

AUTHOR: Malyshev, V. I.; Markin, A. S.; Petrov, V. S. 60 58 B

TITLE: Passive Q-switch in a neodymium-doped glass laser

SOURCE: Zhurnal eksperimental'noy i teoreticheskoy fiziki. Pis'ma v redaktsiyu. Prilozheniye, v. 1, no. 3, 1965, 49-52

TOPIC TAGS: laser, neodymium glass laser, liquid Q switch, photochemical shutter, giant pulse

ABSTRACT: A short description was presented of an experimental neodymium glass laser system with a liquid Q-switch to produce giant laser pulses. The active element was a neodymium glass rod, and the passive cavity Q-switching element, a polymethine dye solution in methanol. A single symmetrical pulse of 35 nsec duration and about 5-Mw peak was generated with a solution of about 40% transmittance and a generation threshold of 3000 joules. The total energy output of the pulse was about 7% of the total ordinary laser output at equal input energy. Air breakdown (spark) was observed at 5-Mw power at the focus of the lens which was located between one of the external mirrors and the recording coaxial photocell. A nonsymmetrical pulse was recorded as a result of increased absorption in the plasma formed in the discharge. Orig. art. has: 2 figures [JK]

Card 1/2

APPROVED FOR RELEASE: 06/20/2000 CIA-RDP86-00513R001032010003-1"

"APPROVED FOR RELEASE: 06/20/2000 CIA-RDP86-00513R001032010003-1

L 65227-65

ACCESSION NR: AP5014241

ASSOCIATION: Fizicheskiy institut Akademii nauk SSSR [Physical Institute, Academy of Sciences, SSSR]

SUBMITTED: 05Apr65 ENCL: 00 SUB CODE: EC

NO REF SOV: 000 OTHER: 003

Card 1/2

APPROVED FOR RELEASE: 06/20/2000 CIA-RDP86-00513R001032010003-1"

"APPROVED FOR RELEASE: 06/20/2000 CIA-RDP86-00513R001032010003-1

L 62765-65 EWA(c)/FBD/EWG(r)/EWT(d)/EWP(e)/EWT(m)/EEC(k)-2/EWP(i)/T/EEC(h)-2/EWP(k)/
EWA(m)-2/EWA(h) Pu-4/Pn-4/Po-4/Pa-4/Pf-4/Peb/Pt-4/Pl-4 IJP(c) MG/JAJ/WH

ACCESSION NR: AP5019589 UR/0386/65/001/006/0011/0014

AUTHOR: Malyshev, V. I.; Markin, A. S.; Petrov, V. S.; Levkoyev, I. I.; Vompe, A. F.

TITLE: Neodymium-glass laser with near-critical single pulses 59 38 B

SOURCE: Zhurnal eksperimental'noy i teoreticheskoy fiziki. Pis'ma v redaktsiyu. Prilozheniye, v. 1, no. 6, 1965, 11-14

TOPIC TAGS: neodymium laser, glass laser, Q switching, passive switching, pentacarbocyanine, pulsewidth control

ABSTRACT: An attempt was made to find a phototropic material which would provide switching of a neodymium-glass laser with pulsewidths near the critical. One type of pentacarbocyanines was found to give single pulses with short duration. The experimental laser consisted of a neodymium rod 120 mm in length and 12 mm in diameter. The effective length of the resonator L_{eff} was 55 cm, which consisted of two external mirrors with R_1 = 99% and R_2 = 40%. The transmission coefficient of the solution-containing tube placed between the neodymium rod and the 99% mirror for λ = 1.06 μm was 20%. Under these conditions a ~10-nanosec single pulse was obtained. With a 3000-j pumping energy the pulse power was ~50 Mw and a spark was observed at the focus of the f = 500 mm lens. An increase in L_{eff} caused a nonlinear increase

Card 1/2

APPROVED FOR RELEASE: 06/20/2000 CIA-RDP86-00513R001032010003-1"

"APPROVED FOR RELEASE: 06/20/2000 CIA-RDP86-00513R001032010003-1

L 62765-65

ACCESSION NR: AP5019589

of pulse width, and at L_{eff} = 360 cm the pulsewidth was ~530 nanosec. At L_{eff} = 55 cm, a pulsewidth of ~10 nanosec corresponded to a quintuple passage of a quantum between mirrors. The results indicate that the pulsewidth is practically critical and is determined by the L_{eff} and not by the switch. The switching time was less than 10 nanosec. A further reduction of L_{eff} and an increased initial inverse population of the metastable level will result in even shorter single pulses. Orig. art. has: 1 figure. [YK]

ASSOCIATION: Fizicheskiy institut im. P. N. Lebedeva Akademii nauk SSSR (Physics Institute, Academy of Sciences, SSSR)

SUBMITTED: 04May65 ENCL: 00 SUB CODE: EO

NO REF SOV: 004 OTHER: 003 ATD PRESS: 4056

Card 2/2

APPROVED FOR RELEASE: 06/20/2000 CIA-RDP86-00513R001032010003-1"

"APPROVED FOR RELEASE: 06/20/2000 CIA-RDP86-00513R001032010003-1

L 1382-66 EEC(k)-2/FBD/EWT(1)/EWA(k)-2/EWP(k)/EWA(m)-2/EWA(h)/T IJP(c)/SCTB
ACCESSION NR: AP5021487 WG UR/0368/65/003/002/0123/0127

AUTHOR: Belousova, I. M.; Malyshev, V. I.; Ochelenkov, V. M.

TITLE: Investigation of the spectrum of beats between the modes of a gas laser with a confocal type resonator

SOURCE: Zhurnal prikladnoy spektroskopii, v. 3, no. 2, 1965, 123-127

TOPIC TAGS: gas laser, laser radiation spectrum, laser pulsation, laser beam, cavity resonator

ABSTRACT: The beat-spectrum investigation was made for a helium-neon laser operating at 632.8 nm with a cavity made up of one spherical and one plane mirror, the latter being in the focal plane of the former. The distance between mirrors was 2 meters, the accuracy of the mirror angle adjustment about 30", and the surface finish accuracy was approximately 0.05 of a fringe. The spectrum was analyzed with an FEU-12A photomultiplier (used as a square-law detector), a broadband amplifier, and a spectrum analyzer (S4-8). Beats with frequencies 20 kcs—6.5 Mcs could be registered. The presence of beats at frequencies lower than 20 kcs could be determined from the line broadening of the initial response of the spectrum analyzer. Both polarized and unpolarized laser radiation was investigated. Beats due to in-

Card 1/2

APPROVED FOR RELEASE: 06/20/2000 CIA-RDP86-00513R001032010003-1"

"APPROVED FOR RELEASE: 06/20/2000 CIA-RDP86-00513R001032010003-1

L 1382-66

ACCESSION NR: AP5021487

terference between the fundamental and azimuthal modes were observed in the range from 0 to 1.5 Mcs. The low-frequency beats are attributed to non-ideal resonator characteristics. A large number of difference frequencies were recorded between 50 kcs and 1.5 Mcs. Variation of the mutual placement of the mirrors changes the intensity and frequency of the beats. An appreciable part of the beats decreased in intensity when unpolarized emission from the laser was applied to the photocathode. The beat intensity exhibited a strong dependence on the degree of limitation other than that produced by the laser diaphragms or the elements of the optical system. The observed dependence of the beat intensity and of their spectral composition on the degree of beam limitation is attributed to the presence of out-of-phase oscillations in the laser beam for the azimuthal oscillation mode, and to the time-variation of the interference pattern when the beam is limited in the focus of the lens. Orig. art. has: 3 figures and 2 formulas. [02]

ASSOCIATION: None

SUBMITTED: 15Oct64 ENCL: 00 SUB CODE: EC

NO REF SOV: 001 OTHER: 002 ATD PRESS: 4099

Card 2/2

APPROVED FOR RELEASE: 06/20/2000 CIA-RDP86-00513R001032010003-1"

"APPROVED FOR RELEASE: 06/20/2000 CIA-RDP86-00513R001032010003-1

L 11142-66 EWP(e)/EWT(m)/EWP(b) WH SOURCE CODE: UR/0368/65/003/005/0415/0420

ACC NR: AP6000022

AUTHOR: Malyshev, V. I.; Markin, A. S.; Petrov, V. S.

ORG: none

TITLE: Investigation of emission in extra-axial directions in cylindrical specimens of neodymium glass

SOURCE: Zhurnal prikladnoy spektroskopii, v. 3, no. 5, 1965, 415-420

TOPIC TAGS: neodymium, optic glass, solid state laser, laser emission

ABSTRACT: This paper gives the results of a systematic experimental investigation of laser emission in extra-axial directions. The specimens were cylindrical and square glass rods with semi-reflecting ends and highly polished lateral surfaces. Optically uniform neodymium glass was used. Emission on a wavelength of 1.06 μ was recorded both photoelectrically and photographically. Distribution of radiative energy on the end of the specimen takes the form of rings, with no emission in the axial modes at pumping energies slightly higher than the emission threshold value (20%). Increasing the pumping energy leads to the appearance of more rings with a different emission threshold for each of them. Emission was observed at considerable angles to the axis of the specimens (up to 70°). When the lateral surfaces of the specimens were properly finished, no axial emission was observed even when the pumping energy exceeded

UDC: 535.89

Card 1/2

APPROVED FOR RELEASE: 06/20/2000 CIA-RDP86-00513R001032010003-1"

"APPROVED FOR RELEASE: 06/20/2000 CIA-RDP86-00513R001032010003-1

L 11142-66

ACC NR: AP6000022

the emission threshold by a factor of three. The actual path of the beam within the specimen was determined by studying the distribution of radiative energy in the near and far zones. It was found that the beam follows a closed three-dimensional path within the laser. The time relationship between various points in the far zone was also studied. "In conclusion we thank P. A. Bazhulin for constant interest in this work, and S. G. Rautian for useful consultation." Orig. art. has: 2 figures and 2 formulas. [14]

SUB CODE: 20/ SUBM DATE: 23Feb65/ ORIG REF: 004/ OTH REF: 003

ATD PRESS: 4173

Card 2/2

APPROVED FOR RELEASE: 06/20/2000 CIA-RDP86-00513R001032010003-1"

"APPROVED FOR RELEASE: 06/20/2000 CIA-RDP86-00513R001032010003-1

DUDKIN, V.A.; MALYSHEV, V.I.; RAUTIAN, S.G.

Studying hydrogen bonds in the critical temperature region of some substances. Opt. i spektr. 18 no.6:984-989 Je '65. (MIRA 18:12)

APPROVED FOR RELEASE: 06/20/2000 CIA-RDP86-00513R001032010003-1"

"APPROVED FOR RELEASE: 06/20/2000 CIA-RDP86-00513R001032010003-1

L 54512-66 EWT(1)/EWT(m)/T/EWP(t)/EWP(b) IJP(c) JD

ACCESSION NR: AP5019751 UR/0051/65/019/002/0177/0180

539.196.3

AUTHOR: Dudkin, V. A.; Andreyeva, T. L.; Malyshev, V. I.; Sorokin, V. N.

TITLE: Broadening of emission lines of thallium by molecular hydrogen

SOURCE: Optika i spektroskopiya, v. 19, no. 2, 1965, 177-180

TOPIC TAGS: thallium, emission line, line broadening, hydrogen, pressure effect

ABSTRACT: The broadening of the 5350 and 3776 Å emission lines of thallium by molecular hydrogen was investigated using thallium atoms excited by photodissociation of Tl-I molecules. The procedure was to irradiate a quartz cell containing the gas by means of an external source (PRK-2 mercury lamp), and to measure the width of the excited-atom lines as a function of the pressure and of the type of gas. A diagram of the experimental setup is shown in Fig. 1 of the enclosure. The hydrogen pressures ranged from 0 to 720 mm Hg. The photodissociation was excited as a result of absorption of the 2002, 1972, and 1942 Å mercury lines by the Tl-I molecules. The Tl-atom fluorescence spectra were obtained with an ISP-28 spectrograph crossed with a Fabry-Perot etalon. The 5350 and 3776 Å line profiles were determined by photographic photometry. A linear variation of the width of both lines approximately from 0.1 to 0.75 cm^{-1} was observed on changing the hydrogen

Card 1/3

09010886

APPROVED FOR RELEASE: 06/20/2000 CIA-RDP86-00513R001032010003-1"

"APPROVED FOR RELEASE: 06/20/2000 CIA-RDP86-00513R001032010003-1

L 5451-66

ACCESSION NR: AP5019751 21

pressure from 0 to 720 mm Hg. The broadening of the cross section, due to elastic collision of the thallium atoms with the hydrogen molecules, was found to be 10^{-14} cm^2, which does not differ much from the values obtained for collisions between alkaline metals and molecular hydrogen. "We thank R. A. Bazhulin, S. G. Rautian, and I. I. Sobel'man for useful discussions and advice, and I. S. Marshak and his co-workers D. A. Goukhberg and G. N. Semenova of the Moskovskiy elektrolampovyy zavod (Moscow Electric Bulb Plant) for preparing the lamps." Orig. art. has: 2 figures and 2 formulas.

ASSOCIATION: none

SUBMITTED: 11Jun64 ENCL: 01 SUB CODE: OP, NP

NR REF SOV: 009 OTHER: 002

Card 2/3

APPROVED FOR RELEASE: 06/20/2000 CIA-RDP86-00513R001032010003-1"

"APPROVED FOR RELEASE: 06/20/2000 CIA-RDP86-00513R001032010003-1

L 5451-66
ACCESSION NR: AP5019751

ENCLOSURE: 01

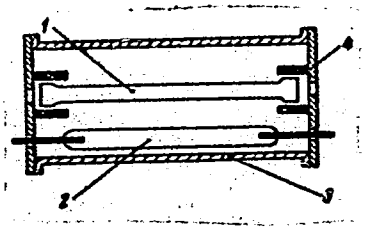

Fig. 1. Diagram of experimental setup.

1 - Cell, 2 - exciting source, 3 - housing,
4 - heated holders.

Card 3/3

APPROVED FOR RELEASE: 06/20/2000 CIA-RDP86-00513R001032010003-1"

"APPROVED FOR RELEASE: 06/20/2000 CIA-RDP86-00513R001032010003-1

[illegible]EYEVA, T. L., MALYSHEV, V. I.

Dependence of the parameters of infrared absorption [illegible] viscosity. Opt. [illegible]

APPROVED FOR RELEASE: 06/20/2000 CIA-RDP86-00513R001032010003-1"

"APPROVED FOR RELEASE: 06/20/2000 CIA-RDP86-00513R001032010003-1

L 24284-66 EWT(m)/EWP(t) IJP(c) JD

ACC NR: AP6007007 SOURCE CODE: UR/0051/66/020/002/0333/0334

AUTHOR: Andreyeva, T. L.; Dudkin, V. A.; Malyshev, V. I.; Sorokin, V. N.

ORG: none

TITLE: The excitation of thallium atoms by interaction with ammonia molecules

SOURCE: Optika i spektroskopiya, v. 20, no. 2, 1966, 333-334

TOPIC TAGS: thallium, ammonia, light emission, spectral line, light excitation, fluorescence

ABSTRACT: This is a continuation of an earlier investigation (Opt. i spektr. v. 19, 177, 1965) of the effect of impurities on the intensity and width of thallium atomic emission lines, where it was observed that addition of ammonia greatly increases the intensity of the 3519 Å line, corresponding to the $^6D_{5/2} \rightarrow {}^6P_{3/2}$ transition, without affecting the intensity of the other lines. To clarify this phenomenon further, the authors investigated the emission spectrum of atomic thallium in the presence of ammonia molecules when irradiated by a mercury lamp. The results have shown that the selective excitation of the $^6D_{5/2}$ level of thallium depends on the interaction of the excited ammonia molecule with a thallium atom, and is not related to the presence of TlI molecules. An analysis of various possible mechanisms for the selective excitation of the $^6D_{5/2}$ atomic-thallium level, aimed at explaining the observed phenomena, shows that the mechanism of sensitized fluorescence with transfer of excitation energy from the ammonia molecules to the thallium atoms comes closest to satisfying

Card 1/2

UDC: 539.196.3

APPROVED FOR RELEASE: 06/20/2000 CIA-RDP86-00513R001032010003-1"

"APPROVED FOR RELEASE: 06/20/2000 CIA-RDP86-00513R001032010003-1

L 24284-66

ACC NR: AP6007007

2

the requirement that the excited thallium atom concentration be linearly dependent on the excitation source power. Although in principal excitation processes with transfer energy from a molecule to an atom are possible, none have been observed as yet. The authors therefore suggest also a one-quantum process which could lead to the formation of excited thallium atoms, namely photodissociation of the hydride molecule $TlH(Tl + h\nu \rightarrow Tl^* + H)_3$ and of the quasi-molecule $TlNH_3$ which results from the chemical interaction of thallium with hydrogen or with ammonia respectively. Although the observed decrease in the amount of ammonia in the thallium cell under irradiation by a mercury lamp may indicate that a chemical interaction occurs between the thallium atoms and the ammonia molecules, the experiments show that the same occurs for pure ammonia. It is therefore deduced that the experiments confirm the hypothesis that the principal atomic excitation is due in this case to sensitized fluorescence, with transfer of excitation from the ammonia molecule to the thallium atom. The authors thank P. A. Bazhulin for discussing the results and A. N. Terenin for valuable suggestions. Orig. art. has: 1 figure and 1 formula.

SUB CODE: 20/ SUBM DATE: 10Apr65/ ORIG REF: 003/ OTH REF: 002

Card 2/2

APPROVED FOR RELEASE: 06/20/2000 CIA-RDP86-00513R001032010003-1"

"APPROVED FOR RELEASE: 06/20/2000 CIA-RDP86-00513R001032010003-1

L 23361-66 EWT(m)/EWP(t) IJP(c) JD/JG

ACC NR: AP6008698 SOURCE CODE: UR/0075/65/020/011/1214/1218

AUTHOR: Malyshev, V. I.; Turovtseva, Z. M. (Deceased); Litvinova, N. F.

ORG: none

56
B

TITLE: Determination of hydrogen in lithium

SOURCE: Zhurnal analiticheskoy khimii, v. 20, no. 11, 1965, 1214-1218

TOPIC TAGS: hydrogen, lithium, gas analysis, metal analysis

ABSTRACT: A method for determining hydrogen in metallic lithium, involving vacuum fusion and analysis of the hydrogen evolved, is described. The forms in which hydrogen is present in lithium (hydroxide, hydride, absorbed hydrogen) are discussed on the basis of earlier studies. Special experiments with known amounts of LiOH and LiH showed the complete evolution of hydrogen under the conditions employed. A technique was worked out for taking lithium samples and charging them into the analytical apparatus without allowing them to come in contact with the atmosphere, thus avoiding surface contamination. The design of the molybdenum crucible employed also excludes the air. Analysis conditions provided for a complete evolution of hydrogen from lithium independent of the type of compound formed by hydrogen with the metal. The sensitivity of the method is 0.01%. Orig. art. has: 1 figure, 1 table.

SUB CODE: 07,11/ SUBM DATE: 27Jun64/ ORIG REF: 001/ OTH REF: 003

UDC: 543.70

Card 1/1 SC

APPROVED FOR RELEASE: 06/20/2000 CIA-RDP86-00513R001032010003-1"

"APPROVED FOR RELEASE: 06/20/2000 CIA-RDP86-00513R001032010003-1

TUROVTSEVA, Z.M. [deceased]; MALYSHEV, V.I.; MOSKOV, A.S.

Determination of nitrogen and oxygen in UF_6. Zhur. prikl. khim. 20 no.12:1353-1358 '65. (MIR 18:12)

1. Submitted April 21, 1964.

APPROVED FOR RELEASE: 06/20/2000 CIA-RDP86-00513R001032010003-1"

"APPROVED FOR RELEASE: 06/20/2000 CIA-RDP86-00513R001032010003-1

L 9497-66 EWA(k)/FBD/EWT(1)/EEC(k)-2/T/EWP(k)/EWA(m)-2/EWA(h) SCTB/IJP(c) WG

ACC NR: AP6000193 SOURCE CODE: UR/0056/65/049/005/1408/1410

AUTHOR: Andreyeva, T. L.; Dudkin, V. A.; Malyshev, V. I.; Mikhaylov, G. V.; Sorokin, V. N.; Novikova, L. A.

ORG: Physics Institute im. P. N. Lebedev, Academy of Sciences, SSSR (Fizicheskiy institut Akademii nauk SSSR)

TITLE: Photodissociation laser

SOURCE: Zhurnal eksperimental'noy i teoreticheskoy fiziki, v. 49, no. 5, 1965, 1408-1410

TOPIC TAGS: laser, gaseous state laser, photodissociation

ABSTRACT: The authors investigated the dependence of the oscillation threshold and the pulsed energy output of a photodissociation laser based on CH_3I or CF_3I (recently fabricated by J. V. V. Kasper and G. C. Pimental [Applied physics letters, v. 5, no. 11, 1964, p. 231]) on the pressure of the gaseous CH_3I or CF_3I. In the first series of experiments, the authors used a 50-cm-long argon-filled flash tube with a 50-μf capacitor bank (voltage 2—10 kw). A 60-cm-long quartz tube with a 7-mm inner diameter equipped with Brewster-angle windows was used as the laser tube. The flash tube and the adjacent laser tube were wrapped in aluminum foil. A confocal cavity formed by two concave gold-surfaced mirrors (radius 1 m) was used in the experiments. The output energy of the CF_3I laser pulse was observed to reach a peak at a pressure

Card 1/2

APPROVED FOR RELEASE: 06/20/2000 CIA-RDP86-00513R001032010003-1"

"APPROVED FOR RELEASE: 06/20/2000 CIA-RDP86-00513R001032010003-1

L 9497-66

ACC NR: AP6000193 0

of 80—100 torr. At this pressure and at a pump power of 1600 j, the average output energy of the CF_3I laser was 10^{-2} j and the peak power, approximately 1 kw. Up to a pump energy of 1600 j, the output energy was a linear function of the pump energy. In another series of experiments with an elliptical lamp, dielectric coated mirrors, and an effective cell and lamp length of 250 mm, the threshold for oscillation decreased by more than a factor of two. For the CF_3I laser, the threshold reached a minimum at about 80 j at a pressure of 10—20 torr. In the case of the CH_3I laser, the threshold was at a minimum at a pressure of less than 1 torr. From the standpoint of high power output CF_3I appears to be more promising than CH_3I since higher power output is obtained at higher pressure. Orig. art. has: 3 figures. [CS]

SUB CODE: 20/ SUBM DATE: 02Jun65/ ORIG REF: 003/ OTH REF: 003/ ATD PRESS: 4162

Card 2/2

APPROVED FOR RELEASE: 06/20/2000 CIA-RDP86-00513R001032010003-1"

"APPROVED FOR RELEASE: 06/20/2000 CIA-RDP86-00513R001032010003-1

L 31505-66 EWT(m)/EWP(t)/ETI IJP(c) JD
ACC NR: AP6013017 SOURCE CODE: UR/0051/66/020/004/0554/0560

AUTHOR: Dudkin, V. A.; Malyshev, V. I.; Sorokin, V. N.

ORG: none

64
62
B

TITLE: Investigation of the influence of extraneous impurities on the concentration of thallium atoms in the metastable state

SOURCE: Optika i spektroskopiya, v. 20, no. 4, 1966, 554-560

TOPIC TAGS: thallium, metastable state, crystal impurity, collision cross section, inelastic scattering, ATOM, ABSORPTION COEFFICIENT

ABSTRACT: The authors have investigated experimentally the influence of different impurities on the concentration of thallium atoms in a metastable state $6P_{3/2}$. These atoms were obtained by photodissociation of TlI molecules, making it possible to vary extensively the nature of the extraneous gases and their pressure. The impurities were molecular hydrogen, oxygen, and ammonia at different pressures. The concentration of the metastable atoms was determined by measuring the integral coefficient of absorption of the Tl atoms produced during the photodissociation. The photodissociation was produced in TlI vapor at a temperature 460C and a pressure 2-3 Torr by the absorption of ultraviolet from a mercury lamp. Light from a

Card 1/2 UDC: 539.186.3: 546.683

APPROVED FOR RELEASE: 06/20/2000 CIA-RDP86-00513R001032010003-1"

"APPROVED FOR RELEASE: 06/20/2000 CIA-RDP86-00513R001032010003-1

L 31505-66 2
ACC NR: AP6013017

thallium lamp, together with thallium emission from the Tl atoms in TlI vapor, was incident on a monochromator slit, and measured with a photoelectric attachement (FEP-1). The widths and shapes of the spectral lines were measured by photographing the spectra obtained with the aid of a Fabry-Perot interferometer, using an ordinary photometry technique. The data reduction procedure is described. The results show that the concentration of the metastable Tl atoms decreases with increasing pressure of the extraneous gas. Ammonia and oxygen decreased the concentration of the Tl atoms at the metastable level with approximately equal efficiency, whereas the hydrogen was much less effective. The measurements yield for the cross sections for ine stic collisions values of the order of 10^{-16} cm^2 for ammonia and oxygen, and 10^{-18}-10^{-19} cm^2 for hydrogen. The authors thank the late P. A. Bazhulin and S. G. Rautian for continuous interest in the work and valuable advice. Orig. art. has: 3 figures, 8 formulas, and 1 table.

SUB CODE: 20/ SUBM DATE: 27Nov64/ ORIG REF: 004

Card 2/2 mc

APPROVED FOR RELEASE: 06/20/2000 CIA-RDP86-00513R001032010003-1"

"APPROVED FOR RELEASE: 06/20/2000 CIA-RDP86-00513R001032010003-1

L 36825-66 EWT(m)/EWP(t)/ETI IJP(c) ES/WW/JW/JD/JG

ACC NR: AP6014143 SOURCE CODE: UR/0075/65/020/012/1353/1358

AUTHOR: Turovtseva, Z. M. (Deceased); Malyshev, V. I.; Moskov, A. S.

ORG: none

TITLE: Determination of nitrogen and oxygen in uranium hexafluoride

SOURCE: Zhurnal analiticheskoy khimii, v. 20, no. 12, 1966, 1353-1358

TOPIC TAGS: quantitative analysis, oxygen, nitrogen, uranium compound, fluoride

ABSTRACT: The method described is based on measurement of the intensity of the nitrogen bands λ = 4278 Å or λ = 4236 Å and the oxygen line λ =7772 Å under special discharge conditions in an enriched mixture of air with UF_6. The concentrations of nitrogen and oxygen are determined by a nomograph obtained with the use of specially prepared standard solutions. The article contains detailed schematic diagrams of the apparatus used. It then proceeds to a description of a photoelectrical method for determination of the amount of air in UF_6. The sensitivity of the method is approximately the same as that of the photographic method. Orig. art. has: 6 figures.

SUB CODE: 07/ SUBM DATE: 21Apr64/ OTH REF: 001

Card 1/1

UDC: 543.70

APPROVED FOR RELEASE: 06/20/2000 CIA-RDP86-00513R001032010003-1"

"APPROVED FOR RELEASE: 06/20/2000 CIA-RDP86-00513R001032010003-1

LITVINOVA, N.F.; MALYSHEV, V.I.

Spectral determination of boron in metallic calcium and calcium oxide. Zhur. anal. khim. 21 no. 1:83-86 '66 (MIRA 19:1)

1. Institut geokhimii i analiticheskoy khimii imeni Vernadskogo AN SSSR, Moskva.

APPROVED FOR RELEASE: 06/20/2000 CIA-RDP86-00513R001032010003-1"

"APPROVED FOR RELEASE: 06/20/2000 CIA-RDP86-00513R001032010003-1

ACC NR: AP6007213 SOURCE CODE: UR/0056/66/050/002/0339/0342

AUTHOR: Malyshev, V. I.; Markin, A. S.

ORG: Physics Institute im. P. N. Lebedev, Academy of Sciences SSSR (Fizicheskiy institut Akademii nauk SSSR)

TITLE: Discrimination of axial oscillation modes in a laser with external mirrors

SOURCE: Zhurnal eksperimental'noy i teoreticheskoy fiziki, v. 50, no. 2, 1966, 339-342

TOPIC TAGS: laser modulation, laser radiation, resonator, neodymium glass

ABSTRACT: The purpose of the investigation was to observe beats produced in a neodymium-glass laser by interference between axial modes, and to investigate the dependence of the beat frequency and the resultant modulation on the distance between the mirrors and on the location of the neodymium-glass rod inside the laser cavity. A laser with external mirrors having reflection coefficients of 98 and 65%, respectively, was used. The neodymium-glass rod was 12 mm in diameter and 120 mm long. The Q switching was by means of a bleaching filter, described by the authors earlier (Pis'ma ZhETF v. 1, no. 3, 49, 1965), installed near one of the mirrors. The laser emission was recorded with a coaxial photocell connected directly to the deflecting plates of an oscilloscope. The optical length of the resonator could be varied between 40 and 320 cm. As the length was increased from 40 to ~150 cm, the duration of the giant pulse increased from 25 to 80 nsec, and the waveform of the pulse remained smooth. At greater lengths a regular structure appeared on the waveform, with a period 2L/c (L -

Card 1/2

APPROVED FOR RELEASE: 06/20/2000 CIA-RDP86-00513R001032010003-1"

"APPROVED FOR RELEASE: 06/20/2000 CIA-RDP86-00513R001032010003-1

L 20195-66

ACC NR: AP6007213

4

resonator length, c - velocity of light). The structure and its depth of modulation were unstable from pulse to pulse if the entire output of the rod struck the photocell, but the use of a diaphragm increased both the stability and the depth of modulation. The beats are shown to be connected with the existence of isolated generation regions in different parts of the rod cross section, and the diaphragm is shown to decrease the contribution of the nonaxial modes to the radiation incident on the photocell. When the neodymium-glass rod is moved along the resonator (whose length is kept constant at 320 cm) the modulation frequency also changes, but this change occurs abruptly at a certain distance between the center of the rod to the mirror. It is shown that this behavior can be explained by regarding the resonator + rod system as a compound waveguide and calculating the change in the parameters of this compund waveguide resulting from displacement of the rod. A similar discrimination is observed also when the laser was operated without Q switching, in the usual spike mode, but the depth of modulation is smaller. "The authors thank P. A. Bazhulin for interest, T. I. Kuznetsova and S. G. Rautian for discussions, and Yu. S. Ivanov for help with the experiments." Orig. art. has: 2 figures and 1 table." [02]

SUB CODE: 20/ SUBM DATE: 03Aug65/ ORIG REF: 004/ OTH REF: 004/ ATD PRESS: 4214

Card 2/2 MJS

APPROVED FOR RELEASE: 06/20/2000 CIA-RDP86-00513R001032010003-1"

"APPROVED FOR RELEASE: 06/20/2000 CIA-RDP86-00513R001032010003-1

L 32006-66 FBD/EWT(1)/EEC(k)-2/T/EWP(k) LIP(c) WG

ACC NR: AP6020198 SOURCE CODE: UR/0056/66/050/006/1458/1463

AUTHOR: Malyshev, V. I.; Markin, A. S.

ORG: Physics Institute im. P. N. Lebedev, AN SSSR (Fizicheskiy institut AN SSSR)

65
64
B

TITLE: Investigation of the dependence of duration and form of a giant pulse on the coefficient of inversion population

SOURCE: Zh eksper i teor fiz, v. 50, no. 6, 1966, 1458-1463

TOPIC TAGS: laser pulsation, nanosecond pulse, pulse duration modulation, pulse shape

ABSTRACT: The possibility of an experimental quantitative verification of the theory of giant pulse formation was investigated. Lasers with neodymium glass rods of different sizes were used in the experiment. A solution of polymethine coloring material in nitrobenzene was used as a passive Q-switch. By changing the concentration of this substance the transmission coefficient of the solution was varied from 0.35 to 0.98. The duration and shape of giant pulses were measured for various values of population inversion, and the results were compared with the theoretical predictions. The experiment showed a good agreement between the values of the giant pulse duration, calculated theoretically and obtained experimentally in a range of N_i/N_p from 1.8 up to 4.5 (N_i is the density of population inversion. When Q is restored, N_p is the density of population inversion when the pulse reaches

Card 1/2

APPROVED FOR RELEASE: 06/20/2000 CIA-RDP86-00513R001032010003-1"

"APPROVED FOR RELEASE: 06/20/2000 CIA-RDP86-00513R001032010003-1

L 39006-66

ACC NR: AP6020198

maximum), i.e., for the range which is of the greatest interest from the point of view of obtaining short pulses with high peak intensity. In the range of smaller values of N_i/N_p, from 1.1 to 1.8, the experimental values differ from theoretical by a magnitude larger than the possible experimental error. Going to the range of $N_i/N_p < 1.4$ simultaneously with the deviation of experimental values of pulse duration from the values predicted by theory, the form of the giant pulse changes also. The authors thank Yu. S. Ivanov for his help in performing the experiment. Orig. art. has: 4 figures, 4 formulas, and 2 tables.

[JA]

SUB CODE: 20/ SUBM DATE: 13Dec65/ ORIG REF: 004/ OTH REF: 004/ ATD PRESS: 5021

Card 2/2

APPROVED FOR RELEASE: 06/20/2000 CIA-RDP86-00513R001032010003-1"

"APPROVED FOR RELEASE: 06/20/2000 CIA-RDP86-00513R001032010003-1

AUTHOR: Barantseva, O. D. (Taganrog); Malyshev, V. A. (Taganrog)

ORG: none

SOURCE CODE: UR/0407/66/000/001/0043/0050

TITLE: Study of the surface ionization of dielectrics by determination of the conditions for ignition of the discharge

SOURCE: Elektronnaya obrabotka materialov, no. 1, 1966, 43-50

TOPIC TAGS: dielectric property, surface ionization, ignition point, electric discharge

ABSTRACT: The article presents an approximate calculation of the conditions for ignition of a discharge and an experimental application of the theory of ignition in the presence and in the absence of an external ionizer. According to Townsend, the breakdown condition is described by the equality

$$\gamma(e^{\alpha d} - 1) = 1, \qquad (1)$$

where α and γ are the first and third Townsend coefficients, determined by the relationships:

$$\alpha = \frac{p}{\lambda_1} e^{\frac{V_{i\alpha} pd}{U\lambda_1}}, \qquad (2)$$

$$\gamma = k_i \frac{U\lambda_1}{pd}, \qquad (3)$$

Card 1/2

APPROVED FOR RELEASE: 06/20/2000 CIA-RDP86-00513R001032010003-1"

"APPROVED FOR RELEASE: 06/20/2000 CIA-RDP86-00513R001032010003-1

ACC NR: AP6034764

in which ε is the charge on an electron; k is a coefficient depending on the material and the condition of the surface layer of electrons and on the nature of the ions coming from the electrode; V_i is the ionization potential of the gas; λ_i is the length of the free flight path of a molecule of the gas; U_{ig} is the ignition potential of the discharge; d is the distance between electrodes; p is the pressure of the gas. Experimental data on surface ionization are compared satisfactorily with values claculated on the bases of the above theoretical considerations. Orig. art. has: 23 formulas and 5 figures.

SUB CODE: 09,20/ SUBM DATE: none/ ORIG REF: 010

Card 2/2

APPROVED FOR RELEASE: 06/20/2000 CIA-RDP86-00513R001032010003-1"

"APPROVED FOR RELEASE: 06/20/2000 CIA-RDP86-00513R001032010003-1

CHERDYNTSEV, V.V.; MALYSHEV, V.I.; KAZACHEVSKIY, I.V.; BORISOV, I.V.

Isotopic composition of uranium and thorium in the zone of supergenesis. Studies of the peat bog matter. Geokhimiia no.5:399-403 My '64. (MIRA 18:7)

1. Geological Institute of the Academy of Sciences, U.S.S.R., Moscow.

APPROVED FOR RELEASE: 06/20/2000 CIA-RDP86-00513R001032010003-1"

"APPROVED FOR RELEASE: 06/20/2000 CIA-RDP86-00513R001032010003-1

L 22261-66

ACC NR: AR6005173 SOURCE CODE: UR/0058/65/000/009/A018/A018

AUTHORS: Aref'yev, I. M.; Malyshev, V. I.; Rautian, S. G.

30
B

TITLE: Vacuum spectrometer for the far infrared

10

SOURCE: Ref. zh. Fizika, Abs. 9A146

REF. SOURCE: Tr. Komis. po spektroskopii. AN SSSR, t. 2, vyp. 1, 1964, 650-655

TOPIC TAGS: ir spectrometer, vacuum, diffraction grating

TRANSLATION: A vacuum long-wave ir spectrometer is described, for the region 60 - 1000μ with four interchangeable echelettes with d = 0.25, 0.5, 1.2 mm, measuring 300 x 300 mm.

SUB CODE: 20

Card 1/1 nst

APPROVED FOR RELEASE: 06/20/2000 CIA-RDP86-00513R001032010003-1"

"APPROVED FOR RELEASE: 06/20/2000 CIA-RDP86-00513R001032010003-1

MALYSHEV, V. M.

MALYSHEV, V. M.: "The nerves of the pharynx and larynx of cattle" (Anatomic research). Leningrad, 1955. Min Higher Education USSR, Leningrad Veterinary Inst. (Dissertation for the Degree of Candidate of Science of Biological Sciences)

SO: Knizhnaya Letopis', No. 41, 8 Oct 55

APPROVED FOR RELEASE: 06/20/2000 CIA-RDP86-00513R001032010003-1"

"APPROVED FOR RELEASE: 06/20/2000 CIA-RDP86-00513R001032010003-1

MALYSHEV, V.M.

Removal of a nddele from the extrapleural cavity. Khirurgiia no.8: 77 Ag. '55.
(MLRA 9:2)

1. Iz Kiselikhinskogo tuberkuleznogo gospitalya invalidov Otechestvennoy voyny.
(PLEURA--FOREIGN BODIES)

APPROVED FOR RELEASE: 06/20/2000 CIA-RDP86-00513R001032010003-1"

"APPROVED FOR RELEASE: 06/20/2000 CIA-RDP86-00513R001032010003-1

MALYSHEV, V.M.

124-11-12444

Translation from: Referativnyy Zhurnal, Mekhanika, 1957, Nr 11, p 17 (USSR)

AUTHOR: Malyshev, V. M.

TITLE: The Pitch Control of the Working Blades of a Variable-pitch Turbine During a Runaway Condition (Razvorot rabochikh lopastey povorotno-lopastnoy turbiny v usloviyakh razgona)

PERIODICAL: Sb: Gidroturbostroyeniye, Nr 1, Moscow-Leningrad, Mashgiz, 1955, pp 292-310.

ABSTRACT: A theoretical evaluation of the influence of the pitch control of the working blades of a hydraulic turbine on the runaway speed of the runner, in an attempt to find means for the protection of turbines against a runaway condition resulting from a failure of the governor. The runaway process of a hydraulic turbine is investigated in conditions of varying blade pitch. The study (which does not take into account any water-hammer phenomena) results in the establishment of non-linear differential equations which describe the motion of the runner of a variable-pitch turbine in conditions of a constant head and a constant gate opening, when the turbine is running away because of a breakdown of the actuator coupling. It is shown that the pitch

Card 1/2

APPROVED FOR RELEASE: 06/20/2000 CIA-RDP86-00513R001032010003-1"

"APPROVED FOR RELEASE: 06/20/2000 CIA-RDP86-00513R001032010003-1

124-11-12444

The Pitch Control of the Working Blades of a Variable-pitch Turbine During a Runaway Condition. (continued)

control of the working blades in the sense of opening, all other conditions being equal, requires a smaller effort from the servomechanism than in the sense of closing, and that it also requires a shorter time.

The equations afford a means, on the basis of static model tests and the given parameters of the full-scale turbine in any given specific case, of determining the law of variation of the blade pitch and the dependence of the number of revolutions of the turbine with time.

M. F. Zhukov

Card 2/2

APPROVED FOR RELEASE: 06/20/2000 CIA-RDP86-00513R001032010003-1"

"APPROVED FOR RELEASE: 06/20/2000 CIA-RDP86-00513R001032010003-1

SOV/124-58-4-4777

Translation from: Referativnyy zhurnal Mekhanika 1958 Nr 4 p 155 (USSR)

AUTHORS: Malyshev, V.M., Mikheyev, V.I.

TITLE: On the Stress Analysis of the Metallic Spiral Housing of a Water Turbine (O raschete na prochnost' metallicheskoy spiral'noy kamery gidroturbiny)

PERIODICAL: V sb.: Gidroturbostroyeniye. Vol 4. Moscow Leningrad, Mashgiz, 1957, pp 211-232

ABSTRACT: The axisymmetrical stress and strain condition of a thin walled container is investigated. The container consists of an annular torus-shaped shell of revolution connected to two truncated-cone shells. The inner edges of the container (the edges of the conical shells) are rigidly clamped. The calculation was carried out according to the theory of thin-walled shells of revolution, with the flexure of the generatrix taken into consideration. When determining the integration constants for the homogeneous differential equation of a conical shell, the reciprocal influence of its edges is ignored. The differential equation representing the torus-shaped shell is reduced to the Bessel equation by means of simplifications. A particular case is

Card 1/2

APPROVED FOR RELEASE: 06/20/2000 CIA-RDP86-00513R001032010003-1"

"APPROVED FOR RELEASE: 06/20/2000 CIA-RDP86-00513R001032010003-1

On the Stress Analysis of the Metallic (cont.) SOV/124-58 4 4777

studied when the conical shells are absent and the edges of the torus are clamped directly. Condition (14) representing the independence of the inte gration constants of the conical-shell equation used by the authors for the calculation of the truncated cone is only true for a non truncated cone a fact which substantially reduces the field of application of the solution obtained.

1. Turbines--Stresses 2. Stress analysis 3. Conical shell [illegible]

A D Pospelov

Card 2/2

APPROVED FOR RELEASE: 06/20/2000 CIA-RDP86-00513R001032010003-1"

"APPROVED FOR RELEASE: 06/20/2000 CIA-RDP86-00513R001032010003-1

MALYSHEV, V.M., inzh.

Some results of the testing of the semiuniflow unit of the Kama Hydroelectric Power Plant during accelerating. Energomashinostroenie 7 no.9:1-5 S '61. (MIRA 14:9)
(Kama Hydroelectric Power Station—Turbines—Testing)

APPROVED FOR RELEASE: 06/20/2000 CIA-RDP86-00513R001032010003-1"

"APPROVED FOR RELEASE: 06/20/2000 CIA-RDP86-00513R001032010003-1

MALYSHEV, V.M., inzh.

Reply to I.I. Shriro's remarks. Energomashinostroenie 8 no.10:45 O '62. (MIRA 15:11)
(Kama Hydroelectric Power Station--Turbines--Testing)

APPROVED FOR RELEASE: 06/20/2000 CIA-RDP86-00513R001032010003-1"

"APPROVED FOR RELEASE: 06/20/2000 CIA-RDP86-00513R001032010003-1

MALYSHEV, V.M., inzh.

Determination of the turning force of rotor blades in the presence of decelarative braking. Energomashinostroenie 8 no.11:17-20 N '62. (MIRA 16:1)

(Hydraulic turbines)

APPROVED FOR RELEASE: 06/20/2000 CIA-RDP86-00513R001032010003-1"

"APPROVED FOR RELEASE: 06/20/2000 CIA-RDP86-00513R001032010003-1

VOROB'YEV, I.T.; MALYSHEV, V.M.

Testing experimental specimens of the IAMZ gearboxes. Avt.prom. 28 no.8:28-29 Ag '62. (MIRA 16:3)

1. Yaroslavskiy motornyy zavod.
(Motor vehicles—Transmission devices)

APPROVED FOR RELEASE: 06/20/2000 CIA-RDP86-00513R001032010003-1"

"APPROVED FOR RELEASE: 06/20/2000 CIA-RDP86-00513R001032010003-1

ZAKRZHEVSKIY, Ye.B., polkovnik meditsinskoy sluzhby, prof.; MALYSHEV, V.M., podpolkovnik meditsinskoy sluzhby, kand. med. nauk

Clinical aspects of chronic exposure of the human organism to ultrahigh frequency electromagnetic fields; a review of literature. Voen-med.zhur., no.10:15-19 '64. (MIRA 18:5)

APPROVED FOR RELEASE: 06/20/2000 CIA-RDP86-00513R001032010003-1"

"APPROVED FOR RELEASE: 06/20/2000 CIA-RDP86-00513R001032010003-1

ARONSON, A.Ya., kand. tekhn. nauk; BUGOV, A.U., kand. tekhn nauk; MALYSHEV, V.M., kand. tekhn. nauk; SKRYLEV, I.A., inzh.; FRANK-KAMENETSKIY, G.Kh., kand. tekhn. nauk; POSTOYEV, V.S., kand. tekhn. nauk, retsenzent; ORGO, V.M., kand. tekhn. nauk, red.

[Strength calculation of the parts of hydraulic turbines] Raschet na prochnost' detalei gidroturbin. Moskva, Mashinostroenie, 1965. 391 p. (MIRA 18:10)

APPROVED FOR RELEASE: 06/20/2000 CIA-RDP86-00513R001032010003-1"

"APPROVED FOR RELEASE: 06/20/2000 CIA-RDP86-00513R001032010003-1

ANOSOV, F.V., inzh.; KUZMINSKIY, S.S., inzh.; MALYSHEV, V.M., kand.tekhn.nauk

Research on the construction of hydraulic turbines at the Leningrad Metalworking Plant (22d Congress of the CPSU). Energomashinostroenie 11 no.3:3-8 Mr '65. (MIRA 18:6)

APPROVED FOR RELEASE: 06/20/2000 CIA-RDP86-00513R001032010003-1"

"APPROVED FOR RELEASE: 06/20/2000 CIA-RDP86-00513R001032010003-1

PETRICHENKO,A.M.; ZAYATS,A.A.; MALYSHEV,V.N.

New instrument designed for measuring the compactness of casting molds. Zav.lab.21 no.7:869-870 '55. (MLRA 8:10)

1. Khar'kovskiy avtomobil'nodorozhnyy institut
(Measuring instruments)

APPROVED FOR RELEASE: 06/20/2000 CIA-RDP86-00513R001032010003-1"

"APPROVED FOR RELEASE: 06/20/2000 CIA-RDP86-00513R001032010003-1

S/181/60/002/01/20/035
B008/B014

24.7500

AUTHORS: Makarov, L. L., Lur'ye, B. G., Malyshev, V. N.

TITLE: Examination of the Densities of Mixed KCl-RbCl Crystals and of the Diffusion of Rubidium Ions Therein

PERIODICAL: Fizika tverdogo tela, 1960, Vol. 2, No. 1, pp. 88-92

TEXT: The authors examined the densities of mixed KCl-RbCl crystals at 25°C and determined their concentration of vacancies according to Shottki (Table 1). Fig. 1 represents the dependence of the degree of occupation of the elementary lattice n upon the composition. The difference between the results obtained by the authors and M. S. Ivankina (Ref. 7) is probably due to the different preparation of the samples. The configuration component of the entropy change in the development of mixed KCl-RbCl crystals was calculated with regard to the vacancies (Table 2). The results obtained are in agreement with experimental data. Next, the authors studied the diffusion of Rb^+ ions at 670°C by means of the radioisotope R^{86}. The results of diffusion measurement are given in Table 3. An analogy

Card 1/3

APPROVED FOR RELEASE: 06/20/2000 CIA-RDP86-00513R001032010003-1"

"APPROVED FOR RELEASE: 06/20/2000 CIA-RDP86-00513R001032010003-1

Examination of the Densities of Mixed KCl-RbCl Crystals and of the Diffusion of Rubidium Ions Therein

S/181/60/002/01/20/035
B008/B014

was found between the melting-point curves, the "outflow", the diffusion coefficients D, and the defectiveness of the mixed crystals. The temperature dependence of the diffusion coefficients was studied on three samples (KCl, RbCl, and an equimolecular mixed crystal) (cf. Table 4). The results obtained are represented as a function $\log D = f\left(\frac{1}{T}\right)$ in Fig. 3. The three straight lines run parallel within the experimental limit of error. This indicates that the diffusion process in the preparations under consideration requires the same activation energy. Calculations have shown that it amounts to 35000 ± 300 cal/mole. This may be explained by the fact that the binding energy between the K^+ (or Rb^+) ions and the Cl^- anion is virtually equal in crystals of any composition. The authors refer to N. S. Kurnakov's papers. The X-ray structural analysis was carried out by Ye. V. Stroganov and Engineer I. Kozhina. The authors thank Professor A. N. Murin for his helpful advice. There are 3 figures, 4 tables, and 12 references, 5 of which are Soviet.

Card 2/3

APPROVED FOR RELEASE: 06/20/2000 CIA-RDP86-00513R001032010003-1"

"APPROVED FOR RELEASE: 06/20/2000 CIA-RDP86-00513R001032010003-1

Examination of the Densities of Mixed KCl-RbCl Crystals and of the Diffusion of Rubidium Ions Therein

S/181/60/002/01/20/035
B008/B014

ASSOCIATION: Leningradskiy gosudarstvennyy universitet (Leningrad State University)

SUBMITTED: April 9, 1959

Card 3/3

APPROVED FOR RELEASE: 06/20/2000 CIA-RDP86-00513R001032010003-1"

"APPROVED FOR RELEASE: 06/20/2000 CIA-RDP86-00513R001032010003-1

MALYSHEV, V.N.; SHUL'TS, M.M.; MAKAROV, [illegible]

Equilibrium of anomalous mixed crystals. Zhur. fiz. khim. 39 no.6:1504-1507 Je '65. (MIRA 18:11)

1. Leningradskiy gosudarstvennyy universitet imeni Zhdanova. Submitted March 21, 1964.

APPROVED FOR RELEASE: 06/20/2000 CIA-RDP86-00513R001032010003-1"

"APPROVED FOR RELEASE: 06/20/2000 CIA-RDP86-00513R001032010003-1

[illegible], I.I.; [illegible]YSHEV, V.N.

Coefficients of activities of components in the system $NH_4Cl - CoCl_2 - H_2O$ at 50 and 60°C. Zhur.fiz.khim. 39 no.[illegible]2766-2768 N '65. ([illegible])

[illegible] Leningradskiy gosudarstvennyy universitet [illegible] [illegible]danova.

APPROVED FOR RELEASE: 06/20/2000 CIA-RDP86-00513R001032010003-1"

"APPROVED FOR RELEASE: 06/20/2000 CIA-RDP86-00513R001032010003-1

ACC NR: AP7002982 SOURCE CODE: UR/0413/66/000/024/0080/0080

INVENTOR: Gorchakov, G. M.; Malyshev, V. N.

ORG: None

TITLE: A thermocouple. Class 42, No. 189606

SOURCE: Izobreteniya, promyshlennyye obraztsy, tovarnyye znaki, no. 24, 1966, 80

TOPIC TAGS: thermocouple, alternating magnetic field, temperature measurement

ABSTRACT: This Author's Certificate introduces a thermocouple for measuring temperature in a high-frequency magnetic field. The device contains two thermal electrodes with a common junction. Shielding from induced industrial-frequency emf is provided by using an additional thermocouple identical to the basic unit with a common or separate hot junction. The electrodes are wound in opposite directions and the cold ends of the corresponding elements are connected.

Card 1/2

UDC: 536.532:621.316.761.2

APPROVED FOR RELEASE: 06/20/2000 CIA-RDP86-00513R001032010003-1"

"APPROVED FOR RELEASE: 06/20/2000 CIA-RDP86-00513R001032010003-1

ACC NR: AP7002982

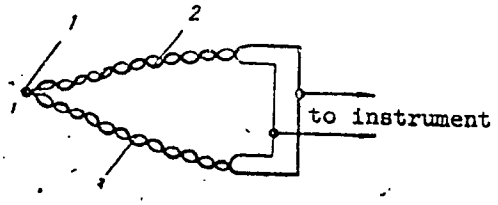

1—junction; 2—pair with right-hand winding; 3—pair with left-hand winding

SUB CODE: 13, 09/ SUBM DATE: 31Dec64

Card 2/2

APPROVED FOR RELEASE: 06/20/2000 CIA-RDP86-00513R001032010003-1"

"APPROVED FOR RELEASE: 06/20/2000 CIA-RDP86-00513R001032010003-1

D'YAKONOV, G.K. [deceased]; ZENITOV, [illegible]; [illegible]LYSHEV, V.P.; [illegible]OSKOVSKAYA, L.[illegible]; OSTROV, C.K.; USM[illegible]OV, A.G.

Investigating the temperature field of furnaces for the synthesis of butadiene. Trudy KKHTI no. [illegible] '53 [publ. '54]. (MIRA 1[illegible]:11)
(Butadiene) (Temperature --Measurement) (Furnaces)

APPROVED FOR RELEASE: 06/20/2000 CIA-RDP86-00513R001032010003-1"

"APPROVED FOR RELEASE: 06/20/2000 CIA-RDP86-00513R001032010003-1

USSR / Electricity

G

Abs Jour : Ref Zhur - Fizika, No 4, 1957, No 9621

Author : D'yakonov, C.K., Malyshev, V.P.
Inst : Not given
Title : Concerning the Problem of Dielectric Heating of a Contact Mass.

Orig Pub : Tr. Kazansk. khim. - tekhn. in-ta, 1955, vyp. 19-20, 7-13

Abstract : A contact mass is considered as an aggregate of a large number of spheres of small dimensions which makes it possible to employ averages, used in the theory of magnetic field in a medium filled with dipoles. Using various supplementary simplifications, in particular, assuming that the reacting substances are as a result of the high temperature form an ideal gas with $\varepsilon = 1$ and $\tan\delta = 0$, and also a that ε and $\tan\delta$ of the dielectric are independent of the temperature, the authors derive the following equation for the

CArd : 1/3

APPROVED FOR RELEASE: 06/20/2000 CIA-RDP86-00513R001032010003-1"

"APPROVED FOR RELEASE: 06/20/2000 CIA-RDP86-00513R001032010003-1

USSR / Electricity G

Abs Jour : Ref Zhur - Fizika, No 4, 1957, No 9621

Abstract : losses: $P = 9A \cdot \ldots f \operatorname{tg}\delta \frac{\varepsilon}{[\varepsilon + \alpha - \alpha(\varepsilon - 1)]^2}$

where P are the specific dielectric losses in watts/cubic centimeters, E_{av} is the intensity of the average macroscopic field in kv/cm, f is the frequency, a is a coefficient representing the volume occupied by spheres in a unit contact mass, and A = 5.55 is a proportionality coefficient. Comparison between (1) and an analogous formula obtained on the basis of the laws of electrodynamics shows that the contact mass, subject to the above assumptions, behaves in a high frequency electric field as a homogeneous material, relative to the dielectric losses, with equivalent dielectric constant: $\varepsilon_e = \frac{9a\varepsilon}{[\ \ + \alpha - \alpha(\varepsilon - 1)]^2}$

Card : 2/3

APPROVED FOR RELEASE: 06/20/2000 CIA-RDP86-00513R001032010003-1"

"APPROVED FOR RELEASE: 06/20/2000 CIA-RDP86-00513R001032010003-1

USSR / Electricity G

Abs Jour : Ref Zhur - Fizika, No 4, 1957, No 9621

Abstract : where ε is the dielectric constant of the material of the grains of the charge. It is concluded therefore that in a contact mass it is possible to employ several formulas derived for homogeneous dielectrics, using ε_{eq}.

Card : 3/3

APPROVED FOR RELEASE: 06/20/2000 CIA-RDP86-00513R001032010003-1"

"APPROVED FOR RELEASE: 06/20/2000 CIA-RDP86-00513R001032010003-1

MALYSHEV, V.P., inzh.

Methods of testing certain types of elements in construction yards. Biul.tekh.inform. 5 no.2:21-22 F '59. (MIRA 12:4)
(Precast concrete--Testing)

APPROVED FOR RELEASE: 06/20/2000 CIA-RDP86-00513R001032010003-1"

"APPROVED FOR RELEASE: 06/20/2000 CIA-RDP86-00513R001032010003-1

KRAYNES, L.Ya., inzh.; MALYSHEV, V.P., inzh.; MITROFANOV, Ye.N., kand. tekhn.

New methods for combined assembling of prestressed reinforced concrete construction elements. Biul. tekh. inform. po stroi. 5 no.5:14-17 My '59. (MIRA 12:8)
(Precast concrete construction)

APPROVED FOR RELEASE: 06/20/2000 CIA-RDP86-00513R001032010003-1"

"APPROVED FOR RELEASE: 06/20/2000 CIA-RDP86-00513R001032010003-1

KULAKOV, Mikhail Vasil'yevich; SHCHEPKIN, Sergey Ivanovich; MALYSHEV, V.P., kand.tekhn.nauk, retsenzent; ANDERS, V.R., inzh., retsenzent; MORDOVSKIY, S.I., kand.tekhn.nauk, red.; TAIROVA, A.L., red. izd-va; CHERNOVA, Z.I., tekhn. red.; UVAROVA, L.F., tekhn. red.

[Automatic control and measuring devices for chemical industries] Avtomaticheskie kontrol'no-izmeritel'nye pribory dlia khimicheskikh proizvodstv. Moskva, Mashgiz, 1961. 552 p. (MIRA 15:8)
(Chemical industries) (Automatic control)

APPROVED FOR RELEASE: 06/20/2000 CIA-RDP86-00513R001032010003-1"

"APPROVED FOR RELEASE: 06/20/2000 CIA-RDP86-00513R001032010003-1

SOKOLOV, V.I.; [illegible]

Improvement in [illegible] technology and an increase in labor productivity at the [illegible]-Severnaya hydraulic mine. Ugol' 39 no.[illegible]:6-10 S '[illegible]. (MIRA 17:10)

1. Shakhta "[illegible]" (for Sokolov). [illegible]. Kombinat Kuzbassugol' (for [illegible]).

APPROVED FOR RELEASE: 06/20/2000 CIA-RDP86-00513R001032010003-1"

"APPROVED FOR RELEASE: 06/20/2000 CIA-RDP86-00513R001032010003-1

BUKETOV, Ye.A.; BURDAKOV, Yu.D.; KIRR, L.D.; KLYACHEVA, Z.S.; MALYSHEV, V.P.

Shaft furnace calcination of electrolytic copper slime. Tsvet. met. 38 no.4:28-30 Ap '65. (MIRA 18:5)

APPROVED FOR RELEASE: 06/20/2000 CIA-RDP86-00513R001032010003-1"

"APPROVED FOR RELEASE: 06/20/2000 CIA-RDP86-00513R001032010003-1

MALYSHEV, V.S., gornyy inzhener.; NEKRASOV, O.P., gornyy inzhener.; RYTIKOV, E.M., gornyy inzhener.

Systems of mining thin, flat skarn deposits. Gor. zhur. no.2:14-18 F '57. (MLRA 10:4)

1. Dzhenichkinskoye rudoupravleniya.
(Mining engineering) (Silicates)

APPROVED FOR RELEASE: 06/20/2000 CIA-RDP86-00513R001032010003-1"

"APPROVED FOR RELEASE: 06/20/2000 CIA-RDP86-00513R001032010003-1

SOBOLEV, S.K., inzh.; KUDRIN, V.A., kand.tekhn.nauk; OYKS, G.N., doktor tekhn.nauk; TRUBIN, K.G., doktor tekhn.nauk, V rabote prinimali uchastiye; BLIZNYUKOV, S.A.; ROZHKOV, I.M.; MALYSHEV, V.S.

Desulfuration of pig iron outside the blast furnace by lime with the addition of aluminum powder. Sbor.Inst.stali no.39:5-15 '60. (MIRA 13:7)

1. Kafedra metallurgii stali Moskovskogo ordena Trudovogo Krasnogo Znameni instituta stali im. I.V.Stalina.
(Cast iron—Metallurgy) (Desulfuration)

APPROVED FOR RELEASE: 06/20/2000 CIA-RDP86-00513R001032010003-1"

"APPROVED FOR RELEASE: 06/20/2000 CIA-RDP86-00513R001032010003-1

MALYSHEV, Vladimir Serafimovich; KHUDYAKOV, G.V., red.; KAYDANEK, K.B., tekhn.red.

[The richer the collective farm the nearer the great goal] Bogache kolkhoz - blizhe velikaia tsel'. Orenburg, Orenburgskoe knizhnoe izd-vo, 1962. 22 p. (MIRA 15:5)

1. Predsedatel' kolkhoza "Rossiya." Perevolotskogo rayona, Orenburgskoy obl. (for Malyshev).
(Orenburg Province--Collective farms)

APPROVED FOR RELEASE: 06/20/2000 CIA-RDP86-00513R001032010003-1"

"APPROVED FOR RELEASE: 06/20/2000 CIA-RDP86-00513R001032010003-1

S/056/62/043/001/001/056
B154/B108

AUTHORS: Lavrukhina, A. K., Moskaleva, L. P., Malyshev, V. V., Safarova, L. M.

TITLE: Production of light nuclei by bombarding heavy elements with 660 Mev protons

PERIODICAL: Zhurnal eksperimental'noy i teoreticheskoy fiziki, v. 43, no. 1(7), 1962, 3-7

TEXT: The authors investigate the cross sections σ for the production of Be^7, F^{18}, Na^{24}, Mg^{28}, Si^{31}, P^{32} by 660 Mev proton bombardment of Al, Cu, Sb, Sn, Bi, U. The relative contributions of fission and fragmentation in Na^{24} production are estimated from the energy and angular distributions of the Na^{24} nuclei produced by bombarding Cu. The Al, Cu, Sb, and U targets were bombarded in the usual way (A. K. Lavrukhina, et al. Atomn. energ., 3, 285, 1957); Sn and Bi were kept in special graphite containers. The authors conclude that the production of Si^{31} and P^{32} by bombarding

Card 1/3

APPROVED FOR RELEASE: 06/20/2000 CIA-RDP86-00513R001032010003-1"

"APPROVED FOR RELEASE: 06/20/2000 CIA-RDP86-00513R001032010003-1

Cu and neighboring elements is a result of spallation and symmetric fission. Formation of lighter isotopes from all target nuclei occurs via fission and fragmentation. The ratio $\frac{\sigma(Na^{24})}{\sigma(F^{18})}$ is always > 1 and amounts to 2.5, 5.0, 2.8, 1.3 and 1.8 for Cu, Sb, U, Bi and Sn, respectively. The measured values of σ in the bombardment of Bi are virtually equal for all light nuclei which may be due to the spherical symmetry of these nuclei. The energies of the fragments from Cu fission (Na^{24} nuclei) in the angular interval of 15-80° are greater and the energies in the angular interval of 100-160° are smaller than the Coulomb repulsion of Na^{24} (20 Mev) so that asymmetric fission is supposed. The considerable anisotropy observed in the angular interval of 10-30° and the fragments with energies greater than that of Coulomb repulsion are indicative of fragmentation contributing to the process. The integral yield in fragments of a certain type depends on the "separation energy" $E = m_B + m_F - m_A$ (m_A - mass of target nucleus, m_F - mass of fragment, m_B - mass of additional fragment).

APPROVED FOR RELEASE: 06/20/2000 CIA-RDP86-00513R001032010003-1"

"APPROVED FOR RELEASE: 06/20/2000 CIA-RDP86-00513R001032010003-1

S/056/62/043/001/001/056
B154/B108

Production of light nuclei by ...

There are 2 figures and 3 tables.

ASSOCIATION: Institut geokhimii i analiticheskoy khimii Akademii nauk SSSR (Institute of Geochemistry and Analytical Chemistry of the Academy of Sciences USSR)

SUBMITTED: December 26, 1961 (initially)
March 27, 1962 (after revision)

Card 3/3

APPROVED FOR RELEASE: 06/20/2000 CIA-RDP86-00513R001032010003-1"

"APPROVED FOR RELEASE: 06/20/2000 CIA-RDP86-00513R001032010003-1

S/063/63/008/002/015/015
A057/A126

AUTHORS: Lavrukhina, A.K., Malyshev, V.V., Rodin, S.S.

TITLE: The application of zirconium molybdate and titanium dioxide to the group separation of elements

PERIODICAL: Zhurnal vsesoyuznogo khimicheskogo obshchestva imeni D.I. Mendeleyeva, v. 8, no. 2, 1963, 227 - 229

TEXT: The separation of elements by means of ion-exchange columns filled with zirconium molybdate and titanium dioxide was investigated. In the present paper results are given on the separation of the basic fission elements Rb and Cs from Sr and Ba, and from rare earths. Zirconium molybdate was prepared by very slow addition of 200 ml 1.4 M ammonium molybdate solution to 400 ml 1.2 M zirconium chloroxide solution at vigorous stirring, which was continued after the precipitation for 15 min. The precipitate was filtered off, washed for 24 h and dried for 100 h. If suspended in water, 0.2 - 0.5 mm diameter particles were obtained. The same technique was applied to the preparation of titanium dioxide from 200 ml 7% titanium tetrachloride solution and a 20% surplus of 20%

Card 1/2

APPROVED FOR RELEASE: 06/20/2000 CIA-RDP86-00513R001032010003-1"

"APPROVED FOR RELEASE: 06/20/2000 CIA-RDP86-00513R001032010003-1

ammonia solution. The obtained inorganic ion exchange substances were filled into glass columns (5 cm long, 0.5 cm^2 inner cross section), 2 cm high. In preliminary experiments the sorption of Rb^{86}, Cs^{134}, Fr^{212} and Sr^{90} was determined by the batch technique using the hydrogen and ammonia form respectively of the exchange substance. Rb, Cs, and Fr did not adsorb on the ammonia form neither from the neutral nor from the 0.3 M NH_4Cl solution, while Sr adsorbed with 87.5%. From 0.3 M HCl 11.8% Cs, 14.2% Fr, but no Sr was adsorbed by zirconium molybdate. The effect of separation of Sr^{90} with 0.1 M HCl from Cs^{134} with 4 M NH_4NO_3 or from Pr^{142} with 4 M NH_4NO_3 on zirconium molybdate in H^+ form is incomplete, since about 10% of the cesium activity remains on the columns. Cs^{134} was eluted with 95 - 97% efficiency using as eluent a mixture of 4 M NH_4NO_3 and 2 M HCl. The method was developed for the separation of short lived radioisotopes and of highly active products respectively. There is 1 figure.

ASSOCIATION: Institut geokhimii i analiticheskoy khimii im. V.I. Vernadskogo AN SSSR (Institute of Geochemistry and Analytical Chemistry imeni V.I. Vernadskiy AS USSR)

SUBMITTED: May 28, 1962

APPROVED FOR RELEASE: 06/20/2000 CIA-RDP86-00513R001032010003-1"

"APPROVED FOR RELEASE: 06/20/2000 CIA-RDP86-00513R001032010003-1

L 10198-63 EPF(c)/EPF(n)-2/EWT(m)/BDS--AFFTC/ASD/SSD--
Pr-4/Pu-4
ACCESSION NR: AP3000029 S/0056/63/044/005/1429/1436

AUTHOR: Lavrukhina, A. K.; Revina, L. D.; Malyshev, V. V.; Satarova, L. M.

68
65

TITLE: Spallation of Fe Nuclei induced by 150-MeV protons

SOURCE: Zhurnal eksper. i teoret. fiziki, v. 44, no. 5, 1963, 1429-1436

TOPIC TAGS: Nuclear reactions, iron, low-energy protons, spallation, isotope distribution

19

ABSTRACT: Continuing their earlier work on the spallation of iron isotopes by 660-MeV protons (Geokhimiya, no. 11, 955, 1961 and Radiokhimiya, in press), the authors studied nuclear reactions at lower energies, aimed at clarifying volume effects in the distribution of cosmogenic nuclides in meteorites. To this end, the main features of spallation of iron nuclei by 150-MeV protons were studied. An empirical equation is found for the production cross sections of the spallation products. The majority of the product nuclei were found to be near the bottom of the stability valley. The weighted numbers of the emitted neutrons and protons are 2.9 and 2.7, respectively. The cross section for the

Card 1/2

APPROVED FOR RELEASE: 06/20/2000 CIA-RDP86-00513R001032010003-1"

"APPROVED FOR RELEASE: 06/20/2000 CIA-RDP86-00513R001032010003-1

L 10198-63
ACCESSION NR: AP3000029

3

inelastic cross section of 150-MeV protons with iron nuclei is 568 plus or minus 162 mb. The considerable difference between the distributions of the products at 150 and 660 MeV proton energies is probably due to the formation, absorption, and scattering of pions, which increases the probability of transferring large excitation energy to a nucleus at 660 MeV proton energy. Comparison of the total cross section for the inelastic interaction of the iron nuclei with the protons at the two energies with optical-model calculations yields and estimate for the radius of the Fe-56 nucleus, namely (1.21) 10 sup -13 cm. 'The authors express their gratitude to I. S. Kalicheva, L. D. Firsova, and T. I. Kholodkovskaya who took part in this work.'

ASSOCIATION: none

SUBMITTED: 06Oct62 DATE ACQ: 12Jun63 ENCL: 00

SUB CODE: PH NR REF SOV: 005 OTHER: 016

bm/CL
Card 2/2

APPROVED FOR RELEASE: 06/20/2000 CIA-RDP86-00513R001032010003-1"

"APPROVED FOR RELEASE: 06/20/2000 CIA-RDP86-00513R001032010003-1

L 02299-67 EWT(m)/T FDN/WE/GD

ACC NR: AT6015199 (A,N) SOURCE CODE: UR/0000/66/000/000/0087/0095

AUTHOR: Gogitidze, L. D.; Logvinyuk, V. P.; Makarenkov, V. V.; Malyshev, V. V.; Panchenkov, G. M.; Yakovlevskiy, V. V.

ORG: none

66
61
B+1

TITLE: Determining nonstationary solubility of gas in hydrocarbon fuels

SOURCE: Metody otsenki ekspluatatsionnykh svoystv reaktivnykh topliv i smazochnykh materialov (Methods for the performance evaluation of jet propellants and lubricants). Moscow, Izd-vo Mashinostroyeniye, 1966, 87-95

TOPIC TAGS: petroleum fuel, fuel property, solubility, diffused gas, applied mathematics, aircraft fuel tank

ABSTRACT: A simple method was worked out and equipment was designed for determining the solubility and the diffusion coefficient of a gas in liquid under nonstationary conditions. This involves direct measurement of the volume of gas dissolved in the liquid (see Fig. 1). Conditions approximate those in the wing tanks of heavy subsonic aircraft. Equations given for calculating the nonstationary solubility of gas in a liquid enable one to calculate the gas concentration according to the

Card 1/3 UDC: 662.753.22:629.13.001.4

APPROVED FOR RELEASE: 06/20/2000 CIA-RDP86-00513R001032010003-1"

"APPROVED FOR RELEASE: 06/20/2000 CIA-RDP86-00513R001032010003-1

L 02299-67

ACC NR: AT6015199 3

depth of the fuel layer and to calculate the total amount of dissolved gas at any time. "....experimental points (showing solubility of CO_2 in hydrocarbon fuel) were provided by Tikhonov, N. I., Vinogradov, Yu. V, and Morozov-Rostovsk, N. V." Orig. art. has: 6 figures and 15 equations.

Card 2/3

APPROVED FOR RELEASE: 06/20/2000 CIA-RDP86-00513R001032010003-1"

"APPROVED FOR RELEASE: 06/20/2000 CIA-RDP86-00513R001032010003-1

L 02299-67

ACC NR: AT6015199

2

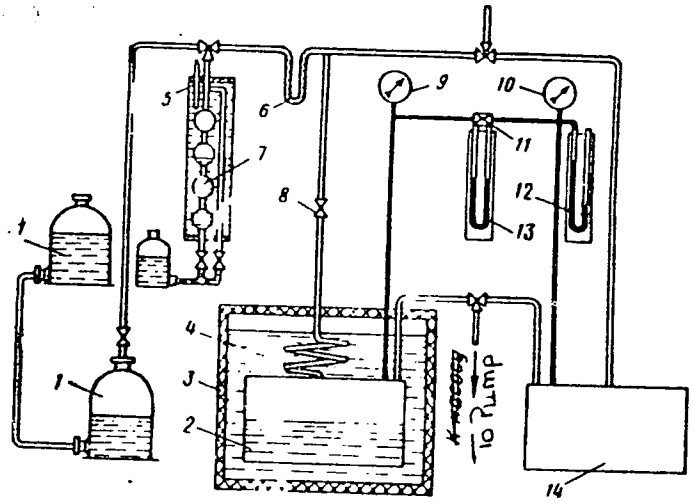

Fig. 1. Diagram of apparatus for determining diffusion coefficient and solutility of gases in fuel: 1--reservoir for storing and delivering gas to be studied, 2--diffusion tank, 3--thermostat, 4--coil, 5--thermometer, 6--dryer for gas, 7--gas measuring burette VTI-2, 8--needle valve, 9, 10--vacuum gage, 11-4-way cock, 12--mercury piezometer, 13--slanted water piezometer, 14--calibrated tank.

SUB CODE: 21, 14/ SUBM DATE: 10Dec65/ ORIG REF: 005

Card 3/3 ymb

APPROVED FOR RELEASE: 06/20/2000 CIA-RDP86-00513R001032010003-1"

"APPROVED FOR RELEASE: 06/20/2000 CIA-RDP86-00513R001032010003-1

L 04543-67 EWT(m)/T FDN/WE/GD

ACC NR: AT6015200 (A,N) SOURCE CODE: UR/0000/66/000/000/0096/0098

AUTHOR: Borisov, V. D.; Gogitidze, L. D.; Logvinyuk, V. P.; Makarenkov, V. V.; Malyshev, V. V.; Panchenkov, G. M.; Yakovlevskiy, V. V.

ORG: none

TITLE: Apparatus for determining the amount of gas dissolved in a liquid

SOURCE: Metody otsenki ekspluatatsionnykh svoystv reaktivnykh topliv i smazochnykh materialov (Methods for the performance evaluation of jet propellants and lubricants). Moscow, Izd-vo Mashinostroyeniye, 1966, 96-98

TOPIC TAGS: gas analysis, gas analyzer, solubility, petroleum fuel, LIQUID PROPERTY

ABSTRACT: A simple apparatus for determining the amount of gas dissolved in a liquid was designed so that it could be used as a gas pipette for VTI, Orsat or other gas analyzers. A special feature of the apparatus (see Fig. 1) is the use of an elastic membrane to equalize the pressure between the measuring burette and the surrounding space, and measurement of the volume of liberated gases at different pressures and temperatures. A deviation of 3.5% was found in the measurement of gases separated from a hydrocarbon fuel. Water and other liquids may be used in the determinations. Orig. art. has: 1 table and 1 figure.

Card 1/2

UDC: 662.753.22:629.13.001.4

APPROVED FOR RELEASE: 06/20/2000 CIA-RDP86-00513R001032010003-1"

"APPROVED FOR RELEASE: 06/20/2000 CIA-RDP86-00513R001032010003-1

ACC NR: AT6015200

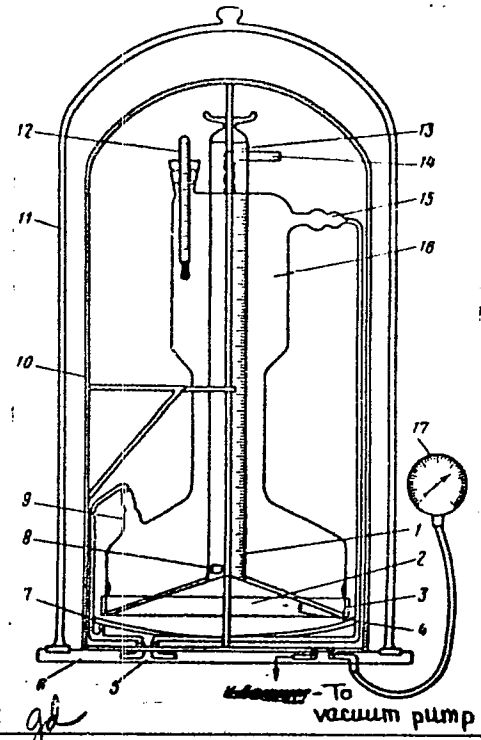

Fig. 1. Diagram of apparatus for determining amount of gas dissolved in liquid: 1--measuring burette, 2--conical funnel, 3--clamp, 4--elastic membrane (double line designates cross section of funnel 2 with membrane lying on it), 5--connector for feeding thermostatic liquid or gas to pressure chamber, 6--base, 7--lower heat shield, 8--activator, 9--connector for feeding gas or liquid, 10--housing, 11--vacuum jar, 12--thermometer, 13--ground glass stopper, 14--channel, 15--connector for withdrawing gas or liquid, 16--housing, 17--vacuum gage.

SUB CODE: 21, 14/ SUBM DATE: 10Dec65

Card 2/2

APPROVED FOR RELEASE: 06/20/2000 CIA-RDP86-00513R001032010003-1"

"APPROVED FOR RELEASE: 06/20/2000 CIA-RDP86-00513R001032010003-1

LAVRUKHINA, A.K.; REVINA, L.D.; MALYGUEV, V.V.; SATAROVA, L.M.; SU KHUN-GUY [Su Hung-kuei]; KALICHEVA, I.S.; FIRSOVA, L.P.

Further study of the proudcts of iron spallation by 660 MeV protons. Radiokhimiia 5 no. 6:721-732 '63. (MIRA 17:7)

APPROVED FOR RELEASE: 06/20/2000 CIA-RDP86-00513R001032010003-1"