"APPROVED FOR RELEASE: 09/19/2001 CIA-RDP86-00513R001032420018-0

MARKOV, B.P.; PRISYAZHNYY, V.D.

Conductance of fused reciprocal pairs of salts. System Na, K || Cl, Br. Ukr. khim. zhur. 28 no.1:130-131 '62. (MIRA 16:8)

1. Institut obshchey i neorganicheskoy khimii AN UkrSSR.

APPROVED FOR RELEASE: 09/19/2001 CIA-RDP86-00513R001032420018-0"

"APPROVED FOR RELEASE: 09/19/2001 CIA-RDP86-00513R001032420018-0

MARKOV, B.F.; PRISYAZHNYY, V.D.

Electric onductance of melts of reciprocal pairs of salts. System Na, Cs || Cl, Br. Ukr.khim.zhur. 28 no.2:268-269 '62. (MIRA 15:3)

1. Institut obshchey i neorganicheskoy khimii AN USSR.
(Salts--Electric properties) (Systems (Chemistry))

APPROVED FOR RELEASE: 09/19/2001 CIA-RDP86-00513R001032420018-0"

"APPROVED FOR RELEASE: 09/19/2001 CIA-RDP86-00513R001032420018-0

MARKOV, B. F.; PRISYAZHNYY, V. D.

Conductance of melts of reciprocal pairs of salts. System K, Rb Cl, Br. Ukr. khim. zhur. 28 no.3:418 '62. (MIRA 15:10)

1. Institut obshchey i neorganicheskoy khimii AN UkrSSR.

(Salts) (Systems(Chemistry))
(Electric conductivity)

APPROVED FOR RELEASE: 09/19/2001 CIA-RDP86-00513R001032420018-0"

"APPROVED FOR RELEASE: 09/19/2001 CIA-RDP86-00513R001032420018-0

MARKOV, B. F.; PRISYAZHNYY, V. D.

Electric conductance of fused reciprocal pairs of salts. System Ag, K // Cl, Br. Ukr. khim. zhur. 28 no.5:653 '62.
(MIRA 15:10)

1. Institut obshchey i neorganicheskoy khimii AN UkrSSR.

(Fused salts—Electric properties)

APPROVED FOR RELEASE: 09/19/2001 CIA-RDP86-00513R001032420018-0"

"APPROVED FOR RELEASE: 09/19/2001 CIA-RDP86-00513R001032420018-0

MARKOV, B.F.; TISHURA, T.A.

Isobaric potentials in the formation of titanium chloride. Titan i ego splavy no.9:199-204 '63. (MIRA 16:9)
(Titanium chloride—Thermodynamic properties)

APPROVED FOR RELEASE: 09/19/2001 CIA-RDP86-00513R001032420018-0"

"APPROVED FOR RELEASE: 09/19/2001 CIA-RDP86-00513R001032420018-0

MARKOV, B.F.; PRISYAZHNYY, V.D.

Molar volume of melts of reciprocal salt pairs. Ukr.khim.zhur. 29 no.1:47-51 '63. (MIRA 16:5)

1. Institut obshchey i neorganicheskoy khimii AN UkrSSR.
(Fused salts)

APPROVED FOR RELEASE: 09/19/2001 CIA-RDP86-00513R001032420018-0"

"APPROVED FOR RELEASE: 09/19/2001 CIA-RDP86-00513R001032420018-0

S/073/63/029/002/001/006
A057/A126

AUTHORS: Markov, B. F., Tishura, T. A.

TITLE: Isobaric potentials of the formation of titanium chlorides

PERIODICAL: Ukrainskiy khimicheskiy zhurnal, v. 29, no. 2, 1963, 150 - 155

TEXT: Thermodynamic calculations of isobaric potentials of titanium chlorides were carried out on the basis of literature data in order to obtain values for further calculations, since data given by W. J. Hamer et al (J. Electrochem. Soc. v. 103, 1956, 8) and R. B. Head (Australian J. of Chem., v. 13, 1960, 332) are not satisfactory. The isobaric potential for $TiCl_4$ formation at 298 - 1,200°K was calculated from the thermodynamic constants of chlorine, titanium and titanium tetrachloride found in literature. In the range of 409 - 1,153°K the temperature dependence of the isobaric potential can be expressed by the equation: $\Delta Z^{o}_{T} TiCl_4$ = = - 180.94 + 0.0291·T kcal/mole with an accuracy of ±1 kcal. The isobaric potential of the $TiCl_3$ formation was determined by means of the following reactions: $TiCl_4 + Hg \rightleftarrows TiCl_3 + 1/2Hg_2Cl_2$; $TiCl_4 + Ag \rightleftarrows TiCl_3 + AgCl$; and $TiCl_4 + 1/2H_2 \rightleftarrows TiCl_3 + HCl$. These reactions were studied already by various authors. The

Card 1/2

APPROVED FOR RELEASE: 09/19/2001 CIA-RDP86-00513R001032420018-0"

"APPROVED FOR RELEASE: 09/19/2001 CIA-RDP86-00513R001032420018-0

dependence of the potential on temperature is expressed for the range of 409 - - 1,000°K by: $\Delta Z_T^o TiCl_3 = -170.4 + 0.0541 \cdot T$ kcal/mole with a ±1 kcal accuracy. Based on the isobaric potentials of the disproportion reactions $2TiCl_{3(solid)} \rightleftarrows TiCl_{4(gas)} + TiCl_{2(solid)}$ and $2TiCl_{2(solid)} \rightleftarrows TiCl_{4(gas)} + Ti$ the isobaric potential of $TiCl_2$ formation was calculated. The temperature dependence for the range of 600 - 1,600°K is given by the equation $\Delta Z_T^o TiCl_2 = -120.1 + 0.0369 \cdot T$ kcal/mole with a minimum accuracy of ± 1.5 kcal. There are 2 figures.

ASSOCIATION: Institut obshchey i neorganicheskoy khimii AN USSR (Institute of General and Inorganic Chemistry AS UkrSSSR)

SUBMITTED: April 10, 1962

APPROVED FOR RELEASE: 09/19/2001 CIA-RDP86-00513R001032420018-0"

"APPROVED FOR RELEASE: 09/19/2001 CIA-RDP86-00513R001032420018-0

MARKOV, B.F.; VOLKOV, S.V.

Isobaric potential of the formation of fused zinc chloride. Ukr.khim. zhur. 29 no.5:511-515 '63. (MIRA 16:6)

1. Institut obshchey i neorganicheskoy khimii AN UkrSSR.

APPROVED FOR RELEASE: 09/19/2001 CIA-RDP86-00513R001032420018-0"

"APPROVED FOR RELEASE: 09/19/2001 CIA-RDP86-00513R001032420018-0

L 12440-63 EWT(m)/BDS ESD-3 RM

ACCESSION NR: AP3002500 S/0073/63/029/006/0600/0604

55

AUTHOR: Markov, B. F.; Podafa, B. P.

TITLE: Oxidation-reduction potential of the system Ti sup 2+/Ti sup 3+B in KCl-NaCl melt

SOURCE: Ukrainskiy khimicheskiy zhurnal, v. 29, no. 6, 1963, 600-604

TOPIC TAGS: KCl-NaCl melts, coefficient of activity, TiCl sub 3, TiCl sub 2, Ti sup +3 complex, Ti sup +2 complex

ABSTRACT: The oxidation-reduction potential of the Ti sup 2+ / Ti sup 3+ system in KCl-NaCl melts was determined from potentiometric titration curves of TiCl sub 3 with metallic Ti: at 700 degrees it was 1.807 plus or minus 0.008 v on the chlorine scale. The coefficient of activity of TiCl sub 3 and TiCl sub 2 in KCl and NaCl solutions indicate the trivalent Ti forms more stable complexes than the divalent one. Orig. art. has: 1 figure, 1 table, 1 formula.

ASSOCIATION: Institut obshchey i neorganicheskoy khimii AN UkrSSR (Institute of General and Inorganic Chemistry, Academy of Sciences UkrSSR)

Card 1/4

APPROVED FOR RELEASE: 09/19/2001 CIA-RDP86-00513R001032420018-0"

"APPROVED FOR RELEASE: 09/19/2001 CIA-RDP86-00513R001032420018-0

MARKOV, B.F., PRISYAZHNYY, V.D.

Electric conductance of melts of reciprocal pairs of salts. V System Na, Ag || Cl, Br. Ukr. khim. zhur. 29 no.7:773 '63. (MIRA 16:8)

1. Institut obshchey i neorganicheskoy khimii AN UkrSSR.
(Fused salts--Electric properties)

APPROVED FOR RELEASE: 09/19/2001 CIA-RDP86-00513R001032420018-0"

"APPROVED FOR RELEASE: 09/19/2001 CIA-RDP86-00513R001032420018-0

MARKOV, B.F.; VOLKOV, S.V.

Molar volume of fused mixtures of zinc chloride with alkali metal chlorides. Ukr. khim.zhur. 29 no.9:945-946 '63. (MIRA 17:4)

1. Institut obshchey i neorganicheskoy khimii AN UkrSSR.

APPROVED FOR RELEASE: 09/19/2001 CIA-RDP86-00513R001032420018-0"

"APPROVED FOR RELEASE: 09/19/2001 CIA-RDP86-00513R001032420018-0

MARKOV, B.F.; BARABANOVA, A.S.; VOYTOVICH, B.A.

Thermal analysis of the systems $TiCl_4$ - $NbCl_5$ - $POCl_3$ and $TiCl_4$ - $TaCl_5$ - $POCl_3$. Ukr. khim. zhur. 29 no.10:1035-1042 '63. (MIRA 17:1)

1. Institut obshchey i neorganicheskoy khimii AN UkrSSR.

APPROVED FOR RELEASE: 09/19/2001 CIA-RDP86-00513R001032420018-0"

"APPROVED FOR RELEASE: 09/19/2001 CIA-RDP86-00513R001032420018-0

MARKOV, B.F.; TISHURA, T.A.

Anode polarization during titanium dissolution in fused chlorides. Ukr. khim. zhur. 29 no.10:1043-1048 '63. (MIRA 17:1)

1. Institut obshchey i neorganicheskoy khimii AN UkrSSR.

APPROVED FOR RELEASE: 09/19/2001 CIA-RDP86-00513R001032420018-0"

"APPROVED FOR RELEASE: 09/19/2001 CIA-RDP86-00513R001032420018-0

MARKOV, B.F.; PRISYAZHNYY, V.D.

Molar volume of molten reciprocal pairs of salts. Ukr. khim. zhur. 29 no.11:1128-1135 '63. (MIRA 16:12)

1. Institut obshchey i neorganicheskoy khimii AN UkrSSR.

APPROVED FOR RELEASE: 09/19/2001 CIA-RDP86-00513R001032420018-0"

"APPROVED FOR RELEASE: 09/19/2001 CIA-RDP86-00513R001032420018-0

ACCESSION NR: AP4000017 S/0073/63/029/011/1155/1157

AUTHORS: Markov, B. F., Tishura, T. A.

TITLE: Form of cathodic titanium deposits obtained by electrolysis of molten chlorides

SOURCE: Ukrainskiy khimicheskiy zhurnal, v. 29, no. 11, 1963, 1155-1157

TOPIC TAGS: titanium electrolytic extraction, titanium electrolytic refining, fused chloride titanium electrolytic extraction method, alpha titanium cathodic deposit, beta titanium cathodic deposit, titanium, fused chloride, electrolytic extraction, alpha titanium, beta titanium, cathodic deposit, electrolytic extraction method, molten chloride electrolysis, titanium cathodic deposit

ABSTRACT: The effect of temperature on the type of cathodic deposit obtained in the electrolysis of titanium was studied in a series of experiments in which all the electrolysis parameters were re-

Card 1/2

APPROVED FOR RELEASE: 09/19/2001 CIA-RDP86-00513R001032420018-0"

"APPROVED FOR RELEASE: 09/19/2001 CIA-RDP86-00513R001032420018-0

ACCESSION NR: AP4000017

tained, changing temperature only (1KH18N9T steel reactor, NaCl electrolyte). In electrolysis at 850°, the initial concentration of dissolved titanium chlorides is 2.5-3%, current yield 102-104%, after electrolyis the electrolyte contains divalent titanium chloride, and the alpha-form of metal was deposited. At 1000°, the titanium chloride concentration is 4.5-8 wt.%, current yield 75-85%, the electrolyted contained 15-20% titanium trichloride, and the beta-form was deposited. At constant current, the reversible e.m.f. decreased, leveling off at 50-60 mv. at 850° and 8-10 mv. at 1000°. Thus at the different temperatures there were differences in acceleration of the diffusion processes, in the heterogeneous equilibrium between titanium and its lower chlorides, and in the form and dimensions of the deposited titanium crystals. Orig. art. has: 2 figures.

ASSOCIATION: Institut obshchey i neorganicheskoy khimii AN SSR (Institute of General & Inorganic Chemistry AN SSR)

SUBMITTED: 20Apr63 DATE ACQ: 02Dec63

SUB CODE: ML NO REF SOV: 002 OTHER: 005

Card 2/2

APPROVED FOR RELEASE: 09/19/2001 CIA-RDP86-00513R001032420018-0"

"APPROVED FOR RELEASE: 09/19/2001 CIA-RDP86-00513R001032420018-0

MARKOV, B.F.; PRISYAZHNYY, V.D.

Molecular conductivity of fused reciprocal salt pairs. Ukr.khim. zhur. 29 no.12:1250-1259 '63. (MIRA 17:2)

1. Institut obshchey i neorganicheskoy khimii AN UkrSSR.

APPROVED FOR RELEASE: 09/19/2001 CIA-RDP86-00513R001032420018-0"

"APPROVED FOR RELEASE: 09/19/2001 CIA-RDP86-00513R001032420018-0

MARKOV, B.F.; VOLKOV, S.V.

Thermodynamic properties of molten zinc chloride. System $ZnCl_2$ - LiCl. Ukr. khim. zhur. 30 no.4:341-347 '64. (MIRA 17:6)

1. Institut obshchey i neorganicheskoy khimii AN UkrSSR.

APPROVED FOR RELEASE: 09/19/2001 CIA-RDP86-00513R001032420018-0"

"APPROVED FOR RELEASE: 09/19/2001 CIA-RDP86-00513R001032420018-0

APPROVED FOR RELEASE: 09/19/2001 CIA-RDP86-00513R001032420018-0"

"APPROVED FOR RELEASE: 09/19/2001 CIA-RDP86-00513R001032420018-0

MARKOV, B.F.; VOLKOV, S.V.

Thermodynamic properties of zinc chloride in fused mixtures of $ZnCl_2$ - KCl and $ZnCl_2$ - RbCl. Ukr. khim. zhur. 30 no.6: 545-553 '64. (MIRA 18:5)

1. Institut obshchey i neorganicheskoy khimii AN UkrSSR.

APPROVED FOR RELEASE: 09/19/2001 CIA-RDP86-00513R001032420018-0"

"APPROVED FOR RELEASE: 09/19/2001 CIA-RDP86-00513R001032420018-0

MARKOV, B.F.; PRISYAZHNYY, V.D.

Conductance of melts of reciprocal pairs of salts of the system K, Cs / Cl, Br. Ukr. khim. zhur. 31 no.1:117 '65. (MIRA 18:5)

APPROVED FOR RELEASE: 09/19/2001 CIA-RDP86-00513R001032420018-0"

"APPROVED FOR RELEASE: 09/19/2001 CIA-RDP86-00513R001032420018-0

MARKOV, B.F.; POLISHCHUK, A.F.

Change of conductance during the phase transition in the system salt crystal - fused alkali metal nitrates and nitrites. Ukr. khim.zhur. 31 no.2:182-185 '65. (MIRA 18:1)

1. Institut obshchey i neorganicheskoy khimii AN UkrSSR.

APPROVED FOR RELEASE: 09/19/2001 CIA-RDP86-00513R001032420018-0"

"APPROVED FOR RELEASE: 09/19/2001 CIA-RDP86-00513R001032420018-0

MARKOV, B.F.; PRISYAZHNYY, V.D.; POLISHCHUK, A.F.

Measurement of molar volume of salt in melting, a new variation of the pycnometric method. Ukr. khim. zhur. 31 no.4:418-420 '65. (MIRA 18:5)

1. Institut obshchey i neorganicheskoy khimii AN UkrSSR.

APPROVED FOR RELEASE: 09/19/2001 CIA-RDP86-00513R001032420018-0"

"APPROVED FOR RELEASE: 09/19/2001 CIA-RDP86-00513R001032420018-0

MARKOV, B.F.; [illegible]

Oxido-[illegible] ystem [illegible]+/[illegible]3+ [illegible]
KBr-NaBr [illegible] no.8.[illegible]-8[illegible]5 [illegible]

1. Ins[illegible] [illegible]

APPROVED FOR RELEASE: 09/19/2001 CIA-RDP86-00513R001032420018-0"

"APPROVED FOR RELEASE: 09/19/2001 CIA-RDP86-00513R001032420018-0

MARKOV, B.F.; POLISHCHUK, A.F.

Conductance of salts in the region of crystal - melt phase transition. Halides of some bivalent metals. Ukr. khim. zhur. 31 no.10:1065-1071 '65. (MIRA 19:1)

1. Institut obshchey i neorganicheskoy khimii AN UkrSSR. Submitted February 22, 1965.

APPROVED FOR RELEASE: 09/19/2001 CIA-RDP86-00513R001032420018-0"

"APPROVED FOR RELEASE: 09/19/2001 CIA-RDP86-00513R001032420018-0

MARKOV, B.F.; POLISHCHUK, A.F.

Conductance of salts in the region of crystal - melt phase transition. Effect of impurities. Ukr. khim. zhur. 31 no. 11: 1133-1136 '65 (MIRA 19:1)

1. Institut obshchey i neorganicheskoy khimii AN UkrSSR.

APPROVED FOR RELEASE: 09/19/2001 CIA-RDP86-00513R001032420018-0"

"APPROVED FOR RELEASE: 09/19/2001 CIA-RDP86-00513R001032420018-0

MARKOV, B. G., DELIMARSKIY, U. K., and PANCHENKO, I. D.

(Institute of General and Ingrganic Chemistry, Acad. Sci. UKr., SSR, Kiev, USSR)

"Thermodynamic Properties of Some Fused Chlorides,"
paper submitted at Soviet High-Polymers, Intl. Conference, Nottingham,
21-24 July 1953.

E-3,109,661

APPROVED FOR RELEASE: 09/19/2001 CIA-RDP86-00513R001032420018-0"

"APPROVED FOR RELEASE: 09/19/2001 CIA-RDP86-00513R001032420018-0

MARKOV, Boris Glebovich, inzh.; EZDRIN, Konstantin Borisovich, inzh.; UKRAINCHIK, M.M., inzh., red.

[Construction of covered markets using 40x40m double curvature precast reinforced shells] Stroitel'stvo krytykh rynkov s ispol'zovaniem sbornykh zhelezobetonnykh obolochek dvoiakoi krivizny razmerami 40x40 m. Moskva, Gosstroiizdat, 1962. 46 p. (MIRA 17:7)

1. Akademiya stroitel'stva i arkhitektury SSSR. Nauchno-issledovatel'skiy institut organizatsii, mekhanizatsii i tekhnicheskoy pomoshchi stroitel'stvu. 2. Glavnyy konstruktor otdela po proyektirovaniyu predpriyatiy torgovli Gosudarstvennogo instituta po proyektirovaniyu predpriyatiy torgovli i obshchestvennogo pitaniya Ministerstva torgovli RSFSR (for Markov).

APPROVED FOR RELEASE: 09/19/2001 CIA-RDP86-00513R001032420018-0"

"APPROVED FOR RELEASE: 09/19/2001 CIA-RDP86-00513R001032420018-0

MARKOV, B. L.

Men'shikov, R. I. and Markov, B. L. "The movement of gases in the recirculation steel smelting furnace," In the symposium: Nauch. [illegible] Moskvy, Moscow, 1949, p. 119-22

SO: U-4934, 29 Oct 53, (Letopis 'Zhurnal'nykh Statey, No. 1[illegible], 1949).

APPROVED FOR RELEASE: 09/19/2001 CIA-RDP86-00513R001032420018-0"

"APPROVED FOR RELEASE: 09/19/2001 CIA-RDP86-00513R001032420018-0

MARKOV, F. I.

Dissertation: "Melting of Layers of Metal Pieces in the Case of Top Heating." Cand Tech Sci, Moscow Inst of Steel, Moscow, 19[illegible]. Referativnyy Zhurnal--Khimiya, [illegible], No 8, Apr 54.

SO: SUM 284, 26 Nov 1954

APPROVED FOR RELEASE: 09/19/2001 CIA-RDP86-00513R001032420018-0"

"APPROVED FOR RELEASE: 09/19/2001 CIA-RDP86-00513R001032420018-0

REKHTMAN, Anna Yakovlevna, kandidat tekhnicheskikh nauk; MARKOV, Boris Lazarevich, kandidat tekhnicheskikh nauk; KRIVANDIN, Vladimir Alekseyevich, kandidat tekhnicheskikh nauk; GLINKOV, M.A., redaktor; LAHOVSKAYA, M.R., redaktor izdatel'stva; BERLOV, A.P., tekhnicheskiy redaktor

[Plant laboratories making hydraulic models of metallurgical furnaces] Zavodskaia laboratoriia gidravlicheskogo modelirovaniia metallurgicheskikh pechei. Moskva, Gos. nauchno-tekhn. izd-vo lit-ry po chernoi i tsvetnoi metallurgii, 1956. 83 p. (MLRA 9:12)
(Furnaces--Models)

APPROVED FOR RELEASE: 09/19/2001 CIA-RDP86-00513R001032420018-0"

"APPROVED FOR RELEASE: 09/19/2001 CIA-RDP86-00513R001032420018-0

Markov, B. L.

.37 1957 12 23:38

Translation from: Referativnyy zhurnal Metallurgiya 1957 Nr [illegible] p 40 (USSR)

AUTHORS: Glinkov, M. A., Markov, B. L.

TITLE: The Fusion of a Layer of a Metallic Charge Heated From Above (Plavleniye sloya metallicheskoy shikhty, nagrevayemogo sverkhu)

PERIODICAL: V sb.: Proizvo stali Moscow Metallurgizdat 1956 pp [illegible] 38

ABSTRACT: To conduct laboratory studies of the process of fusion (F) of a metallic charge (Ch), an experimental installation was designed which consisted of two adjoining chambers: an upper chamber containing the heating unit and a lower chamber containing the basin with the fusible charge. In order to reduce heat losses the internal surfaces of the chambers were coated with Ag and equipped with a system of evaporation cooling. Pb was selected as the charge material because it may be utilized in charges of all shapes and dimensions. The charge was placed into a steel shell fitting snugly into a steel cylinder equipped with a mesh cover intended to prevent the charge from rising above the top of the cylinder. The upward movement of the shell is accomplished by means of a special rod activated through weight

Card 1/2

APPROVED FOR RELEASE: 09/19/2001 CIA-RDP86-00513R001032420018-0"

"APPROVED FOR RELEASE: 09/19/2001 CIA-RDP86-00513R001032420018-0

137-1957-1-23138

The Fusion of a Layer of a Metal Charge Heated From Above

The advance of the rod is a measure of the settling of the charge. To prevent the oxidation of the Pb the basin is filled with N_2. For all fusion processes, readings are taken on the variation of the height of the charge layer with time, the amount of heat imparted to the charge, and the temperatures at various points of the layer. A series of fusions, identical in all respects, was performed with interruptions in order to observe the condition of the charge at various stages. A study of the charge cooled at different stages of the fusion process showed that the melt did not flow to the bottom but that it advanced downward along a single front, enveloping the solid lumps and giving up its heat to them. In rapid fusion the melt filled all spaces between the lumps, thereby preventing the liquid melt from transfering heat to the lower layers of the charge. From an analysis of the experimental melts the fusion process may be divided into three stages: the heating of the surface of the charge to the melting point, the fusion preceding the complete settling of the layer, and the fusion after the complete settling of the layer and after the formation of a free liquid surface.

Card 2/2

M. R.

1. Metallurgy-USSR 2. Furnaces-Heating 3. Fusible charges-Applications

APPROVED FOR RELEASE: 09/19/2001 CIA-RDP86-00513R001032420018-0"

"APPROVED FOR RELEASE: 09/19/2001 CIA-RDP86-00513R001032420018-0

AUTHORS: Markov, B. L., Solomentsev, S. L. SOV/163-58-2-23/46

TITLE: Cooling of the Panels of Measuring Instruments Used at High Temperatures (Okhlazhdeniye armatury izmeritel'nykh priborov, rabotayushchikh pri vysokikh temperaturakh)

PERIODICAL: Nauchnyye doklady vysshey shkoly. Metallurgiya, 1958, Nr 2, pp. 142-144 (USSR)

ABSTRACT: The system of the air-water cooling makes possible a sufficient measurement of the temperature in the Martin furnace in the tempering and melting processes. The construction and the effect of the thermocouple produced this way are described. A chromium-aluminum thermocouple was used which was protected by a steel tube covered by a chromium-magnesite layer consisting of 85 % chromium-magnesite powder and 15 % refractory clay. The thermocouple tube protected this way permits operation up to 2000°C. In the case of a normal cooling an air-pressure of 4,5 atmospheres excess pressure and a water pressure of 1,5 atmospheres excess pressure are necessary. By means of these thermocouples also on hard conditions, especially at high temperatures, satisfactory results may be

Card 1/2

APPROVED FOR RELEASE: 09/19/2001 CIA-RDP86-00513R001032420018-0"

"APPROVED FOR RELEASE: 09/19/2001 CIA-RDP86-00513R001032420018-0

Cooling f the Panels of Measuring Instruments Used at High Temperatures SOV/163-58-2-23/46

obtained. The air-water cooling can also be sucessfully used in the construction of various measuring instruments suited for higher temperatures. Its use in longlasting temperature measurements of liquid steel is especially practical. The air-water cooling removes the danger of an explosion when the liquid metals contact the slag.
There are 3 figures.

ASSOCIATION: Moskovskiy institut stali (Moscow Steel Institute)

SUBMITTED: October 28, 1957

Card 2/2

APPROVED FOR RELEASE: 09/19/2001 CIA-RDP86-00513R001032420018-0"

"APPROVED FOR RELEASE: 09/19/2001 CIA-RDP86-00513R001032420018-0

18(0)

AUTHORS: Markov, B. L., Men'shikov, R. I. SOV/163-58-4-20/47

TITLE: Molding the Heat Exchange in Regenerators (Modelirovaniye teploobmena v regeneratorakh)

PERIODICAL: Nauchnyye doklady vysshey shkoly. Metallurgiya, 1958, Nr 4, pp 118-123 (USSR)

ABSTRACT: The formulas (1), (2) and (1a) are set up. The analytical solution of these formulas with the limiting conditions set up represents a rather difficult mathematical problem. It may be found by means of a mathematical machine solving a system of equations directly in differential form. In particular, a hydrodynamic model of a regenerator may be made solving the problem in involving differential form. Such a hydraulic model may serve as a prototype for the making of a quick-acting electric model. The work of such hydromodel is examined applied to air heating. In contrast to the method applied otherwise to set up the differential equations for hydrointegrators with unlimited number of containers, with subsequent transition to the involving differential form for apparatuses with limited number of containers, here the involving-differential operations

Card 1/2

APPROVED FOR RELEASE: 09/19/2001 CIA-RDP86-00513R001032420018-0"

"APPROVED FOR RELEASE: 09/19/2001 CIA-RDP86-00513R001032420018-0

Molding the Heat Exchange in Regenerators SOV/163-58-4-20/47

(difference equations) are immediately set up for the fixture and the hydromodel of the fixture. There are 1 figure, 3 tables and 2 Soviet references.

ASSOCIATION: Moskovskiy institut stali (Moscow Steel Institute)

SUBMITTED: January 24, 1958

Card 2/2

APPROVED FOR RELEASE: 09/19/2001 CIA-RDP86-00513R001032420018-0"

"APPROVED FOR RELEASE: 09/19/2001 CIA-RDP86-00513R001032420018-0

SOV/163-59-2-17/3

18(3)

AUTHOR: Markov, B. L.

TITLE: The Influence of the Real Surface of the Open-Hearth Tank on the Heat Current Received by It (Vliyaniye fakticheskoy poverkhnosti martenovskoy vanny na poluchayemyy yeyu teplovoy potok)

PERIODICAL: Nauchnyye doklady vysshey shkoly. Metallurgiya, 1959, Nr 2, pp 90 - 93 (USSR)

ABSTRACT: As a rule, all computations of the heat exchange are referred to the surface of the tank bottom. In fact however, the real surface differs considerably from that of the bottom. Figure 1 shows this difference in the furnace charge. Also the billowing, blistering melt still has a surface by 1.6 times larger than the tank bottom. At first, the simplest case of heat transmission in atmosphere pervious to rays is investigated. The heat current received by the bottom surface and by the real surface from the furnace arch is computed by the formula of heat exchange in a closed system. Figure 2 shows the results for three values of blackness degree of the surface

Card 1/3

APPROVED FOR RELEASE: 09/19/2001 CIA-RDP86-00513R001032420018-0"

"APPROVED FOR RELEASE: 09/19/2001 CIA-RDP86-00513R001032420018-0

The Influence of the Real Surface of the Open-Hearth Tank on the Heat Current Received by It SOV/[illegible]-2-17/[illegible]

(with an absolutely black surface, the kind of the formation is without influence). At the degree of blackness $\varepsilon_m = 0.7$ occurring in practice, the difference of the two heat currents is only 16%. A different situation prevails if the working room is filled with radiant gas. Under the assumption that the gas shows the same degree of blackness in all directions, the ratio between the heat currents of the tank bottom and of the real surface is computed by the equation of H. C. Hottel (Ref 2). Figure 3a shows this dependence. The heat current increases with an increase in the real surface and with a rising degree of blackness. Figure 3b shows the result of a second computation, which better corresponds to practical conditions, under the assumption that the gas shows different degrees of blackness in different directions. Although, the influence of the real surface on the heat current is great. In quiet boiling, the heat current computed for the tank bottom will be 20% low. In charging and heating-up, this difference may amount to 50 - 100%. There are 3 figures and 7 references, 2 of which are Soviet.

Card 2/3

APPROVED FOR RELEASE: 09/19/2001 CIA-RDP86-00513R001032420018-0"

"APPROVED FOR RELEASE: 09/19/2001 CIA-RDP86-00513R001032420018-0

The Influence of the Real Surface of the Open-Hearth Tank on the Heat Current Received by It SOV/163-[illegible]/58

ASSOCIATION: Moskovskiy institut stali (Moscow Steel Institute)

SUBMITTED: June 14, 1958

Card 3/3

APPROVED FOR RELEASE: 09/19/2001 CIA-RDP86-00513R001032420018-0"

"APPROVED FOR RELEASE: 09/19/2001 CIA-RDP86-00513R001032420018-0

SOV/163-59-2-21/48

18(3)

AUTHOR: Markov, B. L.

TITLE: On the Working Method of Introducing the Charge of the Open Hearth Furnace in the Scrap Process (O rezhime zavalki martenovskoy pechi skrap-protsesse)

PERIODICAL: Nauchnyye doklady vysshey shkoly. Metallurgiya, 1959, Nr 2, pp 117 - 122 (USSR)

ABSTRACT: This investigation deals with the problem concerning the most convenient kind of charging (at maximum temperature or at a lower temperature, in which sequence and rate), from a pyrometric point of view. The model investigation was carried out with co-operation of Engineer L. Vatslavik on a Budrin-Lukyanov hydro-integrator (Fig 1), the vessels of which are used as models for the temperature of arch and bottom, for the charge and its temperature, and which are connected by hydraulic resistors (capillaries) which work as analogs to the heat transmission. By means of an integrator, the heating of the charge was computed per 1 m^2 of bottom surface during the charging in 1,2,3, and 4 layers. The results are illustrated in figures 2 and 3. The values are too low as compared with practical data, since in practice not 4, but

Card 1/2

APPROVED FOR RELEASE: 09/19/2001 CIA-RDP86-00513R001032420018-0"

"APPROVED FOR RELEASE: 09/19/2001 CIA-RDP86-00513R001032420018-0

On the Working Method of Introducing the Charge of the Open-Hearth Furnace in the Scrap Process SOV/16[illegible] 2-21, [illegible]

10 - 20 layers are charged. The following conclusions are arrived at: 1) The charging is to be carried out under maximum heat load; 2) charging in thin layers is of advantage; 3) the rate of charging should be chosen so that the layer previously introduced is covered by the subsequent layer when its surface begins melting. There are 3 figures, 1 table, and 5 Soviet references.

ASSOCIATION: Moskovskiy institut stali (Moscow Steel Institute)

SUBMITTED: June 21, 1958

Card 2/2

APPROVED FOR RELEASE: 09/19/2001 CIA-RDP86-00513R001032420018-0"

"APPROVED FOR RELEASE: 09/19/2001 CIA-RDP86-00513R001032420018-0

PHASE I BOOK EXPLOITATION SOV/4782

Moscow. Institut stali

Proizvodstvo i obrabotka stali i splavov (Production and Treatment of Steel and Alloys) Moscow, Metallurgizdat, 1960. 462 p. (Series: Its: Sbornik, 39) 2,100 copies printed.

Ed.: Ye. A. Borko; Ed. of Publishing House: S. L. Zinger; Tech. Ed.: N. R. Kleynman; Editorial Council of the Institute: M. A. Glinkov, Professor, Doctor of Technical Sciences; R. N. Grigorash, Docent, Candidate of Technical Sciences; V. P. Yelyutin, Professor, Doctor of Technical Sciences; A. A. Zhukhovitskiy, Professor, Doctor of Chemical Sciences; I. N. Kidin, Professor, Doctor of Technical Sciences; B. G. Livshits, Professor, Doctor of Technical Sciences; A. P. Lyubimov, Professor, Doctor of Technical Sciences; I. M. Pavlov, Corresponding Member, Academy of Sciences USSR; and A. N. Pokhvisnev, Professor, Doctor of Technical Sciences.

PURPOSE: This book is intended for technical personnel in industry, scientific institutions and schools of higher education, dealing with open-hearth and electric-furnace steelmaking, metal rolling, physical metallurgy, metallography, and heat treatment. It may

Card 1/10

also be used by students specializing in these fields.

COVERAGE: The book contains results of theoretical and experimental investigations of metallurgical and heat-engineering processes in open-hearth and electric furnaces. Data are included on the following: desulfurizing of pig iron outside the blast furnace, interaction of oxides of the carbide-forming metals with solid carbon, the change of content of gases in the bath of the open-hearth furnace in various periods of melting, intensification of the electric melting of steel, etc. Other articles deal with the nonuniformity of deformation in rolling, the study of the continuous rolling process, the dependence of the friction - slippage coefficients in rolling on a number of factors, and other problems in the pressworking of metals. Articles on physical metallurgy and the theoretical principles and techniques of the heat treatment of steel are also included. No personalities are mentioned. References accompany most of the articles. There are 207 references, both Soviet and non-Soviet.

Card 2/10

Yednaral, F. P., Doctor of Technical Sciences [Department of Electrometallurgy]. Use of Oxygen and Complex Deoxidizers for Intensification of the Electric Furnace Melting Process of Constructional Steel 49

Orlov, V. I. Change of Gas Content in the Open-Hearth Bath During the Deoxidation and Holding Period 73

Glinkov, M. A., V. A. Krivandin, Candidate of Technical Sciences [Department of Metallurgical Furnaces]. Performance of the High-Temperature Ceramic Recuperator 80

Markov, M. L., Candidate of Technical Sciences [Department of Metallurgical Furnaces]. Mathematical Analysis of the Melting Process of an Infinite Plate by Transferring the Heat Through the Molten Metal 92

Polukhin, P. I., Doctor of Technical Sciences, and B. V. Yegorov, Candidate of Technical Sciences [Department of Rolling]. Investigation of Nonuniformity of Deformation in Rolling 104

Card 4/10

APPROVED FOR RELEASE: 09/19/2001 CIA-RDP86-00513R001032420018-0"

"APPROVED FOR RELEASE: 09/19/2001 CIA-RDP86-00513R001032420018-0

MARKOV, B.L.; SOLOMENTSEV, S.L.

Thermal conductivity in a layer of lump materials. Izv.vys. ucheb.zav.; chern.met. no.3:176-183 '60.
(MIRA 13:4)

1. Moskovskiy institut stali.
(Metallurgical furnaces) (Heat--Conduction)

APPROVED FOR RELEASE: 09/19/2001 CIA-RDP86-00513R001032420018-0"

"APPROVED FOR RELEASE: 09/19/2001 CIA-RDP86-00513R001032420018-0

MARKOV, B.L., kand.tekhn.nauk

Calculating the melting of an endless plate with heat transmission through the melt. Sbor.Inst.stali no.39:92-103 '60. (MIRA 13:7)

1. Kafedra metallurgicheskikh pechey Moskovskogo ordena Trudovogo Krasnogo Znameni instituta stali im. I.V.Stalina.
(Liquid metals--Thermal properties)
(Heat--Transmission)

APPROVED FOR RELEASE: 09/19/2001 CIA-RDP86-00513R001032420018-0"

"APPROVED FOR RELEASE: 09/19/2001 CIA-RDP86-00513R001032420018-0

MARKOV, B.L.; PISKUNOV, A.A.; VOLKOVA, G.A.

Investigating the flow of gases in holding furnaces. [Sbor. trud. Nauch.-issl.inst.met. no.4:119-127 '61. (MIRA 15:11)

(Furnaces, Heating)
(Gas flow)

APPROVED FOR RELEASE: 09/19/2001 CIA-RDP86-00513R001032420018-0"

"APPROVED FOR RELEASE: 09/19/2001 CIA-RDP86-00513R001032420018-0

KRIVANDIN, Vladimir Alekseyevich, dots., kand. tekhn. nauk; MOLCHANOV, Nikolay Grigor'yevich, dots.; SOLOMENTSEV, Semen Leonidovich, inzh.; Prinimali uchastiye: MARKOV, B.L., kand. tekhn. nauk; FILIMONOV, Yu.P., inzh.; TEREN'KOV, B.P., kand. tekhn. nauk, retsenzent; VASIL'YEVA, R.A., inzh., retsenzent; LANOVSKAYA, M.R., red. izd-va; MIKHAYLOVA, V.V., tekhn. red.

[Metallurgical furnaces] Metallurgicheskie pechi. Pod obshchei red. V.A.Krivandina. Moskva, Gos. nauchno-tekhn.izd-vo lit-ry po chernoi i tsvetnoi metallurgii, 1962. 600 p. (MIRA 15:2)

(Metallurgical furnaces)

APPROVED FOR RELEASE: 09/19/2001 CIA-RDP86-00513R001032420018-0"

"APPROVED FOR RELEASE: 09/19/2001 CIA-RDP86-00513R001032420018-0

PISKUNOV, A.A., kand.tekhn.nauk; MARKOV, B.L., kand.tekhn.nauk

Heating circular cross section ingots in holding furnaces with slide tubes. Stal' 23 no.5:474-476 My '63. (MIRA 16:5)

1. Chelyabinskiy nauchno-issledovatel'skiy institut metallurgii.
(Steel ingots) (Furnaces, Heating)

APPROVED FOR RELEASE: 09/19/2001 CIA-RDP86-00513R001032420018-0"

"APPROVED FOR RELEASE: 09/19/2001 CIA-RDP86-00513R001032420018-0

L 64318-65 EWT(1)

ACCESSION NR: AP5020215 UR/0170/65/009/001/0064/0069
536.3

AUTHOR: Shevelev, V. M. 44,55 ; Markov, B. L. 44,55

32
29
B

TITLE: Measurement of the radiant properties of a flame 21,44,55 with a radiometer without means of condensation

SOURCE: Inzhenerno-fizicheskiy zhurnal, v. 9, no. 1, 1965, 64-69

TOPIC TAGS: flame, flame temperature, radiometer, thermal battery, heat transfer coefficient, black body radiation

ABSTRACT: The article gives construction details of a radiometer without means of condensation which gives sufficiently accurate measurements of flame properties, using the Schmidt method for calculation. A simple model was first constructed which consisted basically of a thermopile and three diaphragms or orifice plates. Experimental results from this type of radiometer were unrealistic. Analysis led to the conclusion that the reason for the errors in measurement was turbulent pulsations of the flame which, penetrating to the thermopile, increased

Card 1/2

APPROVED FOR RELEASE: 09/19/2001 CIA-RDP86-00513R001032420018-0"

"APPROVED FOR RELEASE: 09/19/2001 CIA-RDP86-00513R001032420018-0

L 64318-65

ACCESSION NR: AP5020215

3

the heat transfer coefficients at the electrode and at the "base", and intensified the field. A new model was constructed with a larger number of diaphragms to eliminate the effect of turbulent pulsations. The body of the instrument and the diaphragms were made of copper and the diaphragms were welded to the body. The article shows a schematic with construction details. Scatter of the readings, calibrated against a black body, does not exceed 1%. Preliminary evaluation of the Schmidt method in this instrument yields the following maximum possible errors: radiation of the flame, 1.5%; absorptive capacity of the flame, 6.5%; and, temperature of the flame, 5%. The accuracy achieved in practice was less, the scatter of the readings being 10-15%. Orig. art. has: 9 formulas, and 3 figures

ASSOCIATION: Institut metallurgii, Yuzhno-Ural'skogo sovnarkhoza, g. Chelyabinsk (Metallurgical Institute, South Ural National Economy Council)

44,55

SUBMITTED: 16Nov64 ENCL: 00 SUB CODE: GC, ID

NR REF SOV: 007 OTHER: 002

Card 2/2

APPROVED FOR RELEASE: 09/19/2001 CIA-RDP86-00513R001032420018-0"

"APPROVED FOR RELEASE: 09/19/2001 CIA-RDP86-00513R001032420018-0

L 21547-66

ACC NR: AP6007695 SOURCE CODE: UR/0413/66/000/003/0074/0074

AUTHOR: Shevelev, V. M.; Markov, B. L.

ORG: none

42
B

TITLE: A radiometer. Class 42, No. 178527

SOURCE: Izobreteniya, promyshlennyye obraztsy, tovarnyye znaki, no. 3, 1966, 74

TOPIC TAGS: radiometer, combustion chamber test

ABSTRACT: This Author's Certificate introduces a radiometer for measuring the radiation of a flame jet in a combustion chamber. The instrument contains a housing and two principal diaphragms which limit the radiation beam falling on the heat sensors located behind them. Measurement accuracy is improved by placing a set of auxiliary diaphragms between the two principal diaphragms. Two types of these auxiliary diaphragms are alternated: the first type has a central aperture with an axis at an angle to the optical axis of the radiometer, and the second type has a central aperture with an axis which coincides with the optical axis of the radiometer and two additional apertures along the periphery. Orig. art. has: 1 figure. [14]

UDC: 536.521.2

Card 1/2

APPROVED FOR RELEASE: 09/19/2001 CIA-RDP86-00513R001032420018-0"

"APPROVED FOR RELEASE: 09/19/2001 CIA-RDP86-00513R001032420018-0

L 21547-66

ACC NR: AP6007695

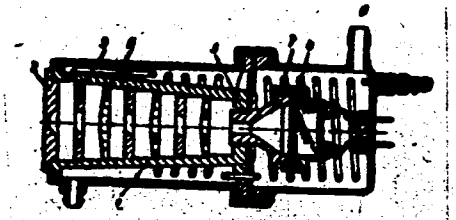

Fig. 1.

1—Housing; 2 and 3—principal diaphragms; 4—heat sensor; 5 and 6—auxiliary diaphragms; 7—heat sensor cavity.

SUB CODE: 13/ SUBM DATE: 11Jul63/ ATD PRESS: 4219

Card 2/2 BLC

APPROVED FOR RELEASE: 09/19/2001 CIA-RDP86-00513R001032420018-0"

"APPROVED FOR RELEASE: 09/19/2001 CIA-RDP86-00513R001032420018-0

L 38271-65 EWT(d)/EWT(m)/EWP(w)/EWA(h)/EWP(v)/T-2/EWP(k)/EWP(h)/EWP(1)
ACCESSION NR: AP5008149 Pf-4 EM S/0286/65/000/005/0029/0029

AUTHORS: Markov, B. M.; Osipov, V. F.; Vorob'yev, A. I.

23
B

TITLE: Instrument for mounting rotor blades of a turbine. Class 14, No. 168726

SOURCE: Byulleten' izobreteniy i tovarnykh znakov, no. 5, 1965, 29

TOPIC TAGS: turbine, turbine blade, gas turbine

ABSTRACT: This Author Certificate presents an instrument for mounting the rotor blades of a turbine, such as a gas turbine, by means of a shaft placed in grooves in the disk rim (see Fig. 1 on the Enclosure). To simplify the construction and increase the reliability, the blade stems and the disk rim have slots forming continuous grooves. These grooves are cut to place a split-ring held by a bushing rigidly clamped to the disk. Orig. art. has: 1 figure.

ASSOCIATION: Gosudarstvennyy soyuznyy mashinostroitel'nyy zavod (State Union Machine Construction Factory)

SUBMITTED: 10Feb64 ENCL: 01 SUB CODE: PR
NO REF SOV: 000 OTHER: 000
Card 1/1

APPROVED FOR RELEASE: 09/19/2001 CIA-RDP86-00513R001032420018-0"

"APPROVED FOR RELEASE: 09/19/2001 CIA-RDP86-00513R001032420018-0

OGANESYAN, Yu.TS.; LOBANOV, Yu.V.; MARKOV, B.N.; FLEROV, G.N.

[γ-Spektra in reactions with heavy ions] γ-spektry v reaktsiiakh s tiazhelymi ionami. Dubna, Ob"edinennyi institut iadernykh reaktsii, 1961. 16 p. (MIRA 14:11)

(Gamma rays—Spectra) (Nuclear reactions)

APPROVED FOR RELEASE: 09/19/2001 CIA-RDP86-00513R001032420018-0"

"APPROVED FOR RELEASE: 09/19/2001 CIA-RDP86-00513R001032420018-0

INDREASH, G.; LEBEV, A.F.; LOBANOV, Yu.V.; MARKOV, B.N.; OGANESYAN, Yu.TS.

[Study of γ-rays in the resonance system of a cyclotron] Issledovanie γ-luchei rezonansnoi sistemy tsiklotrona. Dubna, Ob"edinennyi in-t iadernykh issledovanii, 1962. 16 p. (MIRA 15:2)

(Gamma rays) (Cyclotron)

APPROVED FOR RELEASE: 09/19/2001 CIA-RDP86-00513R001032420018-0"

"APPROVED FOR RELEASE: 09/19/2001 CIA-RDP86-00513R001032420018-0

MARKOV, B.N.; PED', Ye.I.

Device for automatic chech of the dimensions of articles with broken surfaces. Izm.tekh. no.9:9-11 S '62. (MIRA 15:11)
(Measuring instruments)

APPROVED FOR RELEASE: 09/19/2001 CIA-RDP86-00513R001032420018-0"

"APPROVED FOR RELEASE: 09/19/2001 CIA-RDP86-00513R001032420018-0

OGANESYAN, Yu.T.; LOBANOV, Yu.V.; MARKOV, B.N.; FLEROV, G.N.

[Gamma radiation of high-spin nuclei] γ-izluchenie iader s vysokim spinom. Dubna, 1962. 13 p. (MIRA 16:10)
(Nuclear spin) (Gamma rays)

APPROVED FOR RELEASE: 09/19/2001 CIA-RDP86-00513R001032420018-0"

"APPROVED FOR RELEASE: 09/19/2001 CIA-RDP86-00513R001032420018-0

MARKOV, B.N.; PED', Ye. I.

Universal device for industrial dimension checking.
Izm. tekh. no.3; 9-12 Mr '64 (MIRA 17:8)

APPROVED FOR RELEASE: 09/19/2001 CIA-RDP86-00513R001032420018-0"

"APPROVED FOR RELEASE: 09/19/2001 CIA-RDP86-00513R001032420018-0

S/057/63/033/004/015/021
B163/B234

AUTHORS: Indreash, G., Linev, A. F., Lobanov, Yu., V., Markov, B. N., and Oganesyan, Yu. Ts.

TITLE: Investigation of the γ-rays from the resonance system of a cyclotron

PERIODICAL: Zhurnal tekhnicheskoy fiziki, v. 33, no. 4, 1963, 462 - 469

TEXT: In order to produce intense beams at a radius near to the final one in the 300 cm cyclotron for the acceleration of heavy ions of the laboratory for nuclear reactions ОИЯИ (OIYaI) it was calculated that at a frequency of 5 Mc/s a potential difference 2 V_0 = 300 - 350 kv between the dees should be applied. It was found, however, that for dee voltages above 100 to 150 kv a strong electronic load of the resonance circuit spoiled its quality factor, and that the dee potential was considerably reduced (by the factor ~1.5) when the external magnetic field was switched on. The distance between the dees and the cover of the chamber was 10 cm. The electron current over this gap was studied by recording the continuous spectrum of soft bremsstrahlung by means of a scintillation counter

Card 1/2

APPROVED FOR RELEASE: 09/19/2001 CIA-RDP86-00513R001032420018-0"

"APPROVED FOR RELEASE: 09/19/2001 CIA-RDP86-00513R001032420018-0

arranged outside the vacuum chamber, through a plexiglass window. The pulse recurrence frequency was varied between 10 and 150 c/s, the pulse duration from 0.2 to 3.0 m sec. The vacuum in the chamber varied from $1.5 \cdot 10^{-5}$ to $5 \cdot 10^{-6}$ torr. The γ-counting-rate N_γ increased by a factor of 10^6 to 10^7 when $2 V_0$ was increased from 50 to 300 kv. The spectral distribution of the γ-rays drops steeply at $E_\gamma = e V_0$ and becomes much less intense for $e V_0 < E_\gamma < 2e V_0$. The measurement of this spectral distribution can be used to measure the dee voltage with an accuracy of 3%. The dependence of N_γ on the magnetic field strength H is characterized by a steep ascent up to 1000 oersted, and a constant value of N_γ between 1 and 16 kiloersted. For high H, N_γ is proportional to the duty factor. No dependency of N_γ on the vacuum was observed. There are 5 figures.

SUBMITTED: January 13, 1962 (initially)
June 2, 1962 (after revision)

APPROVED FOR RELEASE: 09/19/2001 CIA-RDP86-00513R001032420018-0"

"APPROVED FOR RELEASE: 09/19/2001 CIA-RDP86-00513R001032420018-0

S/056/63/044/004/010/044
B102/B186

AUTHORS: Oganesyan, Yu. Ts., Lobanov, Yu. V., Markov, B. N., Flerov, G. N.

TITLE: Gamma radiation from nuclei with high spins

PERIODICAL: Zhurnal eksperimental'noy i teoreticheskoy fiziki, v. 44, no. 4, 1963, 1171 - 1179

TEXT: The authors measured the γ-ray spectra emitted on bombardment of Cu, Ta, W, and U targets with O^{16} and Ne^{22} ions accelerated to energies between 74 and 145 Mev, by means of a single-crystal scintillation spectrometer. For the reactions $Cu+Ne^{22}$ and $Ta+O^{16}$ the upper limits of the cascade γ-transition times were also determined. The projectile ions were accelerated in the 300-cm cyclotron of the Laboratoriya yadernykh reaktsiy OIYaI (Nuclear Reactions Laboratory of the OIYaI). The targets had natural isotope composition and were, at thicknesses of from 25 to 100μ, deposited on copper backings. The spectrometer consisted mainly of a NaI(Tl) crystal and a photomultiplier whose pulses were fed to a АИ-100/1 (AI-100/1) 100-channel pulse height analyzer. In some experiments the

Card 1/2

APPROVED FOR RELEASE: 09/19/2001 CIA-RDP86-00513R001032420018-0"

"APPROVED FOR RELEASE: 09/19/2001 CIA-RDP86-00513R001032420018-0

neutron yield was also measured by means of a stilbene crystal with an ФЭУ-33 (FEU-33) multiplier. The γ-counting rate was 100-300 pulses/sec for a flux of $\sim 10^{12}$ ions/sec. The spectrometer was positioned at an angle of 115° with respect to the ion beam. In all cases a prompt gamma radiation ($<10^{-9}$ sec) was observed with mean energies between 0.7 and 1.1 Mev. The upper limit of the cascade emission time was $(2-3)\cdot 10^{-9}$ sec. Up to 13 gamma quanta were emitted per compound nucleus decay. The spin effect on the decay mechanism is discussed separately for the various reactions. There are 6 figures and 1 table.

ASSOCIATION: Ob"yedinennyy institut yadernykh issledovaniy (Joint Institute of Nuclear Research)

SUBMITTED: November 16, 1962

APPROVED FOR RELEASE: 09/19/2001 CIA-RDP86-00513R001032420018-0"

"APPROVED FOR RELEASE: 09/19/2001 CIA-RDP86-00513R001032420018-0

MARKOV, B.N.; PED', Ye.I.

Selecting the parameters of a pneumatic measuring system according to given metrological characteristics. Izm. tekh. no.2:15-17 F '65. (MIRA 18:6)

APPROVED FOR RELEASE: 09/19/2001 CIA-RDP86-00513R001032420018-0"

"APPROVED FOR RELEASE: 09/19/2001 CIA-RDP86-00513R001032420018-0

L 58867-65 EWP(k)/EWT(d)/EWT(m)/EWP(h)/EWP(b)/EWP(l)/EWP(v)/EWP(t) Pf-4

ACCESSION NR: AP5014481 UR/0115/65/000/004/0021/0023

658.564:531.717

22
21
B

AUTHOR: Markov, B. N.; Ped', Ye. I.; Prokhorova, N. A.

TITLE: Device for automatic control of stepped shafts during their grinding

14 18

SOURCE: Izmeritel'naya tekhnika, no. 4, 1965, 21-23

TOPIC TAGS: shaft grinding, size control

ABSTRACT: The development of a pneumatic gage for controlling the size of large stepped shafts in the course of their grinding is reported. The shaft is measured by prisms 1 hinged on lever 2, see Fig. 1 of the Enclosure; compressed air taken from the plant air system enters gage 3 and then, via gap z, is released into the atmosphere. Pressure in the gage chamber depends on the value of z. As the grinding allowance is taken off, the pressure in 3 decreases, and point 5 moves until the upper-chamber pressure becomes equal to the lower-chamber pressure. The maximum z that permits measurement is 0.35 mm; scale resolution, 0.2 mm. The instrument is being tested on a grinding machine that handles 235—165-mm shafts. Orig. art. has: 1 figure and 8 formulas.

Card 1/3

APPROVED FOR RELEASE: 09/19/2001 CIA-RDP86-00513R001032420018-0"

"APPROVED FOR RELEASE: 09/19/2001 CIA-RDP86-00513R001032420018-0

L 58867-65

ACCESSION NR: AP5014481

ASSOCIATION: Moskovskiy stankoinstrumental'nyy institut (Moscow Machine and Tool Institute)

SUBMITTED: 00 ENCL: 01 SUB CODE: IE

NO REF SOV: 001 OTHER: 000

Card 2/3

APPROVED FOR RELEASE: 09/19/2001 CIA-RDP86-00513R001032420018-0"

"APPROVED FOR RELEASE: 09/19/2001 CIA-RDP86-00513R001032420018-0

L 58867-65
ACCESSION NR: AP5014481

ENCLOSURE: 01

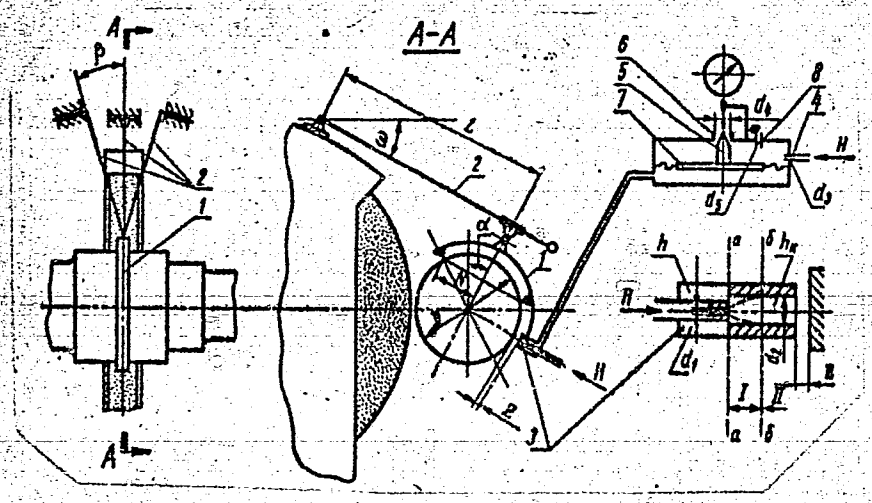

Fig. 1. Pneumatic device for controlling stepped-shaft diameter during the process of grinding

Card 3/3

APPROVED FOR RELEASE: 09/19/2001 CIA-RDP86-00513R001032420018-0"

"APPROVED FOR RELEASE: 09/19/2001 CIA-RDP86-00513R001032420018-0

L 29280-66 EWT(m)/EWP(t)/ETI IJP(c) JD

ACC NR: AP6019332 SOURCE CODE: UR/0367/66/003/003/0455/0456

33
B

AUTHOR: Markov, B. N.; Plev, A. A.; Polikanov, S. M.; Flerov, G. N.

ORG: Joint Institute of Nuclear Research (Ob"yedinennyy institut yadernykh issledovaniy)

TITLE: Experiments on the synthesis of a spontaneously fissionable isomer in the Am sup 241 (n, gamma) Am sup 242 reaction

19

SOURCE: Yadernaya fizika, v. 3, no. 3, 1966, 455-456

TOPIC TAGS: americium, isomer, thermal neutron

ABSTRACT: The creation of a spontaneously fissionable Am^{242m} isomer in reactions with thermal neutrons was investigated. It is shown that the cross-section of this process is less than $3 \cdot 10^{-28}$ cm^2 and the isomer ratio $\alpha < 5 \cdot 10^{-7}$. Authors' thank K. A. Gavrilov for preparation of the target and A. M. Kucher and I. V. Saratov for help in conducting the experiments. [Based on authors' Eng. abst.] [JPRS]

SUB CODE: 20 / SUBM DATE: 10Sep65 / ORIG REF: 004 / OTH REF: 003

Card 1/1 CC

APPROVED FOR RELEASE: 09/19/2001 CIA-RDP86-00513R001032420018-0"

"APPROVED FOR RELEASE: 09/19/2001 CIA-RDP86-00513R001032420018-0

ACC NR: AP7012408 SOURCE CODE: UR/0367/67/005/001/0022/0025

AUTHOR: Gangrskiy, Yu. P.; Markov, B. N.; Polikanov, S. M.; Yungklaussen, G. -- Jungclaussen, H.

ORG: Joint Institute for Nuclear Research (Ob"yedinennyy institut yadernykh issledovaniy)

TITLE: Investigation of the reaction U^{238} - B^{11} leading to a spontaneously fissionable isomer Am^{242}

SOURCE: Yadernaya fizika, v. 5, no. 1, 1967, 22-25

TOPIC TAGS: americium, boron, nuclear isomer, nuclear spin

SUB CODE: 20,11

ABSTRACT: The reaction $U^{238}+B^{11}$ leading to the ground (1-), isomeric (5-) and spontaneously fissionable states of Am^{242} was investigated. The excitation functions have been obtained for the ground and spontaneously fissionable states. For the 5- state, the averaged cross section has been measured in the energy range 50-68 MeV. The spin of the spontaneously fissionable state was evaluated by comparing the cross sections for the production of Am^{242} in various states The authors thank G. N. Flerov for constant interest in the work, V. P. Perelygin and coworkers of his group for processing and examining the glass detectors, K. A. Gavrilov for preparing the targets, and B. A. Gvozdev

Card 1/2

0932 1339

APPROVED FOR RELEASE: 09/19/2001 CIA-RDP86-00513R001032420018-0"

"APPROVED FOR RELEASE: 09/19/2001 CIA-RDP86-00513R001032420018-0

ACC NR: AP7012408

and S. A. Pleshukovaya for the chemical separation of Am and Cm. Orig. art. has: 3 figures and 1 formula. [Based on authors' Eng. Abst.] [JPRS: 40,393]

2/2

APPROVED FOR RELEASE: 09/19/2001 CIA-RDP86-00513R001032420018-0"

"APPROVED FOR RELEASE: 09/19/2001 CIA-RDP86-00513R001032420018-0

ULITOVSKIY, Boris Alekseyevich; MARKOV, B.P., kand.tekhn.nauk, retsenzent; LEBEDEV, N.S., kand.tekhn.nauk, retsenzent; GRIBANOV, V.I., kand. tekhn.nauk, red.; SIMONOVSKIY, N.Z., red.izd-va; FRUMKIN, P.S., tekhn.red.

[The U14 and U12 diesel generator units] Dizel'-generatornye ustanovki U14 i U12. Moskva, Gos.nauchno-tekhn.izd-vo mashinostroit. lit-ry, 1960. 141 p. (MIRA 13:5)
(Electric generators)

APPROVED FOR RELEASE: 09/19/2001 CIA-RDP86-00513R001032420018-0"

"APPROVED FOR RELEASE: 09/19/2001 CIA-RDP86-00513R001032420018-0

MARKOV, B.P., inzhener

Testing joints used in precast reinforced concrete slabs. Transp. stroi.5 no.6:24-25 Ag'55. (MLRA 8:12)

1. Nachal'nik Mostolaboratorii Nauchno-issledovatel'skogo instituta zhelezmodorozhnogo transporta. (Concrete slabs)

APPROVED FOR RELEASE: 09/19/2001 CIA-RDP86-00513R001032420018-0"

"APPROVED FOR RELEASE: 09/19/2001 CIA-RDP86-00513R001032420018-0

MARKOV, B.P., inzhener.

Precast reinforced concrete slabs used in combination with metal girders. Bet.i zhel.-bet. no.6:212-214 Je '56. (MLRA 9:8)
(Bridges, Concrete) (Concrete slabs)

APPROVED FOR RELEASE: 09/19/2001 CIA-RDP86-00513R001032420018-0"

"APPROVED FOR RELEASE: 09/19/2001 CIA-RDP86-00513R001032420018-0

MARKOV, B.P., inzh.

Rebuilding small metal bridges. Trudy NIIZHT no.24:249-257 '61. (MIRA 16:5)

(Railroad bridges--Maintenance and repair)

APPROVED FOR RELEASE: 09/19/2001 CIA-RDP86-00513R001032420018-0"

"APPROVED FOR RELEASE: 09/19/2001 CIA-RDP86-00513R001032420018-0

MARKOV, B.P., inzh.

Testing the scaffold bridge for the conveying of concrete at the Bratsk Hydroelectric Power Station. Gidr.stroi. 32 no.4:12-14 Ap '62. (MIRA 15:4)
(Bratsk Hydroelectric Power Station) (Trestles)

APPROVED FOR RELEASE: 09/19/2001 CIA-RDP86-00513R001032420018-0"

"APPROVED FOR RELEASE: 09/19/2001 CIA-RDP86-00513R001032420018-0

MARKOV, D.

Device for dismantling gearboxes in repairing clutches.
avt. transp. 37 no.9:24 S '59. (MIRA 12:12)
(Automobiles--Transmission devices)

APPROVED FOR RELEASE: 09/19/2001 CIA-RDP86-00513R001032420018-0"

"APPROVED FOR RELEASE: 09/19/2001 CIA-RDP86-00513R001032420018-0

MARKOV, D.

USSR/ Electronics - Radio receivers

Card 1/1 Pub. 89 - 26/31

Authors : Markov, D., and Dmitriev, S.

Title : Superheterodyne battery receiver

Periodical : Radio 11, 53-55, Nov 1954

Abstract : A simple, four-tube battery-type superheterodyne receiver, assembled mainly from parts from the "Moskvich" receiver is described. The receiver operates on long (723-2000 m) and medium (187-578 m) wave-band ranges. Particulars pertaining to the receiver's parameters are set forth. A general layout diagram including a circuit diagram showing the arrangement of parts and featuring the separate stages in each of the bands, the various types of capacitors filters, oscillating circuits, and the tubes used, is presented. The description of the chassis is given along with tabulated detailed data on transformer coil-windings. The types of storage batteries used and their designations and the voltages required for normal operation and for increasing the volume are also given. Circuit diagram; illustrations; table.

Institution : ...
Submitted : ...

APPROVED FOR RELEASE: 09/19/2001 CIA-RDP86-00513R001032420018-0"

"APPROVED FOR RELEASE: 09/19/2001 CIA-RDP86-00513R001032420018-0

MARKOV, D.

MARKOV, D. Static electricity as a cause of fires. p. 38.

Vol. 5, No. 9, 1956
LEKA PROMISHLENOST.
TECHNOLOGY
Sofiia, Bulgaria

So: East European Accession, Vol. 6, No. 3, March 1957

APPROVED FOR RELEASE: 09/19/2001 CIA-RDP86-00513R001032420018-0"

"APPROVED FOR RELEASE: 09/19/2001 CIA-RDP86-00513R001032420018-0

ARSHINKOV, I.; MARKOV, D.

Tetanus following excision biopsy. Suvr. med. (Sofia) 15 no.5:32-33 '64

APPROVED FOR RELEASE: 09/19/2001 CIA-RDP86-00513R001032420018-0"

"APPROVED FOR RELEASE: 09/19/2001 CIA-RDP86-00513R001032420018-0

MARKOV, Dimitur (Sofiia)

Experiments in mechanics. Mat i fiz Bulg 5 no.3:62-64 My-Je '62.

APPROVED FOR RELEASE: 09/19/2001 CIA-RDP86-00513R001032420018-0"

"APPROVED FOR RELEASE: 09/19/2001 CIA-RDP86-00513R001032420018-0

MARKOV, D.

The success of the matter is decided here. Zhil.-kom. khoz. 13 no.1:4-5 '63. (MIRA 16:3)

(Moscow—Water—Distribution)

APPROVED FOR RELEASE: 09/19/2001 CIA-RDP86-00513R001032420018-0"

"APPROVED FOR RELEASE: 09/19/2001 CIA-RDP86-00513R001032420018-0

Markov, D.A.

SUBJECT: USSR/Welding 135-4-10/15

AUTHOR: Markov D.A., Engineer

TITLE: To the Question of Modernizing the Welding Equipment for Light Alloys. (K voprosu modernizatsii oborudovaniya dlya svarki legkikh splavov).

PERIODICAL: "Svarochnoye Proizvodstvo", 1957, #4, p 25 (USSR).

ABSTRACT: The short article represents a letter in response to the article by GLEBOV and RADASHKOVICH in "Svarochnoye Proizvodstvo" # 8, 1956, dealing with equipment modernization.

The author agrees that production of new machines and modernization of the welder "МТП-300А" are necessary and important, but has the opinion that the equipment already existing should be modernized first, especially as the new, high-power equipment is short in supply. GLEBOV and RADASHKOVICH just listed general directions for modernization, but the industrial plants need definite instructions, plans and drawings for modernizing the existing equipment. It is known that the "Elektrik" plant has long ago developed a welding current stabilizer for the spot and roller welding machines, but it is still missing in

Card 1/2

APPROVED FOR RELEASE: 09/19/2001 CIA-RDP86-00513R001032420018-0"

"APPROVED FOR RELEASE: 09/19/2001 CIA-RDP86-00513R001032420018-0

125-4-10/15

TITLE: To the Question of Modernizing the Welding Equipment for Light Alloys. (K voprosu modernizatsii oborudovaniya dlya svarki legkikh splavov).

the consumer-plants which use the "НИАТ" stabilizer.

The author's plant has modernized the welder "МТП-200", including the pressure system, and raised the short-duration power by the method recommended in the article by BALKOVETS and CHULOSHNIKOV in # 12 of "Svarochnoye Proizvodstvo" in 1955, as well as introduced the electronic welding current modulator developed by "НИАТ". After modernization, the device welds without defects the light alloys "Д16Т" and "АМГ" in depths of 2.5+2.5 mm. The power of the roller-welder "АТТ" of 150 kva is increased by connecting it with the welding transformer "КТ-34". The device welds light alloys in depth 1.5+1.5 mm. Neither the welder "МТП-200", nor the roller-welder show any overheating of the windings.

ASSOCIATION: Not stated.
PRESENTED BY:
SUBMITTED:
AVAILABLE: At the Library of Congress.
Card 2/2

APPROVED FOR RELEASE: 09/19/2001 CIA-RDP86-00513R001032420018-0"

"APPROVED FOR RELEASE: 09/19/2001 CIA-RDP86-00513R001032420018-0

MARKOV, Dmitriy Aleksandrovich, inzh.; PALEVSKIY, S.A., inzh., nauchnyy red. Prinimal uchastiye POLUEKTOV, B.M.[deceased]; VDOVENKO, Z.I., red. izd-va; NAUMOVA, G.D., tekhn. red.

[Technology and organization of building and assembling operations] Tekhnologiia i organizatsiia stroitel'no-montazhnykh rabot. Moskva, Gos. izd-vo lit-ry po stroit., arkhit. i stroit. materialam, 1961. 483 p. (MIRA 15:2)
(Building)

APPROVED FOR RELEASE: 09/19/2001 CIA-RDP86-00513R001032420018-0"

"APPROVED FOR RELEASE: 09/19/2001 CIA-RDP86-00513R001032420018-0

MARKOV, D. A

MD

√ The value of anticoagulants in experimental methyl alcohol poisoning. D. A. Markov and N. A. Romantsova. *Eksptl. i. Klin. Nevrol., Izdatelstvo Akad. Nauk Belorussi. S.S.R.* (Minsk) 1953, 83-92; *Referat. Zhur. Khim. Biol. Khim.* 1955, No. 2937.—The injection into rabbits of sublethal doses of MeOH lowers the blood pH, shortens the blood coagulation time, and increases its prothrombin content. Intravenous injection of 5% Na citrate or of 1% inulin counteracts the effects of MeOH, improves the condition of the poisoned animals, and increases their survival chances.

B. S. Levine

APPROVED FOR RELEASE: 09/19/2001 CIA-RDP86-00513R001032420018-0"

"APPROVED FOR RELEASE: 09/19/2001 CIA-RDP86-00513R001032420018-0

MARKOV, D.A.

[Epilepsy and its treatment] Epilepsii i ikh lechenie. Minsk, Izd-vo Akademii nauk BSSR, 1954. 294 p. (MIRA 10:2)
(EPILEPSY)

APPROVED FOR RELEASE: 09/19/2001 CIA-RDP86-00513R001032420018-0"

"APPROVED FOR RELEASE: 09/19/2001 CIA-RDP86-00513R001032420018-0

MARKOV, D.A.

[Chronaximetry in clinical treatment; present-day problems] Khronaksimetriia v klinike; nekotorye aktual'nye voprosy. Minsk, Izd-vo akademii nauk BSSR, 1956. 209 p. (MLRA 10:8)
(CHRONAXIA)

APPROVED FOR RELEASE: 09/19/2001 CIA-RDP86-00513R001032420018-0"

"APPROVED FOR RELEASE: 09/19/2001 CIA-RDP86-00513R001032420018-0

MARKOV, D.A., professor; PAVLOVETS, M.V.

Sessions of the neurosurgical section of the White Russian branch of All-Union Society of Neuropathologists and Psychiatrists. Vop. neirokhir. 20 no.4:48-52 Jl-Ag '56. (MIRA 9:11)
(NERVOUS SYSTEM--SURGERY)

APPROVED FOR RELEASE: 09/19/2001 CIA-RDP86-00513R001032420018-0"

"APPROVED FOR RELEASE: 09/19/2001 CIA-RDP86-00513R001032420018-0

MARKOV, D.A.; MEL'NIKOV, I.I.

Work fo the White Russian Society of Physiotherapeutists and Health Resort Specialists in 1955. Vop.kur.fizioter. i lech.fiz.kul't. 21 no.2:91-92 Ap-Je '56. (MLRA 9:9)

(WHITE RUSSIA--THERAPEUTICS, PHYSIOLOGICAL)

APPROVED FOR RELEASE: 09/19/2001 CIA-RDP86-00513R001032420018-0"

"APPROVED FOR RELEASE: 09/19/2001 CIA-RDP86-00513R001032420018-0

MARKOV, D.A.; MEL'NIKOV, N.I.

Work of the White Russian Society of Physiotherapists and Specialists in Resort Therapy. Vop.kur., fizioter. i lech.fiz.kul't. 22 no.3: 93-94 My-Je '57. (MIRA 11:1)

1. Predsedatel' pravleniya Belorusskogo obshchestva fizioterapevtov i kurortologov, deystvitel'nyy chlen Akademii nauk BSSR (for Markov). 2. Sekretar' pravleniya Belorusskogo obshchestva fizioterapevtov i kurortologov (for Mel'nikov)

(PHYSICAL THERAPY)
(HEALTH RESORTS, WATERING PLACES, ETC.)

APPROVED FOR RELEASE: 09/19/2001 CIA-RDP86-00513R001032420018-0"

"APPROVED FOR RELEASE: 09/19/2001 CIA-RDP86-00513R001032420018-0

MALKOV, D.A., prof.; PAVLOVETS, M.V.

Meetings of the White Russian Society of Neurosurgeons; report for 1956-1957. Vop.neirokhir. 22 no.5:59-60 S-O '58. (MIRA 12:1)

(WHITE RUSSIA--NEUROSURGICAL SOCIETIES)

APPROVED FOR RELEASE: 09/19/2001 CIA-RDP86-00513R001032420018-0"

"APPROVED FOR RELEASE: 09/19/2001 CIA-RDP86-00513R001032420018-0

MARKOV, D.A., MEL'NIKOV, N.I.

Work of the White Russian Society of Physical Therapists and Resort Specialists in 1957. Vop.kur.fizioter. i lech.fiz. kul't. 23 no.4:383 Jl-Ag '58 (MIRA 11:8)
(WHITE RUSSIA--THERAPEUTICS, PHYSIOLOGICAL--SOCIETIES)

APPROVED FOR RELEASE: 09/19/2001 CIA-RDP86-00513R001032420018-0"

"APPROVED FOR RELEASE: 09/19/2001 CIA-RDP86-00513R001032420018-0

BULYGIN, I.A., otv.red.; GOLUB, D.M.; KOLESNIKOV, M.S.; MARKOV, D.A.; CHERKASOVA, L.S.

[Materials of the scientific session dedicated to the fortieth anniversary of the White Russian S.S.R., January 1959] Materialy nauchnoi sessii, posviashchennoi 40-letiiu Belorusskoi SSR, ianvar' 1959 god. Minsk, 1959. 145 p. (MIRA 12:11)

1. Akademiya nauk BSSR. Minsk. Institut fiziologii.
(PHYSIOLOGY)

APPROVED FOR RELEASE: 09/19/2001 CIA-RDP86-00513R001032420018-0"

"APPROVED FOR RELEASE: 09/19/2001 CIA-RDP86-00513R001032420018-0

MARKOV, D. A.

24(7),24(0) SOV/30-59-1-9/37

AUTHOR: Stepanov, B. I., Academician AS Belorusskaya SSR

TITLE: Investigations by Belorussian Scientists in the Field of Spectroscopy and Luminescence (Raboty belorusskikh uchenykh po spektroskopii i lyuminestsentsii)

PERIODICAL: Vestnik Akademii nauk SSSR, 1959, Nr 1, pp 68-76 (USSR)

ABSTRACT: These investigations are being carried out at the Institut fiziki i matematiki (Institute of Physics and Mathematics) and the fizicheskiy fakul'tet Belorusskogo universiteta (Physics Department, Belorussian University) under the direction of B. I. Stepanov, A. N. Sevchenko, M. A. Yel'yashevich, Academicians AS BSSR, and F. I. Fedorov, Corresponding Member, Academy of Sciences, BSSR. In the field of theoretical spectroscopy, the investigations by P. A. Apanasevich, B. I. Stepanov are mentioned. Further, the following investigations are indicated:

A. P. Prishivalko, B. I. Stepanov developed a theory of dispersion light filters.
N. A. Borisevich, Ya. S. Khvashchevskaya, I. P. Leptserich examined, by experiment, dispersion light filters for the infrared range.
A. P. Prishivalko analysed the accuracy and the field of application of existing determination methods of optical constants of dispersed and not dispersed materials.
I. G. Nekrashevich, A. A. Labuda, Ye. G. Martynov obtained important results concerning the kinetics of one single spark discharge (spectral intensity and discharge temperature).
A. A. Yankovskiy, V. S. Furakov examined the mutual influence of elements in spectrum analysis, and explained the methods for their elimination.
G. V. Ovechkin suggested a series of methods to eliminate the influence of third elements.
G. V. Ovechkin, N. P. Krivosheyev succeeded in working out a control method of benzyl penicillin in ordinary penicillin.

Card 5/8

N. A. Borisevich, N. I. Nikarevich, A. I. Skryan examined the infrared spectra of resinous products.
N. A. Borisevich, V. I. Panasevich, I. P. Gurinovich examined a series of structural peculiarities of alcohol oxides.
N. A. Borisevich worked out a luminescence method for the determination of the germinating power of the seed of some kinds of trees.
A. Ye. Prokopchuk obtained good results by the use of luminescence analysis in dermatology.
S. S. Kharamonenko examined the absorption spectra of the albuminous polysaccharide complexes.
D. A. Markov used spectral methods for analyzing albuminous fractions in the blood.
N. N. Pavlyuchenko, G. A. Lazerko, carried out an extensive spectrophotometrical examination of the formation of molecular and complex compounds in solutions.
N. A. Sevchenko spectroscopically examined the structure of various silicas.
B. I. Stepanov, A. N. Prin carried out theoretical investigations of the vibrational spectra of various silicate crystals

Card 6/8

APPROVED FOR RELEASE: 09/19/2001 CIA-RDP86-00513R001032420018-0"

"APPROVED FOR RELEASE: 09/19/2001 CIA-RDP86-00513R001032420018-0

MAKKOV, D.A.; GINZBURG, S.Ye.

Functional state of the cerebral cortex in hypertension as revealed by electroencephalograms. Trudy Inst.fiziol. AN BSSR 3:93-102 '59. (MIRA 13:7)

1. Laboratoriya klinicheskoy neyrofiziologii Instituta fiziologii AN BSSR.
(CEREBRAL CORTEX) (HYPERTENSION)

APPROVED FOR RELEASE: 09/19/2001 CIA-RDP86-00513R001032420018-0"

"APPROVED FOR RELEASE: 09/19/2001 CIA-RDP86-00513R001032420018-0

MARKOV, D.A., akademik; PAVLOVETS, M.V.

Meetings of the White Russian Society of Neurosurgeions. Bop.neirokhir. 23 no.5:54-55 S-O '59. (MIRA 12:11)

1. Predsedatel' Belorusskogo obshchestva neyrokhirurgov AN BSSR (for Markov).

(WHITE RUSSIA--NEUROSURGICAL SOCIETIES)

APPROVED FOR RELEASE: 09/19/2001 CIA-RDP86-00513R001032420018-0"

"APPROVED FOR RELEASE: 09/19/2001 CIA-RDP86-00513R001032420018-0

MARKOV, D.A., prof.; MEL'NIKOV, N.I.

Work of the White Russian Society of Physical Therapists and Health Resort Specialists in 1958. Vop. kur., fizioter. i lech. fiz. kul't. 24 no. 4:373-374 Jl-Ag '59. (MIRA 13:8)

1. Predsedatel' Belorusskogo Obshchestva fizioterapevtov i kurrortologov (for Markov). 2. Sekretar' Belorusskogo Obshchestva fizioterapevtov i kurortologov (for Mel'nikov).
(WHITE RUSSIA—THERAPEUTIC SOCIETIES)

APPROVED FOR RELEASE: 09/19/2001 CIA-RDP86-00513R001032420018-0"

"APPROVED FOR RELEASE: 09/19/2001 CIA-RDP86-00513R001032420018-0

MARKOV, D.A.; LEONOVICH, A.L.

Unsolved problems with etiology, pathogenesis, and therapy of multiple sclerosis. Zhur. nevr. i psikh 59 no.5:513-517 '59. (MIRA 12:7)

1. Kafedra nervnykh bolezney (zav. - prof. D.A. Markov) Belorrusskogo instituta usovershenstvovaniya vrachey, Minsk.
(MULTIPLE SCLEROSIS,
etiol., pathogen. & ther. (Rus))

APPROVED FOR RELEASE: 09/19/2001 CIA-RDP86-00513R001032420018-0"

"APPROVED FOR RELEASE: 09/19/2001 CIA-RDP86-00513R001032420018-0

PHASE I BOOK EXPLOITATION SOV/5174

Pravda, Moscow.

Vtoroy Sovetskiy kosmicheskiy korabl'; materialy, opublikovannyye v gazete "Pravda" (The Second Soviet Cosmic Ship; Materials Published in the Newspaper "Pravda") Moscow, 1960. 198 p. 50,000 copies printed.

Resp. for this Publication: V. Reut and V. Smirnov; Tech. Ed.: V. Yagodkina.

PURPOSE: This book is intended for the general reader.

COVERAGE: The book is a compilation of articles which appeared in the newspaper Pravda after the launching, orbiting, and recovery of the capsule of the Soviet 4,600 kg spaceship on August 19, 1960. The articles give some details of scientific research undertaken in this flight in the fields of biology, cytology, genetics, cosmic radiation, solar radiation, ultraviolet radiation, and radiation levels. A description and three photos of the capsule are given. No personalities are mentioned. There are no references.

Limitless Perspectives. V. Fedynskiy, Doctor of Physical and Mathematical Sciences 90

Care for Future Astronauts. D. Markov, Academician of the Academy of Sciences BSSR [Head of the Chemical and Physiological Laboratory of the Institut Fiziologii (Institute of Physiology), Minsk] 91

Forerunner of Great Conquests. A. Alikhan'yan, Corresponding Member of the Academy of Sciences USSR, [Director of the Fizicheskiy institut AN Armyanskoy SSSR (Physical Institute of the Academy of Sciences Armyanskaya SSR)] 93

Television "Eye" in Outer Space. P. Fedorov 95

Two Flights. Leonid Sobolev 98

Beginning of a New Era. Ol'ga Forsh 100

Meeting With the First "Astronauts." V. Smirnov, V. Shirokov 102

Event Which Surprised the World. D. Martynov, Professor, [Director of the Gosudarstvennyy astronomicheskiy institut imeni Shternberga (State Astronomical Institute imeni Shternberg)] 104

Creative Genius of the Builders of Communism. Editorial in Pravda 108

Solution of a Very Important Problem. V. Ambartsumyan, Academician 113

Enormous Success of Soviet Science and Engineering. Press Conference in the Academy of Sciences USSR 115

Biological Program of the Spaceship. I. Sisakyan, Academician 130

On the Eve of Manned Space Flight. V. Parin, Active Member of the Academy of Medical Sciences USSR 137

Into the Depths of the Microcosmos. S. Vernov, Corresponding Member of the Academy of Sciences USSR; N. Grigorov, Professor 143

14

APPROVED FOR RELEASE: 09/19/2001 CIA-RDP86-00513R001032420018-0"

"APPROVED FOR RELEASE: 09/19/2001 CIA-RDP86-00513R001032420018-0

MARKOV, D.A., akademik

Urgent problems in the vascular pathology of the brain. Zdrav. Belor. 6 no. 10:3-8 O '60. (MIRA 13:10)

1. AN BSSR.

(BRAIN--DISEASES)

APPROVED FOR RELEASE: 09/19/2001 CIA-RDP86-00513R001032420018-0"