"APPROVED FOR RELEASE: 07/12/2001 CIA-RDP86-00513R001032730002-3

MASLENNIKOV, N.D., kand. tekhn. nauk; MYSHONKOV, N.I.; MASLOV, A.A.

Treating liquid pig iron with magnesium salts. Sbor. trud. UNIIM no.9:255-265 '64 (MIRA 18:1)

APPROVED FOR RELEASE: 07/12/2001 CIA-RDP86-00513R001032730002-3"

"APPROVED FOR RELEASE: 07/12/2001 CIA-RDP86-00513R001032730002-3

MASLENNIKOV, N.D., kand. tekhn. nauk; VORONINA, V.A.

Effect of temperature factors on the formation of stony fracture in alloyed steel castings. Sbor. trud. UNIIM no.9: 266-280 '64 (MIRA 18:1)

APPROVED FOR RELEASE: 07/12/2001 CIA-RDP86-00513R001032730002-3"

"APPROVED FOR RELEASE: 07/12/2001 CIA-RDP86-00513R001032730002-3

MASLENNIKOV, N.D., kand. tekhn. nauk; VYGODSKIY, I.A.; GIRSH, A.A.

Reducing burning-on in steel casting in rapid hardening molding sand mixtures. Sbor. trud. UNIIM no.9:281-294 '64 (MIRA 18:1)

APPROVED FOR RELEASE: 07/12/2001 CIA-RDP86-00513R001032730002-3"

"APPROVED FOR RELEASE: 07/12/2001 CIA-RDP86-00513R001032730002-3

MASLENNIKOV, N.D., kand. tekhn. nauk; VORONINA, V.A.; MURAV'YEV, V.N.

Investigating the effect of nonmetallic inclusions and the conditions of hardening on the nature of stony fracture in alloyed steel castings. Sbor. trud. UNIIM no.9:295-311 '64 (MIRA 18:1)

APPROVED FOR RELEASE: 07/12/2001 CIA-RDP86-00513R001032730002-3"

"APPROVED FOR RELEASE: 07/12/2001 CIA-RDP86-00513R001032730002-3

MASLENNIKOV, N.D.; VORONINA, V.A.

Investigating the effect of technological factors on granular fractures in alloyed steel castings. Sbor.trud. UNIIM no.11:232-243 '65.

(MIRA 18:11)

APPROVED FOR RELEASE: 07/12/2001 CIA-RDP86-00513R001032730002-3"

"APPROVED FOR RELEASE: 07/12/2001 CIA-RDP86-00513R001032730002-3

KIRICHENKO, D.V.; MASLENNIKOV, N.D.; VESELYANSKIY, Yu.S.; GOLIK, V.P.

Studying the mineralogical composition of the finely divided fraction of Peskovka deposit clay. Sbor.trud. UNIIM no.11:244-249 '65. (MIRA 18:11)

APPROVED FOR RELEASE: 07/12/2001 CIA-RDP86-00513R001032730002-3"

"APPROVED FOR RELEASE: 07/12/2001 CIA-RDP86-00513R001032730002-3

GLADKIKH, A.N., kand.tekhn.nauk; MASLENNIKOV, N.I.

Automatic production lines for manufacturing fastening parts. Mashinostroitel' no.6:8-10 Je '60. (MIRA 13:8)

1. Glavnyy inzhener zavoda "Krasnaya Etna" (for Maslennikov).
(Machine-tool industry--Technological innovations)
(Automation)

APPROVED FOR RELEASE: 07/12/2001 CIA-RDP86-00513R001032730002-3"

"APPROVED FOR RELEASE: 07/12/2001 CIA-RDP86-00513R001032730002-3

S/182/60/000/010/011/015/XX
A161/A030

AUTHORS: Gladkikh, A.N.; ~~Maslennikov, N.I.~~

TITLE: Calculation of Passes and Tools for Production of Bolts in Automatic Machine Lines

PERIODICAL: Kuznechno-shtampovochnoye proizvodstvo, 1960, No. 10, pp. 21 - 24

TEXT: Automatic machine lines producing bolts with hexagonal heads are working at the plants "Rostsel'mash", imeni Oktyabr'skoy revolyutsii (imeni October Revolution) in Odessa, "Krasnaya zvezda" in Kirovograd; the Combine Plant imeni Stalin in Taganrog, the Zavod metalloizdely (Metal Products Plant) in Magnitogorsk. All these lines have one drawback in common - they include automatic machines trimming the bolt head faces, and about 8 - 10% of metal is wasted in cuttings. The plant "Krasnaya Etna" has nine such lines in which steel bolts with hexagon head are produced in closed dies without trimming. The line (Fig. 2) includes a two-stroke heading machine (I) for preliminary forming of heads, a single-stroke heading machine (II) for final head forming, and a thread-rolling machine (III). The transformations in the three machines are illustrated (Fig. 1). Inter-operation annealing is not obligatory for the "30" steel from which bolts are made,

Card 1/6

APPROVED FOR RELEASE: 07/12/2001 CIA-RDP86-00513R001032730002-3"

"APPROVED FOR RELEASE: 07/12/2001 CIA-RDP86-00513R001032730002-3

S/182/60/000/010/011/015/XX
A161/A030

Calculation of Passes and Tools for Production of Bolts in Automatic Machine Lines

and it is not used since bolts nevel fail in use. The transporting mechanisms in the line consist of two vertical bucket elevators and four inclined chutes. Stopping of one or other machine for resetting does not stop the other for they work up bolts stored in their hoppers, or they work filling the hoppers. The "Krasnoye Sormovo" Plant produces three bolt sizes "M12", "M14", and "M16" using the same technology. The method results in a 20% cut of production costs compared with work on separate machines. Heading bed dies for the formation of final hexagonal head are made from У10А (U10A) steel for "M12" bolts and last for 30,000 pieces, and the punches for 26,000 pieces; dies with tungsten-cobalt cermet inserts used for "M10" and "M8" bolts last for 65,000 and 75,000 pieces. The information includes calculations of the blank diameter; of die dimensions and tolerance for the second pressing stage (Fig. 1, b); of the die impression dimensions for the last stage, i.e., formation of the hexagonal bolt head. Detailed drawings of bed dies and punches are included. There are 7 figures.

Card 2/6

APPROVED FOR RELEASE: 07/12/2001 CIA-RDP86-00513R001032730002-3"

"APPROVED FOR RELEASE: 07/12/2001 CIA-RDP86-00513R001032730002-3

S/182/60/000/010/011/015/XX
A161/A030

Calculation of Passes and Tools for Production of Bolts in Automatic Machine Lines

Figure 1:

The formation stages

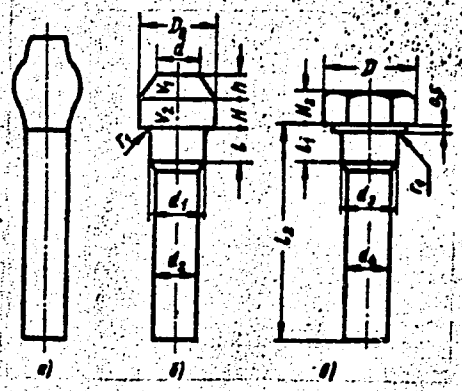

Figure 2:

The automatic machine line

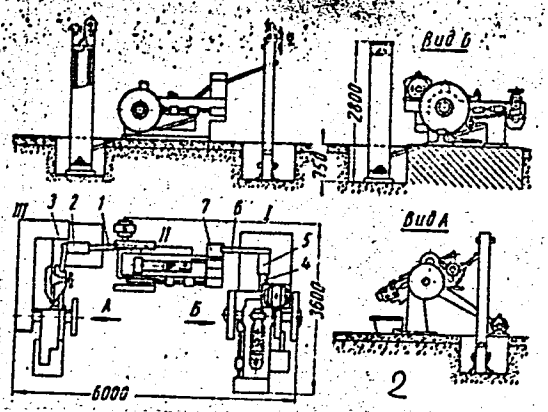

Card 3/6

APPROVED FOR RELEASE: 07/12/2001 CIA-RDP86-00513R001032730002-3"

"APPROVED FOR RELEASE: 07/12/2001 CIA-RDP86-00513R001032730002-3

S/182/60/000/010/011/015/XX
A161/A030

Calculation of Passes and Tools for Production of Bolts in Automatic Machine Lines

Figure 3:

The first stroke punch

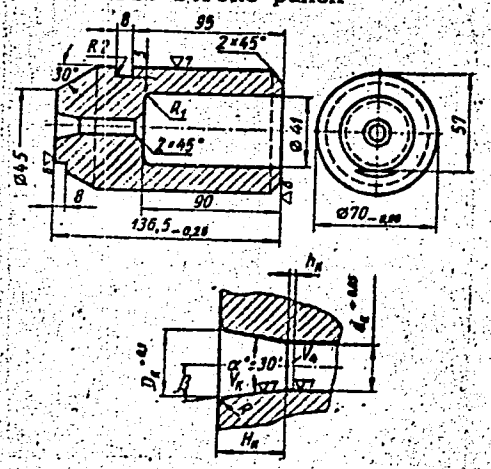

Figure 4:

The bed die for the first stage (dimensions $d_{подл}$ and d are after chrome plating)

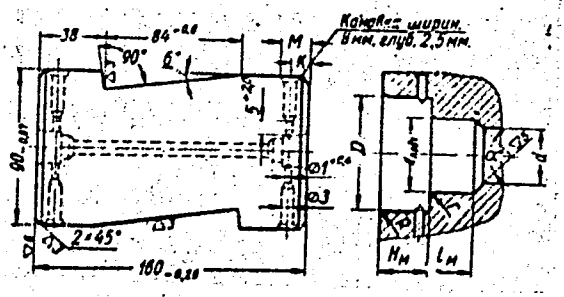

Card 4/6

APPROVED FOR RELEASE: 07/12/2001 CIA-RDP86-00513R001032730002-3"

"APPROVED FOR RELEASE: 07/12/2001 CIA-RDP86-00513R001032730002-3

S/182/60/000/010/011/015/XX
A161/A030

Calculation of Passes and Tools for Production of Bolts in Automatic Machine Lines

Figure 5:

Figure 6:

The punch and die of the second stage (dimensions d and d_1 after chrome plating)

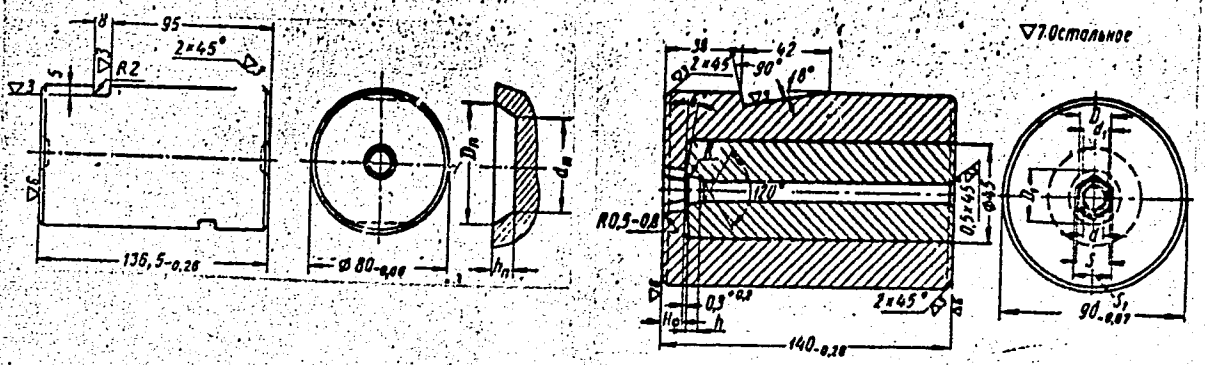

Card 5/6

APPROVED FOR RELEASE: 07/12/2001 CIA-RDP86-00513R001032730002-3"

"APPROVED FOR RELEASE: 07/12/2001 CIA-RDP86-00513R001032730002-3

S/182/60/000/010/011/015/XX
A161/A030

Calculation of Passes and Tools for Production of Bolts in Automatic Machine Lines

Figure 7:

The last stage punch

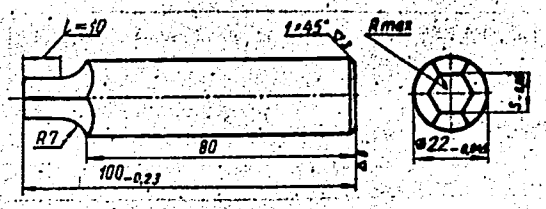

Card 6/6

APPROVED FOR RELEASE: 07/12/2001 CIA-RDP86-00513R001032730002-3"

"APPROVED FOR RELEASE: 07/12/2001 CIA-RDP86-00513R001032730002-3

GLADKIKH, A.N.; MASLENNIKOV, N.I.

Automatic line for manufacturing bolts without waste. Mashinostroitel' no.11:2-5 N '60. (MIRA 13:10)

(Machinery, Automatic)

APPROVED FOR RELEASE: 07/12/2001 CIA-RDP86-00513R001032730002-3"

"APPROVED FOR RELEASE: 07/12/2001 CIA-RDP86-00513R001032730002-3

GLADKIKH, Aleksandr Nikitovich; kand. tekhn. nauk; MASLENNIKOV, Nikolay Ivanovich, inzh.; CHERNYAKOVA, I.Z., red.; SHILLING, V.A., red. izd-va; BELOGUROVA, I.A., tekhn. red.

[Automatic lines for cold upsetting] Avtomaticheskie linii kholodnovysadochnogo proizvodstva; opyt gor'kovskogo zavoda "Krasnaia Etna." Leningrad, 1961. 16 p. (Leningradskii Dom nauchno-tekhnicheskoi propagandy. Obmen peredovym opytom. Seriia: Goriachaia i kholodnaia obrabotka metallov davleniem, no.4) (MIRA 14:10)
(Gorkiy—Screws) (Gorkiy—Bolts and nuts) (Automation)

APPROVED FOR RELEASE: 07/12/2001 CIA-RDP86-00513R001032730002-3"

"APPROVED FOR RELEASE: 07/12/2001 CIA-RDP86-00513R001032730002-3

GLADKIKH, A.N.; MASLENNIKOV, N.I.; FARAFONOV, P.P.

Automatic production lines for bolts and screws. Kuz.-shtam. proizv. 3 no.1:9-11 Ja '61. (MIRA 14:1)
(Forging) (Assembly line methods)

APPROVED FOR RELEASE: 07/12/2001 CIA-RDP86-00513R001032730002-3"

"APPROVED FOR RELEASE: 07/12/2001 CIA-RDP86-00513R001032730002-3

GLADKIKH, A.N.; MASLENNIKOV, N.I.

Double action upsetters in the new automatic line. Kuz.shtam. proizv. no.4:32-35 Ap '61. (MIRA 14:3)
(Forging machinery)

APPROVED FOR RELEASE: 07/12/2001 CIA-RDP86-00513R001032730002-3"

"APPROVED FOR RELEASE: 07/12/2001 CIA-RDP86-00513R001032730002-3

ACCESSION NR: AR3000145 S/0272/63/000/005/0151/0151

SOURCE: RZh. Metrologiya i izmeritel'naya tekhnika, Abs. 5.32.1022

AUTHOR: Gul'nitskiy, L. V.; Maslennikov, N. I.

TITLE: Particularization of the methods of measurement of scattered radiation

CITED SOURCE: Tr. Kazakhsk. s.-kh. in-ta. v. 9, 1961, 87-90

TOPIC TAGS: model compensation pyranometer; scattered radiation

TRANSLATION: Description of a model of a compensation pyranometer for measuring scattered radiation. The receiver plates are 2 disks, 50 mm in diameter and 0.1 mm thick, made of manganin wire. The external surfaces of the disks are coated with magnesium oxide; on one of the disks a layer of carbon black is superimposed on the magnesium oxide layer. Both surfaces are positioned in exactly the same manner within two re-

Card 1/2

APPROVED FOR RELEASE: 07/12/2001 CIA-RDP86-00513R001032730002-3"

"APPROVED FOR RELEASE: 07/12/2001 CIA-RDP86-00513R001032730002-3

ACCESSION NR: AR3000145

cesses of a metal disk covered with a spherical glass shield. The error of determination of intensity of scattered radiation does not exceed + or - 0.002 calorie cm sup -2 minute sup -1. Orig. art. has: 1 illustration. V. Merkulov

DATE ACQ: 21May63 ENCL: 00 SUB CODE: 00

Card 2/2

APPROVED FOR RELEASE: 07/12/2001 CIA-RDP86-00513R001032730002-3"

"APPROVED FOR RELEASE: 07/12/2001 CIA-RDP86-00513R001032730002-3

GLADKIKH, A.N., kand.tekhn.nauk; MASLENNIKOV, N.I.; FARAFONOV, P.P.

Automatic and continuous lines for the hardware manufacture.
Mashinostroitel' no.12:8-9 D '61. (MIRA 14:12)
(Machine tools--Technological innovations)
(Automation)

APPROVED FOR RELEASE: 07/12/2001 CIA-RDP86-00513R001032730002-3"

"APPROVED FOR RELEASE: 07/12/2001 CIA-RDP86-00513R001032730002-3

MASLENNIKOV, N. M.

"Current Distribution Between Parallel-Connected Anodes and Valves." Cand Tech Sci, All-Union Order of Lenin Electrical Engineering Inst imeni V. I. Lenin, 28 Dec 54. (VM, 17 Dec 54)

Survey of Scientific and Technical Dissertations Defended at USSR Higher Educational Institutions (12)
SO: Sum. No. 556, 24 Jun 55

APPROVED FOR RELEASE: 07/12/2001 CIA-RDP86-00513R001032730002-3"

"APPROVED FOR RELEASE: 07/12/2001 CIA-RDP86-00513R001032730002-3

p5

APPROVED FOR RELEASE: 07/12/2001 CIA-RDP86-00513R001032730002-3"

"APPROVED FOR RELEASE: 07/12/2001 CIA-RDP86-00513R001032730002-3

A-4 Electrotech Inst im Lenin

APPROVED FOR RELEASE: 07/12/2001 CIA-RDP86-00513R001032730002-3"

"APPROVED FOR RELEASE: 07/12/2001 CIA-RDP86-00513R001032730002-3

8(3)

AUTHOR: ~~Maslennikov, N. M.~~, Candidate of Technical Sciences SOV/105-58-12-2/28

TITLE: Determination of the Recovery Voltage Form in Rotary Converters (Opredeleniye formy vosstanavlivayushchegosya napryazheniya v preobrazovatel'nykh ustanovkakh)

PERIODICAL: Elektrichestvo, 1958, Nr 12, pp 9 - 13 (USSR)

ABSTRACT: Herewith is brought a method of calculation simple circuits of rotary converters. This method allows in a simple and quick way the determination of the frequency and the damping of the recovery voltage. For more complicated circuits it is useful to determine the form of a curve of the recovery voltage with the help of an oscillograph and of the diagram of an equivalent circuit of low power, in which the oscillations are excited. The method here recommended corresponded well with the test data of a few operating installations. It was determined that in superpower-stations the damping of the oscillations takes place at the expenses of losses which are generally not taken into consideration. Finally five examples

Card 1/2

APPROVED FOR RELEASE: 07/12/2001 CIA-RDP86-00513R001032730002-3"

"APPROVED FOR RELEASE: 07/12/2001 CIA-RDP86-00513R001032730002-3

Determination of the Recovery Voltage Form in Rotary Converters SOV/105-58-12-2/28

for illustration are given. There are 11 figures, 2 tables and 4 Soviet references.

SUBMITTED: April 26, 1958

Card 2/2

APPROVED FOR RELEASE: 07/12/2001 CIA-RDP86-00513R001032730002-3"

"APPROVED FOR RELEASE: 07/12/2001 CIA-RDP86-00513R001032730002-3

SOV/110-59-2-8/21

AUTHOR: Maslennikov, N.M., Candidate of Technical Sciences

TITLE: The Distribution of Voltage Between the Intermediate Electrodes of the Valves of the All-Union Electro-Technical Institute (Raspredeleniye napryazheniya po promezhutochnym elektrodam ventiley VEI)

PERIODICAL: Vestnik Elektropromyshlennosti, 1959, Nr 2, pp 27-31 (USSR)

ABSTRACT: Work has already been published about the voltage distribution between the intermediate electrodes of ionic rectifiers. This article considers the question in a practical manner in relation to the high voltage valves of the VEI (All-Union Electro-Technical Institute) which were described in Vestnik Elektropromyshlennosti Nr 9, 1957, Elektrichestvo Nr 5, 1958, and one of which is illustrated in Fig 1 and briefly described here. In the tests described the valve was supplied by transformers of 20, 37.5 or 120 MVA. The valves were connected in a three-phase circuit with zero point (Fig 2) with control angle of 80 - 90 degrees electrical and with an inductive load. A typical oscillogram of the voltage on the valve is given in Fig 3. The electrode potentials were measured by means of a capacitance voltage divider.

Card 1/4

APPROVED FOR RELEASE: 07/12/2001 CIA-RDP86-00513R001032730002-3"

"APPROVED FOR RELEASE: 07/12/2001 CIA-RDP86-00513R001032730002-3

SOV/110-59-2-8/21

The Distribution of Voltage Between the Intermediate Electrodes of the Valves of the All-Union Electro-Technical Institute

Measurements were made simultaneously of the voltage on the anode and on some intermediate electrode, using a three beam high-voltage oscillograph with delayed sweep. The question of voltage distribution between the intermediate electrodes is briefly discussed. Curves of the voltage distribution between the electrodes of valve type VR-4-1 under different conditions are given in Fig 4. Valve type VR-3, which is intended for a smaller current, usually has four intermediate electrodes. The distribution of voltage between the electrodes of this valve coincides with the curves 3 and 6 of Fig 4. The influence of the resistance voltage divider, connected as shown in Fig 5, on the voltage distribution between the intermediate electrode, is then discussed. Data about the distribution of voltage between the electrodes of valve type VR-4/2 are given in Table 1 for various forward and back voltages and different voltage dividers. Oscillograms of the voltages of the anode and the intermediate electrodes of valve VR-4/2 are given in Fig 6. In order to determine the influence of

Card 2/4

APPROVED FOR RELEASE: 07/12/2001 CIA-RDP86-00513R001032730002-3"

"APPROVED FOR RELEASE: 07/12/2001 CIA-RDP86-00513R001032730002-3

SOV/110-59-2-8/21

The Distribution of Voltage Between the Intermediate Electrodes of the Valves of the All-Union Electro-Technical Institute

individual electrodes on the voltage distribution in the valve type VR-9/3, the first and fourth electrode connecting circuits were removed leaving only the cylindrical screens. This had little effect on the electrode potentials or on the frequency of back-fires. Electrode potentials for the modified and a normal valve are given in Table 2. It will be seen from Tables 1 and 2 that the voltage distributions at the instant of maximum restoring voltage in valves VR-4/2 and VR-9/3 are practically identical. The test circuit used was not very satisfactory for determining whether the voltage dividers incorporated in the valves were effective in preventing backfires. However, other tests that are briefly described, clearly demonstrate the advantages of voltage dividers in preventing backfires. It is concluded that in designing high voltage valves, selection of the values of the intermediate capacitances of the anode circuit of the valve and of the resistance of the sections of the external resistance-voltage-divider that shunt these capacitances should depend on

Card 3/4

APPROVED FOR RELEASE: 07/12/2001 CIA-RDP86-00513R001032730002-3"

"APPROVED FOR RELEASE: 07/12/2001 CIA-RDP86-00513R001032730002-3

SOV/110-59-2-8/21

The Distribution of Voltage Between the Intermediate Electrodes of the Valves of the All-Union Electro-Technical Institute

the rate of rise of recovery voltage so that no excessive voltages appear on any gap during the recovery process. The inter-electrode capacitance should be as low as possible in order to reduce the power of the external resistive voltage divider. The anode voltage on the valve may be increased by increasing the number of intermediate electrodes.

Card 4/4

There are 6 figures, 2 tables and 4 Soviet references.

SUBMITTED: July 25, 1958

APPROVED FOR RELEASE: 07/12/2001 CIA-RDP86-00513R001032730002-3"

"APPROVED FOR RELEASE: 07/12/2001 CIA-RDP86-00513R001032730002-3

MASLENNIKOV, N.M.; SAKOVICH, A.A.; ANDREYEV, V.D.

Firing of a sectionalized high-voltage rectifier.
Elektrichestvo no.6:25-29 Je '60. (MIRA 13:7)

1. Vsesoyuznyy elektrotekhnicheskiy institut im. Lenina.
(Electric current rectifiers)

APPROVED FOR RELEASE: 07/12/2001 CIA-RDP86-00513R001032730002-3"

"APPROVED FOR RELEASE: 07/12/2001 CIA-RDP86-00513R001032730002-3

MASLENNIKOV, N.M., kand.tekhn.nauk; NADAL'YAK, N.Yu., inzh.; KOLESNIKOV, V.D., inzh.

A comparison of methods for measuring the voltage drop in the arc of mercury rectifiers. Vest. elektroprom. 33 no.11: 55-58 N '62. (MIRA 15:11)

(Mercury-arc rectifiers)

APPROVED FOR RELEASE: 07/12/2001 CIA-RDP86-00513R001032730002-3"

"APPROVED FOR RELEASE: 07/12/2001 CIA-RDP86-00513R001032730002-3

L 00484-66 EPF(c)/EPF(n)-2/EPA(w)-2/EWP(t) EWT(1)/EWT(m)/EWG(m)/EWP(b)
IJP(c) AT/JD/JG

ACCESSION NR: AP5020553 UR/0294/65/003/004/0524/0529
533.932.15:546.293+546.32

60
54
B

AUTHOR: Maslennikov, N. M.; Germanyuk, V. N.
44,55 44,55

TITLE: Experimental investigation of electric conductivity in a stream of argon containing potassium oxide
27

SOURCE: Teplofizika vysokikh temperatur, v. 3, no. 4, 1965, 524-529

TOPIC TAGS: electric conductivity, plasma conductivity, argon, potassium compound, molybdenum, tantalum, tungsten, electric discharge

ABSTRACT: The object of the article is to clarify the effect of discharge conditions, temperature, cathode, material, and parameters of gas flow on the electric conductivity of the plasma space as a whole. Argon was heated to the required temperature in an electric arc heater and fed into the mixing chamber, and a mixture of argon and potassium oxide was fed into the same chamber. The walls of the mixing chamber were cooled with water and a metallic screen prevented condensation of the potassium oxide. The gas then entered the measuring section through rectangular openings 18x20 mm. The material of the heated electrodes

Card 1/2

APPROVED FOR RELEASE: 07/12/2001 CIA-RDP86-00513R001032730002-3"

"APPROVED FOR RELEASE: 07/12/2001 CIA-RDP86-00513R001032730002-3

L 00484-66

ACCESSION NR: AP5020553

6

was molybdenum, tantalum, and tungsten, with a thickness of 0.1-0.2 mm. Gas feed was 2 grams/sec, and the flow rate between electrodes varied from 20 to 40 m/sec, depending on gas temperature. Experimental results showed that, with a non self-sustaining discharge at a gas temperature of 2500-3000K, the measured electric conductivity of the space was less than the electric conductivity of the space calculated with respect to the equilibrium conductivity of the plasma, and was limited by emissions from the cathode. Under conditions of a non self-sustaining discharge, at a gas temperature of 1800 K and a potassium oxide temperature greater than 2570 K, measurements of electric conductivity were hundreds of times greater than the electric conductivity of the space calculated with respect to the equilibrium electric conductivity of the plasma. Orig. art. has: 1 formula, 6 figures and 1 table

ASSOCIATION: Vsesoyuznyy elektrotekhnicheskiy institut im. V. I. Lenina (All-Union Electrotechnical Institute) 44,55

SUBMITTED: 01Aug64 ENCL: 00 SUB CODE: ME, EM

NR REF SOV: 004 OTHER: 005

Card 2/2 KC

APPROVED FOR RELEASE: 07/12/2001 CIA-RDP86-00513R001032730002-3"

"APPROVED FOR RELEASE: 07/12/2001 CIA-RDP86-00513R001032730002-3

PHASE I BOOK EXPLOITATION SOV/3727

Rasshireniye vozmozhnostey primeneniya plastmass v konstruktsiyakh mashin (Widening the Possibilities for Using Plastics in Machinery Components) Moscow, Mashgiz, 1959. 183 p. 8,000 copies printed.

Reviewers: N.V. Popov, Engineer, and P.Z. Petukhov, Doctor of Technical Sciences; Ed.: N.I. Suslov, Engineer; Tech. Eds.: N.A. Dugina and A.P. Uvarova; Exec. Ed. (Ural-Siberian Division, Mashgiz): T.N. Somova, Engineer.

PURPOSE: The book is intended for engineers and scientists engaged in the study and manufacture of plastics and plastic machine parts.

COVERAGE: The chapters of this book were written by different authors indicated in parentheses after each chapter in the table of contents. The chapter on the use of plastics in non-Soviet countries includes data on the Skoda Works in Czechoslovakia. A number of Soviet manufacturing establishments are mentioned. Equipment using plastic parts is described and evaluated. Considerable attention is paid to nonferrous and chemical enterprises, as well as to the problem of substituting plastics for critical materials in types of equipment subjected to wear or to corrosive, abrasive and chemical influences. Brand designations, properties and uses of a number of Soviet-made plastic materials are given. It is thus a survey of modern Soviet plastic materials grouped according to their specific application in industry. The authors rely heavily upon the experience of Ural plants, especially those specializing in electrical apparatus, automotive equipment, and measuring instruments. No personalities are mentioned. There are 37 references: 31 Soviet, and 5 German.

TABLE OF CONTENTS:

Ch. II. Parts Made of Plastics (A.Ya. Bayer, V.K. Solov'yeva, V.N. Zhuravlev, V.S. Bankovskaya, and N.F. Maslennikov) 17

1. Textolite-surfaced guides for heavy machines 17
2. Properties and application of laminated wood-base plastics [DSP] 21
   Laminated wood-base plastics DSP 21
   Wood flour 27
3. Parts made of asbestos-base plastics 28
4. Use of acrylics at the Chelyabinskiy zavod izmeritel'nykh instrumentov (Chelyabinsk Measuring Instrument Plant [ChIZ]) 33
5. Use of plastics at some industrial enterprises in the Kuznetsk Basin 38
   Bearings made of plastics 38
   Electric drives for belt conveyors with plastic parts (description of an experimental model) 39
   Plastic bearings for machines used in mineral-wool manufacture 41

Ch. III. Plastics in Electrical Machinery and Instruments (G.V. Puylo, L.T. Ponomarev, and V.N. Samaryanov) 44

1. Plastic parts in electrical machinery 44
2. Escapone [copolymers of a Soviet type of synthetic rubber] and escapone insulation 47
   Escapone polymers 49
   Escapone compound 52
   Escapone lacquers 52
   Escapone finishing of cloth made of paper or textile fibres 53
   Technology of manufacturing escapone-impregnated glass fabric, lacquer-coated escapone-impregnated glass fabric, and glass-escapone adhesive tape 54
   Properties of electrical insulating materials made of escapone plastics 57
   Economic efficiency of electrical insulation made of escapone plastics 62
3. Use of plastics for instrument components at the Chelyabinsk "Teplopribor" Plant 63

APPROVED FOR RELEASE: 07/12/2001 CIA-RDP86-00513R001032730002-3"

"APPROVED FOR RELEASE: 07/12/2001 CIA-RDP86-00513R001032730002-3

MASLENNIKOV, Nikolay Pavlovich; BALIBALOV, I., red.; RUDINA, G., tekhn.red.

[Use of plastics in the machinery industry of the Kuznetsk Basin] Plastmassy Kuzbassa v mashinostroenii. Kemerovo, Kemerovskoe knizhnoe izd-vo, 1960. 32 p. (MIRA 14:2)
(Kuznetsk Basin--Plastics)

APPROVED FOR RELEASE: 07/12/2001 CIA-RDP86-00513R001032730002-3"

"APPROVED FOR RELEASE: 07/12/2001 CIA-RDP86-00513R001032730002-3

S/184/60/000/005/007/021
A104/A026

AUTHOR: Maslennikov, N.P., Engineer

TITLE: Practical Use of Plastics

PERIODICAL: Khimicheskoye mashinostroyeniye, 1960, No. 5, pp. 44 - 45

TEXT: The article deals with the use of plastics in machine engineering and describes such machines installed in various non-specified plants of the Kuzbass (Kuznetskiy Pasin). Figure 1 shows textolite (T) and caprone (K) parts of a centrifuge for production of slag-cotton. By using textolite the belt drive could be replaced by friction gearing, which increased the capacity and reduced the size of the centrifuge. Friction parts are cooled by water which is also acting as lubricant of the textolite bearings. A centrifugal pump with plastic bearings operating on the main and sectional spillways is shown in Figure 2. Bearing bushings (1) and discharge rings (2) are made of rubber-graphite plastics. The bearings are cooled and lubricated by water. Blastic bushings simplified the design, reduced size and weight of the pump, saving cast iron and hot-rolled metal. Further components of materials used for shims are sulfur (vulcanizer), soot and zinc oxide (active fillers), ensuring high mechanical properties of plastics after vulcanization. Lubricating oil, paraffin, aldol

Card 1/4

APPROVED FOR RELEASE: 07/12/2001 CIA-RDP86-00513R001032730002-3"

"APPROVED FOR RELEASE: 07/12/2001 CIA-RDP86-00513R001032730002-3

stabilizer and diphenyl-guanidine facilitate even distribution of these components. The rubber-graphite mix has satisfactory self-lubricating properties. Tests showed that the bearing performance improves at increased circumferential speed of 30 m/sec, the friction coefficient reaches 0.001 at water lubrication at a permissible specific pressure of 45 kg/cm^2. Temperatures of 150 - 175°C are permitted during short-time operations, provided that bearings are properly lubricated to prevent carbonization of the surface and ensure proper performance. Textolite is used as material for bearing bushes of rolling-mills in the Kuznetskiy metallurgicheskiy kombinat (Kuznetsk Metallurgical Combine), operating at pressures of 230 - 250 kg/cm^2 and a circumferential speed of 2.5 m/sec. In blooming mills the bushing load reaches 1,000 tons at 3 m/sec. Low heat conductivity of textolite is compensated by water cooling and lubrication. The use of textolite reduced friction losses by 25% and prolonged the service life of bearings. Plastics (glass, fibers, textolite, caprone and nylon) are also used in mining and for chemical equipment. There are 3 figures.

APPROVED FOR RELEASE: 07/12/2001 CIA-RDP86-00513R001032730002-3"

"APPROVED FOR RELEASE: 07/12/2001 CIA-RDP86-00513R001032730002-3

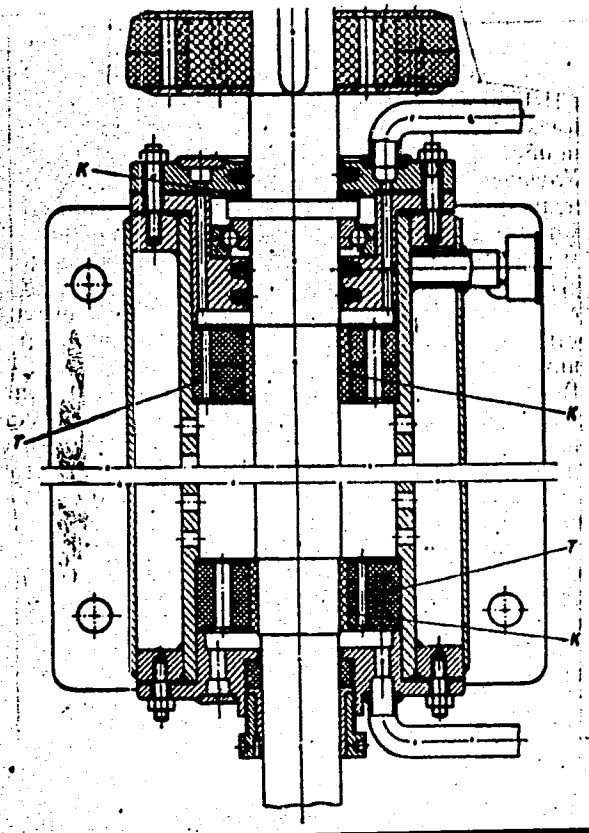

S/184/60/000/005/007/021
A104/A026

Practical Use of Plastics

Figure 1: Textolite (T) and Caprone (K) parts in a centrifuge for slag-cotton production.

Card 3/4

APPROVED FOR RELEASE: 07/12/2001 CIA-RDP86-00513R001032730002-3"

"APPROVED FOR RELEASE: 07/12/2001 CIA-RDP86-00513R001032730002-3

Practical Use of Plastics

S/184/60/000/005/007/021
A104/A026

Figure 2: Plastic bearings in centrifugal pump.

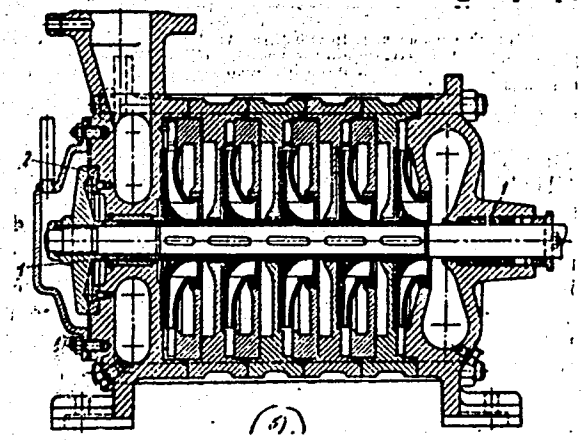

(5)

Card 4/4

APPROVED FOR RELEASE: 07/12/2001 CIA-RDP86-00513R001032730002-3"

"APPROVED FOR RELEASE: 07/12/2001 CIA-RDP86-00513R001032730002-3

MASLENNIKOV, Nikolay Pavlovich; BALIBALOV, I., red.; GERASEVICH, Z., tekhn. red.

[Concise handbook for hydraulic engineers] Kratkii spravochnik gidromekhanizatora. Kemerovo, Kemerovskoe knizhnoe izd-vo, 1963. 179 p. (MIRA 16:10)

(Hydraulic mining)

APPROVED FOR RELEASE: 07/12/2001 CIA-RDP86-00513R001032730002-3"

"APPROVED FOR RELEASE: 07/12/2001 CIA-RDP86-00513R001032730002-3

YENIKEYEV, S.G.; SHOYKHET, L.Ye.; MASLENNIKOV, P.A.

Certain problems involved in the storage of sugar beets in Kirghizistan. Sakh.prom. no.4:13-14 Ap '60. (MIRA 13:8)

1. Karabaltinskiy sakharnyy zavod.
(Kirghizistan--Sugar beets--Storage)

APPROVED FOR RELEASE: 07/12/2001 CIA-RDP86-00513R001032730002-3"

"APPROVED FOR RELEASE: 07/12/2001 CIA-RDP86-00513R001032730002-3

MASLENNIKOV, P.D., khimik

Making good use of dyestuffs. Tekst.prom.15 no.10:54-55 O'55. (MIRA 8:12)

1. Sosnevskaya otdelochnaya fabrika
(Dyes and dyeing)

APPROVED FOR RELEASE: 07/12/2001 CIA-RDP86-00513R001032730002-3"

"APPROVED FOR RELEASE: 07/12/2001 CIA-RDP86-00513R001032730002-3

MASLENNIKOV, F.D.

Dyeing staple fabrics by the two-bath method. Tekst.prom.16 no.9:54-55 S '56. (MLRA 9:12)

1. Khimik Sosnevskoy fabriki imeni Samoylova.
(Dyes and dyeing--Rayon)

APPROVED FOR RELEASE: 07/12/2001 CIA-RDP86-00513R001032730002-3"

"APPROVED FOR RELEASE: 07/12/2001 CIA-RDP86-00513R001032730002-3

MASLENNIKOV, P. I.

Maslennikov, P. I. "The four-milling industry of Saratov Oblast", Uchen. zapiski (Sarat. gos. in-t im. Chernyshevskogo), Vol.XXII, Geographic issue, 1949, p. 19-41, - Bibliog: 6 items.

SO: U-4392, 19 August 53, (Letopis 'Zhurnal 'nykh Statey, No 21, 1949).

APPROVED FOR RELEASE: 07/12/2001 CIA-RDP86-00513R001032730002-3"

"APPROVED FOR RELEASE: 07/12/2001 CIA-RDP86-00513R001032730002-3

1. MASLENNIKOV, P. S.

2. USSR (600)

4. Vegetable Gardening

7. Work practice of the machine-tractor station in mechanizing vegetable gardening, Sad i ogr., No. 3, 1953.

9. Monthly List of Russian Accessions, Library of Congress, April, 1953, Uncl.

APPROVED FOR RELEASE: 07/12/2001 CIA-RDP86-00513R001032730002-3"

"APPROVED FOR RELEASE: 07/12/2001 CIA-RDP86-00513R001032730002-3

MASLENNIKOV, S. (Kursk)

It happened in Nagol'noe. Kryl.rod. 13 no.12:4-5 D '62.
(MIRA 16:2)

(Air pilots)

APPROVED FOR RELEASE: 07/12/2001 CIA-RDP86-00513R001032730002-3"

"APPROVED FOR RELEASE: 07/12/2001 CIA-RDP86-00513R001032730002-3

1. MASLENNIKOV, S. A.

2. USSR (600)

4. Windbreaks, Shelterbelts, etc.

7. Creating the Voronezh-Rostov-on-Don government shelterbelt, Les. khoz., 5, No. 12, 1952.

9. Monthly List of Russian Accessions, Library of Congress, April, 1953, Uncl.

APPROVED FOR RELEASE: 07/12/2001 CIA-RDP86-00513R001032730002-3"

"APPROVED FOR RELEASE: 07/12/2001 CIA-RDP86-00513R001032730002-3

MASLENNIKOV, S.A., inzh.; KRASNOBAYEV, A.S., inzh.

Retention terraces in erosion control. Zemledelie 7 no.9:78-80 S '59. (MIRA 12:11)

1. Nachal'nik upravleniya lesnogo khozyaystva Voroneshskogo oblastnogo upravleniya sel'skogo khozyaystva (for Maslennikov). 2. Nachal'nik Voronezhskoy ekspeditsii "Agrolesoproyekt" (for Krasnobayev).
(Soil conservation) (Terracing)

APPROVED FOR RELEASE: 07/12/2001 CIA-RDP86-00513R001032730002-3"

"APPROVED FOR RELEASE: 07/12/2001 CIA-RDP86-00513R001032730002-3

8(6) SOV/98-59-7-10/22

AUTHOR: Maslennikov, S. K., Engineer

TITLE: The Use of Horizontal Variable-Pitch-Type Hydro-Electric Turbines

PERIODICAL: Gidrotekhnicheskoye stroitel'stvo, 1959, Nr 7, pp 44 - 49 (USSR)

ABSTRACT: The article is a discussion of the advantages of horizontal direct and semi-direct flow turbines, equipped with variable pitch blades, over the more spiral casing type. In such turbines the generator is combined with the runner in one piece or is installed on the turbine axis at either the inflow or discharge end of the GES. The author names the authorities which first researched the possibility of developing this type of turbine - Prof. B.K. Aleksandrov of the Gidroenergoproyekt and Prof. V. S. Kvyatkovskiy of the VIGM, while work on the direct-flow type was done in the Tbilisi department of the Gidroenergoproyekt; the horizontal type of turbine was developed in the Moscow VIGM and the Leningrad LMZ. Some other tests were carried out by the MEI and MISI (Moscow) and

Card 1/4

APPROVED FOR RELEASE: 07/12/2001 CIA-RDP86-00513R001032730002-3"

"APPROVED FOR RELEASE: 07/12/2001 CIA-RDP86-00513R001032730002-3

the LPI (Leningrad). The only two horizontal variable-pitch units in the USSR, the Ortachal'skaya (direct-flow) and the Kamskaya GES (semi-direct) are briefly described, and a short survey is made of foreign experience in this field: projects by the Swiss firm Escher-Wyss and the French GES Castets (Fig 1) and Argentat (Fig 2). The positive features of the semi-direct flow type, as opposed to direct flow, are then enumerated: 1) greater efficiency, proved by tests using the same PL-548 runner in a direct flow unit with axial distributor (Fig 3) and in a vertical spiral casing with radial distributor (Fig 4). From these graphs the following conclusions could be drawn: a) the use of a straight-axled discharge pipe increases maximum efficiency; b) the rate of discharge is increased; c) the efficiency isolines are increased; and d) the efficiency isolines on the Q_1 axle are increased by about 300%. The data taken from the graphs shows that in semi-direct flow turbines the efficiency remains more constant at times

APPROVED FOR RELEASE: 07/12/2001 CIA-RDP86-00513R001032730002-3"

"APPROVED FOR RELEASE: 07/12/2001 CIA-RDP86-00513R001032730002-3

SOV/98-59-7-10/22

The Use of Horizontal Variable-Pitch-Type Hydro-Electric Turbines

of change in the rate of water flow and in pressure. On the basis of this experiment the Kama GES was equipped with a semi-direct flow turbine, with a resultant decrease in the total weight of about 100t; 2) simplicity of design, the turbine no longer requiring the complicated spiral casing; the axial distributor is more efficient, but at the same time of more complex design, while the direct-axial discharge pipe is simpler than the curved one which it replaces. The semi-direct axial unit has 3 foundation pillars, as opposed to 1 in the case of the vertical turbine, and certain problems connected with the installation of the turbine in this respect have not yet been overcome; 3) factors in construction indicating the superiority of horizontal type turbines are the smaller space required to accommodate the same power (data for which is provided), simplicity of construction (there being less component parts), but the cavitation coefficient is slightly increased due to the instability of the rectilinear

Card 3/4

APPROVED FOR RELEASE: 07/12/2001 CIA-RDP86-00513R001032730002-3"

"APPROVED FOR RELEASE: 07/12/2001 CIA-RDP86-00513R001032730002-3

SOV/98-59-7-10/22

The Use of Horizontal Variable-Pitch-Type Hydro-Electric Turbines

vortex formed inside the conical discharge pipe. The article concludes with a brief summing-up of the conclusions drawn from the experiment and suggests further intensified research should be carried out on all aspects of this type of turbine, as proposed by Prof. B.K. Aleksandrov. There are 2 diagrams, 2 graphs, and 4 references, 2 of which are Soviet, 1 German and 1 French.

Card 4/4

APPROVED FOR RELEASE: 07/12/2001 CIA-RDP86-00513R001032730002-3"

"APPROVED FOR RELEASE: 07/12/2001 CIA-RDP86-00513R001032730002-3

MASLENNIKOV, S.M.,

KUZ'MICHEV, F.I.; LEVIN, M.I.; MASLENNIKOV, S.M., retsenzent; PLEMYANNIKOV, M.N., redaktor; KL'YEVA, T.M., tekhnicheskiy redaktor.

[Technology of felt manufacture] Tekhnologiia valial'no-voilochnogo proizvodstva. Moskva, Gos. nauchno-tekhn. izd-vo Ministerstva promyshlennykh tovarov shirokogo potrebleniia SSSR, 1954. 270 p.
(Felt) (Shoe industry). (MLRA 7:12)

APPROVED FOR RELEASE: 07/12/2001 CIA-RDP86-00513R001032730002-3"

"APPROVED FOR RELEASE: 07/12/2001 CIA-RDP86-00513R001032730002-3

MASLENNIKOV, S.N., vrach

Remedy alleviating the condition of cancer victims. Izobr.i rats. no.7:37 Jl '58. (MIRA 11:9)
(CANCER) (FUNGI)

APPROVED FOR RELEASE: 07/12/2001 CIA-RDP86-00513R001032730002-3"

"APPROVED FOR RELEASE: 07/12/2001 CIA-RDP86-00513R001032730002-3

MASLENNIKOV, V.A.

Conditions determining the diapause in the parasitic hymenopterans Apanteles glomeratus L. (Hymenoptera, Braconidae) and Pteromalus puparum L. (Hymenoptera, Chalcididae) [with summary in English]. Ent. obozr. 37 no. 3:538-545 '58. (MIRA 11:10)
(Parasitica)
(Insects--Development)

APPROVED FOR RELEASE: 07/12/2001 CIA-RDP86-00513R001032730002-3"

"APPROVED FOR RELEASE: 07/12/2001 CIA-RDP86-00513R001032730002-3

MASLENIKOV, V.

"Computation of the Thermal Process of a Water Conduit by the Hydraulic Analogy Method." Cand Tech Sci, Acad Communal Economy imeni K. D. Pamfilov, Moscow, 1955. (KL No 17, Apr 55)

SO: Sum. No. 704, 2 Nov 55 - Survey of Scientific and Technical Dissertations Defended at USSR Higher Educational Institutions (16).

APPROVED FOR RELEASE: 07/12/2001 CIA-RDP86-00513R001032730002-3"

"APPROVED FOR RELEASE: 07/12/2001 CIA-RDP86-00513R001032730002-3

MASLENNIKOV, V.A., inzh.

Increasing the output of PN-32 electric shaft furnaces. Metalloved. i term. obr. met. no.4:13-15 Ap '61. (MIRA 14:3)
(Electric furnaces) (Furnaces, Heat-treating)

APPROVED FOR RELEASE: 07/12/2001 CIA-RDP86-00513R001032730002-3"

"APPROVED FOR RELEASE: 07/12/2001 CIA-RDP86-00513R001032730002-3

MASLENNIKOV, V. A.

SUBJECT USSR/MATHEMATICS/Differential equations CARD 1/1 PG - 152

AUTHOR MASLENNIKOV V.A.

TITLE Qualitative control of a neutral object by an astatic regulator.

PERIODICAL Avtomat. Telemech. 17, 107-116 (1956)
reviewed 7/1956

The author investigates a regulating process which is described by the equations $q = a\xi$ (regulating line) and $\dot{\xi} = kq\varphi(q)$ (regulator). The author shows that for

$$(q) = \begin{cases} -1 & \text{for } |q| \leq \frac{1}{\sqrt{2}} |q_M|, \text{ sign } q\dot{q} = -1 \\ +1 & \text{otherwise} \end{cases}$$

every disturbance during the first oscillation is effaced. Here q_M is the extremal initial disturbance. The definition equation for φ contains misprints.

APPROVED FOR RELEASE: 07/12/2001 CIA-RDP86-00513R001032730002-3"

"APPROVED FOR RELEASE: 07/12/2001 CIA-RDP86-00513R001032730002-3

MASLENNIKOV, V.A.

USSR/Miscellaneous - Politics

Card 1/1 : Pub. 124 - 5/24

Authors : Maslennikov, V. A., Dr. of Econ. Sc.

Title : Historical conquests of the Chinese people

Periodical : Vest. AN SSSR 11, 35-46, November 1954

Abstract : A historical review of the political accomplishments of the Chinese people from 1905 to 1949, when the Chinese Peoples Republic under Mao Tse Tung was established, is presented. The economical structure of the present Chinese Peoples Republic is discussed. Remarks on the provocative attacks by the USA and Chiang Kai Shek upon the Chinese Republic are included.

Institution : .....

Submitted : .....

APPROVED FOR RELEASE: 07/12/2001 CIA-RDP86-00513R001032730002-3"

"APPROVED FOR RELEASE: 07/12/2001 CIA-RDP86-00513R001032730002-3

MASLENNIKOV, Vyacheslav Aleksandrovich,; KOVALEV, Ye. F., otv. red.; ~~SHVETSOV, N.I., red. izd-va,;~~ MAKUNI, Ye.V., tekhn. red.

[Economic structure of the Chinese People's Republic] Ekonomicheskii stroi Kitaiskoi Narodnoi Respubliki. Moskva, Izd-vo Akad. nauk SSSR, 1958. 390 p. (MIRA 11:11)
(China--Economic conditions)

APPROVED FOR RELEASE: 07/12/2001 CIA-RDP86-00513R001032730002-3"

"APPROVED FOR RELEASE: 07/12/2001 CIA-RDP86-00513R001032730002-3

MASLENNIKOV, Vyacheslav Aleksandrovich; MEDOVOY, A.I., red.; MOGILEVCHIK, A.Ye., red. izd-va; SHIKIN, S.T., tekhn. red.; YERKHOVA, Ye.A., tekhn. red.

[India on the way to independent development] Indiia na puti nezavisimogo razvitiia. Moskva, Izd-vo In-ta mezhdunarodnykh otnoshenii, 1962. 194 p. (MIRA 15:7)
(India—Economic conditions)

APPROVED FOR RELEASE: 07/12/2001 CIA-RDP86-00513R001032730002-3"

"APPROVED FOR RELEASE: 07/12/2001 CIA-RDP86-00513R001032730002-3

15-1957-10-13529

Translation from: Referativnyy zhurnal, Geologiya, 1957, Nr 10, pp 7-8

AUTHOR: Maslenikov, V. A.

TITLE: The Precambrian Crystalline Rocks of Southwestern Pamir (Dokembriyskaya kristallicheskaya tolshcha yugozapadnogo Pamira)

PERIODICAL: Tr. Labor. geologii dokembriya, AN SSSR, 1955, Nr 5, pp 189-254

ABSTRACT: A thick sequence of various gneisses, containing subordinate layers of marble and crystalline schists and cut by a variety of intrusions, is divided into eight series, distinguished by differences in the composition of the gneisses. Series 1 consists chiefly of biotite gneiss, with rare sillimanite-biotite and hornblende-biotite gneisses and with lenses of marble and amphibolite (2500 m). Series 2 is formed of biotite, sillimanite-biotite, kyanite-biotite, and garnet-biotite gneisses.

Card 1/4

APPROVED FOR RELEASE: 07/12/2001 CIA-RDP86-00513R001032730002-3"

"APPROVED FOR RELEASE: 07/12/2001 CIA-RDP86-00513R001032730002-3

15-1957-10-13529

The Precambrian Crystalline Rocks of Southwestern Pamir (Cont.)

Other rocks present are quartz-biotite-sillimanite schists--characterized by a complete lact of feldspar--quartzitic gneisses, numerous lenticular masses of amphibolite and, occasionally, marble (1500 m). Series 3 consists of biotite-hornblende and hornblende gneisses, with local layers of marble in the upper part (1000 m). Series 4 contains garnet-biotite and biotite gneisses, with occasional thin layers of marble (800 m). Series 5 is made up of biotite-garnet gneisses, with small lenses of marble (700 m). Series 6 consists of marbles interstratified with biotite, garnet-biotite, and hornblende-biotite gneisses (500 m). Series 7 is characterized by numerous alternations of biotite, biotite-garnet, biotite-sillimanite, biotite-hornblende. and pyroxene gneisses (2500 m). Series 8 comprises 4 subseries: a) biotite gneiss; b) biotite gneiss with layers of garnet-biotite, hornblende-biotite, and quartzitic gneisses with layers of marble; and d) biotite gneisses, cataclasites, and mylonites (5000 m). These rocks are permeated with concordant or discordant injections, dikes, and bodies of granite and pegmatite. The most widely distributed of the gneisses are the migmatites,

Card 2/4

APPROVED FOR RELEASE: 07/12/2001 CIA-RDP86-00513R001032730002-3"

"APPROVED FOR RELEASE: 07/12/2001 CIA-RDP86-00513R001032730002-3

15-1957-10-13529

The Precambrian Crystalline Rocks of Southwestern Pamir (Cont.)

encountered in practically all parts of the section. The intrusive formations, widely distributed in southwestern Pamir, are divided into three complexes. Complex I is a preorogenic body and is subdivided into two groups: 1) amphibolites and gabbro-amphibolites, pyroxenites, and hornblendites; and 2) leucocratic fine-grained gneissic granites (granulites). Complex II is a synorogenic intrusion and is also subdivided into two groups: 1) coarse-grained granodiorite augen gneisses; and 2) biotite and two-mica granites and gneissic granites. The intrusions of the first two complexes are distributed only in the gneiss-marble series and do not crop out beyond the limits of the metamorphic rocks; they are apparently Precambrian. The intrusions of complex III are not in contact with crystalline rocks. They are 1) Variscan two-mica and muscovite granites and biotite-granite augen gneisses of the Rushanskiy complex; 2) Cimmerian granites and granodiorites, commonly showing gradations to gabbro-diorites; and 3) Alpine porphyritic microcline granites. The problem of the age of the crystalline rocks is rather complex. To solve it the following facts should be kept in mind: 1) the

Card 3/4

APPROVED FOR RELEASE: 07/12/2001 CIA-RDP86-00513R001032730002-3"

"APPROVED FOR RELEASE: 07/12/2001 CIA-RDP86-00513R001032730002-3

The Precambrian Crystalline Rocks of the Southwestern Pamir (Cont.) 15-1957-10-13529

presence in the crystalline complex of four groups of intrusions, known to be pre-Cimmerian, which do not transect the surrounding sedimentary beds of the lower Paleozoic; 2) the absence of fossils in the metamorphic rocks; 3) the deep regional metamorphism of the rocks; 4) the distinctive features of the migmatites, similar to those of the migmatites on the Kol'skiy (Kola) Peninsula and in Kareliya; 5) the distinctive mineral group developed in the mineralized marbles (lazurite, phlogopite, and spinel), similar to the Archean formations of Zabaykal'ye (Transbaikal); and 6) the similarity between the composition of the metamorphic rocks and that of the ancient Precambrian complex of the western Kun'-Lun'. In view of these facts one can, with assurance, refer the crystalline rocks of southwestern Pamir to the Precambrian.

Card 4/4

A. L. Knipper

APPROVED FOR RELEASE: 07/12/2001 CIA-RDP86-00513R001032730002-3"

"APPROVED FOR RELEASE: 07/12/2001 CIA-RDP86-00513R001032730002-3

MASLENNIKOV, V.A.

NIKOLAYEV, V.A.; GORLOV, N.V., kandidat geologo-mineralogicheskikh nauk; SHURKIN, K.A., kandidat geologo-mineralogicheskikh nauk; SUDOVIKOV, N.G., doktor geologo-mineralogicheskikh nauk; MASLENNIKOV, V.A., kandidat geologo-mineralogicheskikh nauk; PRIYATKINA, L.A., geolog; POLKANOV, A.A., akademik, glavnyy redaktor; BABINTSEV, N.I., redaktor izdatel'stva; KRYNOCHKINA, K.V., tekhnicheskiy redaktor

[Practical guide to geological mapping of metamorphic complexes] Metodicheskoe rukovodstvo po geologicheskomu kartirovaniiu metamorficheskikh kompleksov. Pod red. V.A.Nikolaeva. Moskva, Gos.nauchno-tekhn.izd-vo lit-ry po geol. i okhrane nedr, 1957. 450 p. (MLRA 10:9)

1. Akademiya nauk SSSR. Laboratoriya geologii dokembriya. 2. Chlen-korrespondent Akademii nauk SSSR (for Nikolayev). 3. Laboratoriya geologii dokembriya Akademii nauk SSSR (for Nikolayev, Gorlov, Shurkin, Sudovikov, Maslennikov, Priyatkina)
(Geology--Maps)

APPROVED FOR RELEASE: 07/12/2001 CIA-RDP86-00513R001032730002-3"

"APPROVED FOR RELEASE: 07/12/2001 CIA-RDP86-00513R001032730002-3

MASLENNIKOV, V.A.

Genesis of magmatic differentiation in titanomagnetite mineralization. Trudy Lab. geol. dokam. no.7:23-37 '57. (MIRA 11:3)
(Titanomagnetite)

APPROVED FOR RELEASE: 07/12/2001 CIA-RDP86-00513R001032730002-3"

"APPROVED FOR RELEASE: 07/12/2001 CIA-RDP86-00513R001032730002-3

MASLENIKOV, V.A.

Remarks on the figures pertaining to the absolute age of rocks in the Kola Peninsula. Trudy Lab.geol. dokem. no.9:48 '59. (MIRA 13:11) (Kola Peninsula--Rocks) (Geological time)

APPROVED FOR RELEASE: 07/12/2001 CIA-RDP86-00513R001032730002-3"

"APPROVED FOR RELEASE: 07/12/2001 CIA-RDP86-00513R001032730002-3

MASLENIKOV, V.A.; PRIYATKINA, L.A.

Petrographic and petrochemical features of Proterozoic granites in the Kontozero region (Kola Peninsula). Trudy Lab.geol. dokem. no.9:158-175 '59. (MIRA 13:11)

(Kola Peninsula--Granite)

APPROVED FOR RELEASE: 07/12/2001 CIA-RDP86-00513R001032730002-3"

"APPROVED FOR RELEASE: 07/12/2001 CIA-RDP86-00513R001032730002-3

YELISEYEV, Nikolay Aleksandrovich; GORBUNOV, Grigoriy Ivanovich; YELISEYEV, Erik Nikolayevich; MASLENIKOV, Vladimir Alekseyevich; UTKIN, Konstantin Nikolayevich [deceased]; POLKANOV, A.A., akademik, glavnyy red.; YELISEYEV, N.A., otv.red.; DOLMATOV, P.S., red.izd-va; BLEYKH, E. Yu., tekhn.red.

[Ultrabasic and basic intrusions in Pechenga District; geology and structure, petrography, minerals and ores, geochemistry of nickel] Ul'traosnovnye i osnovnye intruzii Pechengi; geologiia i struktura petrografiia, mineraly i rudy, geokhimiia nikelia. Moskva, Izd-vo Akad.nauk SSSR. 1961. 357 p. (Akademiia nauk SSSR. Laboratoriia geologii dokembriia, Trudy, no.10) (MIRA 14:3)

1. Chlen-korrespondent AN SSSR (for Yeliseyev).
(Pechenga District--Geology)

APPROVED FOR RELEASE: 07/12/2001 CIA-RDP86-00513R001032730002-3"

"APPROVED FOR RELEASE: 07/12/2001 CIA-RDP86-00513R001032730002-3

MASLENIKOV, V.A.; BONDARENKO, L.P.; DAGELAYSKIY, V.P.

Ancient rocks of the Kola Peninsula. Trudy Lab.geol.dokem. no.12:133-155 '61. (MIRA 14:11)

(Kola Peninsula--Petrology)
(Kola Peninsula--Geological time)

APPROVED FOR RELEASE: 07/12/2001 CIA-RDP86-00513R001032730002-3"

"APPROVED FOR RELEASE: 07/12/2001 CIA-RDP86-00513R001032730002-3

DZEVANSKIY, Yu.K.; DODIN, A.L.; KONIKOV, A.Z.; KRASNYY, L.I.; MAN'KOVSKIY, V.K.; MOSHKIN, V.N.; LYATSKIY, V.B.; NIKOL'SKAYA, I.P.; SALOP, L.I.; SALUN, S.A.; RABKIN, M.I.; RAVICH, M.G.; POSPELOV, A.G.; NIKOLAYEV, A.A.; IL'IN, A.V.; BUZIKOV, I.P.; MASLENNIKOV, V.A.; NEYELOV, A.N.; NIKITINA, L.P.; NIKOLAYEV, V.A.[deceased]; OBRUCHEV, S.V.; SAVEL'YEV, A.A.; SEDOVA, I.S.; SUDOVIKOV, N.G.; KHIL'TOVA, V.Ya.; NAGIBINA, M.S.; SHEYNMANN, Yu.M.; KUZNETSOV, V.A.; KUZNETSOV, YU.A.; BORUKAYEV, R.A.; LYAPICHEV, G.F.; NALIVKIN, D.V., glav. red.; VERESHCHAGIN, V.N., zam. glav. red.; MENNER, V.V., zam. glav. red.; OVECHKIN, N.K., zam. glav. red.[deceased]; SOKOLOV, B.S., red.; SHANTSER, Ye.V., red.; MODZALEVSKAYA, Ye.A., red.; CHUGAYEVA, M.N., red.; GROSSGEYM, V.A., red.; KELLER, B.M., red.; KIPARISOV, L.D., red.; KOROBKOV, M.A., red.; KRASNOV, I.I., red.; KRYMGOL'TS, T.Ya., red.; LIBROVICH, L.S., red.; LIKHAREV, B.K., red.; LUPPOV, N.P., red.; NIKIFOROVA, O.I., red.; POLKANOV, A.A., red.[deceased]; RENGARTEN, V.P., red.; STEPANOV, D.L., red.; CHERNYSHEVA, N.Ye., red.; SHATSKIY, N.S., red.[deceased]; EBERZIN, A.G., red.; SMIRNOVA, Z.A., red.izd-va; GUROVA, O.A., tekhn. red.

[Stratigraphy of the U.S.S.R. in fourteen volumes. Lower Pre-Cambrian] Stratigrafiia SSSR v chetyrnadtsati tomakh. Nizhnii Dokembrii. Moskva, Gos. nauchno-tekhn. izd-vo lit-ry po geologii i okhrane nedr. Pt. 1 (Asiatic part of the USSR) 1963. 396p.

APPROVED FOR RELEASE: 07/12/2001 CIA-RDP86-00513R001032730002-3"

"APPROVED FOR RELEASE: 07/12/2001 CIA-RDP86-00513R001032730002-3

MASLENNIKOV, V.A.

2

A.A. POLKANOV, V.A. MASLENNIKOV, K.A. SHURKIN (USSR)

"A leading physico-chemical trend in process of granit formation."

Report presented at the Conference on Chemistry of the Earth's Crust, Moscow, 14-19 Mar 63.

APPROVED FOR RELEASE: 07/12/2001 CIA-RDP86-00513R001032730002-3"

"APPROVED FOR RELEASE: 07/12/2001 CIA-RDP86-00513R001032730002-3

MASLENNIKOV, V.D; TSUKERSHTEYN, O.Ye.

Leucocytosis and absolute monocytosis following Valdman's cup endothelial test. Lab. delo 7 no.3:22-25 Mr '61. (MIRA 14:3)

(LEUCOCYTOSIS) (RHEUMATIC FEVER)

APPROVED FOR RELEASE: 07/12/2001 CIA-RDP86-00513R001032730002-3"

"APPROVED FOR RELEASE: 07/12/2001 CIA-RDP86-00513R001032730002-3

L 39313-65

ACCESSION NR: AP5009550

layer. A schematic diagram of the setup (see Fig. 1 of the Enclosure) and a description of the experimental procedure are given. Oscillographs of the flow over bodies of various hemispherical shapes and at various velocities from 500 to 2000 m/sec are presented. Theoretical date, with $\gamma = 1.4$, are compared with the results of experimental measurements of the stand-off distance in air from a hemispherical model 15 mm in diameter, at initial pressures of 100 mm Hg and 1 atm, at velocities of M = 1 to 7, and in carbon-dioxide from a hemispher[illegible]

APPROVED FOR RELEASE: 07/12/2001 CIA-RDP86-00513R001032730002-3"

"APPROVED FOR RELEASE: 07/12/2001 CIA-RDP86-00513R001032730002-3

Card 2/4

EWT(m)/EWP(j) RM

ACC NR: AP6012643 SOURCE CODE: UR/0079/65/035/001/0075/0077

AUTHOR: Imayev, M. G.; Maslennikov, V. G.; Gorina, V. M.; Krasheninikova, O. S.

ORG: Bashkir State University (Bashkirskiy gosudarstvennyy universitet)

TITLE: Transesterification of dimethylphosphite by aliphatic alcohols

SOURCE: Zhurnal obshchey khimii, v. 35, no. 1, 1965, 75-77

TOPIC TAGS: aliphatic alcohol, ester, organic phosphorous compound

ABSTRACT: The reaction of transesterification of dimethylphosphite by aliphatic alcohols both in the presence of catalysts (sodium alcoholate) as well as in their absence is reported. Experiments have shown that a mixture of the corresponding methylalkyl- and dialkylphosphites is always formed.

$$(CH_3O)_2POH + ROH \rightleftharpoons (CH_3O)(RO)POH + CH_3OH$$
$$\rightleftharpoons (RO)_2POH + 2CH_3OH$$

Data showed that the reaction of partial transesterification of dimethyl phosphite to obtain methylal

APPROVED FOR RELEASE: 07/12/2001 CIA-RDP86-00513R001032730002-3"

"APPROVED FOR RELEASE: 07/12/2001 CIA-RDP86-00513R001032730002-3

L 21800-66

ACC NR: AP6012643

phites into symmetr' al species upon their distillation. The total transesterification of dimethylphosphite in symmetrical dialkylphosphites was studied in the presence of sodium alcoholate, as catalyst, in a dioxane medium (no catalyst present), and in excess n-butyl alcohol; it was determined that, when dioxane or excess alcohol is present, the rate of dimethylphosphite alcoholysis is not dependent in the presence of a catalyst. Seven methylalkyl phosphites not previously described in the literature were synthesized and identified. Orig. art. has: 1 table. [JPRS]

SUB CODE: 07 / SUBM DATE: 12Oct63 / ORIG REF: 006 / OTH REF: 001

Card 2/2

APPROVED FOR RELEASE: 07/12/2001 CIA-RDP86-00513R001032730002-3"

"APPROVED FOR RELEASE: 07/12/2001 CIA-RDP86-00513R001032730002-3

L 21854-66 EWP(j)/EWT(m) RM

ACC NR: AP6012656 SOURCE CODE: UR/0079/65/035/002/0372/0377

AUTHOR: Imayev, M. G.; Gorina, V. M.; Maslennikov, V. G.

ORG: Bashkir State University (Bashkirskiy gosudarstvennyy universitet)

25
B

TITLE: Structure of addition products of thiourea to dialkylphosphites

SOURCE: Zhurnal obshchey khimii, v. 35, no. 2, 1965, 372-377

TOPIC TAGS: organic phosphorous compound, urea, chemical structure, UV spectrum

ABSTRACT: In order to establish the structure of the addition produce of thiourea to dialkylphosphites, the capacity of these compounds to add on elemental sulfur was studied along with the ultraviolet spectra. In contrast to existing data, the authors found that the addition products of thiourea to dialkylphosphites furthur add on sulfur in an acetone, dioxane, or toluene medium to form the thiourea salt of dialkylthiophosphoric acid. It was established that the addition products of thiourea to dialkylphosphites are thiourea salts of dialkylphosphoric acids with trivalent phosphorus. Thiourea salts of 14 dialkylphosphoric acids not described in the literature were isolated and identified. The corresponding thiourea salts of dialkyomonothiophosphoric acid were obtained by addition of sulfur to thiourea salts of dialkylphosphorus acids. Orig. art. has: 1 figure and 2 tables. [JPRS]

SUB CODE: 07 / SUBM DATE: 12Oct63 / ORIG REF: 008 / OTH REF: 004

Card 1/1

UDC: 546.183+547.496.3

APPROVED FOR RELEASE: 07/12/2001 CIA-RDP86-00513R001032730002-3"

"APPROVED FOR RELEASE: 07/12/2001 CIA-RDP86-00513R001032730002-3

MASLENNIKOV, V.M.

[Machine-tractor stations on virgin land; practices of the Novo-Yegor'yevskoye Machine-tractor Station in Altai Territory] MTS na tseline; iz opyta raboty Novo-Egor'evskoi MTS Altaiskogo kraia. Moskva, Gos.izd-vo sel'khoz.lit-ry, 1957. 85 p. (MIRA 11:1)
(Altai Territory--Machine-tractor stations)

APPROVED FOR RELEASE: 07/12/2001 CIA-RDP86-00513R001032730002-3"

"APPROVED FOR RELEASE: 07/12/2001 CIA-RDP86-00513R001032730002-3

MASLENNIKOV, V.M.

Control computers form the base for over-all automation of production processes. Priborostroenie no.9:9-12 S '61. (MIRA 14:9)
(Electronic calculating machines)

APPROVED FOR RELEASE: 07/12/2001 CIA-RDP86-00513R001032730002-3"

"APPROVED FOR RELEASE: 07/12/2001 CIA-RDP86-00513R001032730002-3

MALINOVSKIY, B.N.; GLUSHKOV, V.M., akademik, retsenzent; MASLENNIKOV, V.M., inzh., red.; STROGONOV, L.P., red. izd-va; SOKOLOVA, T.F., tekhn. red.

[Digital control machinery and automation of production processes] TSifrovye upravliaiushchie mashiny i avtomatizatsiia proizvodstva. Moskva, Mashgiz, 1963. 287 p. (MIRA 17:3)

1. Akademiya nauk Ukr.SSR (for Glushkov).

APPROVED FOR RELEASE: 07/12/2001 CIA-RDP86-00513R001032730002-3"

"APPROVED FOR RELEASE: 07/12/2001 CIA-RDP86-00513R001032730002-3

1. DANOV, G. A.; MASLENNIKOV, V. M.

2. USSR (600)

4. Cotton - Diseases and Pests

7. Problem of the falling ovaries on cotton in connection with the sprinkling irrigation. Dokl. Ak. sel'khoz. 17 no. 9, 1952

9. Monthly List of Russian Accessions, Library of Congress, January 1953. Unclassified.

APPROVED FOR RELEASE: 07/12/2001 CIA-RDP86-00513R001032730002-3"

"APPROVED FOR RELEASE: 07/12/2001 CIA-RDP86-00513R001032730002-3

USSR / Farm Animals, Cattle Q-2

Abs Jour: Ref Zhur-Biol, No 2, 1958, 7133

Author : V. N. ~~Maslennikov~~
Inst : Moscow Veterinary Academy
Title : The Organization of the Breeding of Pedigreed Large Horned Cattle of the Kostroma Breed in Tenant Farms of Plemsovkhozes "Karavayevo," Plemsovkhozes "Luzhki," and "Zarya."

Orig Pub: Tr. Mosk. vet. akad. 1957, 19, No 1, 99-111

Abstract: No abstract.

Card 1/1

APPROVED FOR RELEASE: 07/12/2001 CIA-RDP86-00513R001032730002-3"

"APPROVED FOR RELEASE: 07/12/2001 CIA-RDP86-00513R001032730002-3

MASLENNIKOV, V.N., Cand Agr Sci -- (diss) "~~Bredding methods~~ Methods of breeding work based ~~on the improving~~ upon improvement of Kostroma cattle in the breeding farms "Luzhki" and "Zarya"." Mos, 1959, 1959, (Mos Vet Acad of Min of Agr RSFSR) 140 copies

(KL, 34-59, 115)

APPROVED FOR RELEASE: 07/12/2001 CIA-RDP86-00513R001032730002-3"

"APPROVED FOR RELEASE: 07/12/2001 CIA-RDP86-00513R001032730002-3

MASLENIKOV, V.N., gornyy inzhener.

Relation of the mechanical properties of rocks to the size and shape of specimens tested. Gor.zhur.no.12:14-17 D '56. (MLRA 10:1)
(Rocks--Testing)

APPROVED FOR RELEASE: 07/12/2001 CIA-RDP86-00513R001032730002-3"

"APPROVED FOR RELEASE: 07/12/2001 CIA-RDP86-00513R001032730002-3

MASLENNIKOV, V. N.

"The Transition from Underground to Open-Pit Mining is the Best Way to Eliminate the Danger of Underground Pyrite Fires at the Blyavia Mine" Tsvet. Met. 14, No. 9, September 1939.

Report U-1506, 4 Oct. 1951

APPROVED FOR RELEASE: 07/12/2001 CIA-RDP86-00513R001032730002-3"

"APPROVED FOR RELEASE: 07/12/2001 CIA-RDP86-00513R001032730002-3

MASLENNIKOV, V.N.

Automobile windshield washers designed by the Scientific Research Experimental Institute for Automobile and Tractor Electrical Equipment and Devices. Avt.prom. no.9:42-44 S '61. (MIRA 14:9)

1. Nauchno-issledovatel'skiy eksperimental'nyy institut avtotraktornogo elektrooborudovaniya i priborov.
(Automobiles--Windows and windshields)

APPROVED FOR RELEASE: 07/12/2001 CIA-RDP86-00513R001032730002-3"

"APPROVED FOR RELEASE: 07/12/2001 CIA-RDP86-00513R001032730002-3

8 5826

10-9330

S/123/60/000/020/018/019
A005/A001

Translation from: Referativnyy zhurnal, Mashinostroyeniye, 1960, No. 20, p. 476, # 113259

AUTHORS: Chupilko, G. Ye., Kokonin, S. S., Reut, A. V., Maslennikov, V. P.

TITLE: Automatical Braking the Aircraft at Landing Run

PERIODICAL: V sb.: Povysheniye effektivnosti tormozn. ustroystv. Svoystva frikts. materialov. Moscow, AN SSSR, 1959, pp. 26-45

TEXT: Pulse systems are described of automatical braking of remote action with an electrochemical inertia transmitter of pulses. The diagram of the system and the graphic characteristics of its operation are presented. The criteria of the effectiveness of the system are described; the 1- and 2-signal systems of automatical braking are compared, and the working principle is described. The diagram of the hydraulic system of automatic braking of a heavy aircraft is presented. New diagrams of the automatic braking system and their units are described, among them the automatic braking system with program control of the braking moment, their advantages and imperfections are pointed out. Diagrams and graphs are given.

A. L. V.

Translator's note: This is the full translation of the original Russian abstract.

Card 1/1

APPROVED FOR RELEASE: 07/12/2001 CIA-RDP86-00513R001032730002-3"

"APPROVED FOR RELEASE: 07/12/2001 CIA-RDP86-00513R001032730002-3

KLAZS, B.N., inzh.; MASLENNIKOV, V.P., inzh.

Universal electronic block for automatic stopping of knitting machines. Mekh.i avtom.proizv. 15 no.11:49 N '61. (MIRA 14:11)
(Knitting machines) (Electronic control)

APPROVED FOR RELEASE: 07/12/2001 CIA-RDP86-00513R001032730002-3"

"APPROVED FOR RELEASE: 07/12/2001 CIA-RDP86-00513R001032730002-3

MASLENNIKOV, V.V., i GIMCHIN, A.P.

"Experimental Investigation of Slot Antennas" (Eksperimental'noye issledovaniye shchelevykh antenn). Izd NII Ministerstva aviatsionnoy promyshlennosti SSSR (Publishing House of the Scientific Research Institute of the Ministry of the Aviation Industry USSR), 25 pp., 1947

APPROVED FOR RELEASE: 07/12/2001 CIA-RDP86-00513R001032730002-3"

"APPROVED FOR RELEASE: 07/12/2001 CIA-RDP86-00513R001032730002-3

MASLENNIKOV, V. V.

Maslennikov, V. V. - "The absorption of ultra-short electro-magnetic waves by water electrolytes", Doklady (Mosk. s.-kh. akad. im. Timiryazeva), Issue 8, 1948, (In index: 1949), p. 101-10.

SO: U-411, 17 July 53, (Letopis 'Zhurnal 'nykh Statey, No. 20, 1949).

APPROVED FOR RELEASE: 07/12/2001 CIA-RDP86-00513R001032730002-3"

"APPROVED FOR RELEASE: 07/12/2001 CIA-RDP86-00513R001032730002-3

MASLENNIKOV, V. V., ed.

Economy of materials resources in the S. Ordzhonikidze Urals Heavy Machinery Construction Plant; collection of articles. Moskva. Redaktsionno-izdatel'skii sektor Gossnaba SSSR. 1952. 120 p. (55-23281)

TJ86.U7M3

1. Ural'skii mashinostroitel'nyi zavod, Sverdlovsk.

APPROVED FOR RELEASE: 07/12/2001 CIA-RDP86-00513R001032730002-3"

"APPROVED FOR RELEASE: 07/12/2001 CIA-RDP86-00513R001032730002-3

MASLENNIKOV, Ye. A.

GRABLIN, Ye.A.; MASLENNIKOV, Ye.A.

Oil- and gas-bearing prospects of Devonian deposits in the zone of the Don-Medveditsa dislocations. Geol. nefti 1 no.1:20-24 Ja '57. (MIRA 10:8)

(Stalingrad Province--Geology, Structural)

APPROVED FOR RELEASE: 07/12/2001 CIA-RDP86-00513R001032730002-3"

"APPROVED FOR RELEASE: 07/12/2001 CIA-RDP86-00513R001032730002-3

MASLENNIKOV, Ye.A.

Tectonic division of the northwestern part of the Caspian Sea region and oil and gas potentials. Geol.nefti 2 no.9:44-52 S '58. (MIRA 11:10)

1.Trest "Stalingradneftegazrazvedka."
(Caspian Sea region--Geology, Structural)

APPROVED FOR RELEASE: 07/12/2001 CIA-RDP86-00513R001032730002-3"

"APPROVED FOR RELEASE: 07/12/2001 CIA-RDP86-00513R001032730002-3

MASLENNIKOV, Ye.A.; NEKRASOV, A.N.; PUSTOVOYT, Yu.M.

Generation and maintenance of pressures below 1.10^{-8} tor. in large metal vessels. Prib. i tekh. eksp. 8 no.5:148-156 S-O '63. (MIRA 16:12)

APPROVED FOR RELEASE: 07/12/2001 CIA-RDP86-00513R001032730002-3"

"APPROVED FOR RELEASE: 07/12/2001 CIA-RDP86-00513R001032730002-3

L 23094-66 EWT(1)/EWT(m)/EWP(t)/EWA(h) IJP(c) JD/WW/GG

ACC NR: AP6007081 UR/0057/66/036/002/0316/0323

55
52
B

AUTHOR: Butuzov, S.S.; Konyayev, V.P.; Maslennikov, Ye.A.; Pustovoyt, Yu.M.

ORG: None

TITLE: Achievement of ultrahigh vacuum in the Ogra-1 installation

SOURCE: Zhurnal tekhnicheskoy fiziki, v. 36, no. 2, 1966, 316-323

TOPIC TAGS: ultrahigh vacuum, high vacuum technique, vacuum chamber, titanium, sorption, magnetic mirror machine

ABSTRACT: In this paper there are discussed in detail the problems encountered in attempting to achieve ultrahigh vacuum in the Ogra-1 magnetic mirror system. When the machine was constructed in 1958 the pumping system consisted of four banks of mercury vapor pumps with a pumping rate of 2500 liter/sec and a limiting vacuum of 3×10^{-7} mm Hg and type SIN-20-5 ion sorption pumps with a pumping rate of 7000 liter/sec. In addition, titanium was deposited directly on the wall of the chamber at the rate of 0.5 g/min from each of three evaporators. Only three-quarters of the inner surface of the chamber could be heated to 400°C for outgassing. Under these conditions a vacuum better than 3×10^{-8} mm Hg was never achieved. In 1960 there were introduced four liquid nitrogen cooled titanium sorption pumps. These consisted of hollow copper cylinders with a total area of about 20 m^2 cooled by liquid nitrogen flowing in copper tubes soldered to the outer walls, on the inner surfaces of which titanium was deposit-

Card 1/2 UDC: 533.9

APPROVED FOR RELEASE: 07/12/2001 CIA-RDP86-00513R001032730002-3"

"APPROVED FOR RELEASE: 07/12/2001 CIA-RDP86-00513R001032730002-3

L 23094-66

ACC NR: AP6007081

3

ed at the rate of 0.1 g/min by each of six evaporators. The total hydrogen pumping rate was approximately 4 x 10^6 liter/sec. In 1962 there was installed a liner that could be electrically heated to 400°C. A vacuum of 10^{-6} mm Hg was maintained outside the liner, and leakage through the liner corresponded to flow through a total open area of 4 cm^2. The liquid nitrogen cooled titanium pumps must be supplemented by high speed diffusion pumps to remove those components of the residual gas (mainly argon) that are not adsorbed by the titanium. A vacuum of 10^{-10} mm Hg was achieved with this system in the absence of ion injection and the presence of a lithium arc of the type developed in the laboratory of V.A.Simonov. It is concluded that it is possible to achieve ultrahigh vacuum in a large system with many joints, but that the problem of maintaining a vacuum of 10^{-10} mm Hg in the Ogra-1 machine cannot be regarded as satisfactorily solved. The authors thank I.N.Golovin and V.A.Simonov for discussions and valuable advice, and their coworkers for participating in the experiments. Orig. art. has: 5 figures.

SUB CODE: 13 SUBM DATE: 31May65/ ORIG REF: 008/ OTH REF: 001

UVR

Card 2/2

APPROVED FOR RELEASE: 07/12/2001 CIA-RDP86-00513R001032730002-3"

"APPROVED FOR RELEASE: 07/12/2001 CIA-RDP86-00513R001032730002-3

MASLENNIKOV, Ye.D.

Ice flow has passed. Avt.dor. 25 no.4:11 Ap '62. (MIRA 15:5)
(Ice on rivers, lakes, etc.)

APPROVED FOR RELEASE: 07/12/2001 CIA-RDP86-00513R001032730002-3"

"APPROVED FOR RELEASE: 07/12/2001 CIA-RDP86-00513R001032730002-3

KARASIK, M.Ye., MASLENNIKOV, Ye. F., nachal'nik stroitel'stva.

Installing bridge decking made of large-sized reinforced concrete blocks. Transp. stroi. 5 no. 10:7-9 D '55. (MLRA 9:3)

1. Nachal'nik Dnepropetrovskoy normativno-issledovatel'skoy stantsii Orgtransstroya (for Karasik).
(Bridges, concrete)

APPROVED FOR RELEASE: 07/12/2001 CIA-RDP86-00513R001032730002-3"

"APPROVED FOR RELEASE: 07/12/2001 CIA-RDP86-00513R001032730002-3

RUBEL', Raisa Borisovna; MASLENNIKOV, Yevgeniy Polikarpovich; KATKOVA, N., red.; SAKNYN', Yu., khudozh.-tekhn.red.

[Through the Central Urals] Po srednemu Uralu. Sverdlovsk, Sverdlovskoe knizhnoe izd-vo, 1959. 236 p. (MIRA 13:3)
(Ural Mountain region--Description and travel)

APPROVED FOR RELEASE: 07/12/2001 CIA-RDP86-00513R001032730002-3"