"APPROVED FOR RELEASE: 06/14/2000 CIA-RDP86-00513R001033110003-9

67895

SOV/144-59-12-13/21

An Electro-Magnetic Peak Generator for Grid Control of Ionic Instruments

angle governing the width of the impulse may be obtained by substituting in Eq (1) the appropriate boundary conditions when the secondary current is zero. The resultant Eq (2) may be used to determine the impulse-width angle as a function of the ratio of secondary reactance to resistance. The graphs used in Fig 2 can also serve to determine the various currents as functions of the ratio of secondary reactance to resistance. To determine the steepness of the wave front and the shape of the secondary voltage, the equivalent circuit of Fig 2a should be used. It corresponds to blocking of the valve type DGTs. Eq (9) is derived for the secondary voltage in this case. The effective value of the output voltage may then be determined from Eq (11). The theory given above was used to design an experimental impulse generator to control a rectifier type RM-200. The generator, sketched in Fig 3, was made of ordinary transformer steel of E-section and the principal dimensions are given. Fig 4a and 4b show calculated graphs of its output voltage for different values of limiting resistance

Card 3/5

APPROVED FOR RELEASE: 06/14/2000 CIA-RDP86-00513R001033110003-9"

"APPROVED FOR RELEASE: 06/14/2000 CIA-RDP86-00513R001033110003-9

67895

SOV/144-59-12-13/21

An Electro-Magnetic Peak Generator for Grid Control of Ionic Instruments

Experimental curves derived from the oscillograms of Fig 5 are also included and indicate satisfactory agreement between theory and experiment. The differences that are observed arise from the appreciable magnetizing current of the primary winding resulting from saturation of the core by the d.c. component of the secondary current. Fig 5 shows oscillograms of primary voltage, output voltage and current through the valve of an experimental peak generator when the impulse width is 120° (Fig 5a) and 75° (Fig 5b) It will be seen that the wave shape is analogous to that obtained from conventional generators By combining the functions of insulating transformer and the peak generator into a single device the construction is greatly simplified The peak width and amplitude can easily be controlled and two signals displaced by 180° can be obtained if necessary. The peak generator is cheap and easy to make. The apparent output of 89 VA can be increased by a further 10 to 15 VA by using thinner laminations or by improving their insulation. A numerical example of the

Card 4/5

APPROVED FOR RELEASE: 06/14/2000 CIA-RDP86-00513R001033110003-9"

"APPROVED FOR RELEASE: 06/14/2000 CIA-RDP86-00513R001033110003-9

67895

SOV/144-59-12-13/21

An Electro-Magnetic Peak Generator for Grid Control of Ionic Instruments

design of a peak generator is given in an appendix
There are 5 figures, 1 table and 5 Soviet references.

ASSOCIATION: Khar'kovskiy politekhnicheskiy institut (Khar'kov Polytechnical Institute)

SUBMITTED: October 2, 1959

Card 5/5

APPROVED FOR RELEASE: 06/14/2000 CIA-RDP86-00513R001033110003-9"

"APPROVED FOR RELEASE: 06/14/2000 CIA-RDP86-00513R001033110003-9

SOV/110-59-2-9/21

AUTHORS: Mayevskiy, O.A., Candidate of Technical Sciences, and Dolbnya, V.T., Engineer

TITLE: An Asymmetric Grid-Control System with Electro-Magnetic Commutator (Sistema nesimmetrichnogo setochnogo upravleniya s elektromagnitnym kommutatorom)

PERIODICAL: Vestnik Elektropromyshlennosti, 1959, 30, Nr 2, pp 31-37 (USSR)

ABSTRACT: The use of ionic rectifiers to supply electric drives that are widely regulated is restricted because as the speed of the motor is reduced below the rated value, the power factor of the installation falls. Methods that have been suggested to overcome this difficulty include either main current switching, the use of expensive static capacitors, or additional rectifiers. However, the method of asymmetric grid control, described by Uhlmann in Elektrotechnik und Maschinenbau, 1937, p 309, can be used to improve the power factor over a wide range of output voltage simply by altering the low powered grid circuit. The essence of the method is that the ignition angles of the rectifier valves are not maintained constant during operation but are altered at different periods of ignition of each valve according to a certain cycle, with

Card 1/4

APPROVED FOR RELEASE: 06/14/2000 CIA-RDP86-00513R001033110003-9"

"APPROVED FOR RELEASE: 06/14/2000 CIA-RDP86-00513R001033110003-9

SOV/110-59-2-9/21

An Asymmetric Grid-Control System with Electro-Magnetic Commutator

certain restrictions on the number of changes of ignition angle during a complete cycle. The advantages of the system are briefly described. Two rectifier circuits with asymmetric grid control for 6 and 12 phase arrangements are given in Fig 1. Performance curves for these circuits are given in Fig 2. The output of the rectifier transformer is the same with asymmetric grid control as with normal grid control. The divider coils are somewhat bigger with asymmetric grid control, but as this is all that there is to it the method of asymmetric control is very useful for increasing the power factor of both existing operating installations and newly designed ones, because considerable economic effect can be obtained without introducing any new element into the power circuit. The method of asymmetric grid control has been little used because the grid control system used in existing installations is complicated and unreliable. Steps that should be taken to correct this situation are discussed. In particular, there is need of a control system such that by the addition of a small supplementary part, existing systems could be converted to asymmetric

Card 2/4

APPROVED FOR RELEASE: 06/14/2000 CIA-RDP86-00513R001033110003-9"

"APPROVED FOR RELEASE: 06/14/2000 CIA-RDP86-00513R001033110003-9

SOV/110-59-2-9/21

An Asymmetric Grid-Control System with Electro-Magnetic Commutator

control. This can be done very simply by a device called an electro-magnetic commutator, a schematic circuit diagram of which is given in Fig 3. The circuit is described and the operating principles are explained. It is shown that the electro-magnetic commutator can ensure successive delivery of practically undistorted control signals to the grids of two rectifiers, as is required for asymmetric control. Curves of the output voltage of one of a three-phase group of rectifiers connected according to circuit 1 of Fig 1a are given in Fig 4. The control signals are also given in this figure and the method of operation is clearly seen. A circuit for the successive control of two-phase rotators and graphs of the relationship between the control currents in the phase windings and the control voltages are given in Fig 5. The method of operation of this part of the circuit is explained. Brief details are given of practical tests with this circuit which show that it operates satisfactorily. The following advantages are claimed for the circuit. It is easy to convert existing 6 and 12 phase rectifiers to asymmetric grid control by

Card 3/4

APPROVED FOR RELEASE: 06/14/2000 CIA-RDP86-00513R001033110003-9"

"APPROVED FOR RELEASE: 06/14/2000 CIA-RDP86-00513R001033110003-9

SOV/110-59-2-9/21

An Asymmetric Grid-Control System with Electro-Magnetic Commutator

the addition of a single electro-magnetic commutator panel, which is small and cheap. Static control can be obtained over the entire range of output voltage so that existing types of automatic regulators can be used for d.c. drives with rectifier supply. Because of the improvement of power factor at low speeds the pay-off time of the equipment is less than two years if it operates for 30% of the time at reduced speeds. Asymmetric control is most suitable for high power drives, for example, on rolling mills. An appendix gives the design of the components of an asymmetric grid control system applied to two rectifiers type RM-200 operating in parallel.

Card 4/4 There are 6 figures and 5 references, 4 of which are Soviet and 1 German.

SUBMITTED: July 25, 1958

APPROVED FOR RELEASE: 06/14/2000 CIA-RDP86-00513R001033110003-9"

"APPROVED FOR RELEASE: 06/14/2000 CIA-RDP86-00513R001033110003-9

MAYEVSKIY, O.A., kand.tekhn.nauk; DOLBNYA, V.T., kand.tekhn.nauk;

Ionic converters with nonsymmetric net control and zero valves.
Izv.vys.ucheb.zav.; energ. 3 no.6:45-52 Je '60.
(MIRA 13:6)

1. Khar'kovskiy politekhnicheskiy institut imeni V.I.Lenina.
Predstavlena kafedroy elektrifikatsii promyshlennykh predpriyatiy.
(Electric current converters)

APPROVED FOR RELEASE: 06/14/2000 CIA-RDP86-00513R001033110003-9"

"APPROVED FOR RELEASE: 06/14/2000 CIA-RDP86-00513R001033110003-9

MAYEVSKIY, O.A.

Semiconductor step-wise controlled electric current rectifiers.
Trudy KhPI 30 no.1:111-136 '60. (MIRA 14:9)
(Electric current rectifiers) (Germanium diodes)

APPROVED FOR RELEASE: 06/14/2000 CIA-RDP86-00513R001033110003-9"

"APPROVED FOR RELEASE: 06/14/2000 CIA-RDP86-00513R001033110003-9

MAYEVSKIY, O.A.; BONDARENKO, V.P.

Apparent power and the power coefficient of uncontrolled three-phase current rectifiers with nonsymmetric anode voltages. Trudy KhPI 30 no.1:137-150 '60. (MIRA 14:9)
(Electric current rectifiers)

APPROVED FOR RELEASE: 06/14/2000 CIA-RDP86-00513R001033110003-9"

"APPROVED FOR RELEASE: 06/14/2000 CIA-RDP86-00513R001033110003-9

MAYEVSKIY, O.A., dots., kand. tekhn. nauk; SVECHNIKOV, S.V., kand. tekhn. nauk, dots., otv. red.; TETEL'BAUM, Ya.I., kand. tekhn. nauk, dots., otv. red.; VYADRO, Sh.Ya., red.; MATVIICHUK, A.A., tekhn. red.

[Electronics in technology and automatic control] Elektronika v tekhnologii i avtomatike. Kiev, 1961. 40 p. (Obshchestvo po rasprostraneniiu politicheskikh i nauchnykh znanii Ukrainskoi SSR, Ser.7, no.7) (MIRA 14:11)

(Automatic control) (Electronics)

APPROVED FOR RELEASE: 06/14/2000 CIA-RDP86-00513R001033110003-9"

"APPROVED FOR RELEASE: 06/14/2000 CIA-RDP86-00513R001033110003-9

MAYEVSKIY, OLEG ALAKSEYEVICH, kand.tekhn.nauk, dotsent

Ionic three-phase current converters with multistage plate voltages. Izv.vys. ucheb. zav.; elektromekh. 4 no.7:50-63 '61. (MIRA 14:7)

1. Kafedra elektrifikatsii promyshlennykh predpriyatiy Khar'kovskogo politekhnicheskogo instituta.
(Electric current converters)

APPROVED FOR RELEASE: 06/14/2000 CIA-RDP86-00513R001033110003-9"

"APPROVED FOR RELEASE: 06/14/2000 CIA-RDP86-00513R001033110003-9

MAYEVSKIY, Oleg Alekseyevich, kand.tekhn.nauk, dotsent

Single-phase rectifier with a diode current limiting circuit.
Izv.vys.ucheb.zav.; elektromekh. 5 no.9:1053-1056 '62.
(MIRA 16:1)

1. Kafedra elektrifikatsii promyshlennykh predpriyatiy Khar'kovskogo politekhnicheskogo instituta.
(Electric current rectifiers)

APPROVED FOR RELEASE: 06/14/2000 CIA-RDP86-00513R001033110003-9"

"APPROVED FOR RELEASE: 06/14/2000 CIA-RDP86-00513R001033110003-9

39026

S/105/62/000/006/001/002
E194/E455

9.2540

AUTHORS: Mayevskiy, O.A., Candidate of Technical Sciences, Dolbnya, V.T., Candidate of Technical Sciences

TITLE: The mechanical characteristics and special operating features of ionic drive with asymmetrical grid control

PERIODICAL: Elektrichestvo, no.6, 1962, 15-22

TEXT: Results are given of a theoretical and experimental study of the mechanical characteristics and special operating features of a d.c. drive supplied by a three-phase six-valve rectifier with asymmetrical grid control. The system may operate with either interrupted or uninterrupted motor current. The new method gives higher power-factor at low speeds than the usual types of ionic supply for d.c. drives; the range of operation over which interrupted current is employed is narrower. Thus, motor performance is improved in many respects. Schematic and equivalent circuits of the equipment are given and equations are derived for the mechanical characteristics of the motor in the interrupted current region. Unlike the normal case with symmetrical grid control, with asymmetrical control the rectified voltage and the

Card 1/4

APPROVED FOR RELEASE: 06/14/2000 CIA-RDP86-00513R001033110003-9"

"APPROVED FOR RELEASE: 06/14/2000 CIA-RDP86-00513R001033110003-9

39026
S/105/62/000/006/001/002
E194/E455

The mechanical characteristics ...

commutation voltage-drop depends on the rectifier ignition angle. Values of the principal variables are tabulated for the entire range of control. In the uninterrupted current range the external (speed/load) characteristic behaves similarly whether grid control is symmetrical or asymmetrical, but unlike the normal case, with asymmetrical control the slope of the speed/load characteristic depends on the degree of control. In the interrupted current range the shape of the mechanical characteristic depends very much on the load. Certain simplifying assumptions are made in order to analyse drive operation under interrupted current conditions and it is shown that in the system of relative units which is used the mechanical characteristics of the drive are expressed by the same function as are the rectifier external characteristics. The expressions for mean values of rectified current and voltage depend on the ignition angle. Expressions are derived for the principal variables in one of these ranges and they are given for the other ranges. The equations may be used to determine the boundaries of the interrupted-current region with asymmetrical control. Within

Card 2/4

APPROVED FOR RELEASE: 06/14/2000 CIA-RDP86-00513R001033110003-9"

"APPROVED FOR RELEASE: 06/14/2000 CIA-RDP86-00513R001033110003-9

this region there is a considerable rise in rectified voltage as the current is reduced. Formulae used in calculating the external characteristics are given in an appendix. Calculated motor performance curves are given and discussed. The theoretical conclusions were checked by practical tests on equipment consisting of two mercury-arc rectifiers type PM-200 (RM-200) supplying a d.c. motor of 15.5 kW, 440 V, 40 A, 700 rpm. Asymmetrical control was achieved by means of an electromagnetic commutator. The experimental results fully confirmed the theoretical analysis of ionic drive. As a result of the work, it is concluded that a rectifier with asymmetrical grid control can give a range of speed control at unusually high power-factor, particularly between 40 and 100% rated speed. The reactive power surge on starting the motor is only half that with an ionic drive controlled in the normal way. With asymmetrical control the load values requiring the use of interrupted current are only half those corresponding to symmetrical control. Therefore, smaller and cheaper smoothing chokes can be used. With the new circuit the inverse voltage on the valves is also halved, so that operating conditions are easier

APPROVED FOR RELEASE: 06/14/2000 CIA-RDP86-00513R001033110003-9"

"APPROVED FOR RELEASE: 06/14/2000 CIA-RDP86-00513R001033110003-9

39026

S/105/62/000/006/001/002

The mechanical characteristics ... E194/E455

and back-firing is less likely. There are 5 figures and 2 tables.

ASSOCIATION: Khar'kovskiy politekhnicheskiy institut imeni Lenina (Khar'kov Polytechnical Institute imeni Lenin)

SUBMITTED: February 7, 1962

Card 4/4

APPROVED FOR RELEASE: 06/14/2000 CIA-RDP86-00513R001033110003-9"

"APPROVED FOR RELEASE: 06/14/2000 CIA-RDP86-00513R001033110003-9

MAYEVSKIY, O.A., kand.tekhn.nauk, dotsent

Successive control of asymmetrical rectifier groups is an effective means for raising the power factor of converters with deep regulation. Izv. vys. ucheb. zav.; energ. 6 no.3:42-[illegible] Mr '63. (MIRA 16:5)

1. Khar'kovskiy politekhnicheskiy institut imeni V.I.Lenina. Predstavlena kafedroy elektrifikatsii promyshlennykh predpriyatiy.
(Electric current rectifiers) (Electric power distribution)

APPROVED FOR RELEASE: 06/14/2000 CIA-RDP86-00513R001033110003-9"

"APPROVED FOR RELEASE: 06/14/2000 CIA-RDP86-00513R001033110003-9

MAYEVSKIY, Oleg Alekseyevich, kand.tekhn.nauk, dotsent

Nonsymmetric bridge-type mercury-arc converters. Izv. vys. ucheb. zav.; elektromekh. 6 no.6:697-713 '63. (MIRA 16:9)

1. Kafedra elektrifikatsii promyshlennykh [illegible]priyatiy Khar'kovskogo politekhnicheskogo instituta.
(Electric current converters)

APPROVED FOR RELEASE: 06/14/2000 CIA-RDP86-00513R001033110003-9"

"APPROVED FOR RELEASE: 06/14/2000 CIA-RDP86-00513R001033110003-9

ACCESSION NR: AP4039562 S/0105/64/000/005/0041/0046

AUTHORS: Mayevskiy, O. A. (Candidate of technical sciences, Docent)

TITLE: Calculation of electromagnetic processes in rectifying devices with the aid of an intermediate function

SOURCE: Elektrichestvo, no. 5, 1964, 41-46

TOPIC TAGS: rectifier, rectifier electrical property, rectification, electric energy conversion

ABSTRACT: Since the customarily used piecewise-linear approximation of rectifier-circuit characteristics becomes inapplicable under intermittent or null-indication conditions, the author proposes a method for determining the phase angles at which rectifier operation begins and ends by means of a plot of an intermediate function. This intermediate function is obtained by transformation of the transcendental equations for the electromagnetic processes occurring

Card 1/3

APPROVED FOR RELEASE: 06/14/2000 CIA-RDP86-00513R001033110003-9"

"APPROVED FOR RELEASE: 06/14/2000 CIA-RDP86-00513R001033110003-9

ACCESSION NR: AP4039562

in the rectifier element to a symmetrical form, in which the conduction and extinction angles correspond to neighboring equal values of the intermediate function. Once these angles are determined, the rectifier currents and voltages can be easily calculated. The application of the method is illustrated with examples of a half-wave rectifier feeding an active-reactive load, a single-phase controlled rectifier with diode current-limiting circuit, and an m-phase converter intermittent operation. It is shown that plots of such intermediate functions make it possible not only to determine the extinction angles from the conduction angles, but also to outline the possible operating modes of rectifier converters. Orig. art. has: 8 figures and 33 formulas.

ASSOCIATION: Khar'kovskiy politekhnicheskiy institut im. V. I. Lenina (Khar'kov Polytechnic Institute)

Card 2/3

APPROVED FOR RELEASE: 06/14/2000 CIA-RDP86-00513R001033110003-9"

"APPROVED FOR RELEASE: 06/14/2000 CIA-RDP86-00513R001033110003-9

ACCESSION NR: AP4039562

SUBMITTED: 04Jun63 DATE ACQ: 01Jun64 ENCL: 00

SUB CODE: EE NR REF SOV: 005 OTHER: 000

Card 3/3

APPROVED FOR RELEASE: 06/14/2000 CIA-RDP86-00513R001033110003-9"

"APPROVED FOR RELEASE: 06/14/2000 CIA-RDP86-00513R001033110003-9

DOLBNYA, V.T., kand. tekhn. nauk; MAYEVSKIY, O.A., kand. tekhn. nauk

Study of an asymmetrically controlled converter in rectifying and inverting operations. Izv. vys. ucheb. zav.; energ. 8 no.1: 41-45 Ja '65. (MIRA 18:2)

1. Khar'kovskiy politekhnicheskiy institut imeni V.I. Lenina. Predstavlena kafedroy promyshlennoy elektroniki.

APPROVED FOR RELEASE: 06/14/2000 CIA-RDP86-00513R001033110003-9"

"APPROVED FOR RELEASE: 06/14/2000 CIA-RDP86-00513R001033110003-9

MAYEVSKIY, O.A., kand. tekhn. nauk

Determination of power relationships and vector power in the rectifiers of converter systems. Elektrichestvo no.3:7-14 Mr '65. (MIRA 18:6)

1. Khar'kovskiy politekhnicheskiy institut imeni Lenina.

APPROVED FOR RELEASE: 06/14/2000 CIA-RDP86-00513R001033110003-9"

"APPROVED FOR RELEASE: 06/14/2000 CIA-RDP86-00513R001033110003-9

MAYEVSKIY, O.A.; KOTLYAROV, O.P.

Device for measuring control, conduction, and commutation angles of rectifiers of converter units. Izv. vys. ucheb. zav.; prib. 8 no.5:37-43 '65. (MIRA 18:10)

1. Khar'kovskiy politekhnicheskiy institut imeni Lenina. Rekomendovana kafedroy elektrifikatsii promyshlennykh predpriyatiy.

APPROVED FOR RELEASE: 06/14/2000 CIA-RDP86-00513R001033110003-9"

"APPROVED FOR RELEASE: 06/14/2000 CIA-RDP86-00513R001033110003-9

MAYEVSKIY, [illegible], kand. tekhn. nauk, dotsent

Integral methods for determining power relationships in rectifier converters. Izv. vys. ucheb. zav.; energ. 8 no.8:43-51 Ag '65. (MIRA 18:9)

1. Khar'kovskiy politekhnicheskiy institut imeni V.I. Lenina. Predstavlena kafedroy promyshlennoy elektroniki.

APPROVED FOR RELEASE: 06/14/2000 CIA-RDP86-00513R001033110003-9"

"APPROVED FOR RELEASE: 06/14/2000 CIA-RDP86-00513R001033110003-9

ANDRUSENKO, P.I.; MAYEVSKIY, O.G. [Maiev's'kyi, O.H.], kand.tekhn.nauk; LINCHEVSKIY, V.V. [Lincheve's'kyi, V.V.], inzh.

KHTZ-UNDIMESG single-plunger fuel pumps. Mekh.sil'.hosp. 10 no.11:29-32 N '59. (MIRA 13:3)
(Fuel pumps)

APPROVED FOR RELEASE: 06/14/2000 CIA-RDP86-00513R001033110003-9"

"APPROVED FOR RELEASE: 06/14/2000 CIA-RDP86-00513R001033110003-9

MAYEVSKIY, O.G. [Maiev's'kyi, O.H.], kand. tekhn. nauk; DOLGANOV, K.Ye. [Dolhanov, K.IE.], inzh.-mekhanik

Checking the accuracy in assemblying KTZ-UMDIMESG single-plunger pumps. Mekh. sil'. hosp. 11 no.11:5-6 N '60. (MIRA 13:11)
(Fuel pumps)

APPROVED FOR RELEASE: 06/14/2000 CIA-RDP86-00513R001033110003-9"

"APPROVED FOR RELEASE: 06/14/2000 CIA-RDP86-00513R001033110003-9

MAYEVSKIY, O.G. [Maievs'kyi, O.H.], kand.tekhn.nauk; DOLGANOV, K.Ye. [Dolhanov, K.IE.], inzh.-mekhanik

Disassembly and assembly of single-plunger fuel pumps. Mekh. sil'. hosp. 12 no. 1:21-22 Ja '61. (MIRA 14:1)
(Fuel pumps)

APPROVED FOR RELEASE: 06/14/2000 CIA-RDP86-00513R001033110003-9"

"APPROVED FOR RELEASE: 06/14/2000 CIA-RDP86-00513R001033110003-9

MAYEVSKIY, O.G. [Maievs'kyi, O.H.], kand.tekhn.nauk; DOLGANOV, K.Ye. [Dolhanov, K.IE.], inzh.-mekhanik

How to test single plunger fuel pumps on motorless stands. Mekh. sil'. hosp. 12 no.9:12-14 S '61. (MIRA 14:11)
(Fuel pumps—Testing)

APPROVED FOR RELEASE: 06/14/2000 CIA-RDP86-00513R001033110003-9"

"APPROVED FOR RELEASE: 06/14/2000 CIA-RDP86-00513R001033110003-9

MAYEVSKIY, Petr Fedorovich; KHUNTSKARIYA, Ye.N., red.; KOZLOVSKAYA, M.D., tekhn. red.

[Autumnal plants of the central zone of the European part of the U.S.S.R.; classification key] Osenniaia flora srednei polosy Evropeiskoi chasti SSSR; opredelitel'. Izd.2. Moskva, Gos. uchebno-pedagog. izd-vo M-va prosv. RSFSR, 1961. 149 p. (MIRA 15:2)

(Botany--Classification)

APPROVED FOR RELEASE: 06/14/2000 CIA-RDP86-00513R001033110003-9"

"APPROVED FOR RELEASE: 06/14/2000 CIA-RDP86-00513R001033110003-9

MAYEVSKIY, Petr Felisovich; KHUNTSKARIYA, Ye.N., red.; KORNEYEVA, V.I., tekhn. red.

[Spring flora; a guide] Vesenniaia flora; opredelitel'. Izd.13. Moskva, Uchpedgiz, 1962. 103 p. (MIRA 16:4)
(Botany)

APPROVED FOR RELEASE: 06/14/2000 CIA-RDP86-00513R001033110003-9"

"APPROVED FOR RELEASE: 06/14/2000 CIA-RDP86-00513R001033110003-9

MAYEVSKIY, P. N.

USSR/Fuel - Gas, Natural Combustion, Flameless July 50

"Flameless Combustion of Natural Gas in Large Burners," V.A. Speysher, Cand Tech Sci. A. Ye. Kucheruck, P. N. Mayevskiy, V. M. Novikov, Engineers

"Elek Stants" No 7, pp 6-11

Describes experiments on various types of large burners leading to conclusion that it is possible to turn over to flameless heating in low-capacity steam boilers operating on gaseous fuel. Editor states further research will be necessary before use of flameless combustion leads to any radical reduction in size of boiler units. One of the experiments was made at L'vov hydroelectric power station under Prof M. B. Ravich.

PA 162T35

APPROVED FOR RELEASE: 06/14/2000 CIA-RDP86-00513R001033110003-9"

"APPROVED FOR RELEASE: 06/14/2000 CIA-RDP86-00513R001033110003-9

1. MAYEVSKIY, S.

2. USSR (600)

4. Moving-Picture Projection

7. Close cooperation with active members of the community guarantees successful work. Kinomekhanik. No.9, 1952

9. Monthly List of Russian Accessions, Library of Congress, January 1953. Unclassified.

APPROVED FOR RELEASE: 06/14/2000 CIA-RDP86-00513R001033110003-9"

"APPROVED FOR RELEASE: 06/14/2000 CIA-RDP86-00513R001033110003-9

MAYEVSKIY, Stanislav

Financing capital investments in the Polish People's Republic.
Fin. SSSR 22 no.11:65-71 N '61. (MIRA 14:11)
(Poland--Capital investments)

APPROVED FOR RELEASE: 06/14/2000 CIA-RDP86-00513R001033110003-9"

"APPROVED FOR RELEASE: 06/14/2000 CIA-RDP86-00513R001033110003-9

L 54590-65 EWT(d)/EWT(1)/EEC(m)/EEC(k)-2/EEC-4/EWA(h) Po-4/Pq-4/Pg-4/Pe1/
Pl-4/Pk-4/Pl-4 GS

ACCESSION NR: AT5009803 UR/0000/64/001/000/0087/0092

AUTHOR: Mayevskiy, S. M. (Kiev)

TITLE: Radio-frequency phase meter

SOURCE: Vsesoyuznaya konferentsiya po avtomaticheskomu kontrolyu i metodam elektricheskikh izmereniy. 4th, Novosibirsk, 1962. Avtomaticheskiy kontrol' i metody elektricheskikh izmereniy; trudy konferentsii, t. 1: Metody elektricheskikh izmereniy. Tsifrovyye izmerital'nyye pribory. Elementy izmeritel'nykh sistem (Automatic control and electrical measuring techniques; transactions of the conference, v. 1: Electrical measuring techniques. Digital measuring instruments. Elements of measurement systems). Novosibirsk, Redizdat Sib. otd. AN SSSR, 1964, 87-92

TOPIC TAGS: phase meter, rf phase meter

ABSTRACT: The development is reported of a direct-reading 0—360°, 10-100-Mc phase meter that comprises 27 units (counted in the block diagram). Input signals are applied to mixers connected to a common heterodyne AGC oscillator. The mixer output voltages are applied to an electronic switch controlled by a voltage

Card 1/2

APPROVED FOR RELEASE: 06/14/2000 CIA-RDP86-00513R001033110003-9"

"APPROVED FOR RELEASE: 06/14/2000 CIA-RDP86-00513R001033110003-9

L 54590-65

ACCESSION NR: AT5009803

from a square-pulse generator. The measurand is determined at an intermediate frequency and is turned into a voltage amplitude shown by the final electronic voltmeter. A block diagram, voltage shapes, and a vector diagram are explained. A laboratory model built according to the developed scheme is claimed to have shown an error of only $\pm 2^{\circ}$. Orig. art. has: 4 figures and 16 formulas.

ASSOCIATION: none

SUBMITTED: 25Sep64 ENCL: 00 SUB CODE: EC

NO REF SOV: 001 OTHER: 000

Card 2/2

APPROVED FOR RELEASE: 06/14/2000 CIA-RDP86-00513R001033110003-9"

"APPROVED FOR RELEASE: 06/14/2000 CIA-RDP86-00513R001033110003-9

ACCESSION NR: AP4043560 S/0146/64/007/004/0022/0027

AUTHOR: Mayevskiy, S. M.; Skripnik, Yu. A.

TITLE: Measuring the phase shift between two distorted voltages

SOURCE: IVUZ, Priborostroyeniye, v. 7, no. 4, 1964, 22-27

TOPIC TAGS: phase measurement, phase meter, rf phase measurement

ABSTRACT: Introducing filters into the channels of a conventional 2-channel phase meter considerably increases the error due to the inevitable frequency instability of the input voltages and the nonidentical frequency-phase characteristics of the filters. A new single-channel phase-measuring circuit is suggested which permits measuring the phase difference between the fundamental harmonics by isolating them in one filter; inaccuracy of the filter adjustment or frequency instability of the input voltages does not introduce additional errors. Both voltages are applied to the filter in alternation by a broadband 2-channel electronic switch,

Card 1/2

APPROVED FOR RELEASE: 06/14/2000 CIA-RDP86-00513R001033110003-9"

"APPROVED FOR RELEASE: 06/14/2000 CIA-RDP86-00513R001033110003-9

ACCESSION NR: AP4043560

whose frequency of operation is selected within 0.01--0.001 of the measurand frequency. Such a low switching frequency practically eliminates the effect of the transients associated with the phase jump at the moment of switching. The switching-frequency voltage at the output of the new phase meter measures the phase shift between the input voltages. As tests of a laboratory hookup showed, even a 30% third-harmonic content in one of the input voltages left the error under 0.2°, while the error of a conventional (F2-1) phase meter was ±5°. Orig. art. has: 2 figures and 19 formulas.

ASSOCIATION: Kiyevskiy politekhnicheskiy institut (Kiev Polytechnic Institute)

SUBMITTED: 01Jun63 ATD PRESS: 3078 ENCL: 00

SUB CODE: EC NO REF SOV: 004 OTHER: 000

Card 2/2

APPROVED FOR RELEASE: 06/14/2000 CIA-RDP86-00513R001033110003-9"

"APPROVED FOR RELEASE: 06/14/2000 CIA-RDP86-00513R001033110003-9

L 11432-67 EEC(k)-2/EWT(d)/EWT(1) GD

ACC NR: AT6023382 (N) SOURCE CODE: UR/0000/65/000/000/0067/0072

AUTHOR: Makiyevskiy, A. Ye. (Kiev); Mayevskiy, S. M. (Kiev)

ORG: none

TITLE: New circuits for high frequency digital electronic phasemeters

SOURCE: Vsesoyuznaya konferentsiya po avtomaticheskomu kontrolyu i metodam elektricheskikh izmereniy. 5th, Novosibirsk, 1963. Avtomaticheskiy kontrol' i metody elektricheskikh izmereniy; trudy konferentsii. t. I: Metody elektricheskikh izmereniy. Tsifrovyye izmeritel'nyye pribory. Elementy izmeritel'nykh sistem (Automatic control and electrical measuring techniques; transactions of the conference. v. 1: Electrical measuring techniques. Digital measuring instruments. Elements of measuring systems). Novosibirsk, Izd-vo Nauka, 1965, 67-72

TOPIC TAGS: phase meter, phase measurement, analog digital encoder

ABSTRACT: Two types of systems are described for measuring the phase difference between two voltages of equal frequency which is in the range between 10 and 100Mc. In the first system (Fig. 1) the angle to digit photoelectric encoder shaft is rotated until the shaft angle is equal to the measured phase difference satisfying the coincidence gate which causes the pulse counter input to be accessible to the source of pulses whose number is directly proportional to the measured phase difference. A minimum phase difference of 2° may be measured when the input voltages are between 0.1

Card 1/3

APPROVED FOR RELEASE: 06/14/2000 CIA-RDP86-00513R001033110003-9"

"APPROVED FOR RELEASE: 06/14/2000 CIA-RDP86-00513R001033110003-9

L 11432-67
ACC NR: AT6023382

and 10V. In the second system (Fig. 2) a similar encoder shaft is rotated until flip-flop is set into a state which allows the gate to be open for time duration proportional to the measured phase difference. During this time the reversible counter

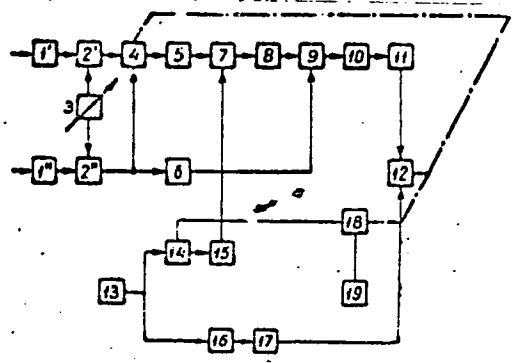

Fig. 1. Type 1 phasemeter

1'1" - capacitor attenuators; 2'2" - mixers; 3 - beat frequency oscillator; 4,18 - electronic switches; 5,6 - tuned amplifiers; 7,9 - mixers; 8,10 - filters; 11,17 - sharp edge pulse shapers; 12 - coincidence gate; 13 - voltage generator; 14 - shaft encoder; 15,16 - frequency dividers; 19 - pulse counter.

records a proportional number of pulses from the pulse generator. The minimum measurable phase difference by this circuit is 0.7—1°. In conclusion the authors propose a phasemeter which would have a single channel time shared by both input signals. This would eliminate the source of errors due to a

Card 2/3

APPROVED FOR RELEASE: 06/14/2000 CIA-RDP86-00513R001033110003-9"

"APPROVED FOR RELEASE: 06/14/2000 CIA-RDP86-00513R001033110003-9

L 11432-67
ACC NR: AT6023382

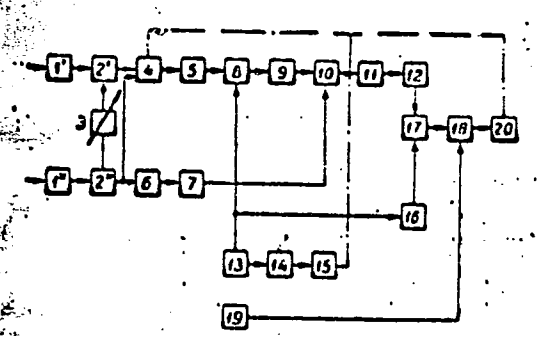

1'1" - capacitor attenuators; 2'2" - mixers; 3 - beat frequency oscillators; 4 - electronic switch; 5,9,11 - filters; 6 - tuned amplifier; 7 - shaft encoder; 8,10 - frequency doublers; 12,16 - amplifier-limiters; 13 - sine generator; 14 - frequency divider; 15 - control flip-flop; 17 - counter gating flip-flop; 18 - coincidence gate; 19 - pulse generator; 20 - reversible pulse counter.

Fig. 2. Type 2 phasemeter

small channel phase difference. Orig. art. has: 11 formulas and 3 figures.

SUB CODE: 09/ SUBM DATE: 20Sep65/ ORIG REF: 005

Card 3/3 bab

APPROVED FOR RELEASE: 06/14/2000 CIA-RDP86-00513R001033110003-9"

"APPROVED FOR RELEASE: 06/14/2000 CIA-RDP86-00513R001033110003-9

21(7), 24(5)

AUTHORS: Chou Kuang-chao, Mayevskiy, V. SOV/56-35-6-42/44

TITLE: The Universal Fermi Interaction and the Capture of a μ Meson in Hydrogen (Universal'noye vzaimodeystviye Fermi i zakhvat μ-mezona v vodorode)

PERIODICAL: Zhurnal eksperimental'noy i teoreticheskoy fiziki, 1958, Vol 35, Nr 6, pp 1581 - 1582 (USSR)

ABSTRACT: The investigation of the μ-capture and the verification of the idea of the universal (V-A) interaction [redacted] interest. The work in question presents expressions for the capture probability, the angular distribution, and the polarization of the neutrons flying off at the capture of a polarized negative muon by a proton under the assumption (according to Gell-Mann and Feynman) of a universal (V-A) interaction with maintenance of the vector flow. In the calculation, terms of the order $(v/c)^2$ were neglected, v representing the velocity of the neutron. The anomalous magnetic moment increases the total capture probability by ~ 17% and the coefficient of the angular correlation by 2.4 times.

Card 1/2

APPROVED FOR RELEASE: 06/14/2000 CIA-RDP86-00513R001033110003-9"

"APPROVED FOR RELEASE: 06/14/2000 CIA-RDP86-00513R001033110003-9

The Universal Fermi Interaction and the Capture of a μ Meson in Hydrogen SOV/56-35-6-42/44

The polarization of the neutrons varies only slightly as compared to the usual theory. In this case also the correction made necessary by the anomalous magnetic moment seems to be considerable. There are 7 references, 1 of which is Soviet.

ASSOCIATION: Ob"yedinennyy institut yadernykh issledovaniy (United Institute for Nuclear Research)

SUBMITTED: September 13, 1958

Card 2/2

APPROVED FOR RELEASE: 06/14/2000 CIA-RDP86-00513R001033110003-9"

"APPROVED FOR RELEASE: 06/14/2000 CIA-RDP86-00513R001033110003-9

MAYEVSKIY, V.

85400
C/026/59/015/007/004/006
F016/F001

~~21 (1)~~ 24.6900 (1138, 1191, 1559)

AUTHORS: Chou, Kuang-chao (周光召) and B. Matevfusky [Annotation: Correctly V. Mayevskiy]

TITLE: A Theory Concerning Universal Fermi Weak Interaction and the M-Mesonic Capture of Atomic Nuclei

PERIODICAL: Wu Li Hsueh Pao, 1959, Vol. 15, No. 7, pp. 377-388

ABSTRACT: The authors previously calculated the effect of B-magnetic moment on the M-meson capture process of protons. The results indicate that if Gellmann and Feynman's assumptions are in order, the effect of B-magnetic moment would be about 20%. Since the probability of M-meson capture by the proton is slight, the effect of B-magnetic moment is considered insignificant. This paper attempts to complete the previous plan. In order to obtain generalized results, the authors considered not only the effect of B-magnetic moment, but also the effects of "f" term.

Card 1/3

APPROVED FOR RELEASE: 06/14/2000 CIA-RDP86-00513R001033110003-9"

"APPROVED FOR RELEASE: 06/14/2000 CIA-RDP86-00513R001033110003-9

A Theory Concerning Universal Fermi Weak Interaction and the M-Mesonic Capture of Atomic Nuclei (Cont.)

85400
C/026/59/015/007/004/006
F016/F001

In the second section, they set forth formulae for the probability of M-meson capture by a nucleus as well as angular correlations between the neutron and the polarized M-meson, and others for neutron polarization. In the third section, general formulae for the probability of M-meson capture by the proton, and others for angular correlation and neutron polarization; plus the fourth section, the M-meson capture by the deutron is discussed. In the final section, the problem of M-meson capture by a more complicated nucleus is solved, wherein the model nucleus is considered the shell model for a single nucleon. In Appendix I, formulae for determining important transition phase matrices are listed. In Appendix II results for probability of M-meson capture by protons are cited. Polarization of neutrons are based on the assumption that matrix density in the initial state takes the following form:

$$\rho = \frac{1}{4}\left(1 + \vec{\sigma}_\mu \cdot \vec{P}_\mu + \vec{\sigma}_p \cdot \vec{P}_p + \zeta\, \vec{\sigma}_\mu \cdot \vec{\sigma}_p\right).$$

There are 18 sources, 7 are American, 7 Soviet, 2 English and 2 Italian.

Card 2/3

APPROVED FOR RELEASE: 06/14/2000 CIA-RDP86-00513R001033110003-9"

"APPROVED FOR RELEASE: 06/14/2000 CIA-RDP86-00513R001033110003-9

85400

A Theory Concerning Universal Fermi Weak Interaction and the 1-Mesonic Capture of Atomic Nuclei (Cont.)

C/026/59/015/007/004/006
F016/F001

ASSOCIATION: Lien Ho Yuan Tsu Yen Chiu So, (United Atomic Research Institute Moscow).

SUBMITTED: February 22, 1959

Card 3/3

APPROVED FOR RELEASE: 06/14/2000 CIA-RDP86-00513R001033110003-9"

"APPROVED FOR RELEASE: 06/14/2000 CIA-RDP86-00513R001033110003-9

1ST AND 2ND ORDERS

3RD AND 4TH ORDERS

PROCESSES AND PROPERTIES INDEX

CA

11D

Simultaneous action of white streptocide and some anesthetics on vegetative cells. V. E. Maryskii and O. I. Fetisova. *Farmakol. i Toksikol.* 7, No. 4, 39-41 (1944).

The effects of procaine (I), thiocaine (II), anesthesine (III), dicaine (IV), novocaine (V), and cocaine (VI) on growth inhibition by sulfanilamide (VII) in sprouting wheat were studied in Petri dishes, each contg. 25 seeds. Tests were made in parallel, with water contg. 0.1165 0.2% of anesthetic alone and with 0.005% VII. Control tests were of 2 kinds (no drug at all, and VII without anesthetic). The descending order of toxicity of the anesthetics was I, VI, II to V. Preferential inhibition of root growth was especially notable with V. Anesthetics derived from *p*-aminobenzoic acid, e. g., II, weakened the growth-inhibiting action of VII. V and VI intensified it. In an animal test a soln. contg. 0.5%, each of II and VII had the same anesthetic effect on rabbit-eye mucosa as did a soln. of 0.5% II, this indicated that II weakened the action of VII.

Julian F. Smith

ASM SLA METALLURGICAL LITERATURE CLASSIFICATION

APPROVED FOR RELEASE: 06/14/2000 CIA-RDP86-00513R001033110003-9"

"APPROVED FOR RELEASE: 06/14/2000 CIA-RDP86-00513R001033110003-9

CA

11H

The comparative action of Thermopsis dolichocarpa and T. lanceolata on the organism. V. E. Marvskii. *Farmakol. i Toksikol.* 8, No. 3, 49-50(1945). The emetic dose of liquid ext. of longleaf false lupine (*Thermopsis dolichocarpa*) leaves (I) is about twice that of *T. lanceolata* leaves (II), when given subcutaneously in dogs. Intravenous injections of I cause faster, deeper respiration, higher blood pressure and faster cardiac rhythm; II has similar but much more pronounced effects. I. F. S.

APPROVED FOR RELEASE: 06/14/2000 CIA-RDP86-00513R001033110003-9"

"APPROVED FOR RELEASE: 06/14/2000 CIA-RDP86-00513R001033110003-9

MAYEVSKIY, V.E., zaveduyushchiy.

Effect of cocaine and of other anesthetics upon the carotid sinus. Farm. i toks. 16 no.1:37-39 Mr-Ap '53. (MLRA 6:6)

1. Kafedra farmakologii Stalinabadskogo gosudarstvennogo meditsinskogo instituta. (Cocaine) (Anesthetics) (Carotid sinus)

APPROVED FOR RELEASE: 06/14/2000 CIA-RDP86-00513R001033110003-9"

"APPROVED FOR RELEASE: 06/14/2000 CIA-RDP86-00513R001033110003-9

MAYEVSKIY, V.E. (Stalino)

Development of adrenalin-induced auricular fibrillation during the action on the body of chlorine-containing substances: chloroform, ethyl chloride, and chloral hydrate [with summary in English]. Pat. fiziol. i eksp.terap. 2 no.6:26-29 N-D '58. (MIRA 12:1)

1. Iz kafedry farmakologii Stalinskogo gosudarstvennogo meditsinskogo instituta imeni A.M. Gor'kogo.

(EPINEPHRINE, eff.
auric. fibrill., eff. of chloroform, ethyl chloride & chloral hydrate on develop. in animals (Rus))
(AURICULAR FIBRILLATION, exper.
adrenalin induced, eff. of chloroform, ethyl chloride & chloral hydrate on develop. in animals (Rus))
(CHLOROFORM, eff.
on develop. of adrenalin induced auric. fibrill. in animals (Rus))
(ETHYL CHLORIDE, eff.
same)
(CHLORAL HYDRATE, eff.
same)

APPROVED FOR RELEASE: 06/14/2000 CIA-RDP86-00513R001033110003-9"

"APPROVED FOR RELEASE: 06/14/2000 CIA-RDP86-00513R001033110003-9

MAYEVSKIY, V.E., BERENSKIY, P.I.

Permeability of bromine into the cells of the central nervous system [with summary in English]. Farm. i toks. 21 no.4:58-59 Jl-Ag '56 (MIRA 11:11)

1. Kafedra farmakologii (zav. - V.E. Mayevskiy) Stalinskogo gosudarstvennogo meditsinskogo instituta imeni A.M. Gor'kogo

(BROMIDES, metabolism
potassium bromide in brain, tracer studies in dogs (Rus))
(BRAIN, metabolism
potassium bromide, tracer studies in dogs (Rus))

APPROVED FOR RELEASE: 06/14/2000 CIA-RDP86-00513R001033110003-9"

"APPROVED FOR RELEASE: 06/14/2000 CIA-RDP86-00513R001033110003-9

MAYEVSKIY, V.E.; BERENSKIY, P.I.

Influence of ganglion-blocking agents on excretion by the kidneys of radioactive bromine and iodine and on excretion. Urologiia no.6: 5-9 '60. (MIRA 15:5)

1. Iz kafedry farmakologii (zav. V.E. Mayevskiy) Stalinskogo meditsinskogo instituta imeni A.M. Gor'kogo.
(PENTAMINE) (BROMINE--ISOTOPES)
(IODINE--ISOTOPES) (URINE--SECRETION)

APPROVED FOR RELEASE: 06/14/2000 CIA-RDP86-00513R001033110003-9"

"APPROVED FOR RELEASE: 06/14/2000 CIA-RDP86-00513R001033110003-9

KALMYKOVA, Valentina Grigor'yevna; KOREPANOV, Yakov Alekseyevich; LEBEDEV, Aleksandr Aleksandrovich; MAYEVSKIY, Viktor Iosifovich; SHIROKOV, Boris Arkad'yevich; BOCHAROV, M.M., kand.geograf.nauk, red.

[Excursions for studying the nature of the native land; collection of articles] Ekskursii po izucheniiu prirody rodnogo kraia; sbornik statei. Pod red. M.M.Bocharova. Kalinin, Knizhnoe izd-vo, 1955. 164 p. (MIRA 12:10)

(Nature study)

APPROVED FOR RELEASE: 06/14/2000 CIA-RDP86-00513R001033110003-9"

"APPROVED FOR RELEASE: 06/14/2000 CIA-RDP86-00513R001033110003-9

15-1957-12-16985

Translation from: Referativnyy zhurnal, Geologiya, 1957, Nr 12, p 41 (USSR)

AUTHOR: Mayevskiy, V. I.

TITLE: Geological Structure and Geomorphology of Vyshnevolotskiy District (K voprosu o geologicheskom stroyenii i geomorfologii Vyshnevolotskogo rayona)

PERIODICAL: Uch. zap. Kalininsk. gos. ped. in-ta, 1956, vol 21, pp 153-378

ABSTRACT: Bibliographical entry

Card 1/1

APPROVED FOR RELEASE: 06/14/2000 CIA-RDP86-00513R001033110003-9"

"APPROVED FOR RELEASE: 06/14/2000 CIA-RDP86-00513R001033110003-9

MAYEVSKIY, V.I.

Development of hospitals and nurseries in the sixth five-year plan. Sov.zdrav. 16 no.8:7-14 Ag '57. (MLRA 10.10)

1. Nachal'nik otdela razvitiya narodnogo zdravookhraneniya Gosplana SSSR.

(CHILD WELFARE
day nurseries, statist. in Russia)
(HOSPITALS
statist. in Russia)

APPROVED FOR RELEASE: 06/14/2000 CIA-RDP86-00513R001033110003-9"

"APPROVED FOR RELEASE: 06/14/2000 CIA-RDP86-00513R001033110003-9

MAYEVSKIY, V.I.

Plan of development of the public health system in the R.S.F.S.R. for 1958. Sov.med. 22 no.5:121-125 My '58 (MIRA 11:7)
(PUBLIC HEALTH
in Russia (Rus))

APPROVED FOR RELEASE: 06/14/2000 CIA-RDP86-00513R001033110003-9"

"APPROVED FOR RELEASE: 06/14/2000 CIA-RDP86-00513R001033110003-9

MAYEVSKIY, V.I.

Development of medical literature in 1959-1965. Zdrav.Ros.Feder. 3 no.2:14-18 F '59. (MIRA 12:2)

1. Direktor Gosudarstvennogo izdatel'stva meditsinskoy literatury.
(MEDICINE)
(PUBLISHERS AND PUBLISHING)

APPROVED FOR RELEASE: 06/14/2000 CIA-RDP86-00513R001033110003-9"

"APPROVED FOR RELEASE: 06/14/2000 CIA-RDP86-00513R001033110003-9

MAYEVSKIY, V.I.

Boosk are friends. Zdorov'e 5 no.10:26-27 O '59. (MIRA 13:2)

1. Direktor Meditsinskogo gosudarstvennogo izdatel'stva.
(HEALTH EDUCATION)

APPROVED FOR RELEASE: 06/14/2000 CIA-RDP86-00513R001033110003-9"

"APPROVED FOR RELEASE: 06/14/2000 CIA-RDP86-00513R001033110003-9

MAYEVSKIY, V.I.

NESTEROV, A.I. (Moskva); TUSHINSKIY, M.D. (Leningrad); GOREV, N.N. (Kiyev); DOLGO-SABUROV, B.A. (Leningrad); ZAKUSOV, V.V. (Moskva); MUROMTSEV, S.N. (Moskva); CHUMAKOV, M.P. (Moskva); ZHDANOV, V.M., prof. (Moskva); NEGOVSKIY, V.A., prof. (Moskva); BIRYUKOV, D.A. (Leningrad); LITVINOV, N.N., prof. (Moskva); SOKOLOVA-PONOMAREVA, O.D. (Moskva); KUPALOV, P.S. (Leningrad); BATKIS, G.A. (Moskva); KOSYAKOV, P.N., prof. (Moskva); SHMELEV, N.A. (Moskva); BUSALOV, A.A., prof. (Moskva); MOLCHANOVA, O.P. (Moskva); STRASHUN, I.D.; BLOKHIN, N.N. (Moskva); PREOBRAZHENSKIY, B.S. (Moskva); VISHNEVSKIY, A.A. (Moskva) CHERNIGOVSKIY, V.N. (Moskva); PAVLOVSKIY, Ye.N., akademik (Leningrad); MYASNIKOV, A.L. (Moskva); VINOGRADOV, V.N. (Moskva); MAYEVSKIY, V.I.: DAVYDOVSKIY, I.V. (Moskva); IOFFE, V.I. (Moskva); KURASHOV, S.V.: ANOKHIN, P.K. (Moskva); BOGDANOV, I.D. (Kiyev); ZIL'BER, L.A. (Moskva); BRONOVITSKIY, A.Yu.; CHEBOTAREV, D.F., prof.

Debate on the address by Professor V.V.Parin, academician secretary of the Academy of Medical Sciences of the U.S.S.R.; abridged comments by members of the Academy of Medicine and the directors of institutes. Vest.AMN SSSR 14 no.8:19-31 '59. (MIRA 12:11)

1. Deystvitel'nyye chleny AMN SSSR (for Nesterov, Tushinskiy, Gorev, Zakusov, Kupalov, Strashun, Preobrazhenskiy, Vishnevskiy, Chernigovskiy, Myasnikov, Vinogradov, Anokhin, Zil'ber).

(Continued on next card)

APPROVED FOR RELEASE: 06/14/2000 CIA-RDP86-00513R001033110003-9"

"APPROVED FOR RELEASE: 06/14/2000 CIA-RDP86-00513R001033110003-9

NESTEROV, A.I.---(continued) Card 2.

2. Chleny-korrespondenty AMN SSSR (for Dolgo-Saburov, Chumakov, Zhdanov, Biryukov, Sokolova-Ponomareva, Batkis, Shmelev, Molchanova, Blokhin, Ioffe, Bogdanov). 3. Direktor Instituta gerontologii AMN SSSR (for Gorev). 4. Direktor Instituta farmakologii i khimioterapii AMN SSSR (for Zakusov). 5. Deystvitel'nyy chlen Vsesoyuznoy akademii sel'skokhozyaystvennykh nauk imeni V.I.Lenina (VASKhNIL); direktor Instituta epidemiologii i mikrobiologii imeni Gamalei AMN SSSR (for Muromtsev). 6. Direktor Instituta po izucheniyu poliomiyelita AMN SSSR (for Chumakov). 7. Direktor Instituta eksperimental'noy meditsiny AMN SSSR (for Biryukov). 8. Direktor Instituta obshchey i kommunal'noy gigiyeny AMN SSSR (for Litvinov). 9. Direktor Instituta pediatrii AMN SSSR (for Sokolova-Ponomareva). 10. Direktor Instituta virusologii AMN SSSR (for Kosyakov). 11. Direktor Instituta tuberkuleza AMN SSSR (Shmelev). 12. Direktor Instituta grudnoy khirurgii AMN SSSR (for Busalov). 13. Direktor Instituta pitaniya AMN SSSR (for Molchanova). 14. Direktor Instituta eksperimental'noy i klinicheskoy onkologii AMN SSSR (for Blokhin). 15. Direktor Instituta khirurgii AMN SSSR (for Vishnevskiy).

APPROVED FOR RELEASE: 06/14/2000 CIA-RDP86-00513R001033110003-9"

"APPROVED FOR RELEASE: 06/14/2000 CIA-RDP86-00513R001033110003-9

NESTEROV, A.I.--- (continued) Card 3.

16. Direktor Instituta fiziologii AMN SSSR (for Chernigovskiy). 17. Direktor Instituta terapii AMN SSSR (for Myasnikov). 18. Direktor Gosudarstvennogo izdatel'stva meditsinskoy literatury (for Mayevskiy). 19. Vitse-prezident AMN SSSR (for Davydovskiy). 20. Ministr zdravookhraneniya SSSR (for Kurashov). 21. Direktor Instituta infektsionnykh bolezney AMN SSSR (for Bogdanov). 22. Chlen-korrespondent AN BSSR: predsedatel' Uchenogo meditsinskogo soveta Ministerstva zdravookhraneniya BSSR (for Bronovitskiy). 23. Predsedatel' Uchenogo meditsinskogo soveta Ministerstva zdravookhraneniya USSR (for Chebotarev).

(MEDICINE)

APPROVED FOR RELEASE: 06/14/2000 CIA-RDP86-00513R001033110003-9"

"APPROVED FOR RELEASE: 06/14/2000 CIA-RDP86-00513R001033110003-9

MAYEVSKIY, V.I.

A subject plan for pbulications of the State Medical Publishing House in 1960. Vest. AMN SSSR 14 no.11:46-51 '59. (MIRA 13:3)
(LITERATURE)

APPROVED FOR RELEASE: 06/14/2000 CIA-RDP86-00513R001033110003-9"

"APPROVED FOR RELEASE: 06/14/2000 CIA-RDP86-00513R001033110003-9

MAYEVSKIY, V.I.

"Concern for the public health in Czechoslovakia" by J. Plojhar. Sov. zdrav. 18 no.2:50-51 '59. (MIRA 12:1)
(CZECHOSLOVAKIA--PUBLIC HEALTH)

APPROVED FOR RELEASE: 06/14/2000 CIA-RDP86-00513R001033110003-9"

"APPROVED FOR RELEASE: 06/14/2000 CIA-RDP86-00513R001033110003-9

BELETSKIY, G.N.; KONSTANTINOV, G.F.; MAYOROVA, Z.S.; MAYEVSKIY, V.I.; MAYSTRAKH, K.V.; ROSTOTSKIY, I.B. (Moskva).

Basis of Soviet socialistic public health. Sov. zdrav. 18 no.3: 22-28 '59. (MIRA 12:3)

(PUBLIC HEALTH
in Russia (Rus))

APPROVED FOR RELEASE: 06/14/2000 CIA-RDP86-00513R001033110003-9"

"APPROVED FOR RELEASE: 06/14/2000 CIA-RDP86-00513R001033110003-9

MAYEVSKIY, V.I. (Moskva)

History of Soviet medical publications. Sov.zdrav. 19 no.5:14-18 '60. (MIRA 13:9)

(MEDICAL LITERATURE)

APPROVED FOR RELEASE: 06/14/2000 CIA-RDP86-00513R001033110003-9"

"APPROVED FOR RELEASE: 06/14/2000 CIA-RDP86-00513R001033110003-9

MAYEVSKIY, V.I.

Journal for White Russian medical personnel; "Zdravookhranenie Belorussii", 1961, Nos. 1 - 12. Sov. zdrav. 21 no.5:83-85 '62. (MIRA 15:5)

(MEDICINE--PERIODICALS)

APPROVED FOR RELEASE: 06/14/2000 CIA-RDP86-00513R001033110003-9"

"APPROVED FOR RELEASE: 06/14/2000 CIA-RDP86-00513R001033110003-9

MAYEVSKIY, V.I. (Moskva)

Historical problems in medical journals; a survey of the first half of 1962. Sov.zdrav. 21 no.12:78-80 '62. (MIRA 15:12)
(MEDICINE)

APPROVED FOR RELEASE: 06/14/2000 CIA-RDP86-00513R001033110003-9"

"APPROVED FOR RELEASE: 06/14/2000 CIA-RDP86-00513R001033110003-9

MAYEVSKIY, V.I. (Moskva)

Deficiencies in publicizing advanced methods in the organization of public health service; review of medical journals for the first half of 1963. Sovet. zdravookhr. 12 no.1:44-49 [illegible]
(MIRA [illegible])

APPROVED FOR RELEASE: 06/14/2000 CIA-RDP86-00513R001033110003-9"

"APPROVED FOR RELEASE: 06/14/2000 CIA-RDP86-00513R001033110003-9

MAYEVSKIY, V.I.

Plans of the publishing agency "Meditsina" for 1964. Sov. med. 28 no.4:7-12 Ap '64 (MIRA 17:5)

APPROVED FOR RELEASE: 06/14/2000 CIA-RDP86-00513R001033110003-9"

"APPROVED FOR RELEASE: 06/14/2000 CIA-RDP86-00513R001033110003-9

MAYEVSKIY, V.I., inzhener.

Shop experience in pouring bearings, Zhel.dor.transp. 37 no.6: 77-78 Je '56. (MLRA 9:8)

(Bearings, (Machinery))

APPROVED FOR RELEASE: 06/14/2000 CIA-RDP86-00513R001033110003-9"

"APPROVED FOR RELEASE: 06/14/2000 CIA-RDP86-00513R001033110003-9

DVOSKINA, V.A., inzh. ; MAYEVSKIY, V.I., inzh.

Utilizing calcium babbitt metal with an aftercharge of aluminum.
Trudy TSNII MPS no.157:155-161 '58. (MIRA 11:11)
(Babbitt metal) (Aluminum alloys)

APPROVED FOR RELEASE: 06/14/2000 CIA-RDP86-00513R001033110003-9"

"APPROVED FOR RELEASE: 06/14/2000 CIA-RDP86-00513R001033110003-9

MAYEVSKIY, V.I., inzh.

Experience in using BSI babbit metal in locomotive systems.
Trudy TSNII MPS no.157:162-166 '58. (MIRA 11:11)
(Babbitt metal) (Bearings (Machinery)) (Locomotives)

APPROVED FOR RELEASE: 06/14/2000 CIA-RDP86-00513R001033110003-9"

"APPROVED FOR RELEASE: 06/14/2000 CIA-RDP86-00513R001033110003-9

MAYEVSKIY, V.I., inzh.

Protection against the overheating of axle bearings in the United States. Zhel.dor.transp. 42 no.1:88-92 Ja '60. (MIRA 13:5)

(United States--Railroads--Cars) (Car axles)

APPROVED FOR RELEASE: 06/14/2000 CIA-RDP86-00513R001033110003-9"

"APPROVED FOR RELEASE: 06/14/2000 CIA-RDP86-00513R001033110003-9

MAYEVSKIY, V.I., inzh.

Use of panels for modernization and repair of freight cars.
Zhel.dor.transp. 43 no.5:88-89 My '61. (MIRA 14:4)
(Railroads--Freight cars) (Paneling)

APPROVED FOR RELEASE: 06/14/2000 CIA-RDP86-00513R001033110003-9"

"APPROVED FOR RELEASE: 06/14/2000 CIA-RDP86-00513R001033110003-9

MAYEVSKIY, V.I., inzh.

Use of plastics in railroad transportation. Zhel.dor.transp. 43 no.6:45-48 Je '61. (MIRA 14:7)

1. Zamestitel' rukovoditelya otdeleniya polimerov Vsesoyuznogo nauchno-issledovatel'skogo instituta zheleznodorozhnogo transporta Ministerstva putey soobshcheniya.
(Railroads—Equipment and supplies) (Plastics)

APPROVED FOR RELEASE: 06/14/2000 CIA-RDP86-00513R001033110003-9"

"APPROVED FOR RELEASE: 06/14/2000 CIA-RDP86-00513R001033110003-9

MAYEVSKIY, V.I., inzh.

Experience in the use of axle equipment lubricants by the U.S.A. railroads. Zhel.dor.transp. 44 no.4:89-91 Ap '62. (MIRA 15:4)
(United States--Car axles--Lubrication)

APPROVED FOR RELEASE: 06/14/2000 CIA-RDP86-00513R001033110003-9"

"APPROVED FOR RELEASE: 06/14/2000 CIA-RDP86-00513R001033110003-9

MAYEVSKIY, V.I.

Use of rubber in the foreign railroad technology. Kauch. i rez. 22 no.5:36-42 My '63. (MIRA 16:7)

1. Vsesoyuznyy nauchno-issledovatel'skiy institut zheleznodorozhnogo transporta.
(Railroads—Equipment and supplies) (Rubber goods)

APPROVED FOR RELEASE: 06/14/2000 CIA-RDP86-00513R001033110003-9"

"APPROVED FOR RELEASE: 06/14/2000 CIA-RDP86-00513R001033110003-9

MAYEVSKIY, V.I., inzh.

Determining the efficiency of the use of polymers in railroad transportation. Zhel.-dor.transp. 45 no.12:16-18 D '63. (MIRA 17:2)

APPROVED FOR RELEASE: 06/14/2000 CIA-RDP86-00513R001033110003-9"

"APPROVED FOR RELEASE: 06/14/2000 CIA-RDP86-00513R001033110003-9

MAYEVSKIY, V.I., inzh.

Plastics in the friction units of the rolling stock of foreign railroads. Trudy TSNII MPS no.283:161-174 '64. (MIRA 18:4)

APPROVED FOR RELEASE: 06/14/2000 CIA-RDP86-00513R001033110003-9"

"APPROVED FOR RELEASE: 06/14/2000 CIA-RDP86-00513R001033110003-9

MAYEVSKIY, V.I., inzh.

Use of plastics for locomotive parts. Elek. i tepl.tiaga 6 no.8: 46-48 Ag '62. (MIRA 17:3)

APPROVED FOR RELEASE: 06/14/2000 CIA-RDP86-00513R001033110003-9"

"APPROVED FOR RELEASE: 06/14/2000 CIA-RDP86-00513R001033110003-9

SOV/51-5-2-13/26

AUTHORS: Lisitsa, M.P., Mayevskiy, V.M. and Tsvelykh, N.G.

TITLE: Thin-Layer Optics (Optika tonkogo sloya). III. Properties of Selenium (III. Svoystva selena)

PERIODICAL: Optika i Spektroskopiya, 1958, Vol 5, Nr 2, pp 179-183 (USSR)

ABSTRACT: The paper gives results of measurement of the reflection coefficients and the transmission coefficient of selenium layers of various thicknesses. These layers were prepared by sublimation as described in Ref 1. Standard methods of measurement of the coefficients of reflection on the air side (R) and on the base side (R') and the transmission coefficient (T) were employed (see Ref 2). The authors used wedge-shaped plates with 1.52 refractive index for the sample supports. The coefficient R, R' and T were measured only for layers produced using a symmetrical evaporation source, but in the study of variation of the phase-shift δ a spherical evaporation source was used. The method of determination of δ was described in Ref 3. The errors in measurement of T reached 5% and those in measurement of R and R' were sometimes in excess of 10%. All measurements were made immediately after preparation of the layer, at four separate wavelengths in the visible region: 540, 595, 620 and 700 mμ. Calculations of n and K

Card 1/3

APPROVED FOR RELEASE: 06/14/2000 CIA-RDP86-00513R001033110003-9"

"APPROVED FOR RELEASE: 06/14/2000 CIA-RDP86-00513R001033110003-9

SOV/51-5-2-13/26

Thin-Layer Optics. III Properties of Selenium

(the refractive index and the absorption coefficient respectively, were made using Abeles' method described in Ref 4, except that the layer thickness d was measured independently (Ref 3). The results obtained may be divided into two groups. The first group includes δ, R, R', T and absorption $A = 1 - R - T$. All these parameters were obtained by direct measurements and they are subject to experimental errors only. The second group includes n and K, which were calculated using theoretical considerations, and therefore their values are affected by the approximations of the theory used. The results are given in Figs 1-6. In all figures, except Fig 5, the four wavelengths: 540, 595, 620 and 700 mμ are represented by curves marked 1, 2, 3 and 4 respectively. Figs 1 and 2 give the dependences of R and R' on the layer thickness d respectively. Figs 3 and 4 give the values of T and A as functions of d. Fig 5 gives the phase-shift δ as a function of the layer thickness d for one wavelength (546 mμ). The results obtained lead to the following conclusions. (A) The optical properties of selenium layers vary with thickness in a wide range of thicknesses. (B) In the range of

Card 2/3

APPROVED FOR RELEASE: 06/14/2000 CIA-RDP86-00513R001033110003-9"

"APPROVED FOR RELEASE: 06/14/2000 CIA-RDP86-00513R001033110003-9

thickness studied here (up to 1000 Å) the coefficients R and R' behaved similarly. This indicates that there are considerable differences in the topography of the selenium layers at the boundaries air--layer and layer--glass. (C) The phase-shift d depends on the form of the evaporation source used to prepare the selenium layers studied. The shape of this source affects the form and dimensions of the grains of which the layer is made. (D) The interaction of light with selenium layers near 160 Å in thickness is of resonance nature. There are 6 figures and 7 references, 3 of which are Soviet, 2 French, 1 German and 1 English.

ASSOCIATION: Kiyevskiy gosudarstvennyy universitet (Kiyev State University)

SUBMITTED: September 25, 1957

Card 3/3 1. Selenium films--Optical properties 2. Mathematics--Applications

APPROVED FOR RELEASE: 06/14/2000 CIA-RDP86-00513R001033110003-9"

"APPROVED FOR RELEASE: 06/14/2000 CIA-RDP86-00513R001033110003-9

S/058/62/000/005/056/119
A057/A101

AUTHORS: Lisitsa, M. P., Mayevskiy, V. M., Tsvelykh, N. G.

TITLE: Optical properties of thin films of some semiconductors

PERIODICAL: Referativnyy zhurnal, Fizika, no. 5, 1962, 6, abstract 5G46 (V sb. "Fotoelektr. i optich. yavleniya v poluprovodnikakh", Kiyev, AN USSR, 1959, 227-232)

TEXT: Quantitative data are presented on investigations of optical properties of Se and Te. Results are given on the investigation of phase shifts, which arise when light is reflected from the interface air-layer of Ag and Ge.

[Abstracter's note: Complete translation]

Card 1/1

APPROVED FOR RELEASE: 06/14/2000 CIA-RDP86-00513R001033110003-9"

"APPROVED FOR RELEASE: 06/14/2000 CIA-RDP86-00513R001033110003-9

05455
SOV/120-59-3-26/46

AUTHORS: Lisitsa, M. P., and Mayevskiy, V. M.

TITLE: A Semi-empirical Method of Measuring Thicknesses Along a Wedge-Shaped Layer (Poluempiricheskiy metod opredeleniya tolshchin vdol' klinoobraznogo tonkogo sloya)

PERIODICAL: Pribory i tekhnika eksperimenta, 1959, Nr 3, pp 113-118 (USSR)

ABSTRACT: The first part of the paper presents a rather inconclusive theory of deposition from an evaporator (Fig 1 and Eqs (1) - (12')); the results from this theory, which give the thickness C as a function of the angle α, have to be checked by some independent method in the first instance. The equations from (11") to (14) deal with one way of checking the results; thicknesses d_1 and d_2 are measured at two different points. The equations down to (17) introduce corrections for non-sphericity of the source. The next section deals with cylindrical sources rather briefly. Fig 2 shows d and C(l) (curves 1 and 2 respectively) for selenium. Fig 3 gives results for two layers of selenium deposited from a

Card 1/2

APPROVED FOR RELEASE: 06/14/2000 CIA-RDP86-00513R001033110003-9"

"APPROVED FOR RELEASE: 06/14/2000 CIA-RDP86-00513R001033110003-9

05455
SOV/120-59-3-28/46

A Semi-empirical Method of Measuring Thicknesses Along a Wedge-Shaped Layer

semi-cylindrical evaporator; in each case theory and experiment agree well. There are 3 figures and 4 references 3 of which are Soviet and 1 English.

ASSOCIATION: Kiyevskiy gosudarstvennyy universitet (Kiyev State University)

SUBMITTED: March 10, 1958

Card 2/2

APPROVED FOR RELEASE: 06/14/2000 CIA-RDP86-00513R001033110003-9"

"APPROVED FOR RELEASE: 06/14/2000 CIA-RDP86-00513R001033110003-9

DEYGEN, M. F.; ZEVIN, V. Ya.; MAYEVSKIY, V. M.; ROYTSIN, A. B.

"Some problems of paramagnetic resonance of local centers on semiconductors."

report submitted for Intl Conf on Physics of Semiconductors, Paris, 19-24 Jul 64.

APPROVED FOR RELEASE: 06/14/2000 CIA-RDP86-00513R001033110003-9"

"APPROVED FOR RELEASE: 06/14/2000 CIA-RDP86-00513R001033110003-9

DEYGEN, M.F.; MAYEVSKIY, V.M.; ZEVIN, V.Ya.; VITRIKHOVSKIY, N.I.

Electron paramagnetic resonance of Mn^{2+} ions in CdS. Fiz. tver. tela 6 no.9:2756-2761 S '64.

(MIRA 17:11)

1. Institut poluprovodnikov AN SSSR, Kiyev.

APPROVED FOR RELEASE: 06/14/2000 CIA-RDP86-00513R001033110003-9"

"APPROVED FOR RELEASE: 06/14/2000 CIA-RDP86-00513R001033110003-9

MATEVSKIY, V.K., inzh.

Important reserve for economizing on non-ferrous metals. Elek. i tepl. tiaga 2 no.10:4-6 O '58. (MIRA 11:11)
(Railroads--Equipment and supplies) (Nonferrous metals)

APPROVED FOR RELEASE: 06/14/2000 CIA-RDP86-00513R001033110003-9"

"APPROVED FOR RELEASE: 06/14/2000 CIA-RDP86-00513R001033110003-9

TOMUSHEV, Maks Moyseyevich; SOROKIN, A.A., inzh., retsenzent; MAYEVSKIY, V.V., retsenzent; YEREMITSKIY, M.G., inzh., otv. red.; CHISTYAKOVA, L.G., inzh., red.; GORNOSTAYPOL'SKAYA, M.S., tekhn. red.

[Design of a motor vehicle]Ustroistvo avtomobilia. Moskva, Mashgiz, 1962. 383 p. (MIRA 16:3)
(Motor vehicles--Design and construction)

APPROVED FOR RELEASE: 06/14/2000 CIA-RDP86-00513R001033110003-9"

"APPROVED FOR RELEASE: 06/14/2000 CIA-RDP86-00513R001033110003-9

MAYEVSKIY, V. Ya.

"Experiences in Operating Petroleum Bases" page 67 in the book Petroleum Bases and Pipe Lines, Gostoptekhizdat, 1956

APPROVED FOR RELEASE: 06/14/2000 CIA-RDP86-00513R001033110003-9"

"APPROVED FOR RELEASE: 06/14/2000 CIA-RDP86-00513R001033110003-9

MAYEVSKIY, V.Ya., inzhener; BOTVIN, F.Ya., inzhener.

Centralized delivery of petroleum products. Neftianik 1 no.1:25-27 Ja '56. (MIRA 9:7)

1.Ukrneftesbyta.
(Petroleum--Transportation)

APPROVED FOR RELEASE: 06/14/2000 CIA-RDP86-00513R001033110003-9"

"APPROVED FOR RELEASE: 06/14/2000 CIA-RDP86-00513R001033110003-9

MAYEVSKIY, V.Ya.; TVERSKOY, I.Sh.

Problems of new technology in petroleum storage. Neftianik 1 no.10:17-18 O '56. (MLRA 9:11)

1. Glavnyy inzhener Ukrneftesbyta (for Mayevskiy). 2. Nachal'nik proyektno-smetnogo byuro Ukrneftesbyta (for Tverskoy).

(Petroleum--Storage)

APPROVED FOR RELEASE: 06/14/2000 CIA-RDP86-00513R001033110003-9"

"APPROVED FOR RELEASE: 06/14/2000 CIA-RDP86-00513R001033110003-9

MAYEVSKIY, V.Ya.; TVERSKOY, I.Sh.

Mechanized loading of barrels. Neftianik 2 no.9:24-25 S '57. (MLRA 10:9)

1. Glavnyy inzhener Ukrneftesbyta (for Mayevskiy). 2. Nachal'nik proyektno-smetnogo byuro Ukrneftesbyta (for Tverskoy).
(Barrel. Loading and unloading)

APPROVED FOR RELEASE: 06/14/2000 CIA-RDP86-00513R001033110003-9"

"APPROVED FOR RELEASE: 06/14/2000 CIA-RDP86-00513R001033110003-9

MAYEVSKIY, V.Ya.; TVERSKOY, I.Sh.

Assembly of floating roofs in existing tanks. Neftianik 3 no.4:28-29 Ap '58. (MIRA 11:5)

1. Glavnyy inzhener Ukrneftesbyta (for Mayevskiy). 2. Nachal'nik PSB Ukrneftesbyta (for Tverskoy).
(Tanks)

APPROVED FOR RELEASE: 06/14/2000 CIA-RDP86-00513R001033110003-9"

"APPROVED FOR RELEASE: 06/14/2000 CIA-RDP86-00513R001033110003-9

14(10) SOV/92-58-10-10/30

AUTHORS: Mayevskiy, V. Ya. and Tverskoy, I. Sh., Staff Members of the Ukrglavneftesbyt

TITLE: A Floating Roof Preserves the Petroleum Product Quality (Plavayushchaya krysha sokhranyayet kachestvo nefteprodukta)

PERIODICAL: Neftyanik, 1958, Nr 10, pp 17-18 (USSR)

ABSTRACT: According to this article a floating roof of a storage tank can limit losses of light fractions of the petroleum product stored in the tank, and consequently can preserve its quality. For this reason Ukrainian bulk plants started to use storage tanks with floating roofs long ago. The roof of such a tank is built of prefabricated sections, assembled at the storage site, and is provided with peripheral, annular sectional pontoons and a central pontoon. A special cover plate (Fig. 1) connects the various pontoon sections. The column of the tank runs through the central pontoon. The most important part in the structure is the roof closure (Fig. 2) consisting of two belts covered with rubber and a polyvenyl chloride film inserted between them. A clearance of

Card 1/2

APPROVED FOR RELEASE: 06/14/2000 CIA-RDP86-00513R001033110003-9"

"APPROVED FOR RELEASE: 06/14/2000 CIA-RDP86-00513R001033110003-9

A Floating Roof Preserves the Petroleum (Cont.) SOV/92-58-10-10/30

60-112 mm is left between the tank shell and the peripheral pontoon, and one of 130-132 mm between the tank column and the central pontoon. The closure at the center consists of two semi-circular sections (Fig. 3). There are 3 figures.

ASSOCIATION: Ukrglavneftesbyt

Card 2/2

APPROVED FOR RELEASE: 06/14/2000 CIA-RDP86-00513R001033110003-9"

"APPROVED FOR RELEASE: 06/14/2000 CIA-RDP86-00513R001033110003-9

MAYEVSKIY V. YA.

MATSKIN, L.A.; KOVALENKO, K.I.; BABUKOV, V.G.; KONSTANTINOV, N.N.; PONOMAREV, G.V.; FAL'CHIKOV, G.N.; PELENICHKO, L.G.; SHAMARDIN, V.M.; GLADKOV, A.A.; BRILLIANT, S.G.; SHEVCHUK, V.Ya.; SOSHCHEN-KO, Ye.M.; ALEKSANDROV, A.M.; BUNCHUK, V.A.; KRUPENIK, P.I.; MAYEVSKIY, V.Ya.; YELSHIN, K.V.; GAK, Kh.A.; POTAPOV, G.M.; KARDASH, I.M.; STEPURO, S.I.; KAPLAN, S.A.; SELIVANOV, T.I.; YEREMENKO, N.Ya.; ZHUZH, A.D.; USTINOV, A.A.; GIRKIN, G.M.; VOLOBUYEV, P.P.; CHERNYAK, I.L., nauchnyy red.; DESHALYT, M.G., vedushchiy red.; GENNAD'YEVA, I.M., tekhn.red.

[Combating losses of petroleum and petroleum products; materials of the All-Union Conference on Means of Combating Losses of Petroleum and Petroleum Products] Bor'ba s poteriami nefti i nefteproduktov; po materialam Vsesoiuznogo soveshchaniia po bor'be s poteriami nefti i nefteproduktov. Leningrad, Gos.nauchno-tekhn. izd-vo neft. i gorno-toplivnoi lit-ry, 1959. 157 p. (MIRA 13:2)

1. Nauchno-tekhnicheskoye obshchestvo neftyanoy i gazovoy promyshlennosti.
(Petroleum industry)

APPROVED FOR RELEASE: 06/14/2000 CIA-RDP86-00513R001033110003-9"

"APPROVED FOR RELEASE: 06/14/2000 CIA-RDP86-00513R001033110003-9

MAYEVSKIY, G. YA.

25(1) PHASE I BOOK EXPLOITATION SOV/3421

Akademiya nauk URSR, Kiyev, Institut elektrosvarki imeni akademika Ye.O. Patona

Vnedreniye novykh sposobov svarki v promyshlennost', vyp. 2 (Introduction of New Welding Methods in Industry; Collection of Articles, No. 2) Kiyev, Gos. izd-vo tekhn. lit-ry Ukrainskoy SSR, 1959. 198 p. Errata slip inserted. 3,000 copies printed.

Ed.: V. Chartusha; Tech. Ed.: S. Matusevich.

PURPOSE: This book is intended for workers in the welding industry.

COVERAGE: The book contains a discussion of welding techniques and problems by groups of scientists and welders. Much attention is given to problems in the application of new methods of mechanized welding and electro-slag welding. This is the second collection of articles under the same title prepared and published by the Institut elektrosvarki imeni Ye.O. Patona (Institute of Electric Welding imeni Ye.O. Paton). The preface is written by B.Ye. Paton, Academician of the Ukrainian Academy of Sciences and Winner of the Lenin Prize. There are no references.

Iskra, A. S. [Engineer], Yu. A. Starenhogna [Candidate of Technical Sciences], V. M. Khrundzhe [Engineer; Institut elektrosvarki imeni Ye.O. Patona (Electric Welding Institute imeni Ye.O. Paton)], D. P. Antonzis [Engineer, Zhdanovskiy zavod imeni Il'icha (Plant imeni Il'ich in Zhdanov), V. I. Rabinovich [Engineer; Barnaul'skiy kotel'nyy zavod (Barnaul Boiler Plant)], and V. V. Chernykh [Engineer; Novo-Kramatorskiy mashinostroitel'nyy zavod (New Kramatorsk Machinery Plant)]. Electro-slag Welding of Steel-plate Constructions 17

Iskra, A. S. [Senior Engineer], A. M. Makara [Candidate of Technical Sciences], and L. V. Novikov [Senior Engineer; Institut elektrosvarki imeni Ye. O. Patona (Electric Welding Institute imeni Ye. O. Paton)]. Making Bodies for Chemical Equipment by Electro-slag Welding of Medium-alloyed Steel Forgings 32

Medover, R. I. [Candidate of Technical Sciences], A. N. Safonnikov [Engineer; Institut elektrosvarki imeni Ye. O. Patona (Electric Welding Institute imeni Ye. O. Paton)], and I. N. Gerasimenko [Head of Welding Department; Podol'skiy mashinostroitel'nyy zavod imeni S. O. Ordzhonikidze (Podol'sk Machinery Plant imeni S. O. Ordzhonikidze)]. Electro-slag Welding of Large Flanges of 1Kh18N9T Austenitic Steel 51

Gurevich, S. M. [Candidate of Technical Sciences], V. P. Dzikovskiy [Engineer; S. D. Zagrebenyuk [Engineer; Institut elektrosvarki imeni Ye. O. Patona (Electric Welding Institute imeni Ye. O. Paton)], P. S. Simpol'skiy [Head of Welding Office], and V. P. Shayvyr [Technologist of a welding shop]. Electro-slag Automatic Arc Welding of Medium and Large Thickness of Titanium 64

Pokhodaya, I. K. [Candidate of Technical Sciences], V. P. Subbotovskiy [Senior Engineer], I. I. Frumin [Candidate of Technical Sciences; Institut elektrosvarki imeni Ye. O. Patona (Electric Welding Institute imeni Ye. O. Paton)], L. A. Volkova, [Shop Foreman; Dnepropetrovskiy metallurgicheskiy zavod imeni G. I. Petrovskogo (Dnepropetrovsk Metallurgical Plant imeni G. I. Petrovskiy)], V. P. Gorelov [Shop Superintendent; Alchevskiy metallurgicheskiy zavod imeni K. Ye. Voroshilova (Alchevsk Metallurgical Plant imeni K. Ye. Voroshilov)], and N. A. Kyrbenko, [Chief Mechanic, Magnitogorskiy metallurgicheskiy kombinat (Magnitogorsk Metallurgical Combine)]. Introduction of Automatic Hard-surfacing in the Metallurgical Industry 74

Lashkerich, R. L., [Candidate of Technical Sciences], S. L. Mandel'berg [Candidate of Technical Sciences; Institut elektrosvarki imeni Ye. O. Patona (Electric Welding Institut imeni Ye. O. Paton)] Z. O. Kuyshinskiy [Candidate of Technical Sciences; Ukrainskiy nauchno-issledovatel'skiy trubnyy institut (Ukrainian Scientific and Research Institute of Pipes)], and S. A. Frikke [Chief Engineer; Chelyabinskiy trubo-prokatnyy zavod (Chelyabinsk Pipe-rolling Plant)]. New Technique in Straight-seam Welding of Large-diameter Oil and Gas Pipes 95

Corbunov, O. V. [Engineer; Institut elektrosvarki imeni Ye. O. Patona (Electric Welding Institute imeni Ye O. Paton). F. A. Lazko, [Chief Engineer; Svarochno-montazhnyy trest (Welding and Assembling Trust)], and A. N. Turyshev [Chief of the Department of Gas Pipeline Construction; Glavgaz SSSR (Main Administration of the Gas Industry of the USSR)]. Mechanized Methods of Welding in Pipeline Construction 108

Mayevskiy, G. Y. [Candidate of Technical Sciences, Winner of Lenin Prize; Institut elektrosvarki imeni Ye. O. Patona (Electric Welding Institute imeni Ye. O. Paton)], V. Ya. Mayevskiy [Chief Engineer; Ukrglavneftesbyt (Ukrainian Main Administration for Petroleum Marketing)], and Ye. F. Martinson [Head of Construction and Assembly Administration No. 70; Trust 7, Ministerstvo stroitel'stva RSFSR (RSFSR Ministry of Construction, Trust 7)]. Introduction of the Method for Welding in the Petroleum Industry 118

APPROVED FOR RELEASE: 06/14/2000 CIA-RDP86-00513R001033110003-9"