"APPROVED FOR RELEASE: 06/20/2000 CIA-RDP86-00513R001033420003-5

MEL'NICHENKO, Daniil Yefimovich, kand. tekhn. nauk; GORELKINA, A.V., kand. tekhn. nauk, red.; KOSOVSKIY, V.A., red.; LAPCHENKO, Ye.P., tekhn. red.

[New vacuum spillway dams] Novye vakuumnye vodoslivnye plotiny. Kiev, Izd-vo Ukrainskoi Akad. sel'khoz. nauk, 1961. 117 p. (MIRA 14:8)

(Dams)

APPROVED FOR RELEASE: 06/20/2000 CIA-RDP86-00513R001033420003-5"

"APPROVED FOR RELEASE: 06/20/2000 CIA-RDP86-00513R001033420003-5

DMITRIYEV, Yu.L., inzh.; LYASHCHENKO, G.D., inzh.; MEL'NICHENKO, D.Ye., kand. tekhn.nauk

Introduction of the new USKhA No.4 profile of a siphon spillway. Gidr.stroi. 31 no.4:23-26 Ap '61. (MIRA 14:5)
(Ukraine—Spillways)

APPROVED FOR RELEASE: 06/20/2000 CIA-RDP86-00513R001033420003-5"

"APPROVED FOR RELEASE: 06/20/2000 CIA-RDP86-00513R001033420003-5

PISKORSKIY, Georgiy Avgustovich; SIVCHENKO, Nina Andreyevna; CHEREDNICHENKO, Ya.F., inzh., retsenzent; MEL'NICHENKO, D.Ye., kand. tekhn. nauk, dots., red.; RIKBERG, D.B., red.; GORNOSTAYPOL'SKAYA, M.S., tekhn. red.

[Hydraulic and pneumatic devices of machinery in light industry; design and construction] Gidravlicheskie i pnevmaticheskie ustroistva mashin legkoi promyshlennosti; konstruktsiia i raschet. Moskva, Mashgiz, 1962. 212 p. (MIRA 15:6)

(Machinery—Hydraulic driving)
(Machinery—Pneumatic driving)

APPROVED FOR RELEASE: 06/20/2000 CIA-RDP86-00513R001033420003-5"

"APPROVED FOR RELEASE: 06/20/2000 CIA-RDP86-00513R001033420003-5

SHOGAM, S.M.; YEFIMENKO, I.A.; NIKIFOROVA, N.M.; MEL'NICHENKO, E.L.

Chromatographic analysis of heptachlor. Zhur.anal.khim. 17 no.2:260-262 Mr-Ap '62. (MIRA 15:4)

1. Nauchnyy institut po udobreniyam i insektofungisidam imeni Ya.V. Samoylova, Moskva.
(Heptachlor) (Chromatographic analysis)

APPROVED FOR RELEASE: 06/20/2000 CIA-RDP86-00513R001033420003-5"

"APPROVED FOR RELEASE: 06/20/2000 CIA-RDP86-00513R001033420003-5

KVACHEV, G.S., inzh.; MEL'NICHENKO, G.I., inzh.

Modernized flow regulators for hydroelectric power plants.
Mekh.i elek.sots.sel'khoz. 17 no.6:40-43 '59. (MIRA 13:4)

1. Ukrgiprosel'elektro.
(Hydroelectric power stations)

APPROVED FOR RELEASE: 06/20/2000 CIA-RDP86-00513R001033420003-5"

"APPROVED FOR RELEASE: 06/20/2000 CIA-RDP86-00513R001033420003-5

KVACHEV, G.S., kand.tekhn.nauk; MEL'NIKHENKO, G.I.; STASENKO, R.F.

A new drive for 10 kv. oil-filled switches. Energ.i elektrotekh. prom. no.4:45-48 O-D '62. (MIRA 16:2)

1. Ukrnigiprosel'elektro.
(Electric switchgear) (Electric power distribution)

APPROVED FOR RELEASE: 06/20/2000 CIA-RDP86-00513R001033420003-5"

"APPROVED FOR RELEASE: 06/20/2000 CIA-RDP86-00513R001033420003-5

KOMAROV, D.T., inzh.; MEL'NICHENKO, G.I. [Mel'nychenko, H.I.], inzh.

Automatic control of diesel electric power stations. Mekh. sil'. hosp. 13 no.4:27-28 Ap '62. (MIRA 17:3)

APPROVED FOR RELEASE: 06/20/2000 CIA-RDP86-00513R001033420003-5"

"APPROVED FOR RELEASE: 06/20/2000 CIA-RDP86-00513R001033420003-5

MEL'NICHENKO, G.I., inzh.; SANTOTSKIY, V.G., inzh.; GEYDERMAN, Zh.P., inzh.; SHISHKOV, I.M., inzh.

Automation of the hydroelectric power stations of the Bukovskiy Regional Power System for parallel operation with its power system. Energ. i elektrotekh. prom. no.3:7-10 Jl-S '64.

(MIRA 17:11)

APPROVED FOR RELEASE: 06/20/2000 CIA-RDP86-00513R001033420003-5"

"APPROVED FOR RELEASE: 06/20/2000 CIA-RDP86-00513R001033420003-5

BEBKO, V.G., inzh.; MEL'NICHENKO, G.I., inzh.; FEL'DMAN, N.M., inzh.

Protection of 10 kv. rural electric power distribution lines from single-phase short-circuits to ground using a search method. Energ. i elektrotekh. prom. no.3:10-11 Jl-S '64.

(MIRA 17:11)

APPROVED FOR RELEASE: 06/20/2000 CIA-RDP86-00513R001033420003-5"

"APPROVED FOR RELEASE: 06/20/2000 CIA-RDP86-00513R001033420003-5

MEL'NICHENKO, G.I., inzh.; STAR-ENKO, R.F., inzh.

PTM-2 drives for oil-filled switches. Energ. i elektrotekh. prom. no.4:38 O-D '64. (MIRA 18:3)

APPROVED FOR RELEASE: 06/20/2000 CIA-RDP86-00513R001033420003-5"

"APPROVED FOR RELEASE: 06/20/2000 CIA-RDP86-00513R001033420003-5

BERLIZOV, P.V., inzh.; MEL'NICHENKO, G.I., inzh.

Network for the automatic control of a transformer substation without disconnecting switches in outgoing 10 kv. lines (rural electrical systems). Energ. i elektrotekh. prom. no.4:37-38 O-D '64. (MIRA 18:3)

APPROVED FOR RELEASE: 06/20/2000 CIA-RDP86-00513R001033420003-5"

"APPROVED FOR RELEASE: 06/20/2000 CIA-RDP86-00513R001033420003-5

TYLKIN, M. A.; ZASPITSKIY, N. A.; MEL'NICHENKO, G. P.

Investigating temperature conditions of the service of charging bars. Izv.vys.ucheb.zav.; chern.met.7 no. 5:184-189 '64. (MIRA 17:5)

1. Dneprodzerzhinskiy metallurgicheskiy zavod-vtuz i Metallurgicheskiy zavod im. Dzerzhinskogo.

APPROVED FOR RELEASE: 06/20/2000 CIA-RDP86-00513R001033420003-5"

"APPROVED FOR RELEASE: 06/20/2000 CIA-RDP86-00513R001033420003-5

TYLKIN, M.A.; ZASPITSKIY, N.A.; MEL'NICHENKO, G.P.

Investigating the heat resistance of charging bars in service conditions. Izv. vys. ucheb. zav.; chern. met. 7 no.9:155-159'64. (MIRA 17:6)

1. Dneprodzerzhinskiy metallurgicheskiy zavod-vtuz i Metallurgicheskiy zavod im. Dzerzhinskogo.

APPROVED FOR RELEASE: 06/20/2000 CIA-RDP86-00513R001033420003-5"

"APPROVED FOR RELEASE: 06/20/2000 CIA-RDP86-00513R001033420003-5

TYLKIN, M.A.; MEL'NICHENKO, G.P.; ZASPITSKIY, N.A.; KHUDENKO, M.A.; YUZVA, A.B.

Investigating service temperature conditions and the heat resistance of rolls on transverse-spiral rolling mills. Izv. vys. ucheb. zav.; chern. met. 7 no.11:124-130 '64. (MIRA 17:12)

1. Dneprodzerzhinskiy metallurgicheskiy zavod-vtuz i Dneprovskiy metallurgicheskiy zavod.

APPROVED FOR RELEASE: 06/20/2000 CIA-RDP86-00513R001033420003-5"

"APPROVED FOR RELEASE: 06/20/2000 CIA-RDP86-00513R001033420003-5

TYLKIN, M.A., kand. tekhn. nauk, dotsent; GREBENIK, V.M., kand. tekhn. nauk, dotsent; MEL'NICHENKO, G.P., inzh.; ZASPITSKIY, N.A., inzh.; KORDABNEV, I.L., inzh.

Temperature changes in the cup of a large blast furnace cell. Stal' 24 no.5:408-411 My '64. (MIRA 17:12)

1. Dneprodzerzhinskiy metallurgicheskiy zavod-vtuz, Dnepropetrovskiy metallurgicheskiy institut i Dneprovskiy metallurgicheskiy zavod im. Dzerzhinskogo.

APPROVED FOR RELEASE: 06/20/2000 CIA-RDP86-00513R001033420003-5"

"APPROVED FOR RELEASE: 06/20/2000 CIA-RDP86-00513R001033420003-5

TYLKIN, M.A., dotsent, kand. tekhn. nauk; MEL'NICHENKO, G.P., inzh.; ZASPITSKIY, N.A., inzh.

Temperature conditions of operation, heat resistance, and wear resistance of rolls on three-high sheet rolling mills. Stal' 24 no.10:906-909 O '64. (MIRA 17:12)

1. Dneprodzerzhinskiy metallurgicheskiy zavod-vtuz i zavod im. Dzerzhinskogo.

APPROVED FOR RELEASE: 06/20/2000 CIA-RDP86-00513R001033420003-5"

"APPROVED FOR RELEASE: 06/20/2000 CIA-RDP86-00513R001033420003-5

TYLKIN, M.A.; MEL'NICHENKO, G.P.; ZASPITSKIY, N.A.

Service temperature conditions and thermal resistance of hot trim saw disks. Izv. vys. ucheb. zav.; chern. met. 8 no.2: 183-187 '65. (MIRA 18:2)

1. Dneprodzerzhinskiy metallurgicheskiy zavod-vtuz i Metallurgicheskiy zavod im. Dzerzhinskogo.

APPROVED FOR RELEASE: 06/20/2000 CIA-RDP86-00513R001033420003-5"

"APPROVED FOR RELEASE: 06/20/2000 CIA-RDP86-00513R001033420003-5

TYLKIN, M.A., kand. tekhn. nauk; MEL'NICHENKO, G.P., inzh.; KORDABNEV I.L., inzh.; ZASPITSKIY, N.A., inzh.; GREBENIK, V.M., kand. tekhn. nauk; SYSUYEV, Yu.A., kand. tekhn. nauk; SVETOZAROV, A.V., inzh.

Temperature of the double-walled bell in the charging equipment. Stal' 25 no.12:1079-1080 D '65. (MIRA 18:12)

APPROVED FOR RELEASE: 06/20/2000 CIA-RDP86-00513R001033420003-5"

"APPROVED FOR RELEASE: 06/20/2000 CIA-RDP86-00513R001033420003-5

MEL'NICHENKO, G.T., inzh.

Passenger ship superstructures made of light alloys. Sudostroenie 26 no.12:5-9 D '60. (MIRA 13:11)
(Hulls (Naval architecture))
(Aluminum-magnesium alloys)

APPROVED FOR RELEASE: 06/20/2000 CIA-RDP86-00513R001033420003-5"

"APPROVED FOR RELEASE: 06/20/2000 CIA-RDP86-00513R001033420003-5

MEL'NICHENKO, G.T., inzh.

Windbreaker devices on ships. Sudostroenie 29 no.7:9-14 Jl '63. (MIRA 16:9)

(Naval architecture)

APPROVED FOR RELEASE: 06/20/2000 CIA-RDP86-00513R001033420003-5"

"APPROVED FOR RELEASE: 06/20/2000 CIA-RDP86-00513R001033420003-5

MEL'NICHENKO, G.T., inzh.

Conference on shipbuilding in Varna. Sudostroenie 30 no.9:69-70 S '64. (MIRA 17:11)

1. Rukovoditel' delegatsii Nauchno-tekhnicheskogo obshchestva sudostroitel'noy promyshlennosti imeni akademika Krylova.

APPROVED FOR RELEASE: 06/20/2000 CIA-RDP86-00513R001033420003-5"

"APPROVED FOR RELEASE: 06/20/2000 CIA-RDP86-00513R001033420003-5

L 09990-67 EWP(k)/EWT(d)/EWT(m)/EWP(w)/EWP(v)/EWP(t)/ETI LIP(c) EM/JD/WW

ACC NR: AP6029810 (N) SOURCE CODE: UR/0229/66/000/007/0054/0057

AUTHOR: Mol'nichenko, G. T.

ORG: none

TITLE: On units of passage of frame beams through hull structures

SOURCE: Sudostroyeniye, no. 7, 1966, 54-57

TOPIC TAGS: marine engineering, shipbuilding, engineering, structural engineering, ship

ABSTRACT: Some new techniques for ship hull framing are presented. Attention is given to the problem of joining hull stiffeners with sheet and plate construction. Some of the earlier types of joints had undesirable features conducive to fatigue failures due to unfavorable stress concentrations. Essentially these stresses are caused by poor selection of the locations of welds joining the stiffener with the hull or other plates and by poor selection of the shapes of the notches and filler plugs at the joint. Some basic changes in slot shapes are recommended. These changes allow the joining of plates to angles, channels, and T-beams with greater ease by increasing the fit tolerance. The configuration of the recommended joints

UDC: 629.12.001.2

Card 1/2

APPROVED FOR RELEASE: 06/20/2000 CIA-RDP86-00513R001033420003-5"

"APPROVED FOR RELEASE: 06/20/2000 CIA-RDP86-00513R001033420003-5

L 09990-67

ACC NR: AP6029810

Fig. 1. Slots and plugs for passage of a strip-bulb member: a - old construction; b - recommended.

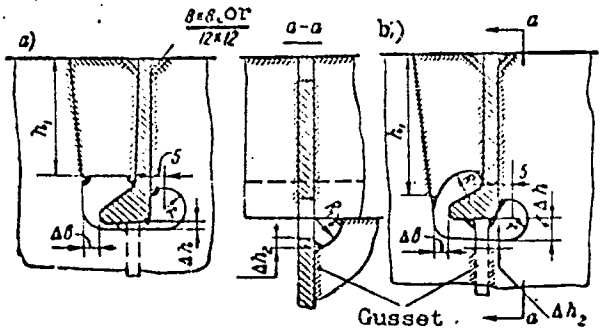

also permits a more equitable distribution of contact forces and hence eliminates many causes of fatigue cracking at this type of joint. An example of the recommended joint configuration is shown in Fig. 1, where the old method of joining a strip-bulb member with a plate is contrasted with the new method. The author gives some recommendations pertaining to selection of the dimensions of welds, slots, plug shapes, etc. Orig. art. has: 10 figures.

SUB CODE: 13/ SUBM DATE: none

Card 2/2

APPROVED FOR RELEASE: 06/20/2000 CIA-RDP86-00513R001033420003-5"

"APPROVED FOR RELEASE: 06/20/2000 CIA-RDP86-00513R001033420003-5

MEL'NICHENKO, G.V.

MEL'NICHENKO, G.V., kand.med.nauk

Adipose tissue as a part of the physiological system of connective tissue. Medych.zhur. 18 no.1:78-89 '48. (MIRA 10:12)

1. Z viddilu patologichnoi anatomii (zav. viddilu - chl.-korr. AN URSR O.I.Smirnova-Zamkova) Institutu klinichnoi fiziologii im. akad. O.O. Bogomol'tsya AN URSR.
(ADIPOSE TISSUES) (CONNECTIVE TISSUES)

APPROVED FOR RELEASE: 06/20/2000 CIA-RDP86-00513R001033420003-5"

"APPROVED FOR RELEASE: 06/20/2000 CIA-RDP86-00513R001033420003-5

MEL'NICHENKO, G.V., st.nauk.spivr.

[redacted] tuberculin on argyrophil ground substance. Medych.zhur. 20 no.3:39-45 '50. (MIRA 11:1)

1. Z viddilu patologichnoi anatomii (zaviduvach - chlen-korespondent AN URSR profesor O.I.Smirnova-Zamkova) Institutu klinichnoi fiziologii im. akad. O.O.Bogomol'tsya AN URSR (direktor - chlen-korespondent AN URSR prof. P.Ye.Kavets'kiy)
(TUBERCULIN) (CONNECTIVE TISSUE)

APPROVED FOR RELEASE: 06/20/2000 CIA-RDP86-00513R001033420003-5"

"APPROVED FOR RELEASE: 06/20/2000 CIA-RDP86-00513R001033420003-5

1. MEL'NICHENKO, G. V.

2. USSR (600)

4. Penicillin

7. Effect of penicillin upon the formation of thrombi. Medych. zhur. 21 No. 5, 1951.

9. Monthly List of Russian Accessions, Library of Congress, April 1953, Uncl.

APPROVED FOR RELEASE: 06/20/2000 CIA-RDP86-00513R001033420003-5"

"APPROVED FOR RELEASE: 06/20/2000 CIA-RDP86-00513R001033420003-5

MEL'NICHENKO, G. V.

MEL'NICHENKO, G.V.

Changes in argyrophil ground substance in experimental tuberculosis. Medych.zhur. 22 no.3:63-74 '52. (MIRA 11:2)

1. Institut klinichnoi fiziologii im. akad. O.O.Bogomol'tsya AN URSR.
(CONNECTIVE TISSUE) (TUBERCULOSIS)

APPROVED FOR RELEASE: 06/20/2000 CIA-RDP86-00513R001033420003-5"

"APPROVED FOR RELEASE: 06/20/2000 CIA-RDP86-00513R001033420003-5

SMIRNOVA-ZAMKOVA, O.I.; MEL'NICHENKO, G.V.

Data on morphological changes following ionizing irradiation of the animal organism. Medych.zhur.24 no.5:26-37 '54. (MLRA 8:10)

1. Institut fiziologii im. O.O. Bogomol'tsya Akademii nauk URSR, laboratoriya morfologii.
(RADIATIONS, effects, ionizing, histol.aspects)

APPROVED FOR RELEASE: 06/20/2000 CIA-RDP86-00513R001033420003-5"

"APPROVED FOR RELEASE: 06/20/2000 CIA-RDP86-00513R001033420003-5

MEL'NICHENKO, G.V.

Dynamics of cellular reactions and changes in the basic argyrophil substance in tuberculosis. Fiziol.zhur. [Ukr.] 2 no.6:106-114 N-D '56. (MLRA 10:2)

1. Institut fiziologii imeni O.O.Bogomol'tsya Akademii nauk URSR, laboratoriya morfologii.
(TUBERCULOSIS) (PATHOLOGY, CELLULAR)

APPROVED FOR RELEASE: 06/20/2000 CIA-RDP86-00513R001033420003-5"

"APPROVED FOR RELEASE: 06/20/2000 CIA-RDP86-00513R001033420003-5

MEL'NICHENKO, G.V. [Mel'nychenko, H.V.]; MEL'NICHENKO, V.D. [Mel'nychenko, V.D.]

Development of the theory concerning the basic argyrophil substance in the works of Academician O. I. Smyrnova-Zamkova of the Academy of Sciences of the Ukrainian S.S.R. Fiziol zhur. [Ukr.] 9 no.4:520-525 Jl-Ag '64. (MIRA 17:10)

1. Institut fiziologii im. Bogomol'tsa AN UkrSSR i Ukrainskiy nauchno-issledovatel'skiy institut klinicheskoy meditsiny im. Strazhesko, Kiyev.

APPROVED FOR RELEASE: 06/20/2000 CIA-RDP86-00513R001033420003-5"

"APPROVED FOR RELEASE: 06/20/2000 CIA-RDP86-00513R001033420003-5

SHAKHPER, P.; MEL'NICHENKO, I.

Plaster which requires no smoothing. Stroitel' no.9:2[illegible], 4 of cover S '61. (MIRA 14:12)

1. Zamestitel' direktora Kemerovskogo filiala Gosudarstvennogo instituta po vnedreniyu peredovykh metodov raboty i truda v stroitel'stve Nauchno-issledovatel'skogo instituta organizatsii, mekhanizatsii i tekhnicheskoy pomoshchi stroitel'stvu Akademii stroitel'stva i arkhitektury SSSR (for Shakhper). 2. Starshiy instruktor Kemerovskogo filiala Gosudarstvennogo instituta po vnedreniyu peredovykh metodov raboty i truda v stroitel'stve Nauchno-issledovatel'skogo instituta organizatsii, mekhanizatsii i tekhnicheskoy pomoshchi stroitel'stvu Akademii stroitel'stva i arkhitektury SSSR (for Mel'nichenko).
(Plastering)

APPROVED FOR RELEASE: 06/20/2000 CIA-RDP86-00513R001033420003-5"

"APPROVED FOR RELEASE: 06/20/2000 CIA-RDP86-00513R001033420003-5

[illegible], [illegible], mekhanik; [illegible], [illegible]; AKSYUK, L.I., inzh.

[illegible] Letters. Bezop. truda v prom. 5 no.[illegible]33 O '6[illegible].
(MIRA [illegible])

1. Uchastok No.[illegible] "Cherkasskaya-Severnaya" No.2 (for Mel'nichenko). 2. [illegible]-issledovatel'skiy gornorudnyy [illegible], g. Krivoy Rog (for Aksyuk).
(Industrial safety)

APPROVED FOR RELEASE: 06/20/2000 CIA-RDP86-00513R001033420003-5"

"APPROVED FOR RELEASE: 06/20/2000 CIA-RDP86-00513R001033420003-5

L 20601-66 EWT(m)/EWP(w)/EWA(d)/T/EWP(t)/EWP(k) JD/HW
ACC NR: AP6010136 SOURCE CODE: UR/0133/66/000/003/0248/0250

AUTHOR: Rudoy, V. S. (Candidate of technical sciences); Alferova, N. S. (Doctor of technical sciences); Mlinarich, B. A. (Engineer); Bogdanova, T. M. (Engineer); Sadokov, G. M. (Engineer); Mel'nichenko, I. F. (Engineer); Kirvalidze, N. S. (Engineer); Kurilenko, V. Kh. (Engineer); Onishchenko, M. P. (Engineer)

ORG: none

TITLE: Production of tubes from OKh20N5T stainless steel

SOURCE: Stal', no. 3, 1966, 248-250

TOPIC TAGS: stainless steel, low nickel steel, stainless steel tube, tube rolling, hot rolling / Okh20N5T steel, EP299 steel

ABSTRACT: Technological properties of EP299 (OKh20N5T) stainless steel and the conditions for tube rolling this steel have been studied. The steel, annealed at 1050C for 15 min and air cooled, has a tensile strength of 101 kg/mm^2, a yield strength of 34 kg/mm^2, an elongation of 40.6%, and a reduction of area of 62.1%. Corresponding figures for test temperature at 350C are 52 kg/mm^2, 39.0% and 69.7%. The steel is very sensitive to the cooling rate: slow cooling sharply reduces the elongation and impact strength. The plasticity of EP299 steel does not change in the 1100—1250C range, but increases sharply with further increases in temperature and rapidly increasing content of α-phase. Up to 1250C the plasticity of EP299 steel is much

Card 1/2 UDC: 621.744.35

APPROVED FOR RELEASE: 06/20/2000 CIA-RDP86-00513R001033420003-5"

"APPROVED FOR RELEASE: 06/20/2000 CIA-RDP86-00513R001033420003-5

L 20601-66
ACC NR: AP6010136

lower, but at 1275C and over much higher, than that of Kh18N10T and EI-811 steels. The hot working of EP299 steel must be done at temperatures over 1250C. The steel, however, has a tendency to stick to guide bars. With guide bars made from G18 steel (1.4—1.8% C, 16—19% Mn) and piercing done at 1275—1300C, the tendency to stick was greatly reduced. The mechanical properties and surface quality of hot-rolled and heat-treated EP299 tubes were satisfactory, and the tubes were suitable for cold rolling and cold drawing. Orig. art. has: 2 figures. [AZ]

SUB CODE: 11, 13/ SUBM DATE: none/ ORIG REF: 003/ ATD PRESS: 4125

Card 2/2

APPROVED FOR RELEASE: 06/20/2000 CIA-RDP86-00513R001033420003-5"

"APPROVED FOR RELEASE: 06/20/2000 CIA-RDP86-00513R001033420003-5

L 20422-66

ACC NR: AT6006229 SOURCE CODE: UR/0000/65/000/000/0341/0353

AUTHOR: Mel'nichenko, I. K.

ORG: None

25
B+1

TITLE: Optical mechanical scanning devices with flexible drive and some problems concerning the analysis of their accuracy

SOURCE: AN SSSR. Institut avtomatiki i telemekhaniki. Tekhnicheskaya kibernetika (Technical cybernetics). Moscow, Izd-vo Nauka, 1965, 341-353

TOPIC TAGS: optic scanning, optic instrument, optic mechanical scanner

ABSTRACT: The author investigates the optical mechanical device shown in Fig. 1 designated for scanning along a spiral trajectory. It has a flexible element which is simultaneously a wave converter of basic rotation velocity and an elastic hinge joint which provides a connection between the spaced and the synchronously rotating components. The casing 1 contains the stator 2 of the synchronous motor; the bearings 6 support the hollow rotor 3. An elastic element 4 is fastened to the tube 5. Its central and sufficiently rigid part is held by the bearings 15 which keep it on the axis of 3. The other end of 4 holds the thin-walled indented ring 12 which may be deformed by 9 and may assume an

APPROVED FOR RELEASE: 06/20/2000 CIA-RDP86-00513R001033420003-5"

"APPROVED FOR RELEASE: 06/20/2000 CIA-RDP86-00513R001033420003-5

L 20428-66

ACC NR: AT6006229

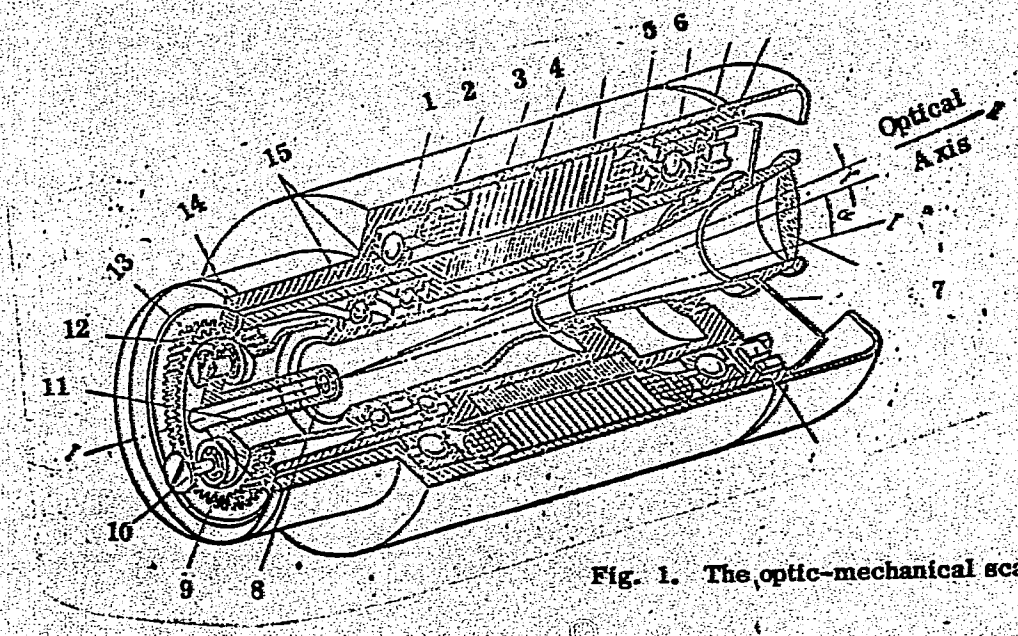

Fig. 1. The optic-mechanical scanner

Card 2/3

APPROVED FOR RELEASE: 06/20/2000 CIA-RDP86-00513R001033420003-5"

"APPROVED FOR RELEASE: 06/20/2000 CIA-RDP86-00513R001033420003-5

L 20428-66

ACC NR: AT6006229

elliptical shape, bringing it in contact with 13. The axes 10 holding 9 are fixed to the stationary section of the casing 14. The sensor 8 is within the fixed part 11 of the elastic element 4. The lens is 7. The author presents the basic operating principle of the device, describes its actual operation, discusses the systematic and random errors, and shows a block diagram of the scanner with a correction unit and a universal stand for the tuning of the correcting block. Orig. art. has: 35 formulas and 9 figures. [08]

SUB CODE: 17/ SUBM DATE: 05Nov65/ ORIG REF: 003/ ATD PRESS: 4222

Card 3/3 OLR

APPROVED FOR RELEASE: 06/20/2000 CIA-RDP86-00513R001033420003-5"

"APPROVED FOR RELEASE: 06/20/2000 CIA-RDP86-00513R001033420003-5

L 47561-66 EWT(d)/EWT(1) IJP(c)

ACC NR: AP6032412 SOURCE CODE: UR/0021/66/000/009/1125/1127

AUTHOR: Mel'nychenko, I. P. Mel'nichenko, I. P.; Pavlyuk, I. A.

ORG: Kiev State University (Kyyivs'kyy derzhavnyy universytet)

35

B

TITLE: On a variational problem on the dynamics of a body of variable mass

SOURCE: AN UkrRSR. Dopovidi, no. 9, 1966, 1125-1127

TOPIC TAGS: flight dynamics, variable mass ~~body~~ system, variational method, Cauchy problem, flight mechanics

ABSTRACT: The variational problem of the motion of a body of variable mass described by the equation

$$m(t)\frac{dv}{dt} + A_0 v^2 + c\frac{dm}{dt} + m(t)g = 0, \quad (1)$$

where m(t) is the variable mass of the body, v is its velocity, c is the relative constant exhaust velocity, and g and A_0 are the gravitational and drag constants, respectively, is analyzed. This variational problem is formulated as follows: from all possible functions m(t), we are to choose that one which maximizes the performance functional

$$x(t) - x_0 = \int_{t_0}^{t_k} v(t)\,dt. \quad (2)$$

Card 1/2

APPROVED FOR RELEASE: 06/20/2000 CIA-RDP86-00513R001033420003-5"

"APPROVED FOR RELEASE: 06/20/2000 CIA-RDP86-00513R001033420003-5

L 47561-66

ACC NR: AP6032412

To solve this problem, the asymptotic methods of the theory of differential equations are applied. By various substitutions, equation (1) is reduced to the canonical form

$$z'' + f(t)z = 0, \qquad (3)$$

where $f(t) < 0$ for $t \geq t_0$ and $\int_{t_0}^{\infty} |f'(t)|\,dt < \infty$.

The solution of the Cauchy problem for equation (3) with the initial condition

$$v(t_0) = v_0 \qquad (4)$$

is sought. The fundamental system of solutions of equation (5) is derived in asymptotic form, and finally, the approximate general solution $v(t_1\ t_0)$ is presented in analytic form which at $t \to \infty$ becomes an expression that does not depend on the initial conditions. Therefore, the variational problem (2) is reduced to determining the maximum of a functional whose explicit form is known. The problem of determining the law of variation for $m(t)$ is considerably simplified because this law must be established in a certain class of functions with one unknown parameter. Orig. art. has: 10 formulas. [LK]

SUB CODE: 01/ SUBM DATE: 26Aug65/ ORIG REF: 002/ ATD PRESS: 5095

Card 2/2

APPROVED FOR RELEASE: 06/20/2000 CIA-RDP86-00513R001033420003-5"

"APPROVED FOR RELEASE: 06/20/2000 CIA-RDP86-00513R001033420003-5

ACC NR: AR6020059 SOURCE CODE: UR/0124/66/000/001/A008/A008

AUTHOR: Mel'nichenko, I. P.

TITLE: The connection between problems of exterior and interior ballistics in the dynamics of a variable mass body

SOURCE: Ref. zh. Mekhanika, Abs. 1A49

REF SOURCE: Sb. Dinamika sistem tverdykh i zhidkikh tel, Kiyev, 1965, 64-69

TOPIC TAGS: exterior ballistics, interior ballistics, variable mass system

TRANSLATION: The problem of constructing a closed system of equations to describe the motion of variable mass bodies is studied. Considering the system as closed, Meshcherskiy's equation is obtained as a consequence of the law of conservation of motion. The laws of conservation of mass and energy for the system remain auxiliary to Meshcherskiy's equation, and this makes it possible to exclude the absolute velocity of the particles lost from the body. The determination of the relative velocity of particle loss in the case of stationary as well as nonstationary flow is reduced formally to an interior ballistics problem. 6 references.

SUB CODE: 20,22

Card 1/1

APPROVED FOR RELEASE: 06/20/2000 CIA-RDP86-00513R001033420003-5"

"APPROVED FOR RELEASE: 06/20/2000 CIA-RDP86-00513R001033420003-5

MEL'NICHENKO, I.V.; SHILOV, Ye.A.; YASNIKOV, A.A.

Catalytic action of amino acids and amines. Part 11: Kinetics of enolization of acetone in the presence of amino acids of various structure. Ukr. khim. zhur. 30 no.6:599-608 '64. (MIRA 18:5)

1. Institut organicheskoy khimii AN UkrSSR.

APPROVED FOR RELEASE: 06/20/2000 CIA-RDP86-00513R001033420003-5"

"APPROVED FOR RELEASE: 06/20/2000 CIA-RDP86-00513R001033420003-5

MEL'NICHENKO, I.V.; YASNIKOV, A.A.

Catalytic action of amino acids and amines in organic reactions. Part 12: Catalutic action of imidazole in acetone enolization. Ukr.khim. zhur. 30 no.7:723-728 '64 (MIRA 18:1)

1. Institut organicheskoy khimii AN UkrSSR.

APPROVED FOR RELEASE: 06/20/2000 CIA-RDP86-00513R001033420003-5"

"APPROVED FOR RELEASE: 06/20/2000 CIA-RDP86-00513R001033420003-5

MEL'NICHENKO, I.V.; YASNIKOV, A.A.

Catalytic action of amino acids and amines. Part 13: Specific action of histidine and histamine in aldol condensation of butyraldehyde. Ukr. khim. zhur. 30 no.8:838-847 '64. (MIRA 17:11)

1. Institut organicheskoy khimii AN UkrSSR.

APPROVED FOR RELEASE: 06/20/2000 CIA-RDP86-00513R001033420003-5"

"APPROVED FOR RELEASE: 06/20/2000 CIA-RDP86-00513R001033420003-5

MEL'NICHENKO, I.V.; SHILOV, Ye.A.; YASNIKOV, A.A.

Catalytic effect of amino acids and amines in organic reactions. Part 14: Mechanism of hydration of crotonic aldehyde. Ukr.khim. zhur. 30 no.11:1171-1178 '64. (MIRA 18:2)

APPROVED FOR RELEASE: 06/20/2000 CIA-RDP86-00513R001033420003-5"

"APPROVED FOR RELEASE: 06/20/2000 CIA-RDP86-00513R001033420003-5

VOLKOVA, N.V.; MEL'NICHENKO, I.V.; YASNIKOV, A.A.

Catalytic action of amino acids and amines in reactions of carbonyl compounds. Part 17: Catalytic action of lysine in iodination of acetol phosphate and acetone. Ukr. khim. zhur. 31 no.9:936-942 '65. (MIRA 18:11)

1. Institut organicheskoy khimii AN UkrSSR.

APPROVED FOR RELEASE: 06/20/2000 CIA-RDP86-00513R001033420003-5"

"APPROVED FOR RELEASE: 06/20/2000 CIA-RDP86-00513R001033420003-5

MEL'NICHENKO. K.

Savings Banks

Using deposits in savings banks for settling bills. Sov. fin. 13 no. 6, '52.

Monthly List for Russian Accessions, Library of Congress, September 1952. Unclassified.

APPROVED FOR RELEASE: 06/20/2000 CIA-RDP86-00513R001033420003-5"

"APPROVED FOR RELEASE: 06/20/2000 CIA-RDP86-00513R001033420003-5

MEL'NICHENKO, K.I., inzhener.

Hoisting mechanism with laminated chains. Gidr.stroi. 22 no.4:22-24 Ap '53. (MLRA 6:5)
(Hoisting machinery)

APPROVED FOR RELEASE: 06/20/2000 CIA-RDP86-00513R001033420003-5"

"APPROVED FOR RELEASE: 06/20/2000 CIA-RDP86-00513R001033420003-5

MEL'NICHENKO, K.I., laureat Stalinskoy premii; NEMENKO, L., vedushchiy redaktor; PISARENKO, V., tekhnicheskiy redaktor.

[Construction experience in building water power installations] Opyt montashnykh rabot na stroitel'stve gidrouslov. Kiev, Gos. izd-vo tekhn. lit-ry USSR, 1954. 135 p. [Microfilm] (MLRA 8:2)
(Hydroelectric power stations) (Hydraulic engineering)

APPROVED FOR RELEASE: 06/20/2000 CIA-RDP86-00513R001033420003-5"

"APPROVED FOR RELEASE: 06/20/2000 CIA-RDP86-00513R001033420003-5

MEL'NICHENKO, Konstantin Ivanovich; CHESNOKOV, B.S., redaktor; VORONIN, K.P., tekhnicheskiy redaktor.

[Installation of locks] Montazh oborudovaniia shliuza. Moskva, Gos. energeticheskoe izd-vo, 1955. 206 p. (MLRA 8:4)
(Locks (Hydraulic engineering))

APPROVED FOR RELEASE: 06/20/2000 CIA-RDP86-00513R001033420003-5"

"APPROVED FOR RELEASE: 06/20/2000 CIA-RDP86-00513R001033420003-5

SOV/137-57-10-19089

Translation from: Referativnyy zhurnal, Metallurgiya, 1957, Nr 10, p 95 (USSR)

AUTHOR: Mel'nichenko, K.I.

TITLE: Rolled-section Inventory Required for Hydroelectric Construction (Trebovaniya k sortamentu profiley prokata dlya stroitel'stva gidroelektrostantsiy)

PERIODICAL: V sb.: Ratsionalizatsiya profiley prokata. Moscow, Profizdat, 1956, pp 115-126

ABSTRACT: Rolled-metal requirements for hydroelectric construction is currently at 500,000 t per year and is distributed as follows among the various types of sections (S): Concrete reinforcing bars 50-60%; sheet, beams, channels, and bars 40%; piling 8-10%. The quality and cost of expensive, monumental hydroelectric structures depends upon the availability of S inventory at hand. So far as concrete reinforcement is concerned, the existing GOST government standards are essentially consistent with the needs of hydroelectric construction. The only change required is that the length of rods be extended to 18-24 m to reduce the number of joints, and that rods should be linked in 3 to 5-t packs to facilitate loading and unloading. A more

Card 1/2

APPROVED FOR RELEASE: 06/20/2000 CIA-RDP86-00513R001033420003-5"

"APPROVED FOR RELEASE: 06/20/2000 CIA-RDP86-00513R001033420003-5

SOV/137-57-10-19089

Rolled-section Inventory Required for Hydroelectric Construction

extensive use of deformed S would save 20% in metal. The inventory of sections for sheet piling has to be enlarged, and provision has to be made to roll sheet piling from Nr 5 and low-alloy steel, and to improve the quality and design of pile linkages. The beam, channel, and bar sections listed in the GOST government standards are essentially in accord with requirements, but the metallurgical industry does not produce all the S required. In addition, certain supplements should be made in the inventory. Thus, beams and channels with thicker webs, cross and Z-sections, shallow T-beams, asymmetrical beams, special heavy rails, and strip of faired cross section are required. All these S are needed in large quantities. Also needed is quality rolled steel, particularly stainless steel 4-6 mm thick, stainless strip and special high-strength plate steel of 20-50 mm gage.

S.G.

Card 2/2

APPROVED FOR RELEASE: 06/20/2000 CIA-RDP86-00513R001033420003-5"

"APPROVED FOR RELEASE: 06/20/2000 CIA-RDP86-00513R001033420003-5

MEL'NICHENKO, K. I.

ANDON'YEV, V.L.; BAUM, V.A.; BAUMGARTEN, N.K.; BEREZIN, V.D.; BIRYUKOV, I.K.; BIRYUKOV, S.M.; BLOKHIN, S.I.; BOROVOY, G.A.; BULEV, M.Z.; BURAKOV, N.A.; VERTSAYZER, B.A.; VOVK, G.M.; VORMAN, B.A.; VOSHCHININ, A.P.; GALAKTIONOV, V.D., kand. tekhn. nauk; GENKIN, Ye.M.; GIL'DENBLAT, Ya.D., kand. tekhn. nauk; GINZBURG, M.M.; GLEBOV, P.S.; GODES, E.G.; GORBACHEV, V.N.; GRZHIB, B.V.; GREKULOV, L.F., kand. s.-kh. nauk; GRODZENSKAYA, I.Ya.; DANILOV, A.G.; DMITRIYEV, I.G.; DMITRIYENKO, Yu.D.; DOBROKHOTOV, D.D.; DUBININ, L.G.; DUNDUKOV, M.D.; ZHOLIK, A.P.; ZENKEVICH, D.K.; ZIMAREV, Ye.V.; ZIMASKOV, S.V.; ZUBRIK, K.M.; KARANOV, I.F.; KNYAZEV, S.N.; KOLEGAYEV, N.M.; KOMAREVSKIY, V.T.; KOSENKO, V.P.; KORENISTOV, D.V.; KOSTROV, I.N.; KOTLYARSKIY, D.M.; KRIVSKIY, M.N.; KUZNETSOV, A.Ya.; LAGAR'KOV, N.I.; LGALOV, V.G.; LIKHACHEV, V.P.; LOGUNOV, P.I.; MATSKEVICH, K.F.; MEL'NICHENKO, K.I.; MENDELEVICH, I.R.; MIKHAYLOV, A.V., kand. tekhn. nauk; MUSIYEVA, R.N.; NATANSON, A.V.; NIKITIN, M.V.; OVES, I.S.; OGUL'NIK, G.R.; OSIPOV, A.D.; OSMER, N.A.; PETROV, V.I.; PERYSHKIN, G.A., prof.; P'YANKOVA, Ye.V.; RAPOPORT, Ya.D.; REMEZOV, N.P.; ROZANOV, M.P., kand. biol. nauk; ROCHEGOV, A.G.; RUBINCHIK, A.M.; RYBCHEVSKIY, V.S.; SADCHIKOV, A.V.; SEMENTSOV, V.A.; SIDENKO, P.M.; SINYAVSKAYA, V.T.; SITAROVA, M.N.; SOSNOVIKOV, K.S.; STAVITSKIY, Ye.A.; STOLYAROV, B.P. [deceased]; SUDZILOVSKIY, A.O.; SYRTSOVA, Ye.D., kand. tekhn. nauk; FILIPPSKIY, V.P.; KHALTURIN, A.D.; TSISHEVSKIY, P.M.; CHERKASOV, M.I.; CHERNYSHEV, A.A.; CHUSOVITIN, N.A.; SHESTOPAL, A.O.; SHEKHTER, P.A.; SHISHKO, G.A.; SHCHERBINA, I.N.; ENGEL', F.F.; YAKOBSON, A.G.; YAKUBOV, P.A., ARKHANGEL'SKIY,

(Continued on next card)

APPROVED FOR RELEASE: 06/20/2000 CIA-RDP86-00513R001033420003-5"

"APPROVED FOR RELEASE: 06/20/2000 CIA-RDP86-00513R001033420003-5

ANDON'YEV, V.L.... (continued) Card 2.
Ye.A., retsenzent, red.; AKHUTIN, A.N., retsenzent, red.; BALASHOV, Yu.S., retsenzent, red.; BARABANOV, V.A., retsenzent, red.; BATUNER, P.D., retsenzent, red.; BORODIN, P.V., kand. tekhn. nauk, retsenzent, red.; VALUTSKIY, I.I., kand. tekhn. nauk, retsenzent, red.; GRIGOR'YEV, V.M., kand. tekhn. nauk, retsenzent, red.; GUBIN, M.F., retsenzent, red.; GUDAYEV, I.N., retsenzent, red.; YERMOLOV, A.I., kand. tekhn. nauk, retsenzent, red.; KARAULOV, B.F., retsenzent, red.; KRITSKIY, S.N., doktor tekhn. nauk, retsenzent, red.; LIKIN, V.V., retsenzent, red.; LUKIN, V.V., retsenzent, red.; LUSKIN, Z.D., retsenzent, red.; MATRIROSOV, A.Kh., retsenzent, red.; MENDELEYEV, D.M., retsenzent, red.; MENKEL', M.F., doktor tekhn. nauk, retsenzent, red.; OBREZKOV, S.S., retsenzent, red.; PETRASHEN', P.N., retsenzent, red.; POLYAKOV, L.N., retsenzent, red.; RUMYANTSEV, A.M., retsenzent, red.; RYABCHIKOV, Ye.I., retsenzent, red.; STASENKOV, N.G., retsenzent, red.; TAKANAYEV, P.F., retsenzent, red.; TARANOVSKIY, S.V., prof., doktor tekhn. nauk, retsenzent, red.; TIZDEL', R.P., retsenzent, red.; FEDOROV, Ye.M., retsenzent, red.; SHEVYAKOV, M.N., retsenzent, red.; SHMAKOV, M.I., retsenzent, red.; ZHUK, S.Ya. [deceased], akademik, glavnyy red.; FLISO, G.A., kand. tekhn. nauk, red.; FILIMONOV, N.A., red.; VOLKOV, L.N., red.; GRISHIN, M.M., red.; ZHURIN, V.D., prof., doktor tekhn. nauk, red.; KOSTROV, I.N., red.; LIKHACHEV, V.P., red.; MEDVEDEV, V.M., kand. tekhn. nauk, red.; MIKHAYLOV, A.V., kand. tekhn. nauk, red.; PETROV, G.D., red.; RAZIN, N.V., red.; SOBOLEV, V.P., red.; FERINGER, B.P., red.; FRENGOFER,
(Continued on next card)

APPROVED FOR RELEASE: 06/20/2000 CIA-RDP86-00513R001033420003-5"

"APPROVED FOR RELEASE: 06/20/2000 CIA-RDP86-00513R001033420003-5

ANDON'YEV, V.L.... (continued) Card 3.
Ye.F., red.; TSYPLAKOV, V.D. [deceased], red.; KORABLINOV, P.N., tekhn. red.; GENKIN, Ye.M., tekhn. red.; KACHEROVSKIY, N.V., tekhn. red.

[Volga-Don; technical account of the construction of the V.I. Lenin Volga-Don Navigation Canal, the TSimlyansk Hydroelectric Center, and irrigation systems] Volgo-Don; tekhnicheskii otchet o stroitel'-stve Volgo-Donskogo sudokhodnogo kanala imeni V.I. Lenina, TSimlianskogo gidrouzla i orositel'nykh sooruzhenii, 1949-1952; v piati tomakh. Moskva, Gos. energ. izd-vo. Vol.1. [General structural descriptions] Obshchee opisanie sooruzhenii. Glav. red. S.IA. Zhuk. Red. toma M.M. Grishin. 1957. 319 p. Vol.2. [Organization of construction. Specialized operations in hydraulic engineering] Organizatsiia stroitel'stva. Spetsial'nye gidrotekhnicheskie raboty.

(Continued on next card)

APPROVED FOR RELEASE: 06/20/2000 CIA-RDP86-00513R001033420003-5"

"APPROVED FOR RELEASE: 06/20/2000 CIA-RDP86-00513R001033420003-5

ANDON'YEV, V.L.... (continued) Card 4.
Glav. red. S.IA. Zhuk. Red. toma I.N. Kostrov. 1958. 319 p.
(MIRA 11:9)

1. Russia (1923- U.S.S.R.) Ministerstvo elektrostantsii. Byuro tekhnicheskogo otcheta o stroitel'stve Volgo-Dona. 2. Chlen-korrespondent Akademii nauk SSSR (for Akhutin). 3. Deystvitel'nyy chlen Akademii stroitel'stva i arkhitektury SSSR (for Grishin, Razin).

(Volga Don Canal--Hydraulic engineering)

APPROVED FOR RELEASE: 06/20/2000 CIA-RDP86-00513R001033420003-5"

"APPROVED FOR RELEASE: 06/20/2000 CIA-RDP86-00513R001033420003-5

MEL'NICHENKO, K.I., red.; BUDANOV, G.V., otv. za vypusk; REZNIKOV, A.I., otv. za vypusk; PEVZNER, A.S., red.izd-va; TEYERMAN, T.M., tekhn.red.

[Cost manual for the assembling of equipment] TSennik na montazh oborudovaniia. Moskva, Gos.izd-vo lit-ry po stroit. i arkhit. No.22 [Equipment for hydroelectric power stations and hydraulic structures] Oborudovanie gidroelektricheskikh stantsii i gidrotekhnicheskikh sooruzhenii. 1958. 52 p. (MIRA 12:5)

1. Russia (1923- U.S.S.R.) Gosudarstvennyy komitet po delam stroitel'stva.
(Hydroelectric power stations--Equipment and supplies)
(Hydraulic engineering--Equipment and supplies)

APPROVED FOR RELEASE: 06/20/2000 CIA-RDP86-00513R001033420003-5"

"APPROVED FOR RELEASE: 06/20/2000 CIA-RDP86-00513R001033420003-5

LIPSHITS, V.V.; NAKHMANOVICH, B.M.; SENKEVICH, V.V.; MEL'NICHENKO, L.A.

Fermentation of pentose-hexose hydrolysates of vegetable wastes in a mixture with molasses by butylic bacteria. Mikrobiologiia 30 no.2:323-327 Mr-Ap '61. (MIRA 14:6)

1. Institut mikrobiologii AN USSR, Kiyev i Nauchno-issledovatel'skaya laboratoriya Dokshukinskogo atsetonovogo zavoda.
(ACETONE) (BACTERIA)

APPROVED FOR RELEASE: 06/20/2000 CIA-RDP86-00513R001033420003-5"

"APPROVED FOR RELEASE: 06/20/2000 CIA-RDP86-00513R001033420003-5

MEL'NICHENKO, L.A.

Eighth European Congress of the Workers of the Meat Industry Research Institutes. Mikrobiol. zhur. 25 no.2:70 '63. (MIRA 17:10)

APPROVED FOR RELEASE: 06/20/2000 CIA-RDP86-00513R001033420003-5"

"APPROVED FOR RELEASE: 06/20/2000 CIA-RDP86-00513R001033420003-5

1ST AND 2ND ORDERS

3RD AND 4TH ORDERS

PROCESSES AND PROPERTIES INDEX

C

S - 7 - 49

Accelerating the wet grinding of refractory materials. G. V. KUROLEV AND L. G. MELNICHENKO. *Ogneupory*, 13 [10] 447-54 (1948).—Various electrolytes and nonelectrolytes were tested in attempts to accelerate the wet grinding of magnesite, dolomites, sands, quartz, and quartzites. Grinding was done in 2-liter ball mills, using a ball-material water ratio of 1:1.0.57. Moisture content of the material was 3%. The material consisted of three fractions −3 +1.5 mm., −1.5 +0.5 mm., and −0.5 +0.2 mm. When used with distilled water, the electrolytes showed a selective effect. NaOH and soluble glass accelerated the grinding of magnesite and impeded the grinding of Nikitovo dolomite; soap had an accelerating effect on Nikitovo dolomite and no effect on magnesite. Nonelectrolytes such as sugar and molasses had very little effect. Saturation of the material and water in the mill with CO_2 had an accelerating effect. Preliminary impregnation of the material with a reagent had a positive influence only if the reagent was an accelerator. Preliminary heating and rapid cooling of the material in water produced opposite results, depending on the structure of the material; magnesite and Karagal dolomite were ground faster and Nikitovo dolomite slower. The use of tap water produced no substantial changes compared with distilled water, but the optimum concentrations of the accelerating reagents were somewhat higher. For low concentrations of electrolytes, the grinding curves had a maximum on both sides of which the effectiveness of grinding dropped. In separate instances there was an increase in effectiveness for relatively high concentrations. For soap the curve was different; for low concentrations the effectiveness increased rapidly and then insignificantly. The nature of the curves is explained on the basis of the adsorption processes taking place at the solid material-solution boundary.

B.Z.K.

ASM-SLA METALLURGICAL LITERATURE CLASSIFICATION

APPROVED FOR RELEASE: 06/20/2000 CIA-RDP86-00513R001033420003-5"

"APPROVED FOR RELEASE: 06/20/2000 CIA-RDP86-00513R001033420003-5

MEL'NICHENKO, L. G.

23294. Ob uskorenii mokrogo tonkogo razmola nekotorykh syryk materialov v silikatnoy promyshlennosti. Trudy zhar'k. Khim.-tekhnol. in-ta im. Kirova, vyp. 7, 1949, c. 115-24

SO: LETOPIS' NO. 31, 1949

APPROVED FOR RELEASE: 06/20/2000 CIA-RDP86-00513R001033420003-5"

"APPROVED FOR RELEASE: 06/20/2000 CIA-RDP86-00513R001033420003-5

II

ACS

Intensification of glassmelting by using sodium silicate. L. G. Mel'nichenko, V. P. Sokol'skiĭ, and T. S. Ostapenko. *Stekla i Keram.*, 8 [9] 8-9 (1951).—Sodium silicate (26% Na_2O) was added in amounts up to 6% to make up for lack of required (25 to 30%) domestic cullet and also to reduce the soda content in the charge. Optimum results were obtained with 5% silicate and 15% cullet. This resulted in faster melting than with 30% cullet and no silicate; average speed-up was 16%. The soda requirement was reduced by one third. The charge was melted in an experimental tank consisting of a melting section and cooling sections feeding one bottle machine. Charging was done by heaps every 30 min. The average temperature in the melting section was 1420 ± 5°. Composition of the glass was SiO_2 73.66, R_2O_3 1.30, CaO 8.0, MgO 1.04, and Na_2O 16.0%. The silicate was made at the plant from sand, technical sodium sulfate, and coal; its composition was SiO_2 71.66, R_2O_3 1.31, SO_3 0.99, CaO 1.11, MgO 0.4, and Na_2O 24.54%. B.Z.K.

APPROVED FOR RELEASE: 06/20/2000 CIA-RDP86-00513R001033420003-5"

"APPROVED FOR RELEASE: 06/20/2000 CIA-RDP86-00513R001033420003-5

2

CA

Some colloidal-chemical processes occurring in the system clay-water. L. G. Mel'nichenko (Kharkov Lenin Polytech. Inst.). *Ogneupory* 16, 81-8(1951).—In analyzing the surface phenomena of the system clay-water, it is necessary to consider the processes of hydrolysis of kaolinite. Such hydrolysis, in all probability, occurs gradually under ordinary conditions; it starts on the surface of the particles with the formation of intermediate protective compds., and the decompn. of the kaolinite into individual hydroxides begins only under more favorable conditions. The elec. charges on the kaolinite particles can occur as a result of the (1) direct dissocn. of "clay" acid with the sepn. in soln. of H^+ ions, which are in the cryst. cell of the kaolinite, and the formation of macroanion and (2) dissocn. of secondary intermediate compds. resulting from the hydrolysis of the locations with ruptured bonds. Solvation has a greater effect on relative stabilities of colloidal solns. than do the elec. charges. Solvation of clay particles and the formation and characteristics of bordering aq. films in the presence of electrolytes are not directly detd. by the hydration of the cations but to a greater degree by the strength of the bond between the cation and clay particle and by the degree of dissocn. of the ionogenic complex. B. Z. Kamich

1951

APPROVED FOR RELEASE: 06/20/2000 CIA-RDP86-00513R001033420003-5"

"APPROVED FOR RELEASE: 06/20/2000 CIA-RDP86-00513R001033420003-5

CA

20

Lowering the slurry moisture by compound additives.

L. G. Mel'nichenko and E. I. Kosiova. *Tsement* 17, No. 4, 15-17(1951).—A new type of dispersant was prepd. by extg. wheat straw with NaOH. Chopped straw (100 g.) in 1 l. of 1% NaOH was refluxed for 2 hrs., then kept for 15 hrs. at room temp., and filtered. The filtrate was a more effective dispersant for slurries than a 1% NaOH soln. at similar concn. The water content of the slurries could be reduced 8-10% by use of this dispersant. It is most effective at the water content at which the slurry changes from a plastic to a fluid state. M. Hosch

APPROVED FOR RELEASE: 06/20/2000 CIA-RDP86-00513R001033420003-5"

"APPROVED FOR RELEASE: 06/20/2000 CIA-RDP86-00513R001033420003-5

1ST AND 2ND ORDERS

PROCESSES AND PROPERTIES INDEX

3RD AND 4TH ORDERS

1

2

Accelerating wet grinding of raw materials for cement and reducing the moisture of the slurry. G. V. Kukolev and L. G. Mal'shchenko. *J. Applied Chem.* (U.S.S.R.), 24 [3] 231–41 (1951).—A study was made of the effects of various electrolytes, nonelectrolytes, and their mixtures on the wet grinding of marl and on the dilution of (1) slurry consisting of marl, chalk, and kaolin and (2) slurry from cement works. In most cases, dispersion of marl proceeded more rapidly in the presence of electrolytes than in water alone; caustic soda and hydrolysing alkali salts accelerated dispersion considerably. Soda was most active, followed by caustic soda and the less active water glass. The effect of electrolytes varied with their concentration; soda and water glass had a maximum, but for the latter there was a retarding effect as the concentration was increased. A mixture of soda and water glass had a positive effect; NaCl had no effect, but in mixture with soda it had a smaller accelerating effect than soda alone of the same concentration. A saturated solution of lime retarded grinding, but hydrochloric and carbonic acids accelerated grinding considerably. The effect of organic admixtures alone or with alkaline electrolytes was always positive; the effect was considerable in the presence of molasses, sulfite-cellulose liquor, and peat extract in water glass and somewhat lower for soap and peat extract in caustic soda. By selecting proper reagents it is possible to increase the output of a mill by 25 to 30%. The most effective dilution compounds with regard to slurry consisting of marl, chalk, and kaolin were the same as those most effective in the dispersion of the marl. The most effective agents in the dilution of cement slurry were mixtures of organic compounds and alkaline electrolytes; the effect was pronounced even for low concentrations. With increasing concentration, the effect of alkali and alkali salts reaches a maximum and then decreases, and finally the slurry thickens. Organic compounds increase the dilution at first, but with further addition there is no substantial change. B.Z.K.

ASM-SLA METALLURGICAL LITERATURE CLASSIFICATION

APPROVED FOR RELEASE: 06/20/2000 CIA-RDP86-00513R001033420003-5"

"APPROVED FOR RELEASE: 06/20/2000 CIA-RDP86-00513R001033420003-5

CA

21

Accelerating the wet grinding of raw materials for cement and reducing the moisture content of the slurry. G. V. Kukolev and L. G. Melnichenko. *J. Applied Chem. U.S.S.R.* 24, 255-65(1951)(Engl. translation).—The effect

decreases in the order Na_2CO_3, $Na_2O.SiO_2$, NaOH. The presence of sol. salts or org. matter, i.e. sulfite-cellulose lye or peat ext., in addn. increases the effect. The additives act on clay but not on $CaCO_3$. Oscar Guire

APPROVED FOR RELEASE: 06/20/2000 CIA-RDP86-00513R001033420003-5"

"APPROVED FOR RELEASE: 06/20/2000 CIA-RDP86-00513R001033420003-5

MEL'NICHENKO, K.G.

4

The effect of treatment with different solutions on the chemical stability of glass. L. G. Mel'nichenko, N. N. Smirnov, and N. I. Zelentsova. *Nauch.-Tekh. Inform. Byull. Vsesoyuz. Nauch. Issledovatel. Inst. Stekla* 1953, No. 2, 20-5. *Referat. Zhur., Khim.* 1956, No. 1491.—The effect of preliminary chem. treatment of glass bottles on their water resistance is investigated. It is shown that keeping pure water in bottles increases their chem. stability only slightly. Similar results are obtained by treatment of bottles with solns. of $MgCl_2$, $ZnCl_2$, $BaCl_2$, and $Pb(NO_3)_2$, the cation radii of which differ considerably in size from the Na cation. Treatment of the bottles with $CaCl_2$ and HCl solns. increases their chem. resistance considerably, which may be explained by the similar size of Na^+ and Ca^{++} cations. It is assumed that while the water solns. are kept in the bottles, the boundary surface water-glass is considerably strengthened, resulting in better water resistance. It is suggested that bottles be treated with weak solns. of $CaCl_2$, $AlCl_3$, etc. in order to improve their chem. stability. N. Vasileff

APPROVED FOR RELEASE: 06/20/2000 CIA-RDP86-00513R001033420003-5"

"APPROVED FOR RELEASE: 06/20/2000 CIA-RDP86-00513R001033420003-5

MEL'NICHENKO, L. G.

62 Determination of characteristics of alkali-free glass. L. G. Mel'nichenko and L. L. Chernina. *Stekla i Keram.* 10, No. 5, 10-12(1953).—Mol. vol., n, dispersion, and coeff. of expansion were detd. by method of additivity and by new method of Apper, *et al.* (*CA*, 45, 8215*i*). The new method gives better results; this was checked experimentally. B. Z. Kamich

APPROVED FOR RELEASE: 06/20/2000 CIA-RDP86-00513R001033420003-5"

"APPROVED FOR RELEASE: 06/20/2000 CIA-RDP86-00513R001033420003-5

USSR/ Chemistry - Crystallic structure

Card 1/1 Pub. 104 - 2/11

Authors : Mel'nichenko, L. G.

Title : The D. I. Mendeleyev theoretical views regarding the structure of silicates and glass

Periodical : Stek. i ker. 4, 4-6, Apr 1954

Abstract : The contributions of Russian scientists and especially D. I. Mendeleyev to the development of Soviet glass manufacturing industries, are outlined. Various excerpts from reports by Mendeleyev and other Russian scientists on the structure of silicates and glass, are quoted. Four USSR references (1864-1953).

Institution: .....

Submitted: .....

APPROVED FOR RELEASE: 06/20/2000 CIA-RDP86-00513R001033420003-5"

"APPROVED FOR RELEASE: 06/20/2000 CIA-RDP86-00513R001033420003-5

MEL'NICHENKO, L.G.

USSR/ Chemistry - Glass manufacture

Card 1/1 Pub. 104 - 4/14

Authors : Mel'nichenko, L. G.

Title : Moulding properties of glass batches

Periodical : Stek. i ker. 11/11, 9-12, Nov 1954

Abstract : The problem of forming into briquets the materials that are to be put into the furnace for melting in glass manufacture is discussed. An analysis is made of the dependence of the toughness of the briquets on their ingredients, temperature, and the pressure used in their formation. Two USSR references (1951-1952). Graphs.

Institution: .....

Submitted: .....

APPROVED FOR RELEASE: 06/20/2000 CIA-RDP86-00513R001033420003-5"

"APPROVED FOR RELEASE: 06/20/2000 CIA-RDP86-00513R001033420003-5

MEL'NICHENKO, L. G.

Thinning action of carbonaceous addition on cement slurry.

L. G. MEL'NICHENKO AND L. P. PAPKOVA. *Tsement*, 20 [0] 11-10 (1954). Optimum thinning effect on cement slurry was obtained by the use of "smolka" (a 1:1 mixture of wet-ground carbon and alkaline slag). An amount of 1.25% reduces the moisture content of slurry by 9.5%. After 5 to 7 days, slurry containing the "smolka" shows no change in fluidity. B.Z.K.

MT

(1)

APPROVED FOR RELEASE: 06/20/2000 CIA-RDP86-00513R001033420003-5"

"APPROVED FOR RELEASE: 06/20/2000 CIA-RDP86-00513R001033420003-5

MEL'NICHENKO, L. G.

Category : USSR/Atomic and Molecular Physics - Liquids D-8

Abs Jour : Ref Zhur - Fizika, No 3, 1957, No 6436

Author : Mel'nichenko, L.G.
Title : Is Glass a Unique Colloid?

Orig Pub : Stroyeniye stekla. M.-L., AN SSSR, 1955, 302-303

Abstract : The author does not agree with the assumption that the structure of glass is completely homogeneous, an assumption that serves as the basis for the works by A.A. Appen (Referat Zhur Fizika, 1955, 4676; 1956, 31508, etc), and therefore recalls the existence of the so-called colloidal theory of structure of glass (an idea originating with D.I. Mendeleyev, later developed in the work by Berger, Liesegang, Travers, and others). If such an approach is used, it is not always necessary to require that there exists a geometrical separation boundary between the phases of an inhomogeneous system.

Card : 1/1

APPROVED FOR RELEASE: 06/20/2000 CIA-RDP86-00513R001033420003-5"

"APPROVED FOR RELEASE: 06/20/2000 CIA-RDP86-00513R001033420003-5

AUTHORS: Mel'nichenko, L. G., Kharitonov, F. Ya. 72-58-5-6/18

TITLE: Accelerating the Glass-Melting Process by Activating the Charge (Uskoreniye protsessa varki stekla putem aktivizatsii shikhty)

PERIODICAL: Steklo i Keramika, 1958, 15, Nr 5, pp. 18-21 (USSR)

ABSTRACT: In laboratory experiments the meltability of the charge was investigated, the latter having been activated by additions, fine crushing, briquetting, as well as by combining the mentioned methods. The experiments were carried out with soda and soda sulfate charges of industrial glass as currently produced. The composition of the charge and the preparation are described in detail. The melting velocity was investigated for 8 different kinds of charges, namely: the usual, the usual with additions, the usual briquetted, the usual with additions of the briquetted one, the vibroground, the vibroground with additions, the vibroground briquetted, and the vibroground with additions of briquetted one. The coefficient of melting acceleration as compared to the usual charge was taken as a criterion of the meltability of the activated charges, In tables 1 and 2 the results are mentioned. The

Card 1/ 3

APPROVED FOR RELEASE: 06/20/2000 CIA-RDP86-00513R001033420003-5"

"APPROVED FOR RELEASE: 06/20/2000 CIA-RDP86-00513R001033420003-5

velocity of the formation of glass was determined according to the somehow changed method by A. P. Zak and is further described. In table 3 the effect of the single activation factors on the meltability is represented. The following charges proved to be best with regard to their experimental results: the vibroground with additions briquetted; the vibroground with additions, or the vibroground briquetted respectively. As a fine crushing is at present not possible at industrial scales the briquetting of the usual coarsely grained charge with additions should be introduced in glass factories. As can be seen from earlier papers as well as from the experiments of the Institute for Glass a common addition of 0.5% fluor spar and 0.75% boron anhydride essentially accelerates the melting process. It is useful to take combined additions (0.5% CaF_2 + 0.75% B_2O_3). The technology of the activated charge preparation should be adapted to the individual factory factors. The activation of the charge makes it possible to increase the output of the furnaces, to drop the melting temperature and to reduce the fuel consumption, as well as to reduce the content of

APPROVED FOR RELEASE: 06/20/2000 CIA-RDP86-00513R001033420003-5"

"APPROVED FOR RELEASE: 06/20/2000 CIA-RDP86-00513R001033420003-5

Accelerating the Glass-Melting Process by Activating the Charge 72-58-5-6/18

alkalies in glass. Besides, the properties of the products can be improved and the melts of high-melting types of glass can be made easier. Also the operation duration of ash furnaces is prolonged this way. Note by the editor: The final consequences regarding this method can be drawn on practical experience of the factories only.
There are 3 tables.

ASSOCIATION: Khar'kovskiy politekhnicheskiy institut imeni V. I. Lenina (Khar'kov Polytechnical Institute imeni V. I. Lenin)

AVAILABLE: Library of Congress

1. Glass--Production 2. Glass--Processing 3. Glass--Test methods

Card 3/3

APPROVED FOR RELEASE: 06/20/2000 CIA-RDP86-00513R001033420003-5"

"APPROVED FOR RELEASE: 06/20/2000 CIA-RDP86-00513R001033420003-5

Mel'nichenko, L. G.

15(2)

AUTHOR: None Given SOV/72-59-5-1/23

TITLE: Glass Science at the VIII Mendeleyev Congress (Nauka o stekle na VIII Mendeleyevskom s"yezde)

PERIODICAL: Steklo i keramika, 1959, Nr 5, pp 1-4 (USSR)

ABSTRACT: In the beginning a proclamation of the TsK KPSS to the personnel of the building material industries for a qualitative and quantitative increase of production is mentioned. The Congress took place in Moscow in the second half of March of the current year and was devoted to the 125th anniversary of the great scholar's birthday. Outstanding chemists of the Soviet Union and the People's Democracies attended the Congress. The principal problems of the development of chemistry were discussed at the plenary meetings and the meetings of the 18 Congress sections. Professor I. I. Kitaygorodskiy opened the meetings of the sub-section for glass and gave a survey of the stages of development of Soviet glass production as well as of a number of promising tasks in the field of glass technology. Moreover, the following lectures were held: Doctor Korani (People's Republic of Hungary) investigated the structure of the top-layers of glass;

Card 1/4

A. I. Avgustinnik (LTI imeni Lensovet) discussed the formation of a finely disperse crystalline phase from the glass-like phase; V. V. Vargin and G. O. Karapetyan (GOI) reported on absorption spectra, luminiscence, and photochemical properties of cerium-glass types; A. G. Vlasov (GOI) reported on the quantitative reciprocal relations between ordered and disordered glass phases; Ye. A. Poray-Koshits, Institut khimii silikatov AN SSSR (Institute of Silicate Chemistry of the AS USSR) discussed the reasons for the disagreement on the problem of the structure of glass-like substances; Professor O. K. Botvinkin, N. I. Ananich, and M. L. Mironova, Institut stekla (Glass Institute) reported on the Investigation of the Glass Structure by the Method of Thermal Analysis and Optical Polarization; Ye. V. Podushko (GOI) discussed the new method of electric glass melting and the melting of silicates by means of high-frequency current; Yu. G. Shteynberg reported on strontium-magnesium glazes without lead and boron for faience and majolica which have been developed in the Gosudarstvennyy nauchno-issledovatel'skiy keramicheskiy institut (State Scientific Research Institute of Ceramics); L. S. Yastrebova, and V. S. Molchanov (GOI) discussed the role played by the

Card 2/4

surface protection film in the destruction of silicate glasses; G. I. Veynberg (GOI) discussed the coloring characteristics and the technology of phosphate glasses; O. V. Mazurin (LTI) reported on the mobility of sodium ions in glass types of the system Na_2O-RO-SiO_2; Z. A. Nosova (NII Stroykeramika) discussed the process of subduing the glazes by lead oxide and zirconium; L. G. Mel'nichenko, Khar'kovskiy politekhnicheskiy institut (Khar'kov Polytechnic Institute) reported on silicate formation and sintering processes in the briquetted glass layer; K. M. Yevstrop'yev investigated various types of glass; N. N. Smenov (Glass Institute) reported on the determination of impurities in silica by spectroscopic analysis; G. S. Bogdanova, and Ye. M. Orlova (Glass Institute) reported on types of electrode glass which has been devised by them. Yu. V. Rogozhin (Glass Institute) discussed the kinetics of the formation of crystallization centers in photo-sensitive types of glass ; Z. M. Syritskaya (Glass Institute) discussed the results of the investigation of the tendency of phosphatic systems towards glass formation; L. A. Grechanik, N. V. Patrovykh, and V. G. Karpechenko (NIIES) reported on the investigation of types of semiconducting oxide glass on the basis of V_2O_5 ; N. V. Solomin, L. A. Grechanik, I. V. Shpakova, and Ye. A. Faynberg (NIIES) discussed the production of conductive films on types of glass which contain components easily to be regenerated.

APPROVED FOR RELEASE: 06/20/2000 CIA-RDP86-00513R001033420003-5"

"APPROVED FOR RELEASE: 06/20/2000 CIA-RDP86-00513R001033420003-5

NEL NICHENKO, L. G.

PHASE I BOOK EXPLOITATION SOV/5035

Vsesoyuznoye soveshchaniye po stekloobraznomu sostoyaniyu. 3d, Leningrad, 1959.

Stekloobraznoye sostoyaniye; trudy Tret'yego vsesoyuznogo soveshchaniya Leningrad, 16-20 noyabrya 1959 (Vitreous State; Transactions of the Third All-Union Conference on the Vitreous State, Held in Leningrad on November 16-20, 1959) Moscow, Izd-vo AN SSSR, 1960. 534 p. Errata slip inserted. 3,200 copies printed. (Series: Its: Trudy)

Sponsoring Agencies: Institut khimii silikatov Akademii nauk SSSR. Vsesoyuznoye khimicheskoye obshchestvo imeni D.I. Mendeleyeva and Gosudarstvennyy ordena Lenina opticheskiy institut imeni S.I. Vavilova.

Editorial Board: A.I. Avgustinik, V.P. Barzakovskiy, M.A. Bezborodov, O.K. Botvinkin, V.V.Vargin, A.G. Vlasov, K.S. Yevstrop'yev, A.A. Lebedev, M.A. Matveyev, V.S. Molchanov, R.L. Myuller, Ye.A. Poray-Koshits, Chairman, N.A. Toropov, V.A. Florinskaya, A.K. Yakhkind; Ed. of Publishing House: I.V. Suvorov; Tech. Ed.: V.T. Bochever.

PURPOSE: This book is intended for researchers in the science and technology of glasses.

COVERAGE: The book contains the reports and discussions of the Third All-Union Conference on the Vitreous State, held in Leningrad on November 16-19, 1959. They deal with the methods and results of studying the structure of glasses, the relation between the structure and properties of glasses, the nature of the chemical bond and glass structure, and the crystallochemistry of glass. Fused silica, mechanism of vitrification, optical properties and glass structure, and the electrical properties of glasses are also discussed. A number of the reports deal with the dependence of glass properties on composition, the tinting of glasses and radiation effects, and mechanical, technical, and chemical properties of glasses. Other papers treat glass semiconductors and soda borosilicate glasses. The Conference was attended by more than 300 delegates from Soviet and East German scientific organizations. Among the participants in the discussions were N.V. Solomin, Ye. V. Kuvshinskiy, Yu.A. Gastev, V.P. Pryanishnikov, Yu. Ya. Gotlib, O.P. Mchedlov-Petrosyan, G.P. Mikhaylov, S.M. Petrov, A.N. Lazarev, D.I. Levin, A.V. Shatilov, N.T. Ploshchinskiy, A.Ya. Kuznetsov, E.V. Degtyareva, O.V. Byurganovskaya, A.A. Kalenov, M.M. Skornyakov, P.Ya. Bokin, E.K. Keller, Ya.A. Kuznetsov, V.P. Pozdnev, R.S. Shevelevich, Z.G. Pinsker, and O.S. Molchanova. The final session of the Conference was addressed by Professor I.I. Kitaygorodskiy, Honored Scientist and Engineer, Doctor of Technical Sciences. The following institutes were cited for their contribution to the development of glass science and technology: Gosudarstvennyy opticheskiy institut (State Optical Institute), Institut khimii silikatov AN SSSR (Institute of Silicate Chemistry, AS USSR), Fizicheskiy institut AN SSSR (Physics Institute AS USSR), Fiziko-tekhnicheskiy institut AN SSSR (Physicotechnical Institute AS USSR), Institut fiziki AN BSSR, Minsk (Institute of Physics, Academy of Sciences, Belorusskaya SSR, Minsk), Laboratory of Physical Chemistry of Silicates of the Institut obshchey i neorganicheskoy khimii AN BSSR, Minsk (Institute of General and Inorganic Chemistry, Academy of Sciences, Belorusskaya SSR, Minsk), Institut vysokomolekulyarnykh soyedineniy AN SSSR (Institute of High Molecular Compounds, AS USSR), Gosudarstvennyy institut stekla (State Institute for Glass), Gosudarstvennyy institut steklovolokna (State Institute for Glass Fibers), Gosudarstvennyy institut elektrotekhnicheskogo stekla (State Institute for Electrical Glass), Sibirskiy fiziko-technicheskiy institut, Tomsk (Siberian Physicotechnical Institute, Tomsk), Leningradskiy gosudarstvennyy universitet (Leningrad State University), Moskovskiy khimiko-tekhnologicheskiy institut (Moscow Institute of Chemical Technology), Leningradskiy tekhnologicheskiy institut im. Lensoveta (Leningrad Technological Institut imeni Lensovet), Belorusskiy politekhnicheskiy institut Minsk (Belorussian Polytechnic Institute, Minsk), Novocherkasskiy politekhnicheskiy institut (Novocherkassk Polytechnic Institute), and Sverdlovskiy politekhnicheskiy institut (Sverdlovsk Polytechnic Institute). The Conference was sponsored by the Institute of Silicate Chemistry AS USSR (Acting Director - A.S. Gotlib), the Vsesoyuznoye khimicheskoye obshchestvo im. D.I. Mendeleyeva (All-Union Chemical Society imeni D.I. Mendeleyev), and the Gosudarstvennyy ordena Lenina opticheskiy institut imeni S.I. Vavilova (State "Order of Lenin" Optical Institute imeni S.I. Vavilov). The 15 resolutions of the Conference include recommendations to organize a Center for the purpose of coordinating the research on glass, to publish a new periodical under the title "Fizika i khimiya stekla" (Physics and Chemistry of Glass), and to join the International Committee on Glass. The Conference thanks A.A. Lebedev, Academician, Professor, and Chairman of the Organization of Committee; Ye.A. Poray-Koshits, Doctor of Physics and Mathematics, Member of the Organizational Committee; and R.L. Myuller, Doctor of Chemical Sciences, Member of the Organizational Committee. The editorial board thanks G.M. Bartenev, N.V. Vol'kenshteyn, L.I. Demkina, D.P. Dobychin, S.K. Dubrovo, V.A. Ioffe, and B.T. Kolomiyets. References accompany individual reports.

APPROVED FOR RELEASE: 06/20/2000 CIA-RDP86-00513R001033420003-5"

"APPROVED FOR RELEASE: 06/20/2000 CIA-RDP86-00513R001033420003-5

Relation Between the Structure and Properties of Glasses

Yevstrop'yev, K.S. General Problems of Structure and Properties of Glasses 39

Demkina, L.I. Additivity of Silica Glass Properties in Connection With Their Structure 48

Bezborodov, M.A. Vitreous Systems and the Problem of Glass Structure 55

Nature of the Chemical Bond and Structure of Glasses

Myuller, R.L. [Doctor of Chemical Sciences]. Chemical Properties of Polymeric Glass-Forming Substances and the Nature of Vitrification 61

Goryunova, N.A., and B.T. Kolomiyets. Problem of Vitrification Regularities in Chalcogenide Glasses 71

Taranov, V.V. Glass as a Polymer 78

"Crystallochemistry of Glass"

Belov, N.V. [Academician]. Glass Structure in the Light of the Crystal Chemistry of Silicates 91

Discussion 98

FUSED SILICA. MECHANISM OF VITRIFICATION

Fused Silica

Avgustinik, A.I. On the Problem of Crystal Phase Formation From Fused Silica 115

Botvinkin, O.K. Vitrification Process and Glass Structure 120

Mel'nichenko, L.G. On the Problem of Forming the Glass Structure During ~~the Melting Process~~ 123

Lopinskikh, B.M., O.A. Yesin, and V.I. Musikhin. Anisotropy of Electrical Conductivity of Fused Silica and Borates in Flow 125

Yermolenko, N.N. On the Problem of Glass Forming 128

Chechulin, V.A., and O.A. Yesin. Electrolysis of Liquid Aluminosilicates 129

Sryvalin, I.T., and O.A. Yesin. Thermodynamic Properties of Fused Silica of $CaO-FeO-SiO_2$ and $CaO-Al_2O_3-SiO_2$ Systems 130

Discussion 131

Mechanism of Vitrification

Vol'kenshteyn, M.V. On the Structural and Kinetic Characteristics of the Vitreous State 132

Anufriyeva, Ye.V., and M.V. Volkenshteyn. On the Luminescence Method of Studying the Vitrification of Polymers 138

Bolotina, I.A. Optical Activity and Vitrification 142

APPROVED FOR RELEASE: 06/20/2000 CIA-RDP86-00513R001033420003-5"

"APPROVED FOR RELEASE: 06/20/2000 CIA-RDP86-00513R001033420003-5

MELNICHENKO, L. G.

"On structure and strength of real glass."

report submitted for 4th All-Union Conf on Structure of Glass, Leningrad, 16-21 Mar 64.

APPROVED FOR RELEASE: 06/20/2000 CIA-RDP86-00513R001033420003-5"

"APPROVED FOR RELEASE: 06/20/2000 CIA-RDP86-00513R001033420003-5

KHARITONOV, F.Ya., inzh.; MEL'NICHENKO, L.G., kand. tekhn. nauk

Some kinetic principles of the glass forming process.
Stek. i ker. 20 no.7:5-8 Jl '63. (MIRA 17:2)

1. Gosudarstvennyy issledovatel'skiy elektrokeramicheskiy institut (for Kharitonov). 2. Khar'kovskiy politekhnicheskiy institut (for Mel'nichenko).

APPROVED FOR RELEASE: 06/20/2000 CIA-RDP86-00513R001033420003-5"

"APPROVED FOR RELEASE: 06/20/2000 CIA-RDP86-00513R001033420003-5

MEL'NICHENKO, L.G., kand. tekhn. nauk; SAFRONOVA, V.P., inzh.

Developing compositions and investigating the properties and structure of crystallized melts from local raw materials. Stek. i ker. 22 no.7: 9-12 Jl '65. (MIRA 18:9)

1. Ukrainskiy zaochnyy politekhnicheskiy institut.

APPROVED FOR RELEASE: 06/20/2000 CIA-RDP86-00513R001033420003-5"

"APPROVED FOR RELEASE: 06/20/2000 CIA-RDP86-00513R001033420003-5

KHARITONOV, F.Ya., inzh.; MEL'NICHENKO, I.G., kand. tekhn. nauk

Investigating the glass batch clarification process. Stek. i ker. 22 no.9:29-32 S '65. (MIRA 18:9)

1. Gosudarstvennyy nauchno-issledovatel'skiy elektrokeramicheskiy institut (for Kharitonov). 2. Khar'kovskiy politekhnicheskiy institut (for Mel'nichenko).

APPROVED FOR RELEASE: 06/20/2000 CIA-RDP86-00513R001033420003-5"

"APPROVED FOR RELEASE: 06/20/2000 CIA-RDP86-00513R001033420003-5

L 33058-66 EWT(1)/EWP(e)/EWT(m)/EWP(f)/T-2 WW/WH

ACC NR: AP6024076 SOURCE CODE: UR/0066/66/000/002/0010/0018

AUTHOR: Mel'nichenko, L. G. (Docent); Truskov, P. F. (Candidate of technical sciences); Kritskiy, Ye. D.

ORG: none

55
B

TITLE: Method and results of investigation of wear of materials for bearings in sealed cooling compressors 23

SOURCE: Kholodil'naya tekhnika, no. 2, 1966, 10-18

TOPIC TAGS: cryogenic fluid compressor, ball bearing, bearing material, wear resistant alloy, corrosion resistant alloy, bronze/BrSuN-7-2 bronze, BrØF-10-1 bronze

ABSTRACT: Experimental results presented here on bearing material wear agree well with experience of seizure on the job. As a result of experiments performed under varying conditions, the authors conclude that: the resistance to seizure and wear of the materials investigated in a freon-22 medium is considerably poorer than in the air. The highest seizure resistance and greatest wear stability at load pressures up to 100 kg/mm^2 was exhibited by bronze alloy BrSuN-7-2. This alloy has lower strength than lead bronze type BrOF-10-1, however. With the same load levels, bronze-graphites have much poorer anticorrosion qualities. The most promising metal for operation in freon compressors is therefore BrSuN-7-2. Orig. art. has: 5 figures and 2 tables. [JPRS]

SUB CODE: 13, 11 / SUBM DATE: none / ORIG REF: 014

Card 1/1 UDC: 621.57.041:621.822

APPROVED FOR RELEASE: 06/20/2000 CIA-RDP86-00513R001033420003-5"

"APPROVED FOR RELEASE: 06/20/2000 CIA-RDP86-00513R001033420003-5

MEL'NICHENKO, L. I.

2

4645. Improvement of adhesion of vulcanized rubber to a brass-plated surface. (Proposed by U. S. Reibshteinaan). L. I. MEL'NICHENKO. Sb. Rev. Predlozh. [illegible] SSSR 1956, No. 6 (64), 28-7. Referat. Zh. Khim., 1957, abs. 17178. In order to reduce wastage in the rubber-coating of brass-plated rollers or other components they are immersed in a 15 to 17% solution of acetic acid for [illegible] washed and dried. It is not possible to [illegible] castings of Silumin rollers with rubber without such treatment. 6541

4E2c
2 May

APPROVED FOR RELEASE: 06/20/2000 CIA-RDP86-00513R001033420003-5"

"APPROVED FOR RELEASE: 06/20/2000 CIA-RDP86-00513R001033420003-5

GYUNNER, E.A.; MEL'NICHENKO, L.M.

Complex formation in the system silver nitrate - urotropine - methanol. Zhur. neorg. khim. 9 no.5:1297-1298 My '64. (MIRA 17:9)

1. Krymskiy pedagogicheskiy institut imeni M.V. Frunze.

APPROVED FOR RELEASE: 06/20/2000 CIA-RDP86-00513R001033420003-5"

"APPROVED FOR RELEASE: 06/20/2000 CIA-RDP86-00513R001033420003-5

GRUNNER, E.A.; MEL'NICHENKO, L.M.

Reaction of mercury halides with urotropine in aqueous and methanol solutions. Ukr. khim. zhur. 31 no.6:632-633 '65. (MIRA 18:7)

1. Krymskiy pedagogicheskiy institut imeni Frunze.

APPROVED FOR RELEASE: 06/20/2000 CIA-RDP86-00513R001033420003-5"

"APPROVED FOR RELEASE: 06/20/2000 CIA-RDP86-00513R001033420003-5

GYUNNER, E.A.; MEL'NICHENKO, L.M.

Types of refractograms in the investigation of reactions in the systems electrolyte I - electrolyte II - water and electrolyte - nonelectrolyte - water according to the continuous measurement method. Zhur. ob. khim. 35 no.10:1695-1702 O '65. (MIRA 18:10)

1. Krymskiy pedagogicheskiy institut imeni M.V. Frunze.

APPROVED FOR RELEASE: 06/20/2000 CIA-RDP86-00513R001033420003-5"

"APPROVED FOR RELEASE: 06/20/2000 CIA-RDP86-00513R001033420003-5

GYUNNER, E.A.; MEL'NICHENKO, L.M.

Refractometry of precipitation reactions in the systems A - B - D H_2O. Zhur. neorg. khim. 10 no.9:2175-2179 S '65. (MIRA 18:10)

1. Krymskiy pedagogicheskiy institut imeni Frunze.

APPROVED FOR RELEASE: 06/20/2000 CIA-RDP86-00513R001033420003-5"

"APPROVED FOR RELEASE: 06/20/2000 CIA-RDP86-00513R001033420003-5

GYUNNER, E.A.; MEL'NICHENKO, L.M.

Urotropine compounds with silver chromate. Zhur.neorg.khim. 10 no.12:2606-2610 D '65. (MIRA 19:1)

1. Krymskiy pedagogicheskiy institut imeni Frunze.

APPROVED FOR RELEASE: 06/20/2000 CIA-RDP86-00513R001033420003-5"

"APPROVED FOR RELEASE: 06/20/2000 CIA-RDP86-00513R001033420003-5

AUTHOR: Mel'nichenko, N.F. SOV-3-58-10-8/23

TITLE: To Prove and to Convince (Dokazyvat' i ubezhdat')

PERIODICAL: Vestnik vysshey shkoly, 1958, Nr 10, pp 43 - 47 (USSR)

ABSTRACT: The author discusses methods to be adopted in teaching and learning philosophy, in particular dialectical and historical materialism. Although the students of the Khar'kovskiy bibliotechnyy institut (Khar'kov Library Institute) are studying this subject well, the author wishes them to show a more critical mind, taking less on trust and devoting themselves more to analysis. There are 3 Soviet references.

ASSOCIATION: Khar'kovskiy bibliotechnyy institut (Khar'kov Library Institute)

Card 1/1

APPROVED FOR RELEASE: 06/20/2000 CIA-RDP86-00513R001033420003-5"

"APPROVED FOR RELEASE: 06/20/2000 CIA-RDP86-00513R001033420003-5

MEL'NICHENKO, N. I.

Electricity - Experiments

Practical exercises with electricity. Fiz. v shkole no. 5, 1952.

Monthly List of Russian Accessions, Library of Congress, December 1952. Unclassified.

APPROVED FOR RELEASE: 06/20/2000 CIA-RDP86-00513R001033420003-5"

"APPROVED FOR RELEASE: 06/20/2000 CIA-RDP86-00513R001033420003-5

MEL'NICHENKO, N. I.

Electric Currents

Problems on the laws of direct electric current, Fiz, v shkole 12 no. 2, 1952.

Monthly List of Russian Accessions, Library of Congress, May 1952. Unclassified.

APPROVED FOR RELEASE: 06/20/2000 CIA-RDP86-00513R001033420003-5"

"APPROVED FOR RELEASE: 06/20/2000 CIA-RDP86-00513R001033420003-5

MEL'NICHENKO, N.I. (Moscow)

"Textbook of physics." Part 3, A.V. Peryshkin. Reviewed by N.I. Mel'nichenko. Fiz. v shkole 14 no.6:84-90 N-D '54.
(Physics) (Peryshkin,A.V.) (MLRA 7:12)

APPROVED FOR RELEASE: 06/20/2000 CIA-RDP86-00513R001033420003-5"

"APPROVED FOR RELEASE: 06/20/2000 CIA-RDP86-00513R001033420003-5

MEL'NICHENKO, N.I. (Moskva)

"Aerodynamics in nature and technology". V.P. Kaznevskii. Reviewed by N.I. Mel'nichenko. Fiz.v shkole 16 no.1:77-79 Ja-Fe '56. (MLRA 9:3)

(Aerodynamics) (Kaznevskii, V.P.)

APPROVED FOR RELEASE: 06/20/2000 CIA-RDP86-00513R001033420003-5"

"APPROVED FOR RELEASE: 06/20/2000 CIA-RDP86-00513R001033420003-5

24(8) SOV/155-59-1-29/30

AUTHOR: Mel'nichenko, N.I.

TITLE: The Dependence of the Product of the Specific Volumes of the Saturated Steam and the Fluid on the Temperature

PERIODICAL: Nauchnyye doklady vysshey shkoly. Fiziko-matematicheskiye nauki, 1959, Nr 1, pp 185-187 (USSR)

ABSTRACT: Let V and v be the specific volumes of the saturated steam and the fluid in the state of equilibrium. v_k-critical volume, and τ-reduced temperature. Then with an exactness of 3-4% it holds

$$(1) \qquad \frac{Vv}{v_k^2}\tau^n \simeq 1 ,$$

where for most of the substances it is n = 8, for substances with low boiling temperatures n = 7-6, and for associated substances n = 9 (water, acetic acid) or n = 10 - 11 (alcohols). The formula

$$(2) \qquad \frac{Vv}{v_k^2}\tau^n = 1 + a(\tau_1 - \tau)(\tau_2 - \tau)\sqrt{\frac{1-\tau}{1+\tau}}$$

Card 1/2

APPROVED FOR RELEASE: 06/20/2000 CIA-RDP86-00513R001033420003-5"

"APPROVED FOR RELEASE: 06/20/2000 CIA-RDP86-00513R001033420003-5

The Dependence of the Product of the Specific Volumes SOV/155-59-1-29/30
of the Saturated Steam and the Fluid on the Temperature

is very exact. A table contains the material constants a, τ_1, τ_2, e.g. for isopentane it is $\tau_1 = 0.636$, $\tau_2 = 0.857$, $a = 20.7$.
The author mentions A.I. Bachinskiy, and S.M. Lukomskiy; he thanks Professor K.A. Putilov for advices.
There are 2 figures, 2 tables, and 6 references, 1 of which is Soviet, 3 German, 1 Dutch, and 1 English.

ASSOCIATION: Moskovskiy avtomekhanicheskiy institut (Moscow Automechanical Institute)

SUBMITTED: September 17, 1958 (initially)
February 4, 1959 (after revision)

Card 2/2

APPROVED FOR RELEASE: 06/20/2000 CIA-RDP86-00513R001033420003-5"

"APPROVED FOR RELEASE: 06/20/2000 CIA-RDP86-00513R001033420003-5

MEL'NICHENKO, N.I.

Certain properties of the steam-liquid boundary curve shared by various substances. Inzh.-fiz. zhur. 4 no.6:116-118 Je '61. (MIRA 14:7)

1. Avtomekhanicheskiy institut, Moskva.
(Phase rule and equilibrium)

APPROVED FOR RELEASE: 06/20/2000 CIA-RDP86-00513R001033420003-5"

"APPROVED FOR RELEASE: 06/20/2000 CIA-RDP86-00513R001033420003-5

MEL'NICHENKO, N.I.

New formula describing the pressure of saturated vapor of liquids of different compositions. Inzh.-fiz. zhur. 6 no.7:50-53 Jl '63. (MIRA 16:9)

1. Avtomekhanicheskiy institut, Moskva.
(Vapor pressure)

APPROVED FOR RELEASE: 06/20/2000 CIA-RDP86-00513R001033420003-5"

"APPROVED FOR RELEASE: 06/20/2000 CIA-RDP86-00513R001033420003-5

MEL'NICHENKO, N.I.

Pressure of the saturated steam of deuterium. Teploenergetika 11 no.6:63-64 Je '64. (MIRA 18:7)

1. Moskovskiy avtomekhanicheskiy institut.

APPROVED FOR RELEASE: 06/20/2000 CIA-RDP86-00513R001033420003-5"

"APPROVED FOR RELEASE: 06/20/2000 CIA-RDP86-00513R001033420003-5

L 38113-66 EWT(m)/EWP(t)/ETI IJP(c) JD

ACC NR: AP6012211 SOURCE CODE: UR/0032/66/032/004/0394/0395

AUTHOR: Rigin, V. I.; Mel'nichenko, N. N.

ORG: Siberian State Research and Design Institute for Nonferrous Metallurgy (Sibirskiy gosudarstvennyy nauchno-issledovatel'skiy i proyektnyy institut tsvetnoy metallurgii)

TITLE: Determination of micro amounts of arsenic in metallic silicon and in very pure silicon dioxide

SOURCE: Zavodskaya laboratoriya, v. 32, no. 4, 1966, 394-395

TOPIC TAGS: quantitative analysis, arsenic, silicon, silicon compound

ABSTRACT: The article describes a method based on the electrochemical reduction of arsenic to hydrogen arsenide in an alkaline medium. The method can determine a content of arsenic down to 2×10^{-7} % in a weighed portion of 0.5 grams. The determination is carried out in a special apparatus illustrated in the article. The apparatus consists of a small beaker made of polyfluoroethylene resin. The weighed portion to be analyzed, in the amount of 0.5 grams, is placed in the beaker of the apparatus and, in a water bath, with heating, is dissolved in 20 ml of a 30% solution of NaOH. After complete dissolving, there are added 2 ml

Card 1/2 UDC: 543.7

APPROVED FOR RELEASE: 06/20/2000 CIA-RDP86-00513R001033420003-5"

"APPROVED FOR RELEASE: 06/20/2000 CIA-RDP86-00513R001033420003-5

L 38113-66

ACC NR: AP6012211

of a 3% solution of divalent chromium sulfate, the beaker is closed, a capillary with a paper indicator is inserted, and the current is turned on. Electrolysis is carried on for 45-50 minutes at an electrode voltage of 8 amps. At the end of the electrolysis, the paper indicator is withdrawn and compared with a standard. Experimental results of the method are given in a table. The method was tested by the use of additives consisting of metallic silicon and silicon dioxide with a known sufficiently high arsenic content ($> 1 \times 10^{-3}\%$), which was determined spectrographically and by the hypophosphite method. The total time for a determination by this method is 1.5 hours. Since the determination is carried out in an alkaline medium, the possibility of error due to the presence of traces of arsenic and reagents is excluded. Orig. art. has: 1 figure.

SUB CODE: 07/ SUBM DATE: none/ ORIG REF: 003/ OTH REF: 002

Card 2/2

APPROVED FOR RELEASE: 06/20/2000 CIA-RDP86-00513R001033420003-5"